myprojectorlamps.com

The most trusted, dependable name in projector lamp sales.

http://www.myprojectorlamps.com

http://www.myprojectorlamps.ca

http://www.myprojectorlamps.eu

The following projector manual has not been modified or altered in any way.

Reference Manual

KODAK DP900 / DP1100 Digital Projectors with KODAK Image Manager

PN 010-0210-00 8/99

FCC Warning

This equipment has been tested and found to comply with the limits for a Class A digital device, pursuant to part 15 of the FCC Rules. These limits are designed to provide reasonable protection against harmful interference when the equipment is operated in a commercial environment. This equipment generates, uses, and can radiate radio frequency energy and, if not installed and used in accordance with the instruction manual, may cause harmful interference to radio communications. Operation of this equipment in a residential area is likely to cause harmful interference in which case the user will be required to correct the interference at his own expense.

Canada

This Class A digital apparatus complies with Canadian ICES-003.
Cet appareil numérique de la classe A est conforme à la norme NMB-003 du Canada.

Safety Certifications

UL, CUL, TÜV, NOM

EN 55022 Warning

This is a Class A product. In a domestic environment it may cause radio interference, in which case the user may be required to take adequate measures. The typical use is in a conference room, meeting room or auditorium.

Declaration of Conformity

Manufacturer: Eastman Kodak Company
Rochester, New York 14650 USA

We declare under our sole responsibility that the KODAK DP900/1100 Digital Projector conforms to the following directives and norms:

Directive 89/336/EEC, Amended by 93/68/EEC
EMI: EN 55022 (1992) Class A
EMC: EN 50082-1 (1992)
IEC 801-2, IEC 801-3, IEC 801-4
Directive 73/23/EEC, Amended by 93/68/EEC
Safety: EN 60950: 1992 + A1 + A2 + A3: 1995

July, 1999

Australian Certification C-tick mark

N137

Contents

Safety Instructions 1

Safety Definitions 1
Safety Symbols 1
Safety Terms: 2

Introduction 3

Image Resolution 3
Compatibility 4
Unpacking the Projector 5

Projector Features 6

Front of Projector 6
Rear and Side of Projector 6
Connector Panel 6
Usage Guidelines 7
If You Need Assistance 8
Warranty 10

Setting up the Projector 11

Connecting the Cable Hub Connector 13
Connecting a Video Player 20
Starting the Projector 22
Turning Off the Projector 23

Using the Projector 25

Basic Image Adjustment 25
Using the Remote Control 26
Adjusting the Projector 28
Using the Keypad and Remote Buttons 29
Using the On-Screen Menus 31
Kodak Menu 42

Maintenance & Troubleshooting 45

Cleaning the Lens 45
Replacing the Projection Lamp 46
Replacing the Batteries in the Remote Control 49
Using the Kensington Lock 49
Troubleshooting 50

Appendix A 55

Specifications 55

Appendix B 59

Accessories 59

Appendix C 61

Portable and Laptop Activation Chart 61

Appendix D 71

Using Video Mirroring with a PowerBook Computer 71

Appendix E 73

Projected Image Size 73

Safety Instructions

Please read and follow all safety instructions provided *before* using your new projector. Failure to comply with safety instructions may result in fire, electrical shock, or personal injury and may damage or impair protection provided by equipment. *Please save all safety instructions.*

Safety Definitions

- **Warning:** Statements identify conditions or practices that could result in permanent personal injury.
- **Caution:** Statements identify conditions or practices that could result in damage to your equipment.

Safety Symbols

Attention: For information about use of a feature, please refer to the *Reference Manual*.

Warning: Hot surface. Do not touch.

An arrow pointing to the lamp door on the projector.

Safety Terms:

- **Warning:** Don’t look directly into the lens when the projector is turned on.
- **Warning:** Don’t block ventilation openings.
- **Warning:** To replace the lamp, turn the power off and unplug the power cord. To avoid burns, wait 30 minutes before opening the lamp door. Follow all instructions provided in the *Reference Manual*.
- **Warning:** Please use the power cord provided. Connect the power cord to a receptacle with a protective safety (earth) ground terminal.
- **Warning:** Refer all service to qualified service personnel. Servicing your own projector will void the warranty. See “If You Need Assistance” on page 8 for the customer service contact information.
- **Caution:** Don’t set liquids on the projector. Spilled liquids may damage your projector.
- **Caution:** Don’t place the projector on a hot surface or in direct sunlight.
- **Caution:** Do not drop the projector. Transport the projector in a Kodak-approved case.
- **Caution:** For ceiling mount installations, please use the ceiling mount recommended in the *Reference Guide* and follow all instructions provided with it.
- **Caution:** The projector lamp bulb is pressurized and may rupture after more than 1,000 hours use. Always change the bulb as soon as you notice a decrease in the brightness.

Introduction

The KODAK DP900 /DP1100 Digital Projectors are lightweight multimedia projectors specifically designed for the mobile presenter. They generate crisp, clear images using Digital Light Processing™ (DLP) technology. The projectors are easy to connect, easy to use, and easy to maintain. The soft carry case makes it easy to transport the 7.4 pound projectors. The DP900 has SVGA 800x600 graphics, the DP1100 has XGA 1024x768 graphics. The user interfaces of the two products are identical; information in this User's Guide applies to both products.

Included with the DP900 / 1100 projectors is Kodak's exclusive Image Manager feature. With this feature you can select the image display setting best suited for your specific presentation material and projection environment.

Image Resolution

DP900

The SVGA resolution of the DP900's projected image is 800x600. Screen resolutions between 800x600 and 1024x768 are compressed to 800x600. The DP900 cannot compress screen resolutions above 1024x768. If your computer's screen resolution is higher than 1024x768, reset it to a lower resolution before you connect the projector.

Note: The DP900 automatically expands 640x480 images to 800x600. You can display these images at 640x480 by turning off the Auto Resize feature. See "Auto Resize" on page 35.

DP1100

The XGA resolution of the DP1100's projected image is 1024x768. The DP1100 cannot compress screen resolutions above 1024x768. If your computer's screen resolution is higher than 1024x768, reset it to a lower resolution before you connect the projector.

Note: The DP1100 automatically expands 640x480 and 800x600 images to 1024x768. You can display these images at their original resolutions by turning off the Auto Resize feature. See "Auto Resize" on page 35.

Compatibility

The projector is compatible with a wide variety of computers and video devices, including:

- IBM-compatible computers, including laptops, up to 1024x768 resolution at 75 Hz
- Apple Macintosh and PowerBook computers up to 1024x768 resolution at 75 Hz.
- Most standard VCRs, DVD players, camcorders and laser disc players.

Unpacking the Projector

The projector comes with the items shown in Figure 1. Check to make sure all are included. **Contact your Kodak dealer immediately if anything is missing**.

Note: The contents of your shipping box may vary depending on the projector configuration you've ordered.

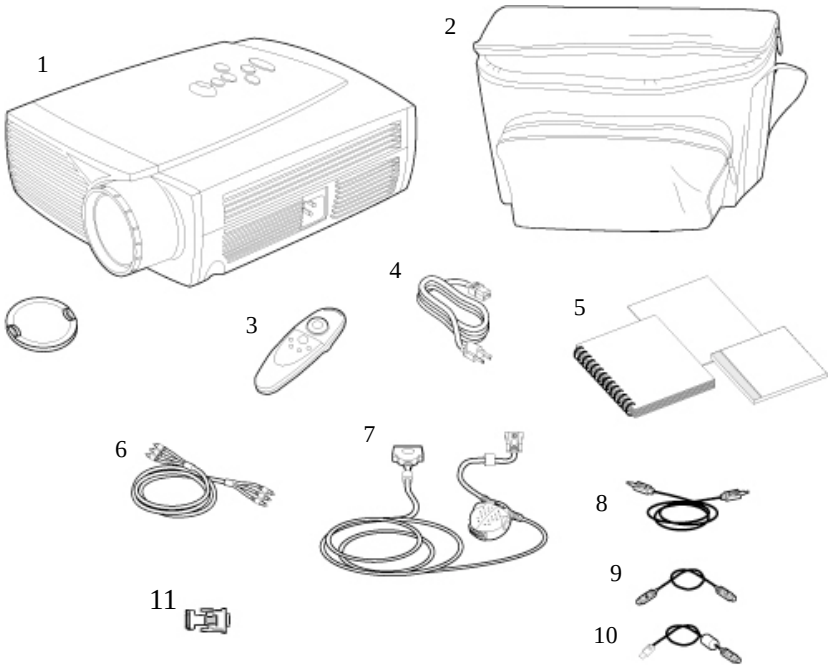

Figure 1 Shipping box contents

1. Digital projector and lens cap
2. Soft carry case
3. Remote control
4. Power cord
5. *DP900 / DP1100 User's Guide, Reference Manual,* and *Online User Guide* CD
6. RCA audio/video cable
7. Cable connector hub
8. Audio cable
9. PS/2 mouse cable
10. USB mouse cable
11. MAC adapter

Projector Features

Front of Projector

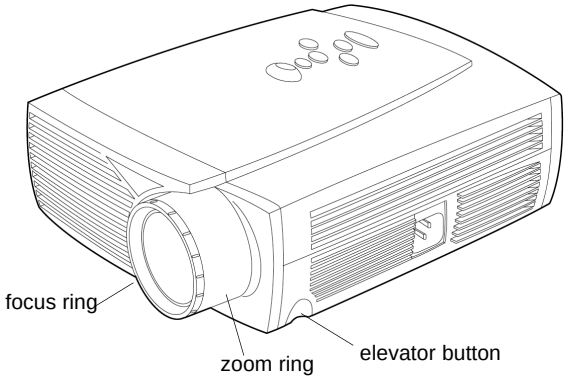

Rear and Side of Projector

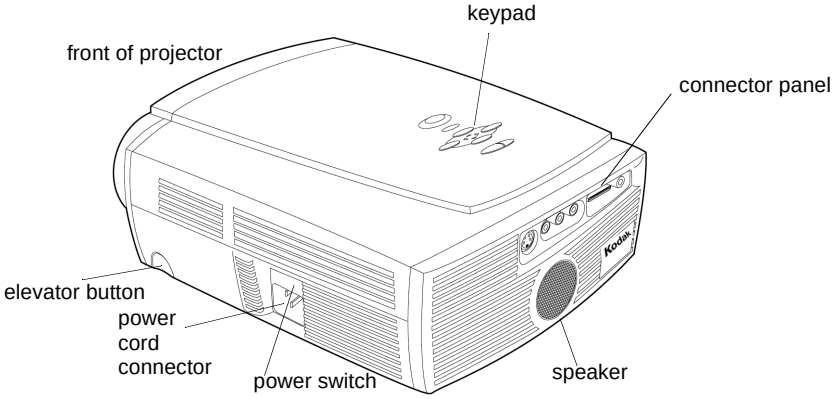

Connector Panel

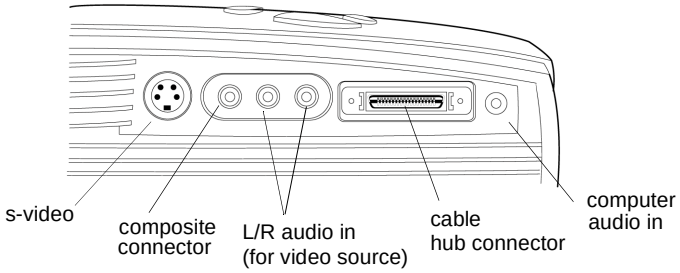

Usage Guidelines

- Do not look directly into the projection lens when the projector is turned on. The bright light may harm your eyes.
- Do not block the grills on the projector. Restricting the air flow can cause it to overheat and turn off. If this happens, you must wait a minute before attempting to turn it back on.
- Handle the projector as you would any product with glass components. Be especially careful not to drop it.
- Avoid leaving the projector in direct sunlight or extreme cold for extended periods of time. If this happens, allow it to reach room temperature before use.
- This projector is not intended for use in mainframe computer rooms as defined in the Standard for the Protection of Electronic Computer/Data Processing Equipment, ANSI/NFPA 75.

If You Need Assistance

The first place to look for help is in “Troubleshooting” on page 50.

Online Services

Contact Kodak via:

World Wide Web	http://www.kodak.com (click on Service and Support)
America Online	(keyword) KODAK
CompuServe	GO KODAK
Kodak Internet List Server	photo-cd@info.kodak.com; or ftp.kodak.com

Faxed Information

Kodak offers automated support by fax:

U.S. and Canada	1-800-508-1531
Europe	44-0-131-458-6962
U.K.	44-0-131-458-6962

Customer Support

If you have questions concerning the operation of your KODAK projector, you can speak directly to a customer support representative. Have the projector serial number ready, and be at your computer with your projector when you call.

In the U.S. and Canada call toll free, 1-888-375-6325, between the hours of 9:00 a.m. and 8:00 p.m. (Eastern Standard Time) Monday through Friday.

In Europe call the Kodak Digital Imaging Support Centre toll free numbers associated with your location, or the U.K. toll line, 44-0-131-458-6714, between the hours of 09.00 and 17.00 (GMT/CET) Monday through Friday.

For other locations call:

Austria/Osterreich	0179 567 357
Germany/Deutschland	069 5007 0035
Spain/Espana	91 749 76 53
Belgium/Belgique	02 713 14 45
Ireland/Eire	01 407 3054
Sweden/Sverige	08 587 704 21
Denmark/Danmark	3 848 71 30
Italy/Italia	02 696 334 52
Switzerland/Schweiz/Suisse	01 838 53 51
Finland/Soumi	0800 1 17056
Netherlands/Nederland	020 346 9372
UK	0870 2430270
France	01 55 1740 77
Norway/Norge	23 16 21 33
1 Int. Fax Line	+44 (0) 131 458 6962

Warranty

This product is backed by a limited two-year warranty. The details of the warranty are printed at the back of this manual. A longer term warranty can be purchased from your Kodak dealer.

Setting up the Projector

If you want to project from behind a translucent screen, set up the projector behind your screen. See “Rear Projection” on page 38 to reverse the image.

If you are installing the projector on the ceiling, refer to the *Ceiling Mount Installation Guide* that comes with the optional Ceiling Mount Kit for more information. To turn the image upside down, see “Ceiling Projection” on page 38. The Ceiling Mount Kit is sold separately.

1. Make sure your projector is on a flat surface. It must be within 10 feet (3 m) of your power source and within 8 feet (2.4 m) of your computer.
2. Make sure the projector and your computer are turned off.
3. Position the projector the desired distance from the screen and adjust the focus ring.
   - The distance from the lens of the projector to the screen and the zoom setting determine the size of the projected image. Figure 2 and Figure 3 show three projected image sizes. For information about image sizes at minimum and maximum zoom settings, see “Projected Image Size” on page 73.

.

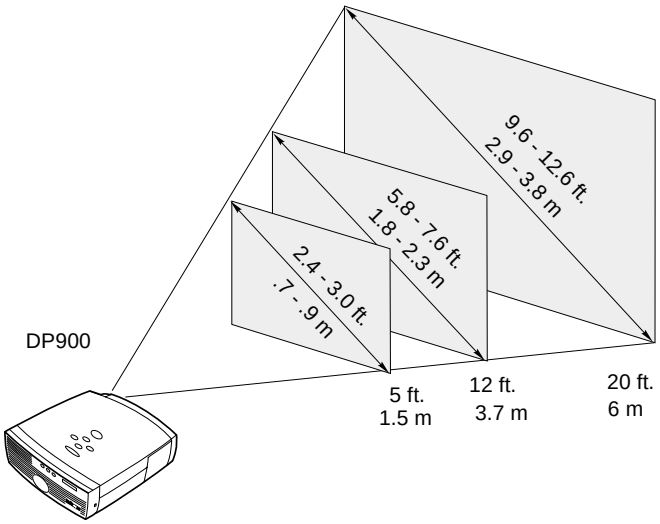

Figure 2 Projected image size for DP900 at minimum focusing distance

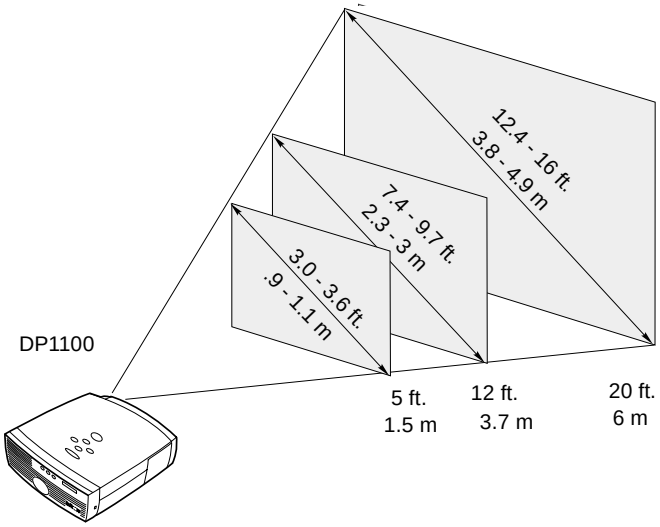

Figure 3 Projected image size for DP1100 at minimum focusing distance

Connecting the Cable Hub Connector

Caution: Turn off the computer, monitor and projector whenever you connect or disconnect cables.

The cable hub connector simplifies the connection process by providing a central hub for all the connections between the projector and your computer. The connectors on the cable hub are labeled with icons. The cable hub also has an LED that lights solid green when the projector is on and the cable hub is functioning properly. A slowly blinking LED indicates that the cable hub is waiting to initialize with the projector; a rapidly blinking LED indicates a problem with the cable hub.

Connect the end of the cable hub to the connector on the projector's connector panel. (Figure 4)

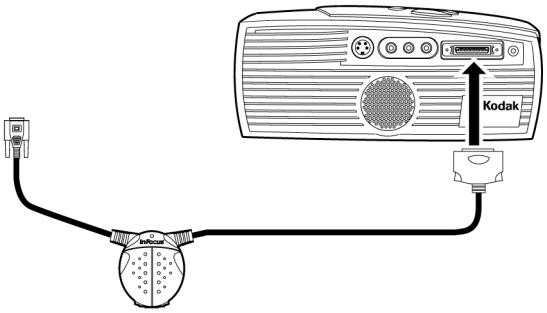

Figure 4 Connecting the cable hub to the projector

Note: In some older computers, the monitor connector does not have a hole for Pin 9. If you have trouble connecting the cable hub to your computer, contact Kodak Support. See "If You Need Assistance" on page 8

Preparing to Connect Your Equipment to the Projector

Note: Before you continue, make sure the projector and your equipment are turned off. If you're connecting a computer, make sure the distance between it and the projector is 10 feet or less.

Now you're ready to connect your equipment. Computers are connected to the cable hub. Video players are connected directly to the projector.

Steps for connecting the different types of equipment are given on the pages listed here..

Equipment you want to connect	Page
Laptop computer with cable hub	page 15
Desktop computer with cable hub	page 17
USB or PS/2 mouse	page 18
Video player	page 20

Note: If you are connecting an older MACINTOSH computer that does not have a 15-pin connector, you must use the MAC adaptor between the computer and the cable hub.

Connecting a Laptop Computer

Note: Many laptop computers do not automatically turn on their external video port when a secondary display device such as a projector is connected. Refer to your computer manual for the command that activates the external video port. Activation commands for some laptop computers are listed in the Appendix C.

1. Plug the ▢ end of the cable hub into the video connector on your laptop.

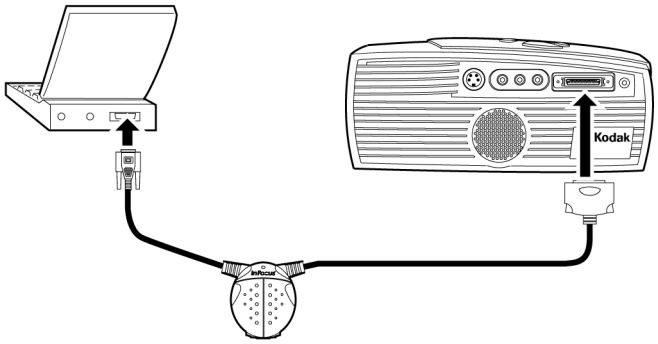

Figure 5 Connecting to a laptop computer

2. Plug either end of the audio cable into the audio connector on your computer.
3. Plug the other end of the audio cable into the 🔊 connector on the cable hub.

Do you want to control the computer's mouse from the projector's remote or keypad?

If your computer has a PS/2 connector, use the PS/2 mouse cable.

Note: If you are connecting an older MACINTOSH computer that does not have a 15-pin connector, you must use the MAC adaptor between the computer and the cable hub.

1. Plug the 🖱 end of the mouse cable into the mouse connector on your computer.
2. Plug the end of the mouse cable into the connector on the cable hub.

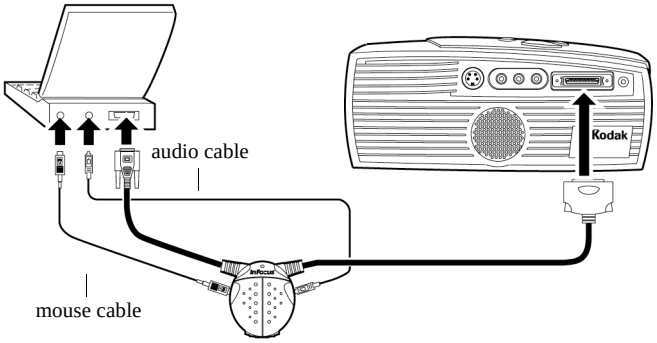

Figure 6 Connecting audio and mouse cables to a laptop computer

If your computer has a USB connector and is running Windows 98, use the USB mouse cable

Note: The USB mouse is supported for use with Windows 98 only.

1. Plug the end of the mouse cable into the mouse connector on your computer.
2. Plug the end of the mouse cable into the connector on the cable hub.

You must have the appropriate USB drivers installed on your computer to use the USB feature. Windows 98 ships with the appropriate drivers.

Note: A USB mouse is hot-pluggable, meaning you do not need to re-boot your computer after connecting the mouse to use it. A PS-2 mouse is not hot-pluggable.

Now you're ready to power up the projector and your laptop. Skip to "Starting the Projector" on page 22.

Connecting a Desktop Computer

1. Locate the cable that connects your monitor to your computer. Unplug it from the computer.

Note: If you are connecting an older MACINTOSH computer that does not have a 15-pin connector, you must use the Mac adaptor between the computer and the cable hub.

2. Plug the end of the cable hub into the monitor connector on your computer.

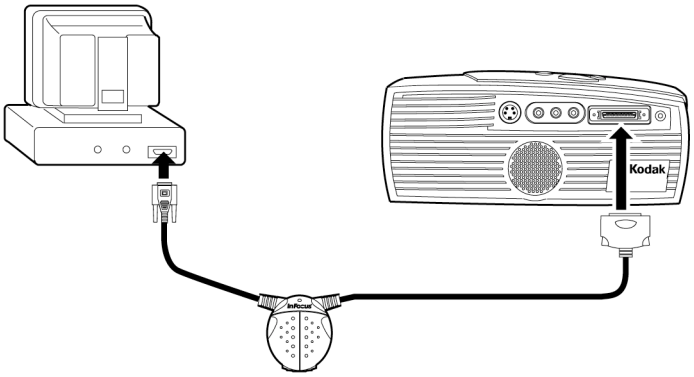

Figure 7 Connecting to a desktop computer

Do you want to display the image on your computer's monitor as well as on the projection screen?

Note: The projector must be turned on to display the image on your monitor.

1. Plug your monitor's cable into the connector on the cable hub.

Do you want to play your computer's audio on the projector?

1. Unplug the audio cable, if present, from your computer.
2. Plug either end of the audio cable into the audio connector on your computer.
3. Plug the other end of the audio cable into the connector on the cable hub.

Do you want to control your computer's mouse from the projector's remote or keypad?

If your computer has a PS/2 connector, use the PS/2 mouse cable.

1. Unplug the mouse cable from your computer.

   Note: A USB mouse is hot-pluggable, meaning you do not need to re-boot your computer after connecting the mouse to use it. A PS-2 mouse is not hot-pluggable.

2. Plug the end of the mouse cable into the mouse connector on your computer.

3. Plug the end of the mouse cable into the connector on the cable hub.

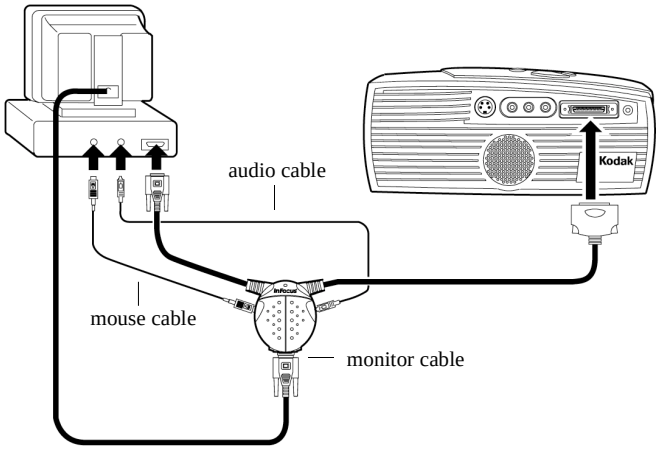

Figure 8 Connecting monitor, audio and mouse cables to a desktop computer

If your computer has a USB connector and is running Windows 98, use the USB mouse cable.

Note: The USB mouse is supported for use with Windows 98 only.

1. Plug the end of the mouse cable into the mouse connector on your computer.
2. Plug the end of the mouse cable into the connector on the cable hub.

You must have the appropriate USB drivers installed on you computer to use the USB feature. Windows 98 ships with the appropriate drivers.

Now you're ready to power up the projector and your computer. Skip to "Starting the Projector" on page 22.

Connecting a Video Player

1. If your video player uses a round, one-prong composite video connector, you'll need only the A/V cable that shipped with the projector.
   - If your video player uses a round, four-prong S-video connector, you'll need an S-video cable in addition to the A/V cable. The S-video cable is sold separately.
2. Plug the A/V cable's yellow connector into the "video-out" port on your video player (Figure 9). This port may be labeled "To Monitor."
   - If you're using an S-video cable, connect it to the "s-video out" connector on the video player (Figure 9).
3. Plug the other yellow connector into the composite connector on the back of the projector.
   - If you're using S-video, plug the other end of the cable into the "s-video" connector on the projector (Figure 9).

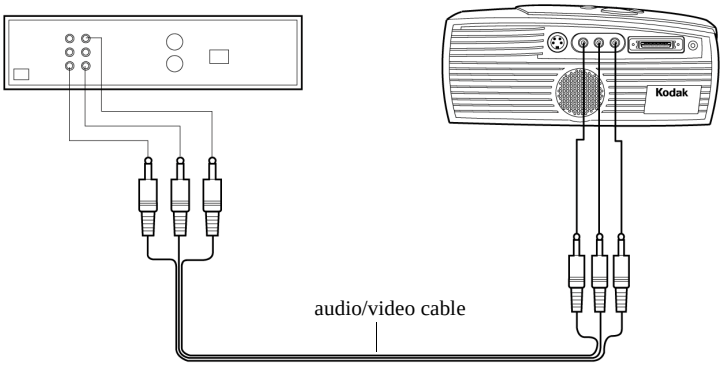

Figure 9 Connecting with the standard A/V cable

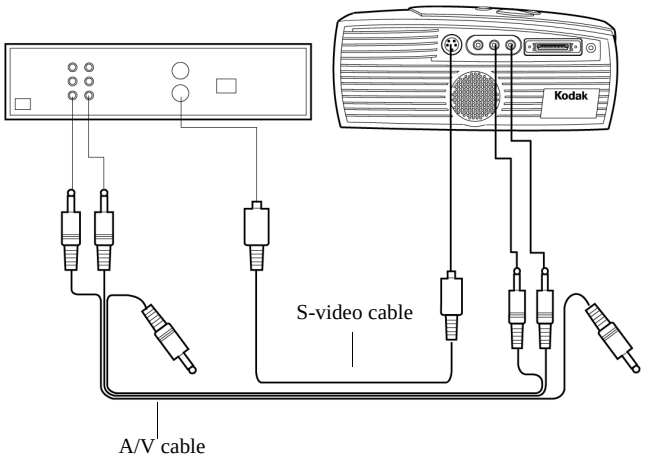

Figure 10 Connecting with an S-video cable

4. Plug the A/V cable's white connector into the left "audio out" port on your video player. Plug the cable's red connector into the right "audio out" port on the video player (Figure 9 and Figure 10).

Caution: Your video player may also have a "Video Out" port for a coaxial cable connection. DO NOT use this to connect to the projector.

- If you're using an S-video cable, the yellow connectors on the A/V cable remain unused (Figure 10).

5. Plug the A/V cable's other white and red connectors to the left and right "audio in" ports on the projector.

The projector is compatible with these major broadcast video standards: NTSC, NTSC 4.43, PAL, PAL-M, PAL-N, and SECAM. It automatically adjusts to optimize its performance for the incoming video. The input signals for SECAM, PAL-M, and PAL-N video are similar to other video signals and cannot be automatically detected, therefore they must be chosen manually. See "Video Standard" on page 37 for details.

Starting the Projector

Note: Always use the power cord that shipped with the projector.

1. Remove the lens cap.
2. Plug the power cord into the side of the projector, then plug it into your electrical outlet. A surge-protected power strip is recommended.
3. Turn on the projector by pressing the “I” side of the power switch.
   - The Kodak startup screen appears and the Power LED on top of the projector lights up.
4. If you connected a video player, turn it on.
   - The video image should display on the projection screen. If a computer source is active, press the button on the keypad (page 30) or the button on the remote to display your video image. You can select a default source to determine which source the projector examines first during power-up for active video; see “Default Source” on page 38.
   - Use the buttons to adjust the volume.
5. Turn on your computer.
   - The computer image should display on the projection screen. (If a video source is active, press the button on the keypad (page 30) or the button on the remote to display your computer’s image.)

Note: With some computers, the order in which you power up the equipment is very important. Most computers should be turned on last, after all other peripherals have been turned on. Refer to your computer’s documentation to determine the correct order.

- If necessary, make adjustments to the image from the projector’s on-screen menus. To open the menus, press the button on the keypad or remote, then select the Display or Image sub-menu. For more information about the menus, see “Using the On-Screen Menus” on page 31.

Turning Off the Projector

If you want to turn off the projector for a short period of time, press the ⏻ button on the keypad or remote. This blanks the screen for fifteen minutes, but keeps the projector running. (You can change the amount of time the projector stays in standby mode; see “Standby Time” on page 38 for details.) After 15 minutes, the lamp goes out (the projector keeps running). To exit standby mode, press the ⏻ button again. (It may take several seconds for the projection lamp to reach full power and project the image again.)

To completely power off the projector, press the “O” side of the power switch on the side of the projector. If you want to turn the projector back on immediately, you must allow about a minute for the lamp to cool. The lamp won’t light if it’s too hot.

Caution: When you disconnect the projector after you have switched it off, always remove the power cord from the electrical outlet first, then remove it from the projector.

Using the Projector

This section describes how to use and make adjustments to the projector. It also provides a reference to the keypad and remote buttons and the options available from the on-screen menus.

Basic Image Adjustment

1. Make sure you have powered up your equipment in the right order (page 22).
2. If the image doesn't display completely, zoom the image (page 28), adjust the height of the projector (page 28) or center the image by adjusting its horizontal or vertical position (page 36). Be sure the projector is at a 90 degree angle to the screen.
3. If the image is out of focus, rotate the focus lens (page 28).
4. If the image appears to shimmer or if it has blurry vertical bars after you have adjusted the focus, turn Auto Image (page 35) off and then back on to reset the automatic sync and tracking. If that doesn't clear up the image, turn Auto Image off and adjust the sync (page 36) and/or the tracking (page 36) manually.
5. If the colors don't look right, scroll through the KODAK Image Manager settings. See "Kodak Menu" on page 42

   Or

   Adjust the brightness (page 32).

Using the Remote Control

Point the remote control at the projection screen or at the front or rear of the projector. The range for optimum operation is about 40 feet. If you point the remote at the projection screen, the distance to the screen and back to the projector must be less than or equal to 40 feet. For best results, point the remote directly at the projector.

The projector ships with a remote that has four function buttons, a disk mouse and two mouse buttons, one on the top of the remote and one on the bottom.

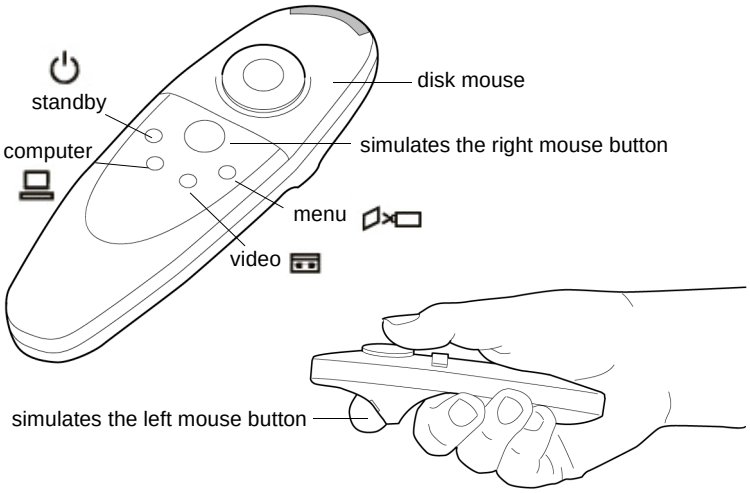

Figure 11 Remote control

Press anywhere on the edge of the disk mouse to move the cursor on the screen. You can move the cursor at any angle by pressing the corresponding edge of the disk. The mouse button on the top of the remote simulates your computer's right mouse button; the button on the bottom simulates your computer's left mouse button. See "Using the Keypad and Remote Buttons" starting on page 29 for a description of the four function buttons.

Note: To control the computer's mouse from the projector's remote or keypad, you must connect the mouse cable to the cable hub.

If you are creating presentations in MICROSOFT® PowerPoint®, you can use the remote's mouse buttons to navigate through your presentation while in Slide Show mode. To configure PowerPoint for this, choose Options from the Tools menu, click the View Tab, de-select the "Popup Menu on Right Mouse Click" option in the Slide Show section, then click OK. Then, when you're in PowerPoint's Slide Show mode, a left click advances to the next slide and a right click returns to the previous slide (other PowerPoint modes are not affected).

Adjusting the Projector

To focus the image, rotate the focus ring (Figure 12) until the image is clear. To zoom the image, rotate the zoom ring. This adjusts the image size without affecting focus.

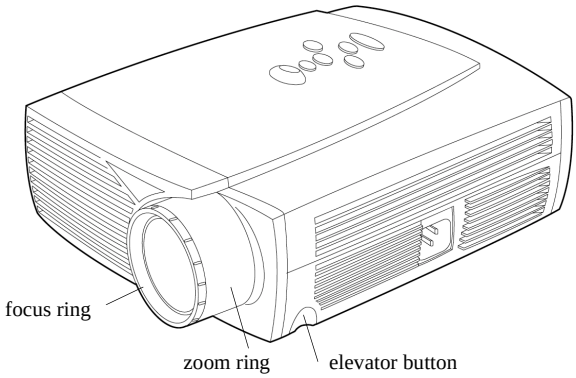

Figure 12 Focus ring, zoom ring, and elevator button

The projector is equipped with a self-locking, quick-release elevator foot and button (Figure 13).

To raise the projector:

1. Press and hold the elevator button (Figure 13).
2. Raise the projector to the height you want, then release the button to lock the elevator foot into position.

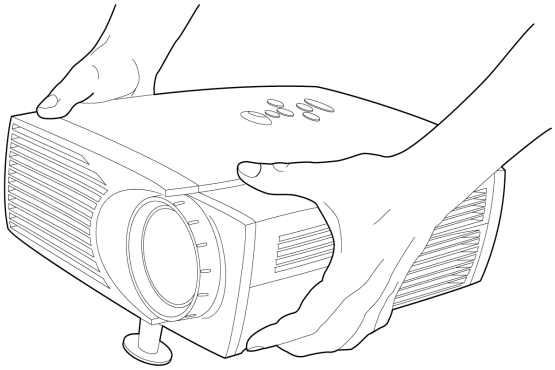

Figure 13 Adjusting the height of the projector

Using the Keypad and Remote Buttons

The keypad is lit orange when the projector is on and lit green while the menus are displayed. While the menus are displayed, the volume, source, and standby buttons act as navigation buttons. See “Using the On-Screen Menus” on page 31 for details.

.

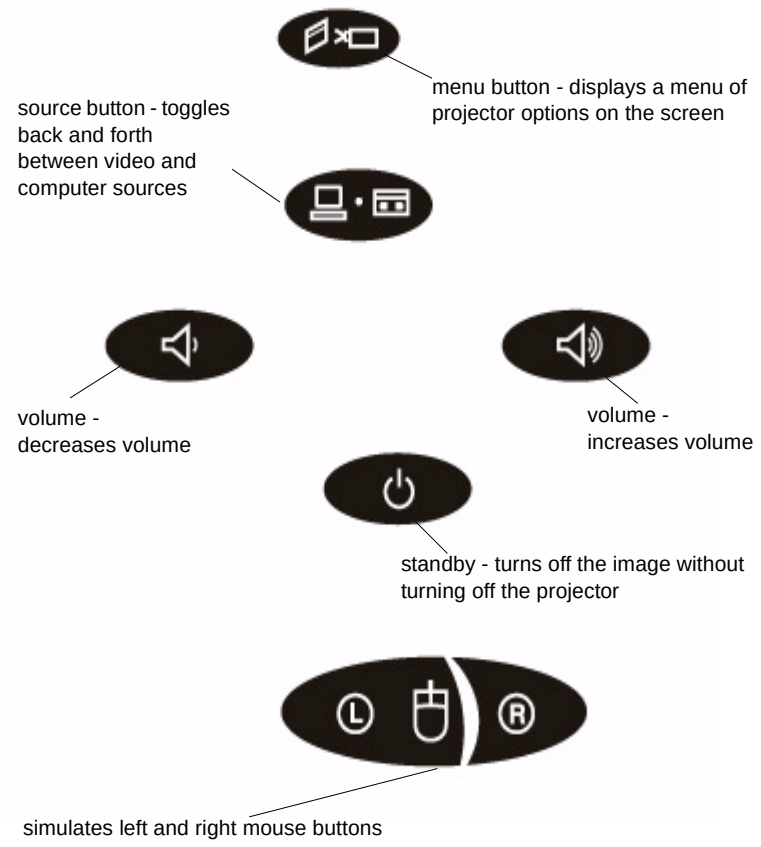

Figure 14 Keypad

Menu

Press to open the on-screen menus (the keypad lights green). Press again to close the menus. When you close the menus, the projector saves any changes you made. For more information about the on-screen menus, see page 31.

Mouse buttons

Use the left and right mouse buttons to make selections and adjustments in the menus. See “Using the On-Screen Menus” on page 31 for details.

Source (keypad only) or Computer and Video (remote only)

When you have more than one source (computer and video) connected to the projector, select between them by pressing the source button on the keypad or the Computer or Video button on the remote.

Standby

When you press , the display and audio turn off and a blank screen is displayed for 15 minutes. You can change the amount of time the projector stays in standby mode; see “Standby Time” on page 38 for details.

- If you press again within 15 minutes, the projector returns to normal operations immediately.
- If you press again after 15 minutes, there is about a 30 second delay before the lamp turns back on.
- If you don’t press again, the lamp turns off after 15 minutes.

Volume (keypad only)

- To increase the volume, press
- To decrease the volume, press

Volume adjustments are saved for each source connected.

Using the On-Screen Menus

The projector has seven drop-down menus that allow you to make image adjustments and change a variety of settings. Most of these adjustments aren't available directly from the keypad.

Note: Some menu items may be grayed out at certain times. This indicates that the item is not applicable to your setup (for example, video standards do not apply to computer sources) or the item is not enabled until another selection is made (for example, Manual Tracking is not available until Auto Image is turned off).

To open the on-screen menus, press the button on the keypad or remote. This changes the volume, source, and standby buttons on the keypad to menu navigation buttons (and illuminates the keypad green). Press the corresponding buttons to move the cursor up, down, left, or right, or use the disk mouse on the remote. To select a menu, move the cursor left and right to highlight the menu you want. The drop-down menu appears.

Figure 15 Drop-down menu

To change a menu setting, use the up and down arrow keys on the keypad or the disk mouse on the remote to move the cursor up and down to the item you want to change (the selected item is highlighted red), then use the left and right mouse buttons (not the left and right arrow buttons) to adjust a setting. Some submenus, such as Brightness, consist of a slider bar you use to increase or decrease a value. Some submenus, such as Standby Time, consist of options you scroll through to select the desired one. All changes are saved when you close the menus. To access another menu, use the left and right arrow buttons or the disk mouse to move left or right to another menu.

Display Menu

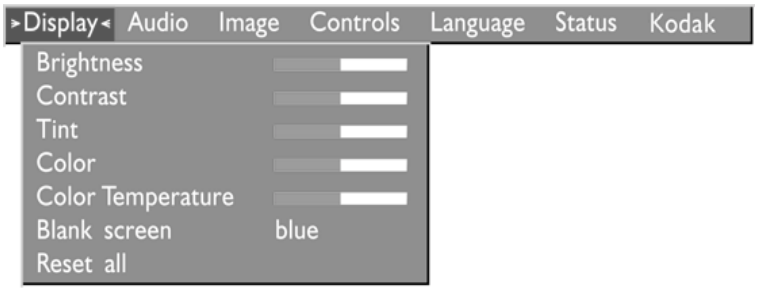

Figure 16 Display menu

Brightness

Adjusting the brightness changes the intensity of the image.

- Press the left mouse button to darken the image.
- Press the right mouse button to lighten the image.

Tint

The tint adjusts the red-green color balance in the projected image. Changing the Tint setting has no effect on PAL or SECAM video sources.

- Press the left mouse button to increase the amount of green in the image.
- Press the right mouse button to increase the amount of red in the image.

Contrast

The contrast controls the degree of difference between the lightest and darkest parts of the picture. Adjusting the contrast changes the amount of black and white in the image.

- Press the left mouse button to decrease the contrast.
- Press the right mouse button to increase the contrast, making the blacks appear blacker and the whites appear whiter.

Color

The color setting adjusts a video image from black and white to fully saturated color.

- Press the left mouse button to decrease the amount of color in the image.
- Press the right mouse button to increase the amount of color in the image.

Blank Screen

Blank Screen determines what color is displayed when there is no active source and when the projector is in standby. Click either mouse button to toggle between blue and black.

Reset All

Click either mouse button to reset all the options (except Language, Video Standard, Ceiling and Rear Projection, and Standby Time) in all the menus to their original settings. This also returns Freeze and Mute to their default (off) settings.

Audio Menu

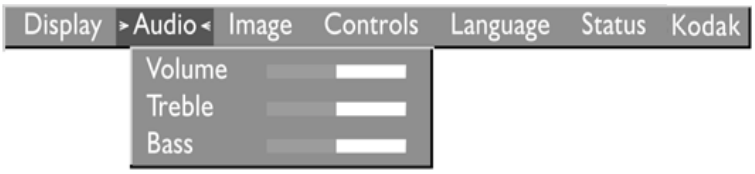

Figure 17Audio menu

Volume

Note: Changing the volume from the menu is the same as changing it using the keypad.

- Press the left mouse button to decrease the volume.
- Press the right mouse button to increase the volume.

Volume adjustments you make are saved for each source.

Treble

The treble setting controls the high frequencies of your audio source.

- Press the left mouse button to decrease the treble.
- Press the right mouse button to increase the treble.

Treble adjustments are saved for each source you have connected.

Bass

The bass setting controls the low frequencies of your audio source.

- Press the left mouse button to decrease the bass.
- Press the right mouse button to increase the bass.

Bass adjustments are saved for each source you have connected.

Image Menu

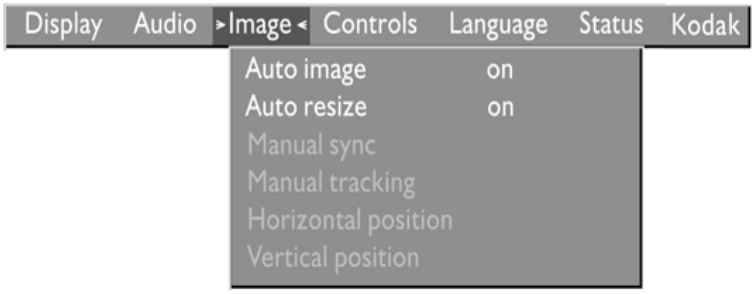

Figure 18 Image menu

Auto Image

Note: Some screen savers interfere with the operation of Auto Image. If you're experiencing problems, try turning your screen saver off, then turning Auto Image off and back on.

The projector automatically adjusts tracking, signal synchronization and vertical and horizontal position for most computers (Auto Image does not apply to video sources). If you want to adjust these features manually, you must turn off **Auto Image** first by highlighting Auto Image in the Image menu and clicking either mouse button to select "off".

Auto Resize

Auto Resize automatically resizes the image by scaling it up or down. It only affects computer images that are not the projector's native resolution.

When **Auto Resize** is on, the projector makes the best fit of the image to the screen. If you turn **Auto Resize** off (by highlighting it in the Image menu and clicking either mouse button to select "off"), the image may be either cropped or too small for the screen.

Manual Sync

The projector adjusts signal synchronization automatically for most computers. But if the projected computer image looks fuzzy or streaked, try turning **Auto Image** off then back on again. If the image still looks bad, try adjusting the signal synchronization manually:

1. Turn Auto Image off.
2. Highlight Manual sync, then press either mouse button repeatedly until the image is sharp and free of streaks.

Manual Tracking

The projector adjusts tracking automatically to match the video signal from your computer. However, if the display shows evenly spaced, fuzzy, vertical lines or if the projected image is too wide or too narrow for the screen, try turning **Auto Image** off then back on again. If the image is still bad, try adjusting the tracking manually:

Note: The **Manual Sync**, **Manual Tracking**, **Horiz. Position** and **Vert. Position** options are available only for computer sources. The projector sets these options automatically for a video source.

1. Turn Auto Image off.
2. Highlight Manual tracking, then press either mouse button repeatedly until the fuzzy vertical bars are gone.

Positioning adjustments are saved when you power off the projector.

Horizontal position

Follow these steps to manually adjust the horizontal position:

1. Turn Auto Image off.
2. Highlight Horizontal position, then press the left mouse button to move the image right or press the right mouse button to move the image left.

Positioning adjustments are saved when you power off the projector.

Vertical position

Follow these steps to manually adjust the vertical position.

1. Turn Auto Image off.
2. Highlight Vertical position, then press the left mouse button to move the image down or press the right mouse button to move the image up.

Positioning adjustments are saved when you power off the projector.

Controls Menu

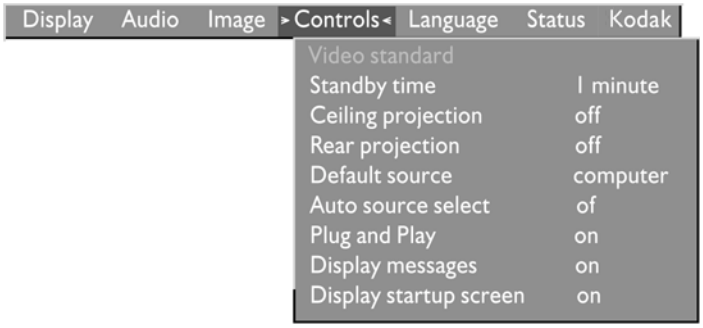

Figure 19 Controls menu

Video Standard

Note: If you already know the video standard used in your geographical area, it's often best to manually select it.

When Video standard is set to Auto, the projector attempts to pick the video standard (NTSC, NTSC 4.43, PAL, PAL-M, PAL-N, or SECAM) automatically based on the input signal it receives. (The video standard options may vary depending on your region of the world.) The input signals for SECAM, PAL-M, and PAL-N video cannot be automatically detected, therefore they must be chosen manually. If the projector is unable to detect the correct standard, the colors might not look right or the image might appear "torn." If this happens, manually select a standard by clicking either mouse button and cycling through the standards.

Standby Time

This option lets you select how long the lamp stays on and the blank screen is displayed when the projector enters standby mode before the projector turns off. Select among 1, 5, 10, and 15 minutes and 1 and 2 hours by clicking either mouse button and cycling through the options.

Ceiling Projection

Note: To order the Ceiling Mount Kit, refer to “Optional Accessories” on page 60.

When you turn **Ceiling Projection** on, the projector turns the image upside down for ceiling-mounted projection. Highlight Ceiling Projection, then click either mouse button to turn this feature on and off.

Rear Projection

When you turn **Rear Projection** on, the projector reverses the image so you can project from behind a translucent screen. Highlight Rear Projection, then click either mouse button to turn this feature on and off.

Default Source

Default Source toggles between Computer and Video. This determines which source the projector checks first for active video during power-up. Highlight Default Source and click either mouse button to toggle between the options.

Auto Source Select

This setting toggles between On and Off. When this feature is Off, the projector defaults to the source selected in Default Source. To display another source, you must manually select one by pressing the button on the keypad. When this feature is On, the projector automatically finds the active source, checking the default source first. Highlight Auto Source Select and click either mouse button to turn this feature on and off.

Plug and Play

This setting toggles between On and Off. When it is On, most new computers will automatically recognize the projector, then set the monitor resolution and refresh rate accordingly. You need to set the Plug and Play setting to Off for the projector to display properly on some older computers. The Plug and Play setting does not affect video images.

If the projector's display constantly changes between the computer image and the message, "Perfecting the image", you may need to set Plug and Play to Off.

Display Messages

This setting toggles between On and Off. When this feature is On, status messages such as "No signal detected" or "Standby Active" appear in the lower-right corner of the screen. Click either mouse button to turn this feature off and not see status messages.

Display Startup Screen

This setting toggles between On and Off. When this feature is On, the Kodak startup screen appears when the projector starts up and remains until an active source is detected. Click either mouse button to turn this feature off and display a plain black or blue screen instead of the startup screen.

Language Menu

Figure 20 Language menu

You can display the on-screen menus in English, French, German, and Spanish.

- Move the cursor to the language you want, then click either mouse button. The menus redraw immediately.

Status Menu

This is a read-only window for informational purposes. To display the status window, select Show status from the menu, then click either mouse button. To remove the window, click either mouse button.

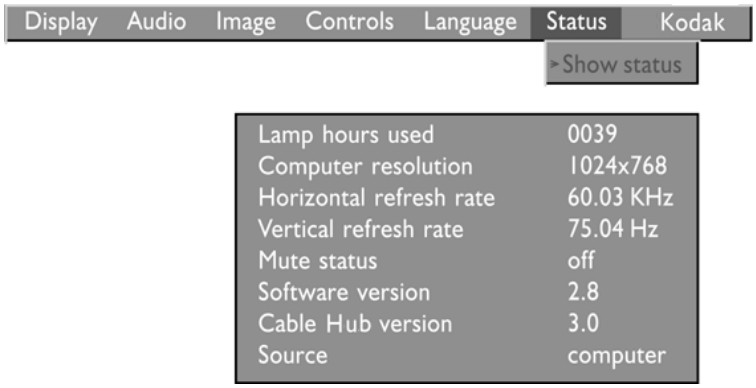

Figure 21 Status menu

Lamp hours used

Indicates how many hours the current lamp has been in use. The counter starts at zero hours and counts each hour the lamp is in use. Change the bulb when the brightness is no longer acceptable. See “Replacing the Projection Lamp” on page 46 for details.

Computer resolution

Shows your computer’s resolution setting. To change this, go to your computer’s Control Panel and adjust the resolution in the Display tab. See your computer’s user’s guide for details.

Horizontal refresh rate

The time period that one horizontal line is displayed.

Vertical refresh rate

The time period that one video frame is displayed.

Mute status

Indicates if the audio is muted.

Software version

Indicates the projector’s software version. This information is useful when contacting Technical Support.

Cable Hub version

Indicates the Cable Hub’s software version. This information is useful when contacting Technical Support.

Source

Indicates the active source, Computer or Video.

Kodak Menu

Kodak's exclusive Image Manager feature allows you to select the image display setting best suited for your specific presentation material and projection environment.

.

Image Manager Settings

Photo-PC Setting matches the higher contrast found on a standard PC monitor. This option is best for:

- images created on a PC
- images from a KODAK digital camera
- a starting point for composite or S-video inputs.

Photo-Mac Photo matches the lower contrast found on a standard MACINTOSH monitor. It is generally used for images created on or for a MACINTOSH. This setting also works well with a PC if you are using higher than normal contrast PC images.

Spreadsheets results in an image with contrast between a PC and MACINTOSH monitor. It is generally used for text-rich tables, such as financial displays. This setting factors in ambient light, subject matter, and personal preferences to deliver the right balance of contrast and brightness.

Graphics delivers the maximum brightness and high contrast needed to project graphics and text against solid colored backgrounds.

Rich Colors results in an image with deep contrast and saturated vibrant colors. It is generally used under bright lighting conditions. This setting works well to enhance colors of certain graphics and it may be useful when images created for a MACINTOSH are displayed from a PC.

Using the Image Manager

1. Click the Kodak menu.
2. Select the setting best suited for your presentation material and environment.

   The new contrast setting is immediately applied to the image.
3. Click OK to save the setting as your default Image Manager setting for the current and future presentations.

Maintenance & Troubleshooting

This section describes how to:

- clean the lens
- replace the projection lamp
- replace the batteries in the remote
- use the Kensington lock feature
- troubleshoot the projector

Cleaning the Lens

Follow these steps to clean the projection lens:

1. Apply a non-abrasive camera lens cleaner to a soft, dry cloth.
   - Avoid using an excessive amount of cleaner.
   - Abrasive cleaners, solvents or other harsh chemicals might scratch the lens.
2. Lightly wipe the cleaning cloth over the lens.
3. If you don’t intend to use the projector immediately, replace the lens cap.

Replacing the Projection Lamp

Caution: To avoid burns, allow the projector to cool for at least 30 minutes before you open the lamp module door. Never extract the lamp module while the lamp is operating.

Caution: The projector lamp bulb is pressurized and may rupture after more than 1,000 hours use. Always change the bulb as soon as you notice a decrease in the brightness.

The lamp hour counter in the Status menu counts the number of hours the lamp has been in use. The projector uses a metal halide bulb. These types of bulbs deteriorate over time. Replace the lamp when the brightness is no longer acceptable. You can order new lamp modules from your Kodak dealer. See “Optional Accessories” on page 60 for information.

Follow these steps to replace the projection lamp:

1. Turn off the projector and unplug the power cord.
2. Wait 30 minutes to allow it to cool thoroughly.
3. Place the projector on its side, then insert a small screwdriver or other flat object into the tabs on the lamp module door (Figure 22).
4. Pull the lamp door up and remove it.

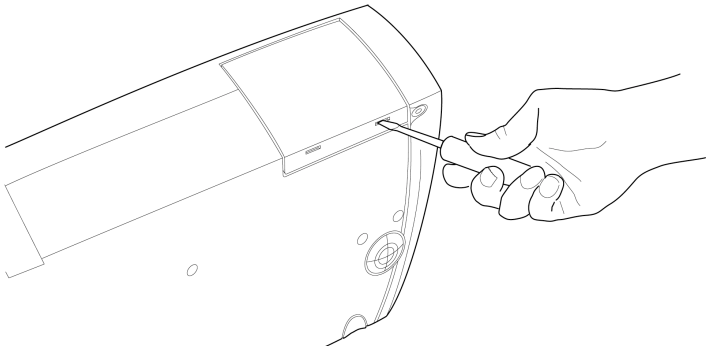

Figure 22 Removing the lamp door

Caution: Never operate the projector with the lamp door open or removed. This disrupts the air flow and causes the projector to overheat.

5. Loosen the two non-removable screws on the outside of the module.

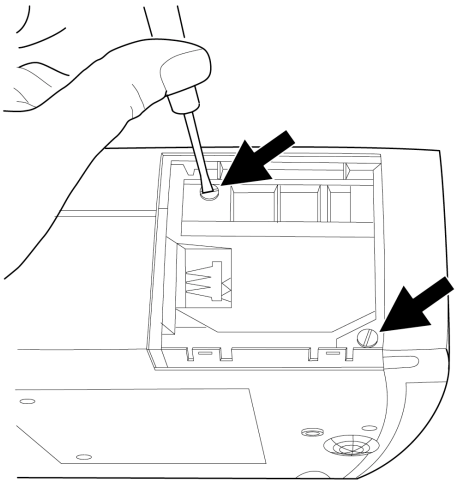

Figure 23 Loosening the screws on the lamp module

6. Slide the lamp connector to the right to disconnect it from the projector (Figure 24).

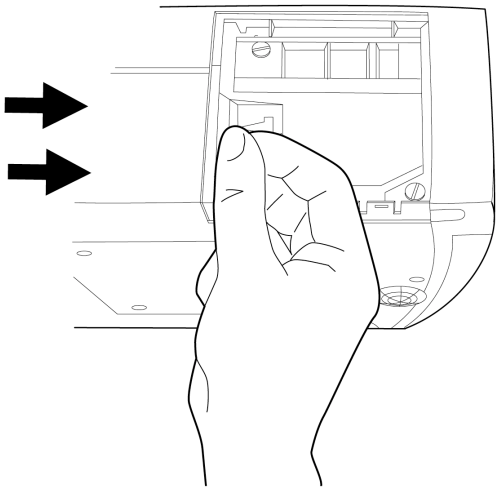

Figure 24 Sliding the lamp connector

7. Remove the module (Figure 25).

Caution: Do not drop the lamp module or touch the glass bulb! The glass may shatter and cause injury.

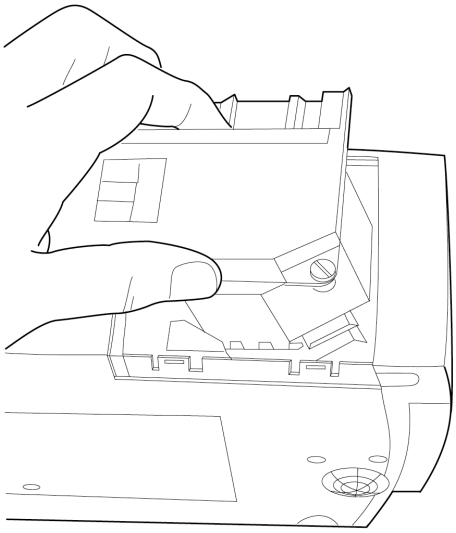

Figure 25 Removing the lamp module

8. Align the new lamp module in the correct direction.
9. Gently push the module in as far as it goes.
10. Tighten the screws on the outside of the module.
11. Slide the lamp connector to the left to re-attach it.
12. Insert the tabs at the top of the lamp door into the projector and press the lamp door into place.
13. Plug in the power cord and turn the projector back on.
14. To reset the lamp hour counter in the Status window, press and hold the left mouse button, then press the menu button (while still holding down the mouse button) for 5 seconds. Verify that the counter was reset by pressing the menu button and viewing the counter in the Status window.

Replacing the Batteries in the Remote Control

The life of the batteries depends on how often and how long you use the remote. Symptoms of low battery charge include erratic responses when using the remote and a reduced range of operation.

Follow these steps to replace the batteries:

1. Turn the remote face down in your hand.
2. Slide the battery cover off the end of the remote by pressing on it with the heel of your hand.
3. Remove the old batteries.
4. Install two new AAA alkaline batteries. Make sure you install each battery in the correct direction.
5. Slide the battery cover back on the remote.

Using the Kensington Lock

The projector has a Kensington Security Standard connector for use with a Kensington MicroSaver Security System (Figure 26). Refer to the information that came with the Kensington System for instructions on how to use it to secure the projector.

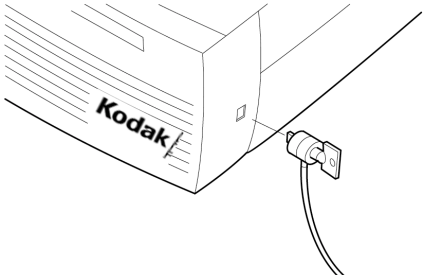

Figure 26 Installing the Kensington lock

Troubleshooting

Problem: Nothing on projection screen

- Make sure that the power cord is properly connected to a fully functional AC electrical outlet. Make sure that the power cord is also properly connected to the projector.
- If the projector is plugged into a power strip, make sure the power strip is turned on.
- Make sure you have removed the lens cap on the projection lens at the front of the projector.
- Make sure the projector is switched on.
- Check the projector's lamp to ensure that it is securely connected in the lamp module. See "Replacing the Projection Lamp" on page 46.
- Make sure that the cables do not have any bent pins.

Problem: Color or text not being projected

- You might need to adjust the brightness up or down until the text is visible. Refer to "Brightness" on page 32 for more information.

Problem: The screen resolution is not right

- Make sure the computer's video card is set for a resolution of no greater than 1024x768.

Problem: Image isn't centered on the screen

- Reposition the image. Refer to "Horizontal position" on page 36 and "Vertical position" on page 37.
- Be sure the projector is at a 90 degree angle to the screen.

Problem: Only the start-up screen displays

- Verify that the cables are connected correctly. See page 13 through page 20 for connection procedures.
- Verify that the proper input source is connected. See "Source (keypad only) or Computer and Video (remote only)" on page 30.
- You might need to turn everything off and power up the equipment again in the proper order. Refer to your computer's documentation to determine the correct order.
- Make sure your laptop's external video port is turned on. See the "Using Video Mirroring with a PowerBook Computer" on page 71 or your computer's manual for details.
- Make sure your computer's video board is installed and configured correctly.

If you're using Windows 3.x:

1. In the Windows Program Manager, double-click the Windows Setup icon in the Main program group.
2. Verify that the Display setting is 1024x768 or less.

If you're using Windows 95:

1. Open the "My Computer" icon, the Control Panel folder, and then the Display icon.
2. Click the Settings tab.
3. Verify that the Desktop area is set to 1024x768 or less.
4. Also check the following:
   - Does your computer have a compatible video board? The projector isn't CGA or EGA compatible.
   - Is your computer's video port activated? This is especially true for laptop computers. See "Portable and Laptop Activation Chart" on page 61.

Problem: Image is too wide or narrow for screen

- You might need to manually adjust the tracking to reduce or enlarge the projected image. Refer to “Manual Tracking” on page 36.
- Adjust the resolution of your video card if it’s greater than 1024x768.

Problem: Image is out of focus

- Turn the projection lens to focus the image.
- Make sure the projection screen is at least 5 feet (1.5 m) from the projector.
- Check the projection lens to see if it needs cleaning.

Problem: Image and menus are reversed left to right

- Rear projection mode is probably turned on. Turn Rear Projection off in the Controls menu. The image should immediately return to forward projection. See “Rear Projection” on page 38.

Problem: the projector displays vertical lines, “bleeding” or spots

- Adjust the brightness. See “Brightness” on page 32.
- Check the projection lens to see if it needs cleaning.

Problem: no sound

- Adjust volume.
- Verify audio/input connections.
- Adjust audio source.

Problem: Image is “noisy” or streaked

Try these steps in this order.

1. Deactivate the screen saver on your computer.
2. Turn **Auto Image** off and then back on again. See “Auto Image” on page 35.
3. Adjust the synchronization and tracking manually to find an optimal setting. See “Manual Sync” on page 36 and “Manual Tracking” on page 36.
   - The problem could be with your computer’s video card. If possible, connect a different computer.

Problem: Projected colors don’t match the computer or video player’s colors

Just as there are differences in the displays of different monitors, there are often differences between the computer image and the projected image.

- Adjust the colors using the KODAK Image Manager. See “Kodak Menu” on page 42.
- Adjust the brightness, tint and/or contrast from the Display menu. See “Brightness” on page 32, “Tint” on page 32 and “Contrast” on page 33.

Problem: Lamp seems to be getting dimmer

- The lamp begins to lose brightness when it has been in use for a long time. Replace the lamp as described in “Replacing the Projection Lamp” on page 46.

Problem: Lamp shuts off

- A minor power surge may cause the lamp to shut off. Turn the projector off, wait at least a minute, then turn it back on.

To contact Kodak support see “If You Need Assistance” on page 8.

Appendix A

Specifications

The projectors must be operated and stored within the temperature and humidity ranges specified.

Temperature

Operating	50 to 104° F (10 to 40° C)
Non-operating	-4 to 158° F (-20 to 70° C)

Humidity

Operating and non-operating	10% to 95% relative humidity, non-condensing

Dimensions

3.9 x 9 x 12.5 inches (9.9 x 22.9 x 31.8 cm)

Weight

7.4 lbs (3.4 kg) unpacked

Altitude

Operating	0 to 10,000 feet (3,048 meters)
Non-operating	0 to 40,000 feet (12,192 meters)

Optics

Focus Range	4.6 feet (1.4 meters) to infinity

Lamp

Type	270-watt metal halide

Input Power Requirements

87-275VAC; 50-60Hz

Video Audio Input

Input Impedance	5K ohm DC coupled
Maximum Input Voltage	$(L_{IN} + R_{IN})_{PEAK} < 4.5$ V for THD $\leq 0.3\%$ L_{IN} or $R_{IN} < 2.0$ Vrms for THD $\leq 0.3\%$
Sensitivity	100 mV at 1 KHz for 88 dB SPL at 1 meter
Connector Type	RCA jack

Computer Audio Input

Input Impedance	10K ohm nominal, AC coupled
Maximum Input Voltage	$(L_{IN} + R_{IN})_{PEAK} < 4.5$ V for THD ≤ 0.3% L_{IN} or $R_{IN} < 2.0$ Vrms for THD ≤ 0.3%
Sensitivity	100 mV at 1 KHz for 88 dB SPL at 1 meter
Connector Type	3.5 mm (1/8 inch) stereo phone jack

Appendix B

Optional Accessories

Use only KODAK-approved accessories. Other products have not been tested with the projector.

To order these supplies, visit our Web site at www.kodak.com.

Optional Accessories	Cat Number
Lamp Use with KODAK DP900/DP1100 Digital Projectors 270W, metal halide, 1,000 hours	153 5491
KODAK Cable Hub Connector The central connector between the projector and devices. Required for operation; ships with all projectors.	862 2185
18-Meter Extension Cable, with Plenum High quality, plenum cable used to locate the Cable Hub Connector up to 60 feet away from the projector.	187 6853
18-Meter Extension Cable, with Non-Plenum Standard cable used to locate the Cable Hub Connector up to 60 feet away from the projector.	865 1838
Wall Plate A wall face-plate for use when extension cables are installed through the wall.	859 2958

Optional Accessories	Cat Number
Deluxe Travel Case Soft-sided, nylon case for carrying and storing the projector. Designed to fit in airline overhead compartment or under a seat. Holds the Cable Hub Connector, cables, the remote control as well as a laptop computer.	887 1998
Hard Shipping Case Molded hard plastic shipping case. Approved to UPS shipping standard.	832 8692
KODAK Remote Control Infrared remote for controlling projector functions and remotely operating the mouse.	173 0555
Ceiling Mount Kit Use to install the projector in the ceiling.	882 2389
Pipe Tubing Extension Use with the Ceiling Mount Kit to drop the projector from 12" to 46" from the ceiling.	818 5548
False Ceiling Plate Use with dropped/suspended ceilings. The plate is designed to replace a standard ceiling tile 24" x 24" or 24’ x 48". To be used with the Ceiling Mount Kit.	800 3527

Appendix C

Portable and Laptop Activation Chart

Many laptop computers do not automatically turn on their external video port when a secondary display device such as a projector is connected. Activation commands for some laptop computers are listed in the following table. (If your computer is not listed or the given command does not work, refer to the computer's documentation for the appropriate command.) On some laptops, the activation function key is labeled with an icon, for example ⊟/□ or the text CRT/LCD.

Note: Often, pressing the key commands once activates the external video port, pressing it again activates both the external and internal ports, and pressing it a third time activates the internal port. Refer to your computer's documentation for details on your specific model.

Computer	Key command to activate port	Key command to de-activate port
Acer	Ctrl-Alt-Esc (for setup)	Ctrl-Alt-Esc (for setup)
AST* **	FN-D or Ctrl-D	FN-D or Ctrl-D
	Ctrl-FN-D	Ctrl-FN-D
	FN-F5	FN-F5

Computer	Key command to activate port	Key command to de-activate port
	type from A:/IVGA/ CRT FN-F12	type from A:/IVGA/ CRT FN-F12
AMS	FN-F2	FN-F2
AMT	setup screen	setup screen
AT&T	FN-F3 FN-F6	FN-F3 FN-F6
Advanced Logic Research	Ctrl-Alt-V	Ctrl-Alt-V
Altima	Shift-Ctrl-Alt-C	Shift-Ctrl-Alt-L
	setup VGA/ Conf.Simulscan	setup VGA/ Conf.Simulscan
Ambra**	FN-F12	FN-F12
	FN-F5 F2/Choose Option/ F5	FN-F5 F2/Choose Option/ F5
Amrel* **	setup menu	setup menu
	Shift-Ctrl-D	Shift-Ctrl-D

Computer	Key command to activate port	Key command to de-activate port
Apple	see Mac Portable and Mac PowerBook	
Aspen	automatic	automatic
Austin	Ctrl-Alt-comma	Ctrl-Alt-comma
Award	FN-F6	FN-F6
BCC*	automatic	reboot computer
Bondwell	LCD or CRT options after bootup	reboot for LCD or CRT options to appear
Chaplet**	setup screen FN-F6 FN-F4	setup screen FN-F6 FN-F4
Chembook	FN-F6	FN-F6
Commax	Ctrl-Alt-#6	Ctrl-Alt-#5
Compaq* **	Ctrl-Alt-< FN-F4 automatic mode/? (for setup option)	Ctrl-Alt->> FN-F4 automatic mode/? (for setup option)

Computer	Key command to activate port	Key command to de-activate port
Compuadd***	automatic	automatic
	Alt-F for screen setup option	Alt-F for screen setup option
Data General	Ctrl-Alt-Command	Ctrl-Alt-Command
Data General Walkabout	2 CRT/X at DOS prompt	reboot
Datavue	Ctrl-Shift-M	Ctrl-Shift-M
DEC**	FN-F5	FN-F5
	FN-F4	FN-F4
Dell**	Ctrl-Alt-<	Ctrl-Alt->
	Ctrl-Alt-F10 FN-F8 (CRT/LCD)	Ctrl-Alt-F10 FN-F8
	FN-D FN-F12	FN-D FN-F12
Digital*	automatic FN-F2	reboot FN-F2
Dolch	dip switch to CRT	dip switch to LCD

Computer	Key command to activate port	Key command to de-activate port
Epson	dip switch to CRT	dip switch to LCD
Everex*	setup screen option	setup screen option
For-A	Ctrl-Alt-Shift-C	Ctrl-Shift-Alt-L
Fujitsu	FN-F10	
Gateway	FN-F3 FN-F1/FN-F1 again simultaneous	FN-F3 FN-F1
Grid* **	FN-F2, choose auto or simultaneous	FN-F2
	Ctrl-Alt-Tab	Ctrl-Alt-Tab
Hitachi	FN-F7	FN-F7
Honeywell	FN-F10	FN-F10
Hyundai	setup screen option	setup screen option
IBM 970*	automatic	warm reboot
IBM ThinkPad**	reboot, enter setup menu	FN-F2
	FN-F7, select choice from setup menu	

Computer	Key command to activate port	Key command to de-activate port
	FN-F1, select choice FN-F5, select choice PS/2 SC select choice (CRT, LCD, etc.)	
Infotel	FN-F12	FN-F12
Kaypro	boot up, monitor plugged in	unplug monitor
Kris Tech	FN-F8	FN-F8
Leading Edge	FN-T	FN-T
Mac Portable 100	no video port: not compatible	
Mac PowerBook		
140, 145, 150, 170	no video port: requires a 3rd-party interface	
160, 165, 180, 520, 540, 5300	Control Panel folder, PowerBook Display folder; Activate Video Mirroring	warm reboot

Computer	Key command to activate port	Key command to de-activate port
210, 230, 250, 270, 280, 2300	requires Apple Docking Station or Mini Dock	
Magitronic	FN-F4	FN-F4
Mastersport	FN-F2	FN-F1
Micro Express*	automatic	warm reboot
Micron	FN-F2	FN-F2
Microslate*	automatic	warm reboot
Mitsubishi	SW2 On-Off-Off-Off	SW2 Off-On-On-On
NCR	setup screen option	setup screen option
NEC* **	setup screen option	setup screen option
	CRT at the DOS prompt FN-F3	LCD at the DOS prompt FN-F3
Olivetti*	automatic	automatic
	FN-O/*	FN-O/*

Computer	Key command to activate port	Key command to de-activate port
Packard Bell***	FN-F0	FN-F0
	Ctrl-Alt-<	Ctrl-Alt->
Panasonic	FN-F2	FN-F2
Prostar	Ctrl-Alt-S at bootup	Ctrl-Alt-S at bootup
Samsung*	setup screen option	setup screen option
Sanyo	setup screen option	setup screen option
Sharp	dip switch to CRT	dip switch to LCD
Sun SPARC-Dataview	Ctrl-Shift-M	Ctrl-Shift-M
Tandy**	Ctrl-Alt-Insert	Ctrl-Alt-Insert
	setup screen option	setup screen option
Tangent	FN-F5	FN-F5
Texas Instruments*	setup screen option	setup screen option
Top-Link* **	setup screen option	setup screen option
	FN-F6	FN-F6
Toshiba* **	Ctrl-Alt-End	Ctrl-Alt-Home

Computer	Key command to activate port	Key command to de-activate port
	FN-End FN-F5	FN-Home FN-F5
	setup screen option	setup screen option
Twinhead*	FN-F7	FN-F7
	FN-F5	FN-F5
	Automatic	Automatic
WinBook	Ctrl-Alt-F10	Ctrl-Alt-F10
Wyse	software driven	software driven
Zenith**	FN-F10	FN-F10
	FN-F2	FN-F2
	FN-F1	FN-F1
Zeos**	Ctrl-Shift-D FN-F1	Ctrl-Shift-D FN-F1

* These manufacturers have models that automatically send video to the external CRT port when some type of display device is attached.

** These manufacturers offer more than one key command depending on the computer model

Appendix D

Using Video Mirroring with a PowerBook Computer

When you turn video mirroring (called SimulScan in newer PowerBooks-see below) on, the projector displays the same information that appears on your PowerBook's built-in screen. When video mirroring is off, the projector acts like a separate display.

To turn on video mirroring for the first time:

1. Open the Monitor's control panel; click on Monitor 2.
2. Set the number of colors you want.
3. Open the Control Strip; click on the monitor icon.
4. Select "Turn Video Mirroring On."

Now you can turn video mirroring on and off from the Control Strip without having to open the Monitor's control panel again.

When using video mirroring and high color graphics such as slide shows, the projected image occasionally might turn black and white. If this happens, perform the following steps:

1. Turn off video mirroring.
2. Open the Monitor's control panel.
3. Move the white menu bar to Monitor 2 to set the projector as the primary monitor.
4. Restart the PowerBook.

Using SimulScan

Some newer PowerBooks display images on an external monitor or projector differently than previous ones. When using SimulScan, the projector displays the same information that appears on your PowerBook.

To select SimulScan:

1. Open the Control Panel, then double-click Monitors and Sound.
2. In the Resolution list, choose the SimulScan mode, then click OK.
3. If this changes your display settings, a dialog box appears. Click OK to confirm the change.

Appendix E

Projected Image Size

Use these charts and tables to help you determine projected image sizes.

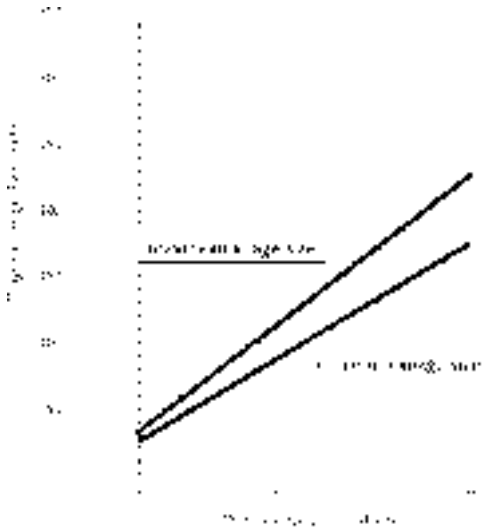

Figure 27Projected image size for DP900

Table 1:
Image Size, Width and Height for DP900-maximum image size

Distance to Screen (feet)	Diagonal (feet)	Width (feet)	Height (feet)
4.9	3.0	2.4	1.8
8	5.0	4.0	3.0
12	7.6	6.1	4.6
16	10.1	8.1	6.1
20	12.6	10.1	7.6
30	18.9	15.1	11.3

Table 2:
Image Size, Width and Height for DP900-minimum image size

Distance to Screen (feet)	Diagonal (feet)	Width (feet)	Height (feet)
4.9	2.4	1.9	1.4
8	3.9	3.1	2.3
12	5.8	4.6	3.5
16	7.7	6.2	4.6
20	9.6	7.7	5.8
30	14.5	11.6	8.7

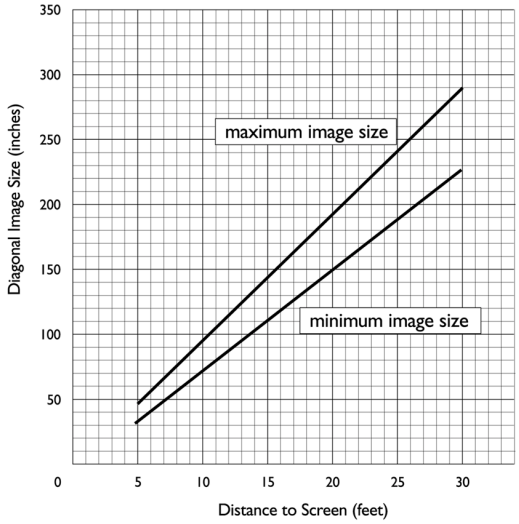

Figure 28Projected image size for DP1100

Table 3:
Image Size, Width and Height for DP1100-maximum image size

Distance to Screen (feet)	Diagonal (feet)	Width (feet)	Height (feet)
4.9	3.6	2.9	2.2
8	6.5	5.2	3.9
12	9.7	7.8	5.8
16	12.9	10.3	7.7
20	16.0	12.8	9.6
30	24.5	19.6	14.7

Table 4:
Image Size, Width and Height for DP1100-minimum image size

Distance to Screen (feet)	Diagonal (feet)	Width (feet)	Height (feet)
4.9	3.0	2.4	1.8
8	5.0	4	3
12	7.4	5.9	4.4
16	9.9	7.9	5.9
20	12.4	9.9	7.4
30	18.6	14.9	11.2

Index

A

accessories
    optional 60
    standard 59
activation commands for laptop computers 61, 71
activation commands for laptops 61
adjusting
    bass 34
    brightness 32
    color 33
    contrast 33
    height 28
    tint 32
    treble 34
    volume 30, 34
altitude limits 55
assistance. See Technical Support
Audio menu 34
    Bass 34
    Treble 34
    Volume 34
Auto Source Select 38

B

bass, adjusting 34
Blank Screen 33
brightness, adjusting 32
buttons on keypad
    Menu 30
    Source 30
    Standby 30
    Volume 30

C

cable hub 13
    cables 59
cables
    A/V 20, 60
    composite video 20
    hub connector 13, 59
    mouse 16
    ordering 59, 60
    S-video 20
cases 59
    ordering 59
ceiling-mounted projection 38
    kit 60
cleaning the projection lens 45
colors
    adjusting 33
    don’t match monitor colors 53
    not displayed 50
compatibility
    IBM-compatible 4
    Macintosh 4
composite video cable
    connecting 20
    ordering (A/V cable) 60
computers, compatible 4
connecting
    IBM-compatible desktop 17–19
    IBM-compatible laptop 15–16
    mouse 16
    power cord 22
    video player 20–21
contrast, adjusting 33
Controls menu 37

Auto Source Select 38
Ceiling 38
Default Source 38
Display Messages 39
Display Startup Screen 39
Plug and Play 39
Rear Projection 38
Standby Time 38
Video Standard 37
customer support numbers 9

D

Default Source 38
dimensions 55
Display menu options
Blank Screen 33
Brightness 32
Color 33
Contrast 33
Reset All 33
Tint 32
Display Messages 39
Display Startup Screen 39
displaying
on-screen menus 30
startup screen 39
status messages 39

E

extension cable 60

F

focus range 56
fuzzy lines 36

H

help
customer support numbers 9
fax 8
hub connector
connecting to equipment 14
connecting to the projector 13
humidity 55

I

IBM-compatible computers
compatibility 4
connecting 15–19
icons
on cable hub 13
image
adjusting 25
centering 36
colors don’t match 53
focusing 28
fuzzy lines 36
has lines or spots 52
not centered 50
not displayed 50
out of focus 52
quality 50–53
resolution 3
reversed 38, 52
size 11, 73
streaked 53
too wide or too narrow 52
zooming 28
Image Manager 42
Image menu options 35
Auto Image 35
Auto Resize 35
Horiz. Position 36

Manual Sync 36
Manual Tracking 36
Vert. Position 37

K

Kensington lock 49
keypad buttons
menu 30
source 30
standby 30
volume 30

L

lamp
ordering 59
replacing 46
turns off unexpectedly 53
lamp hour counter 41
Language menu 40
language, selecting for menus 40
laptop computers
activation sequence to allow secondary display 61
connecting IBM-compatible 15
lens
cap 59
cleaning 45

M

Macintosh computers
compatibility 4
Menu button 31
menus. See on-screen menus
monitor, colors don’t match 53
mouse, connecting 15

N

NTSC video 37

O

on-screen menus
Audio menu 34
changing functions 31
changing language of 40
Controls menu 37
Display menu 32
displaying 31
Image menu 35
Language menu 40
Status menu 40

P

PAL video 32, 37
Plug and Play 39
power cord
connecting 22
power switch 22, 23
power up sequence 22, 51
project from behind the screen 38

R

rear projection 38
relative humidity 55
remote control
ordering 60
replacing the batteries 49
using 26, 29
replacing lamp module 46
re-positioning image on screen 36
resetting adjustments 33
resolution 3

S

safety guidelines 1
SECAM video 32, 37
security feature 49
service numbers 9
setting up 11
SimulScan with PowerBooks 72
Source button 30
specifications 55
Standby button 30
Standby Time 38
startup screen 39
Status menu 40
support numbers 9
S-video
    connecting 20

T

temperature limits 55
test pattern 51
text not visible 50
tint, adjusting 32
treble, adjusting 34
troubleshooting 50
turning off the projector 23
turning on the projector 22

U

USB mouse 16

V

vertical lines displayed 36, 52
video 32
    mirroring PowerBook 71
video standards 37
volume
    adjusting 30, 34
    buttons 30

W

warranty 10, 81
weight 55

Z

zooming the image 28

WARRANTY TIME PERIOD

Kodak warrants the KODAK DIGITAL SCIENCE DP 900 and DP 1100 Digital Projector (excluding lamps) to be free from malfunctions and defects in both materials and workmanship for two years from the date of purchase.

WARRANTY REPAIR COVERAGE

This warranty will be honored within the geographical location that the product was purchased.

If the equipment does not function properly during the warranty period due to defects in either materials or workmanship, Kodak will, at its option, either repair or replace the equipment without charge, subject to the conditions and limitations stated herein. Such repair will include all labor as well as any necessary adjustments and/or replacement parts.

If replacement parts are used in making repairs, these parts may be remanufactured, or may contain remanufactured materials. If it is necessary to replace the entire system, it may be replaced with a remanufactured system.

Kodak will also provide telephone assistance during the warranty period.

LIMITATIONS

WARRANTY SERVICE WILL NOT BE PROVIDED WITHOUT DATED PROOF OF PURCHASE.

THIS WARRANTY BECOMES NULL AND VOID IF YOU FAIL TO PACK YOUR DIGITAL PROJECTOR IN A MANNER CONSISTENT WITH THE ORIGINAL PRODUCT PACKAGING AND DAMAGE OCCURS DURING PRODUCT SHIPMENT.

THIS WARRANTY DOES NOT COVER: CIRCUMSTANCES BEYOND KODAK'S CONTROL; SERVICES OR PARTS TO CORRECT PROBLEMS RESULTING FROM THE USE OF ATTACHMENTS, ACCESSORIES, OR ALTERATIONS NOT MARKETED BY KODAK; SERVICE REQUIRED AS THE RESULT OF UNAUTHORIZED MODIFICATIONS OR SERVICE; MISUSE, ABUSE; FAILURE TO FOLLOW KODAK'S OPERATING, MAINTENANCE, OR REPACKAGING INSTRUCTIONS; OR FAILURE TO USE ITEMS SUPPLIED BY KODAK (SUCH AS ADAPTORS AND CABLES).

KODAK MAKES NO OTHER WARRANTIES, EXPRESS, IMPLIED, OR OF MERCHANTABILITY OR FITNESS FOR A PARTICULAR PURPOSE FOR THIS EQUIPMENT OR SOFTWARE.

REPAIR OR REPLACEMENT WITHOUT CHARGE ARE KODAK'S ONLY OBLIGATION UNDER THIS WARRANTY. KODAK WILL NOT BE RESPONSIBLE FOR ANY SPECIAL, CONSEQUENTIAL OR INCIDENTAL DAMAGES RESULTING FROM THE PURCHASE, USE, OR IMPROPER FUNCTIONING OF THIS EQUIPMENT REGARDLESS OF THE CAUSE. SUCH DAMAGES FOR WHICH KODAK WILL NOT BE RESPONSIBLE INCLUDE, BUT ARE NOT LIMITED TO, LOSS OF REVENUE OR PROFIT, DOWNTIME COSTS, LOSS OF USE OF THE EQUIPMENT, COST OF ANY SUBSTITUTE EQUIPMENT, FACILITIES OR SERVICES, OR CLAIMS OF YOUR CUSTOMERS FOR SUCH DAMAGES.

Depending on your geographical location, some limitations and exclusions may not apply.

Shipment of a unit from the customer to the kodak service center will be at the customer's expense.

This warranty is not transferable from the original purchaser of the equipment.

APPLICATION SUPPORT

For application specific support, contact your reseller, systems integrator, software manufacturer, or dealer.

HOW TO OBTAIN SERVICE

Please refer to the Service and Support section of your User's Guide for the support hotline designated to your location.

When returning a digital projector for repair, the unit shall be packed in its original packing materials. A problem report should also be enclosed with the equipment. If the original packaging has been discarded or is not available, packing will be at the owner's expense.

The repaired or replaced unit will be shipped from Kodak within five business days from the date of the digital projector receipt at the service center.

Unless a specific Kodak warranty is communicated to the purchaser in writing by a Kodak company, no other warranty or liability exists beyond the information contained above, even though defect, damage, or loss may be caused by negligence or other act.

To obtain warranty repair service contact your local Kodak representative. For assistance, refer to the Service and Support information in the KODAK Digital Projector User's Guide.

Eastman Kodak Company
343 State Street
Rochester, New York 14650

Kodak is a trademark of
Eastman Kodak Company.

PN 010-0210-00 8/99 ©Eastman Kodak Company Printed in the U.S.A.