myprojectorlamps.com

The most trusted, dependable name in projector lamp sales.

http://www.myprojectorlamps.com

http://www.myprojectorlamps.ca

http://www.myprojectorlamps.eu

The following projector manual has not been modified or altered in any way.

PROJECTOR
User's Manual

HDP2300 High Definition Projector

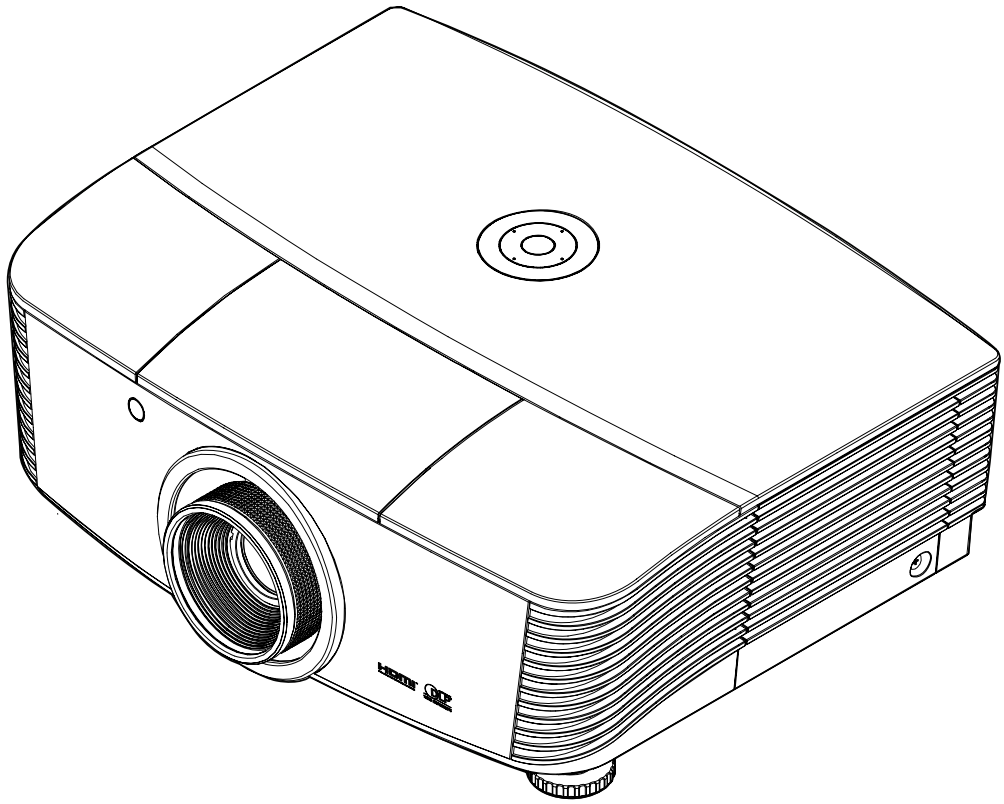

Copyright

This publication, including all photographs, illustrations and software, is protected under international copyright laws, with all rights reserved. Neither this manual, nor any of the material contained herein, may be reproduced without written consent of the author.

© Copyright 2010

Disclaimer

The information in this document is subject to change without notice. The manufacturer makes no representations or warranties with respect to the contents hereof and specifically disclaims any implied warranties of merchantability or fitness for any particular purpose. The manufacturer reserves the right to revise this publication and to make changes from time to time in the content hereof without obligation of the manufacturer to notify any person of such revision or changes.

Trademark Recognition

Kensington is a U.S. registered trademark of ACCO Brand Corporation with issued registrations and pending applications in other countries throughout the world.

All other product names used in this manual are the properties of their respective owners and are acknowledged.

Important Safety Information

> ***Important:***
> *It is strongly recommended that you read this section carefully before using the projector. These safety and usage instructions will ensure that you enjoy many years of safe use of the projector. Keep this manual for future reference.*

Symbols Used

Warning symbols are used on the unit and in this manual to alert you of hazardous situations.

The following styles are used in this manual to alert you to important information.

> ***Note:***
> *Provides additional information on the topic at hand.*

> ***Important:***
> *Provides additional information that should not be overlooked.*

> ***Caution:***
> *Alerts you to situations that may damage the unit.*

> ***Warning:***
> *Alerts you to situations that may damage the unit, create a hazardous environment, or cause personal injury.*

Throughout this manual, component parts and items in the OSD menus are denoted in bold font as in this example:
"Push the **MENU** button on the remote control to open the **DISPLAY** menu."

General Safety Information

- Do not open the unit case. Aside from the projection lamp, there are no user-serviceable parts in the unit. For servicing, contact qualified service personnel.
- Follow all warnings and cautions in this manual and on the unit case.
- The projection lamp is extremely bright by design. To avoid damage to eyes, do not look into the lens when the lamp is on.
- Do not place the unit on an unstable surface, cart, or stand.
- Avoid using the system near water, in direct sunlight, or near a heating device.
- Do not place heavy objects such as books or bags on the unit.

Projector Installation Notice

- Place the projector in a horizontal position
  The tilt angle of the projector should not exceed 15 degrees, nor should the projector be installed in any way other than the desktop and ceiling mount, otherwise lamp life could decrease dramatically.

- Allow at least 50 cm clearance around the exhaust vent.

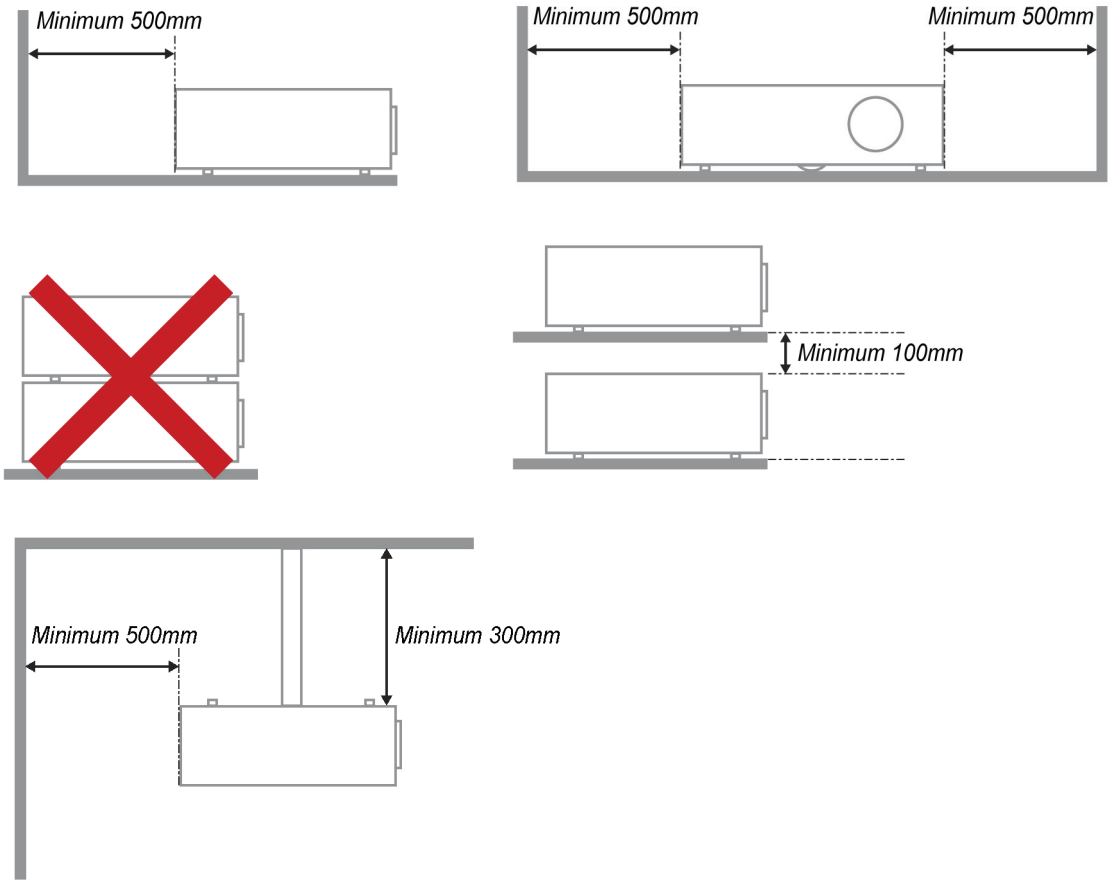

- Ensure that the intake vents do not recycle hot air from the exhaust vent.
- When operating the projector in an enclosed space, ensure that the surrounding air temperature within the enclosure does not exceed operating temperature while the projector is running, and the air intake and exhaust vents are unobstructed.
- All enclosures should pass a certified thermal evaluation to ensure that the projector does not recycle exhaust air, as this may cause the device to shutdown even if the enclosure temperature is with the acceptable operating temperature range.

Power Safety

- Only use the supplied power cord.
- Do not place anything on the power cord. Place the power cord where it will not be in the way of foot traffic.
- Remove the batteries from the remote control when storing or not in use for a prolonged period.

Replacing the Lamp

Replacing the lamp can be hazardous if done incorrectly. See *Replacing the Projection Lamp* on page 35 for clear and safe instructions for this procedure. Before replacing the lamp:

- Unplug the power cord.
- Allow the lamp to cool for about one hour.

Cleaning the Projector

- Unplug the power cord before cleaning. See *Cleaning the Projector* on page 37.
- Allow the lamp to cool for about one hour.

Regulatory Warnings

Before installing and using the projector, read the regulatory notices in the *Regulatory Compliance* section on page 50.

Important Recycle Instructions:

Hg Lamp(s) inside this product contain mercury. This product may contain other electronic waste that can be hazardous if not disposed of properly. Recycle or dispose in accordance with local, state, or federal Laws. For more information, contact the Electronic Industries Alliance at WWW.EIAE.ORG. For lamp specific disposal information check WWW.LAMPRECYCLE.ORG.

Symbol Explanations

DISPOSAL: Do not use household or municipal waste collection services for disposal of electrical and electronic equipment. EU countries require the use of separate recycling collection services.

About this manual

This manual is intended for end users and describes how to install and operate the DLP projector. Wherever possible, relevant information—such as an illustration and its description—has been kept on one page. This printer-friendly format is both for your convenience and to help save paper, thereby protecting the environment. It is suggested that you only print sections that are relevant to your needs.

Table of Contents

GETTING STARTED **1**

PACKING CHECKLIST 1
VIEWS OF PROJECTOR PARTS 2
HDP2300 Series Front-right View *2*
Top view—On-screen Display (OSD) buttons and LEDs *4*
Rear view *5*
Bottom view *7*
REMOTE CONTROL PARTS 8
REMOTE CONTROL OPERATING RANGE 10
PROJECTOR AND REMOTE CONTROL BUTTONS 10

SETUP AND OPERATION **11**

INSERTING THE REMOTE CONTROL BATTERIES 11
CONNECTING INPUT DEVICES 12
INSTALLING OR REMOVING THE OPTIONAL LENS 13
Removing the Existing Lens From the Projector *13*
Installing the New Lens *14*
STARTING AND SHUTTING DOWN THE PROJECTOR 15
Starting the projector *15*
Shutting down the Projector *16*
ADJUSTING THE PROJECTOR LEVEL 17
ADJUSTING PROJECTED IMAGE POSITION USING SHIFT 18
Adjusting the vertical image position *18*
Adjusting the horizontal image position *19*
Shift Range Diagram *19*
ADJUSTING THE ZOOM RING, FOCUS AND KEYSTONE 20

ON-SCREEN DISPLAY (OSD) MENU SETTINGS **21**

OSD MENU CONTROLS 21
Navigating the OSD *21*
SETTING THE OSD LANGUAGE 22
OSD MENU OVERVIEW 23
PICTURE: BASIC MENU 24
PICTURE: ADVANCED MENU 25
HSG Adjustment *26*
ViviSettings *26*
DISPLAY MENU 27
PC Detail Adjustment *28*
SYSTEM SETUP: BASIC MENU 29
Menu Settings *30*
Source *30*
SYSTEM SETUP: ADVANCED MENU 31
Lamp *32*
HDMI *32*
Closed Caption *33*
12V OUT A *33*
INFORMATION MENU 34

MAINTENANCE AND SECURITY **35**

REPLACING THE PROJECTION LAMP 35
CLEANING THE PROJECTOR 37
Cleaning the Lens *37*
Cleaning the Case *37*
USING THE PHYSICAL LOCK 38
Using the Kensington® Lock *38*
Using the Security Chain Lock *38*

TROUBLESHOOTING 39

COMMON PROBLEMS AND SOLUTIONS 39
TIPS FOR TROUBLESHOOTING 39
LED ERROR MESSAGES 40
IMAGE PROBLEMS 41
LAMP PROBLEMS 41
REMOTE CONTROL PROBLEMS 42
HAVING THE PROJECTOR SERVICED 42
HDMI Q & A 43

SPECIFICATIONS 44

SPECIFICATIONS 44
PROJECTION DISTANCE VS. PROJECTION SIZE 45
HDP2300 Series Projection Distance and Size Table 45
HDP2300 SERIES TIMING MODE TABLE 46
PROJECTOR DIMENSIONS 49

REGULATORY COMPLIANCE 50

FCC WARNING 50
CANADA 50
SAFETY CERTIFICATIONS 50
EN 55022 WARNING 50

GETTING STARTED

Packing Checklist

Carefully unpack the projector and check that the following items are included:

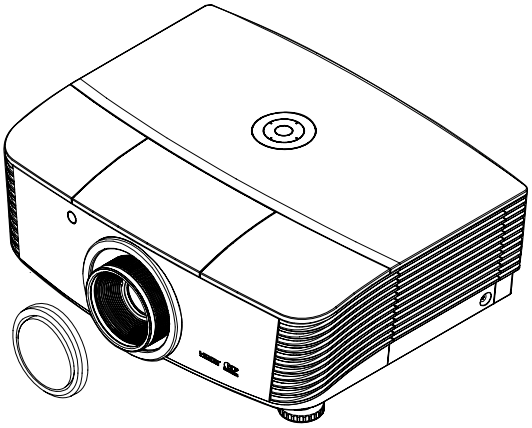

HDP2300 SERIES PROJECTOR WITH LENS CAP

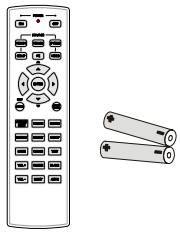

REMOTE CONTROL
(WITH TWO AA BATTERIES)

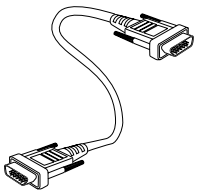

VGA CABLE

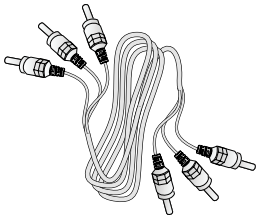

COMPONENT CABLE

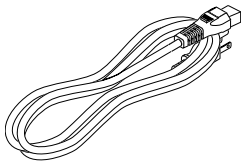

POWER CORD

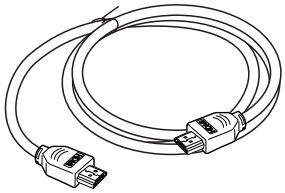

HDMI CABLE

CD-ROM
(THIS USER'S MANUAL)

WARRANTY CARD

QUICK START GUIDE

Contact your dealer immediately if any items are missing, appear damaged, or if the unit does not work. It is recommend that you keep the original packing material should you ever need to return the equipment for warranty service.

Caution:
Avoid using the projector in dusty environments.

Views of Projector Parts

HDP2300 Series Front-right View

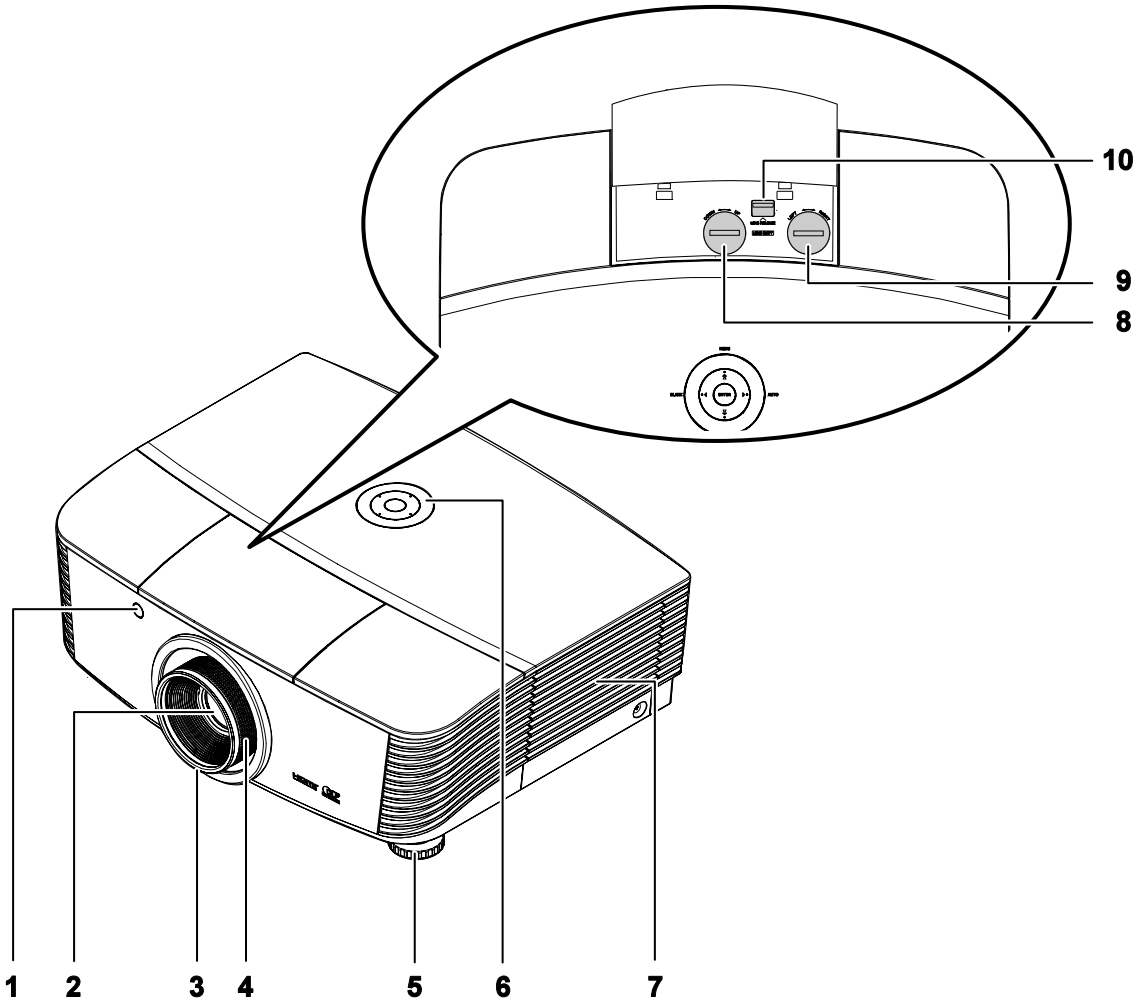

ITEM	LABEL	DESCRIPTION	SEE PAGE:
1.	IR receiver	Receives IR signal from remote control	*8*
2.	Lens	Projection Lens	
3.	Focus ring	Focuses the projected image	*18*
4.	Zoom ring	Enlarges the projected image	
5.	Height adjuster	Adjusts level of projector	*17*
6.	Function keys	See Top view—On-screen Display (OSD) buttons and LEDs.	*4*
7.	Lamp cover	Removes cover to replace lamp or color wheel	*35*
8.	Vertical lens shift	Adjusts the image position vertically	*18*

ITEM	LABEL	DESCRIPTION	SEE PAGE:
9.	Horizontal lens shift	Adjusts the image position horizontally	***19***
10.	Lens release button	Press the release button before removing the lens	***13***

Important:
Ventilation openings on the projector allow for good air circulation, which keeps the projector lamp cool. Do not obstruct any of the ventilation openings.

Top view—On-screen Display (OSD) buttons and LEDs

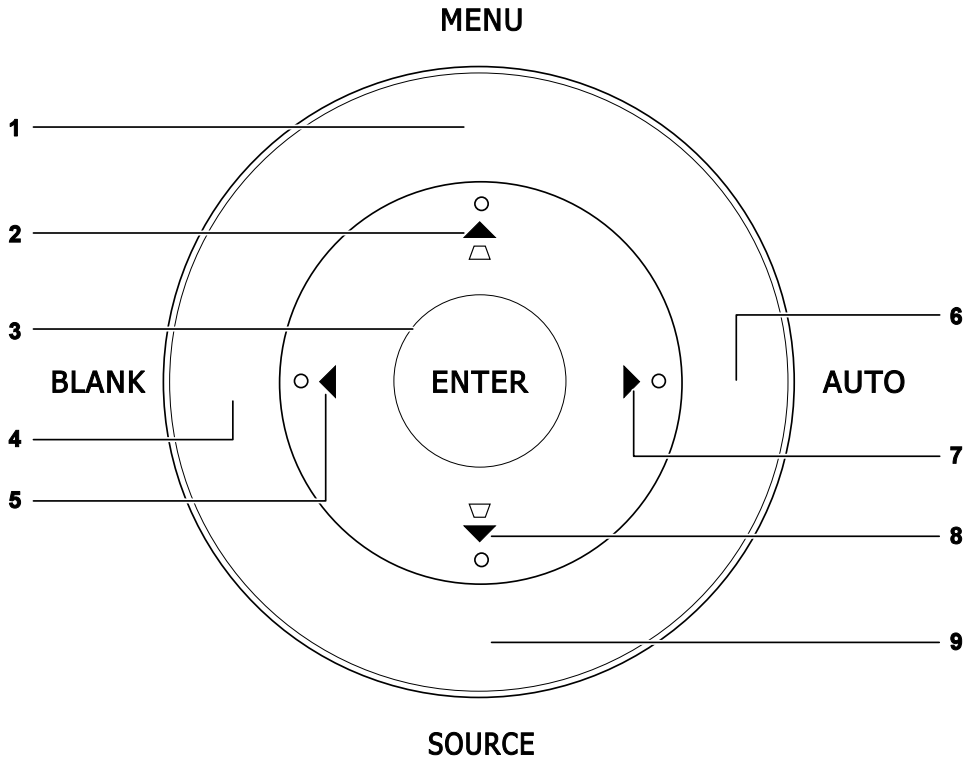

ITEM	LABEL	DESCRIPTION	SEE PAGE:
1.	MENU	Opens and exits OSD menus	21
2.	▲ (Up cursor) / Keystone+	Navigates and changes settings in the OSD Quick Menu – For Keystone	
3.	ENTER	Enter or confirm highlighted OSD menu item	
4.	BLANK	Displays a blank screen and mutes audio	
5.	◄ (Left cursor)	Navigates and changes settings in the OSD	21
6.	AUTO	Optimizes image size, position, and resolution	
7.	► (Right cursor)	Navigates and changes settings in the OSD	21
8.	▼ (Down cursor) / Keystone-	Navigates and changes settings in the OSD Quick Menu – For Keystone	
9.	SOURCE	Enter the Source menu	12

Rear view

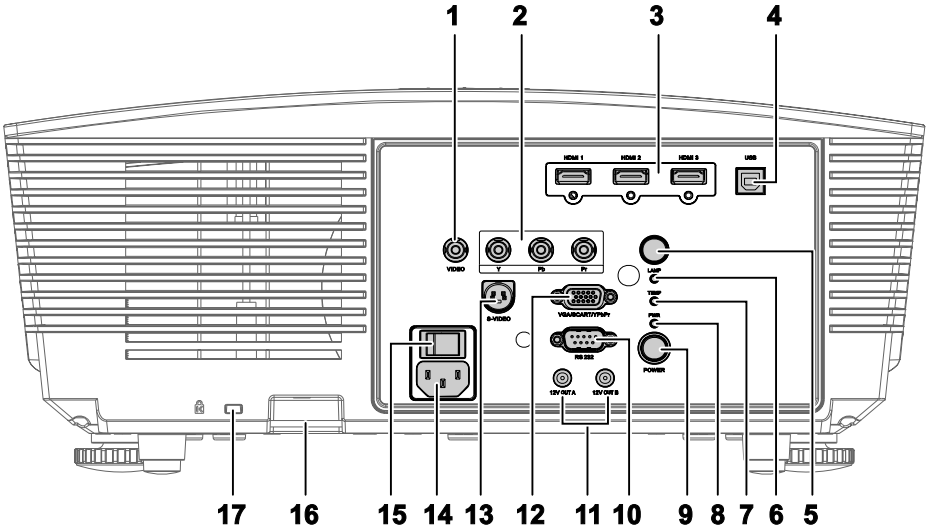

ITEM	LABEL	DESCRIPTION		SEE PAGE:
1.	VIDEO	Connect the composite cable from a video device		12
2.	YPbPr	Connect a component video enabled device		
3.	HDMI 1/ 2/ 3	Connect the HDMI CABLE from a HDMI device		
4.	USB	Connect the USB cable from a computer		
5.	IR receiver	Receive IR signal from remote control		8
6.	LAMP LED	Red	Error code	40
		Flashing	Lamp is not ready (warming up/shutting down/cooling) (see LED Error Messages on page 40)	
7.	TEMP LED	Red	Error code	
8.	PWR LED	Orange	Standby	
		Green	In normal operation	
		Flashing	Powering on/ cooling	
9.	POWER	Turns the projector on or off (main power switch must be turned on first). Press to place the projector in standby mode.		15
10.	RS-232C	Connects RS-232 serial port cable for remote control		12
11.	12V OUT A/ B	When connected to the screen through a commercially available cable, the screen deploys automatically on start up of the projector. The screen retracts when the projector is powered off (see notes below).		33

Note:
- *To use this feature, you must turn on the Screen Trigger function on the OSD.*
- *Screen controllers are supplied and supported by screen manufacturers.*
- *Do not use this jack for anything other than intended use.*

ITEM	LABEL	DESCRIPTION	SEE PAGE:
12.	VGA/ SCART/ YPbPr	Connects the RGB cable from a computer and components	***12***
13.	S-VIDEO	Connects the S-Video cable from a video device	
14.	AC IN	Connects the power cable	***13***
15.	Power switch	Turns on/off the projector	***15***
16.	Security chain lock	Helps protect the HDP2300 from unauthorized use	***38***
17.	Kensington Lock	Secures to permanent object with a Kensington® Lock system	***38***

Bottom view

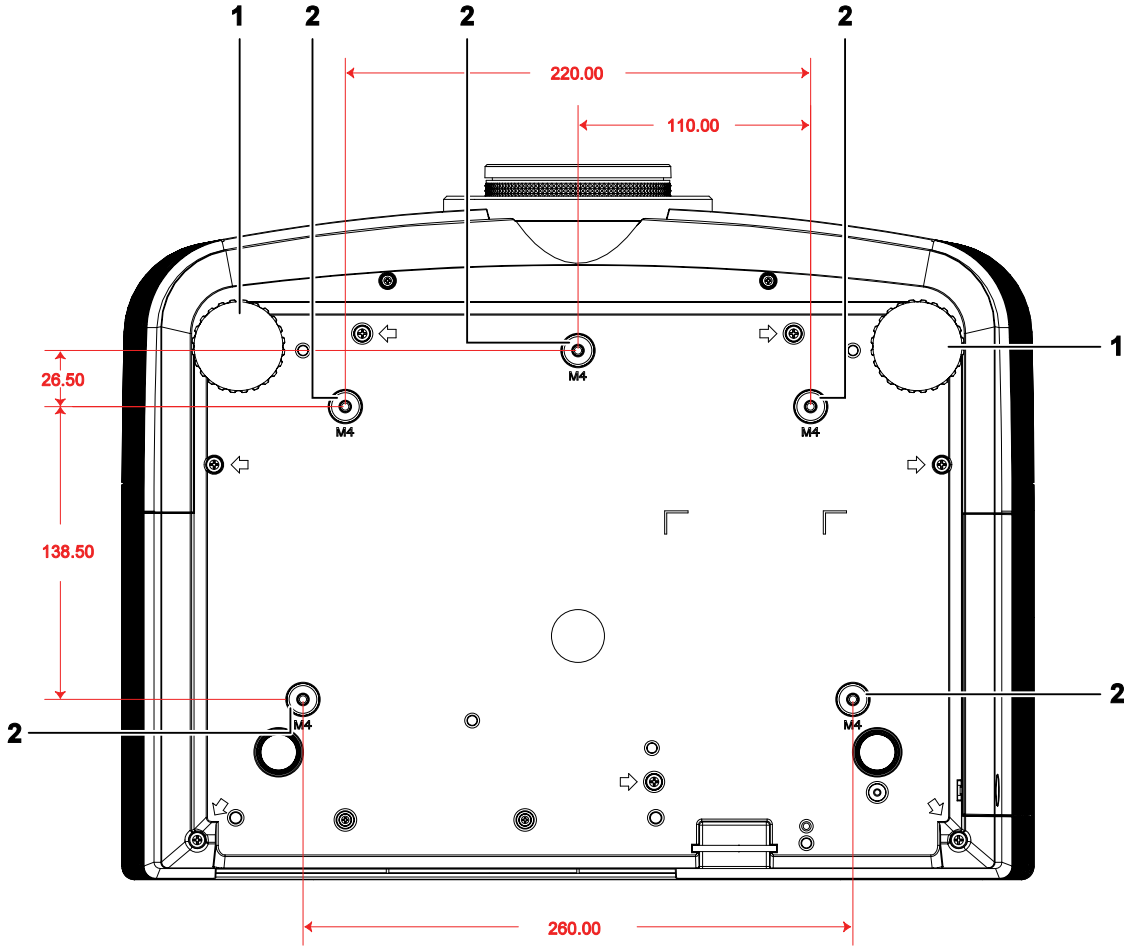

ITEM	LABEL	DESCRIPTION	SEE PAGE:
1.	Tilt adjustor	Rotate adjuster lever to adjust angle position.	*17*
2.	Ceiling support holes	Contact your dealer for information on mounting the projector on a ceiling	

Note:
When installing, ensure that you use only UL Listed ceiling mounts.
For ceiling installations, use approved mounting hardware and M4 screws with a maximum screw depth of 6 mm (0.23 inch).
The construction of the ceiling mount must be of a suitable shape and strength. The ceiling mount load capacity must exceed the weight of the installed equipment, and as an additional precaution be capable of withstanding three times the weight of the equipment (not less than 5.15 kg) over a period of 60 seconds.

Remote Control Functions

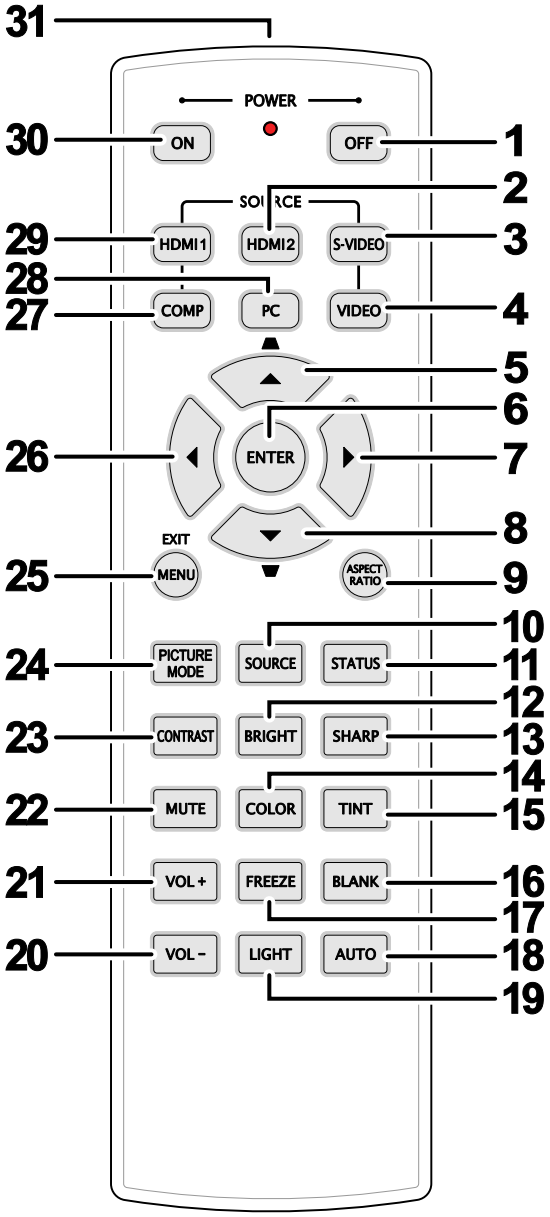

Important:

1. *Avoid using the projector with bright fluorescent lighting turned on. Certain high-frequency fluorescent lights can disrupt remote control operation.*

2. *Be sure nothing obstructs the path between the remote control and the projector. If the path between the remote control and the projector is obstructed, you can bounce the signal off certain reflective surfaces such as projector screens.*

3. *The buttons and keys on the projector have the same functions as the corresponding buttons on the remote control. This user's manual describes the functions based on the remote control.*

ITEM	LABEL	DESCRIPTION	SEE PAGE:
1.	Power OFF	Turns the projector off	***13***
2.	HDMI 2	Displays the HDMI 2 source selection	
3.	S-VIDEO	Displays the S-VIDEO source selection	
4.	VIDEO	Displays the VIDEO source selection	
5.	Up cursor / Keystone+	Navigates and changes settings in the OSD Quick Menu – For Keystone	***21***
6.	ENTER	Enters and confirms settings in the OSD	
7.	Right cursor	Navigates and changes settings in the OSD	
8.	Down cursor		
9.	ASPECT RATIO	Displays the ASPECT RATIO selections	
10.	SOURCE	Detects the input device	
11.	STATUS	Opens the OSD Status menu (the menu only opens when an input device is detected)	***21***
12.	BRIGHT	Displays the brightness setting bar	
13.	SHARP	Displays the sharpness setting bar	
14.	COLOR	Displays the color setting bar	
15.	TINT	Displays the tint setting bar	
16.	BLANK	Makes the screen blank	
17.	FREEZE	Freezes/unfreezes the on-screen picture	
18.	AUTO	Auto adjustment for frequency, phase, and position	
19.	LIGHT	Turns on or off the remote control backlight for about 10 seconds. Pressing any other key while the backlight is on keeps the backlight on for a further 10 seconds.	
20.	VOL -	Adjusts volume (HDP2300 without Audio Function)	***21***
21.	VOL +		
22.	MUTE	Mutes the built-in speaker	
23.	CONTRAST	Displays the contrast settings bar	
24.	PICTURE MODE	Changes the Display Mode setting	
25.	MENU/ EXIT	Opens and exits the OSD	***21***
26.	Left cursor	Navigates and changes settings in the OSD	
27.	COMP	Displays the Component source selection	
28.	PC	Displays the PC source selection	
29.	HDMI 1	Displays the HDMI 1 source selection	
30.	Power ON	Turns the projector on	***13***
31.	IR transmitter	Transmits signals to projector	

Remote Control Operating Range

The remote control uses infrared transmission to control the projector. It is not necessary to point the remote directly at the projector. Provided you are not holding the remote perpendicular to the sides or the rear of the projector, the remote will function well within a radius of about 7 meters (23 feet) and 15 degrees above or below the projector level. If the projector does not respond to the remote control, move a little closer.

Projector and Remote Control Buttons

The projector can be operated using the remote control or the buttons on the top of the projector. All operations can be carried out with the remote control; however, the buttons on the projector are limited in use.

Inserting the Remote Control Batteries

1. Remove the battery compartment cover by sliding the cover in the direction of the arrow.

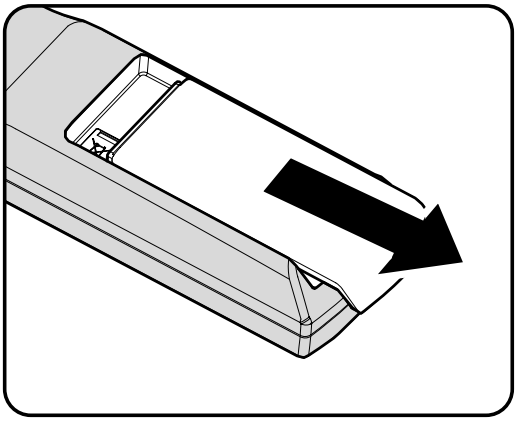

2. Insert the battery with the positive side facing up.

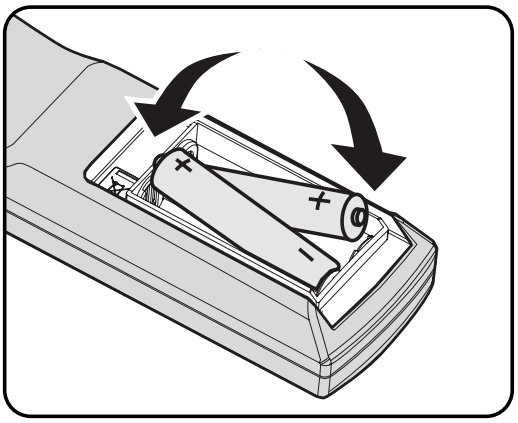

3. Replace the cover.

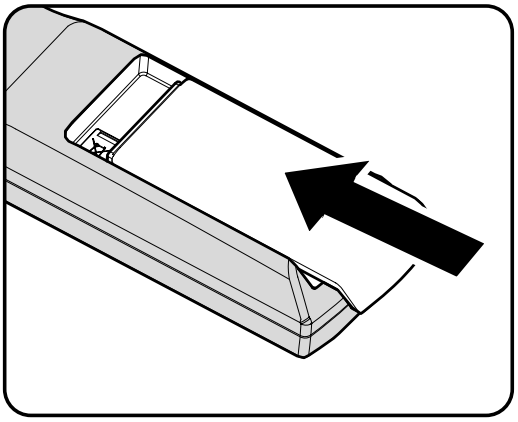

Caution:
1. *Only use AA batteries (Alkaline batteries are recommended).*

2. *Dispose of used batteries according to local ordinance regulations.*

3. *Remove the batteries when not using the projector for prolonged periods.*

Connecting Input Devices

A PC or notebook computer and video devices can be connected to the projector at the same time. Video devices include DVD, VCD, and VHS players, as well as movie camcorders and digital still cameras. Check the user manual of the connecting device to confirm it has the appropriate output connector.

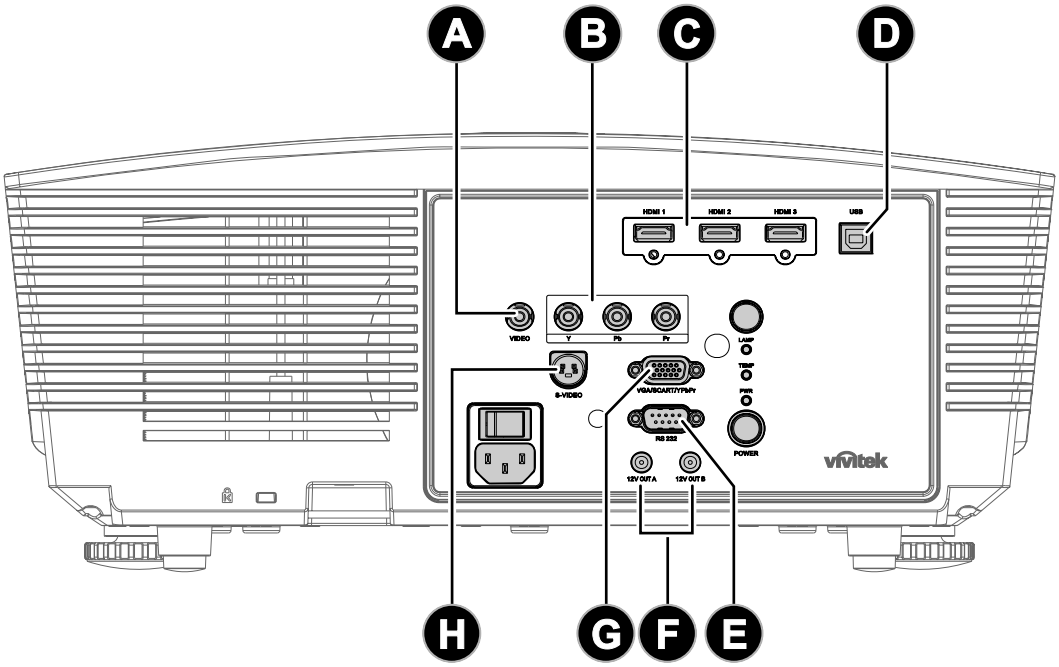

ITEM	LABEL	DESCRIPTION
A	VIDEO	Connect the composite cable from a video device
B	YPbPr	Connect a component video enabled device
C	HDMI 1/ 2/ 3	Connect the HDMI cable from a HDMI device
D	USB	Connect the USB cable from a computer
E	RS-232C	Connect RS-232 serial port cable for remote control
F	12V OUT A/ B	When connected to the screen through a commercially available cable, the screen deploys automatically on start up of the projector. The screen retracts when the projector is powered off.
G	VGA/ SCART/ YPbPr	Connects the RGB cable from a computer and components
H	S-VIDEO	Connect the S-VIDEO cable from a video device

Warning:
As a safety precaution, disconnect all power to the projector and connecting devices before making connections.

Installing or Removing the Optional Lens

Caution:
- *Do not shake or place excessive pressure on the projector or the lens components as the projector and lens components contain precision parts.*
- *Before removing or installing the lens, be sure to turn off the projector, wait until the cooling fans stop, and turn off the main power switch.*
- *Do not touch the lens surface when removing or installing the lens.*
- *Keep fingerprints, dust or oil off the lens surface.*
- *Do not scratch the lens surface.*
- *Work on a level surface with a soft cloth under it to avoid scratching.*
- *If you remove and store the lens, attach the lens cap to the projector to keep off dust and dirt.*

Removing the Existing Lens From the Projector

1. Pull and release the top cover to open as shown.

2. Push the LENSE RELEASE button to the unlock position.

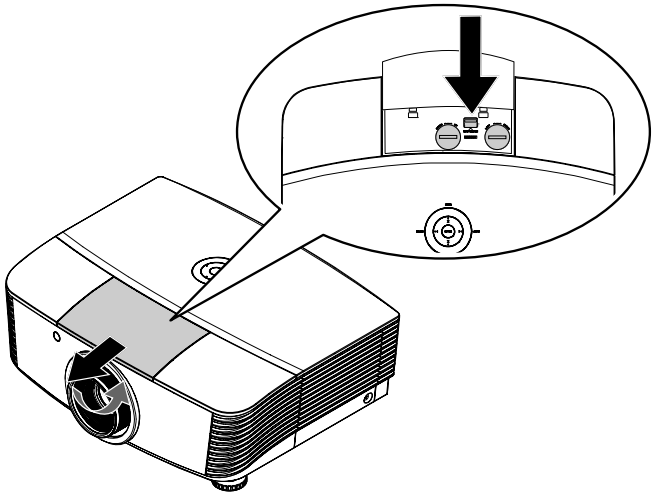

3. Grasp the lens.

4. Rotate the lens counterclockwise. The existing lens will be disengaged.

5. Pull out the existing lens slowly.

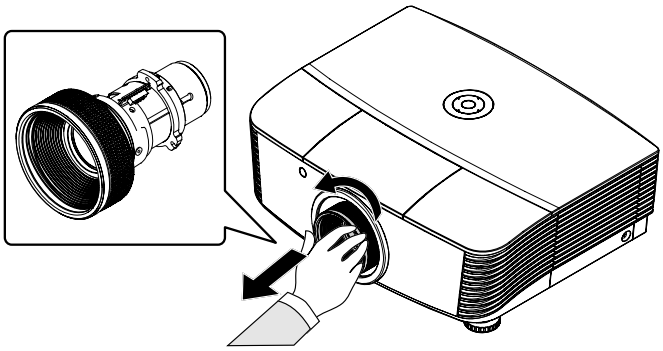

Installing the New Lens

1. Align the notches and correctly position the electrical contact pad as shown in the picture.

> ***Note:***
> *Pin of IRIS should be in the direction as shown in the picture.*

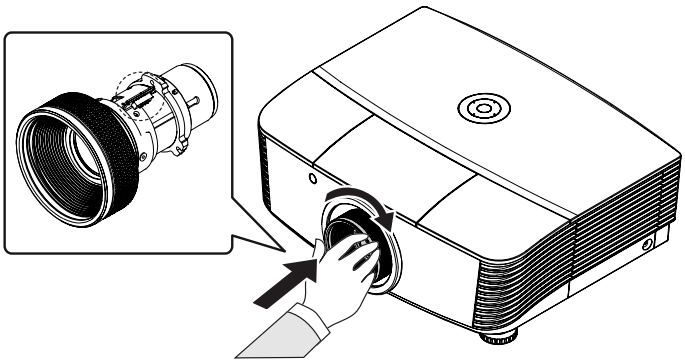

2. Rotate the lens clockwise until you feel it click into place.

Starting and Shutting down the Projector

Starting the projector

1. Remove the lens cap.

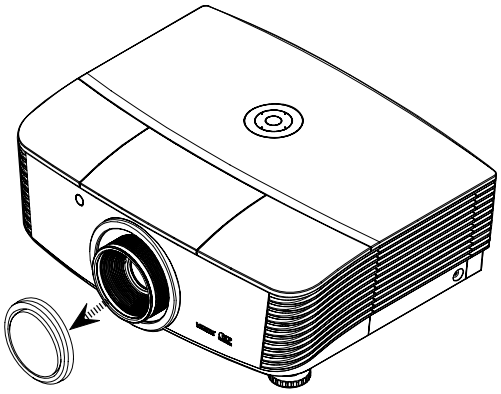

2. Securely connect the power cord and signal cable. When connected, the power led will turn red.

3. Turn on the lamp by pressing "POWER" button on the rear of the projector or "ON" on the remote control.
The PWR LED will now flash green.
The startup screen will display in approximately 30 seconds. The first time you use the projector, you can select your preferred language from quick menu after the startup screen display.

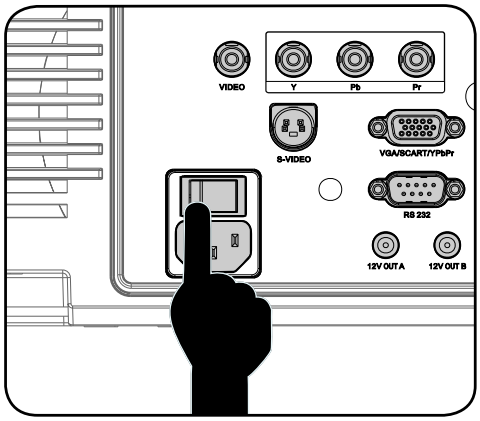

4.

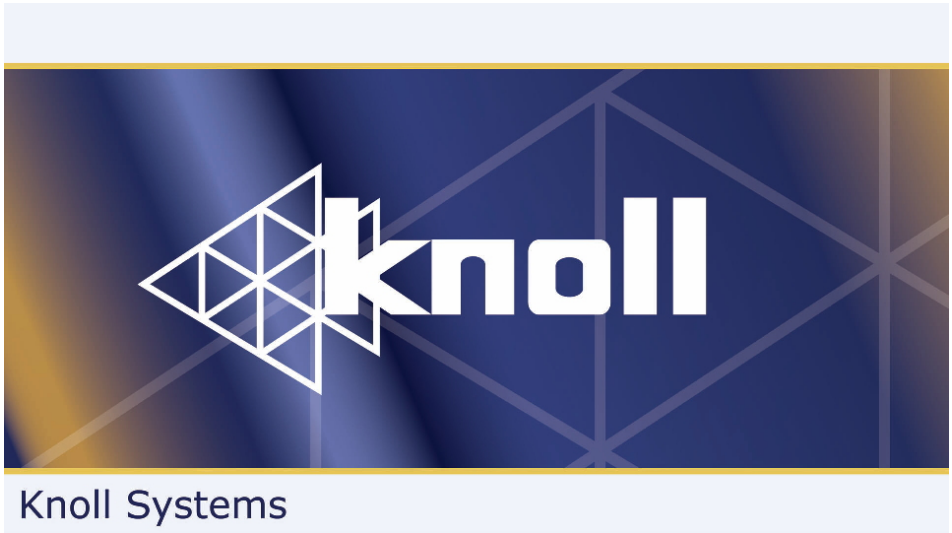

5. Turn on your source that you want to display on the screen (computer, notebook, video player, etc). The projector will detect the source automatically and will display on the screen. If not, push menu button and go to "SYSTEM SETUP: Basic".

> ***Note:***
> *If you connected multiple sources at the same time, press the "Source" key on the remote control to switch between inputs.*

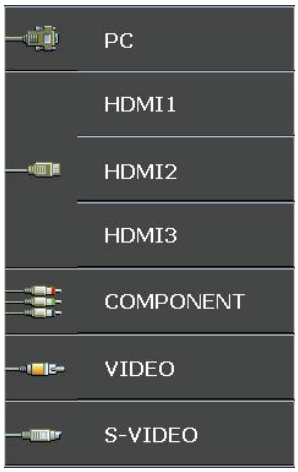

- PC: Analog RGB / SCART / YPbPr via VGA input
- HDMI 1/2/3: High Definition Multimedia Interface
- COMPONENT: DVD input YCbCr / YPbPr, or HDTV input YPbPr
- VIDEO: Traditional composite video
- S-VIDEO: Super video (Y/C separated)

> ***Note:***
> *Turn on the projector first and then select the signal sources. First time to turn on the projector: Remember to select the type of lens you have installed.*

Shutting down the Projector

1. Press the "OFF" button on the remote control or "POWER" button on the rear side of the projector two times with one second interval in between to turn off the projector. First push of button will display the following message on the screen.
Press the button again to confirm the shut down. If the button is not pressed, the message will disappear in 5 seconds.

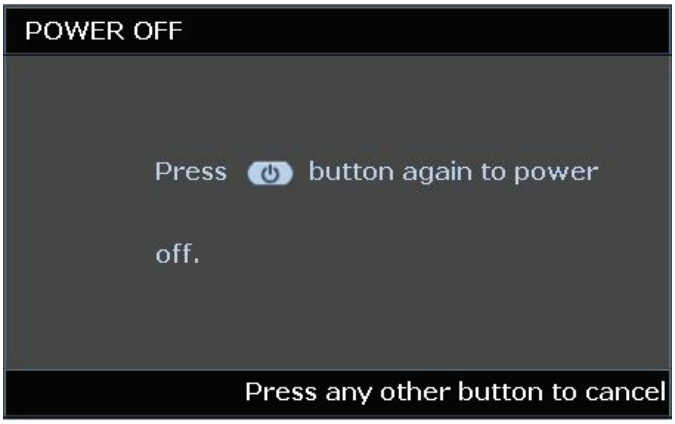

2. The cooling fans continue to operate for about 60 seconds for cooling cycle and the PWR LED will turn orange.
When the light is solid orange, the projector has entered standby mode.
If you wish to turn the projector back on, you must wait until the projector has completed the cooling cycle and has entered standby mode. Once in standby mode, simply press "POWER" button on the rear of the projector or "ON" on the remote control to restart the projector.

3. Disconnect the power cord from the electrical outlet and the projector.

4. Do not turn on the projector immediately following a power off procedure.

Adjusting the Projector Level

Take note of the following when setting up the projector:

- *The projector table or stand should be level and sturdy.*
- *Position the projector so that it is perpendicular to the screen.*
- *Remove the Back Foot Holder on the rear adjuster foot before adjusting the projection angle.*
- *Ensure the cables are in a safe location. You could trip over them.*

1. To raise the level of the projector, twist the adjusters clockwise.

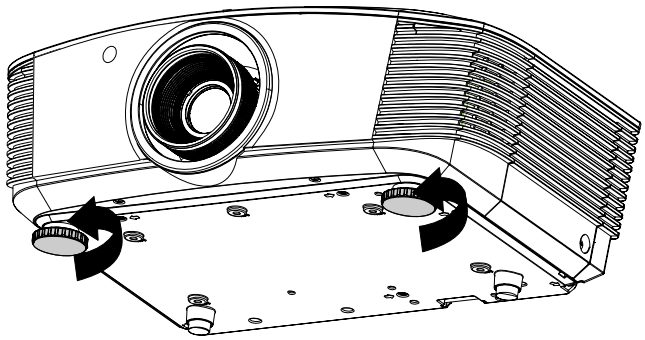

2. To lower the level of the projector, lift the projector and twist the adjusters counter clockwise.

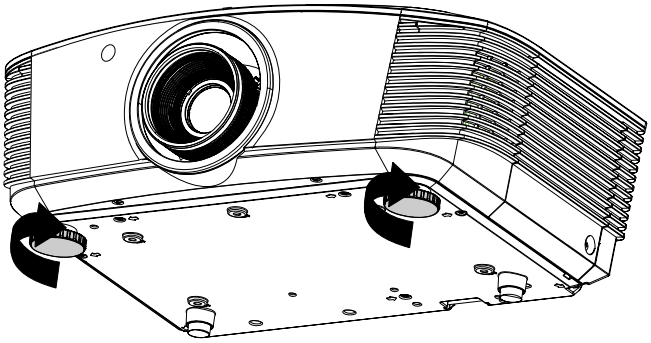

Adjusting Projected Image Position Using Shift

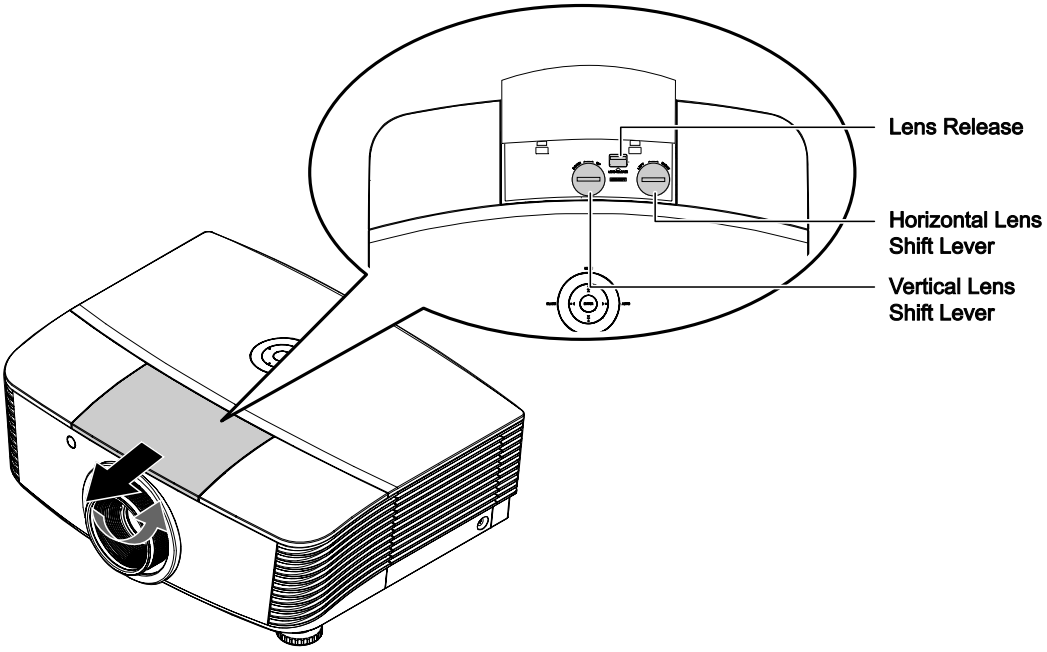

The Shift feature provides a lens shift function that can be used to adjust the position of the projected image either horizontally or vertically within the range detailed below.

Shift is a unique system that provides lens shift while maintaining a much higher ANSI contrast ratio than traditional lens shift systems.

Adjusting the vertical image position

The vertical image height can be adjusted between 120% and -40% of half image height. Note that the maximum vertical image height adjustment can be limited by the horizontal image position. For example it is not possible to achieve the maximum vertical image position height detailed above if the horizontal image position is at maximum. Please consult the Shift Range diagram below for further clarification.

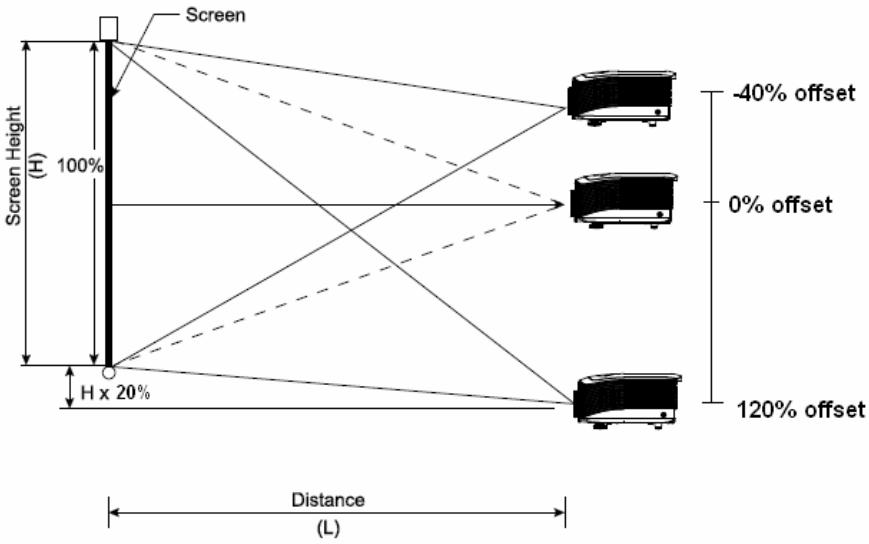

Adjusting the horizontal image position

With the lens in the center position the horizontal image position can be adjusted to the left or right by up to a maximum of 10% of the half image width. Note that the maximum horizontal image height adjustment can be limited by the vertical image position. For example it is not possible to achieve the maximum horizontal image position if the vertical image position is at maximum. Please consult the Shift Range diagram below for further clarification.

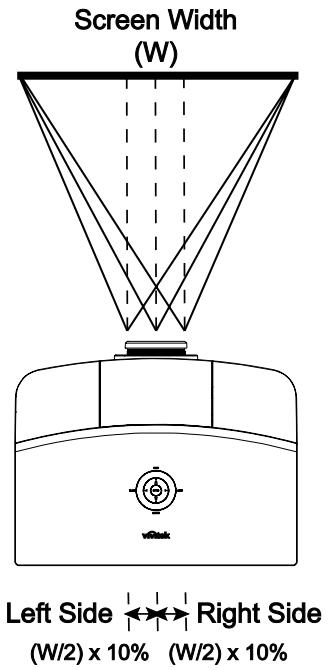

Shift Range Diagram

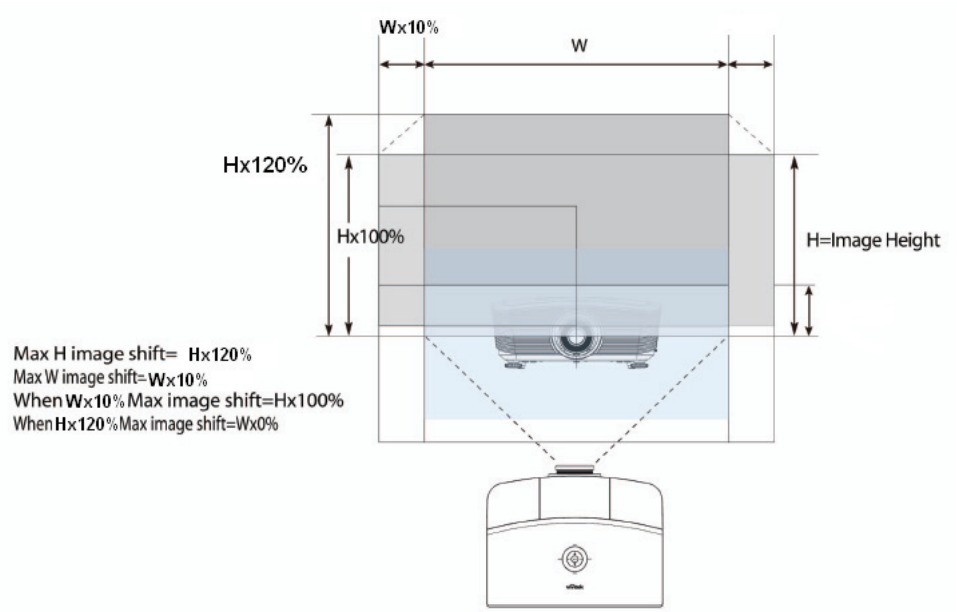

Adjusting the Zoom ring, Focus and Keystone

1. Use the **Image-zoom** control (on the projector only) to resize the projected image and screen size.

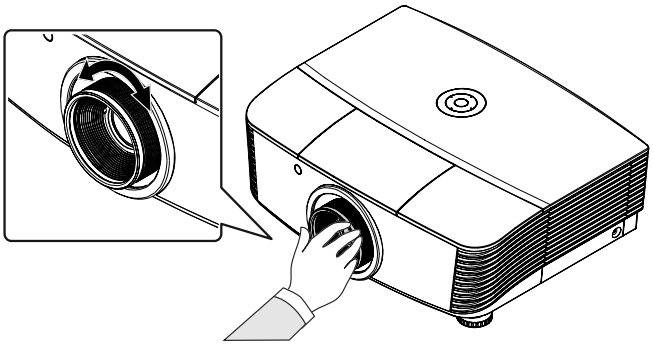

2. Use the **Image-focus** control (on the projector only) to sharpen the projected image.

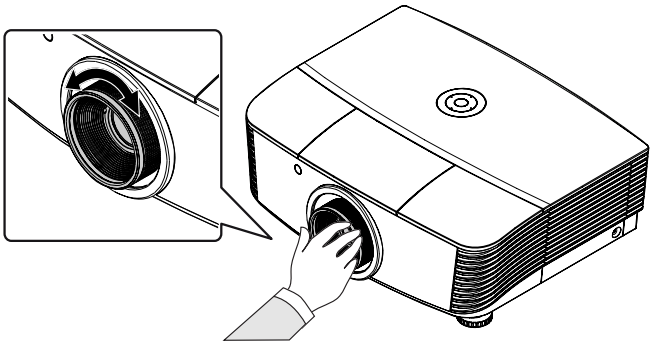

3. Use the **KEYSTONE** buttons (on the projector or the remote control) to correct image-trapezoid (wider top or bottom) effect.

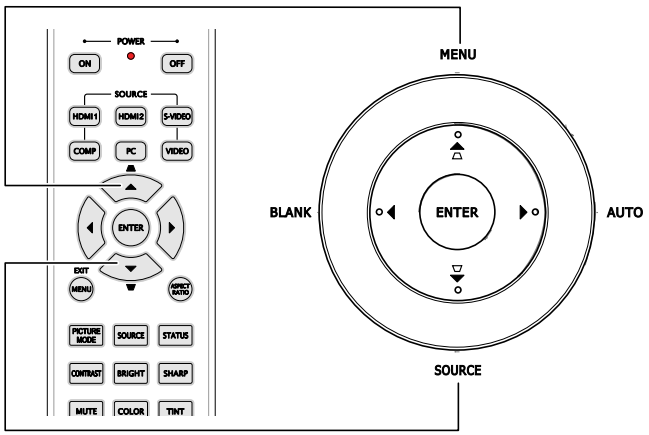

Remote control and OSD panel

4. The keystone control appears on the display.

OSD Menu Controls

The projector has an OSD that lets you make image adjustments and change various settings.

Navigating the OSD

You can use the remote control cursor buttons or the buttons on the top of the projector to navigate and make changes to the OSD. The following illustration shows the corresponding buttons on the projector.

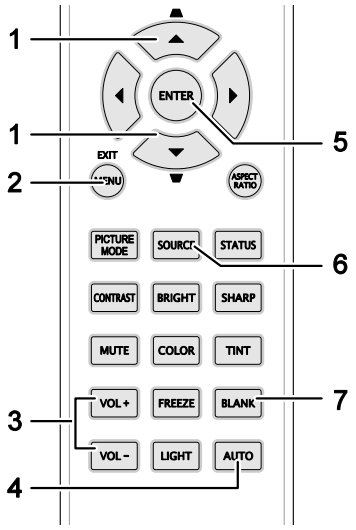

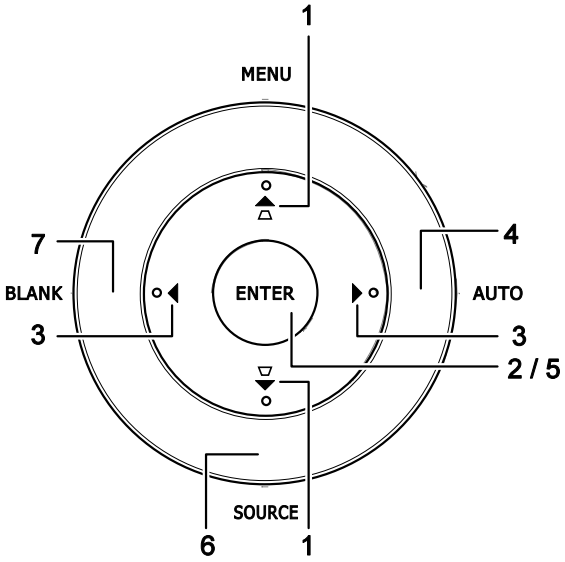

1. To enter the OSD, press the **MENU** button.
2. There are six menus. Press the cursor ◄► button to move through the menus.
3. Press the cursor ▲▼ button to move up and down in a menu.
4. Press ◄► to change values for settings.
5. Press **MENU** to close the OSD or leave a sub menu.

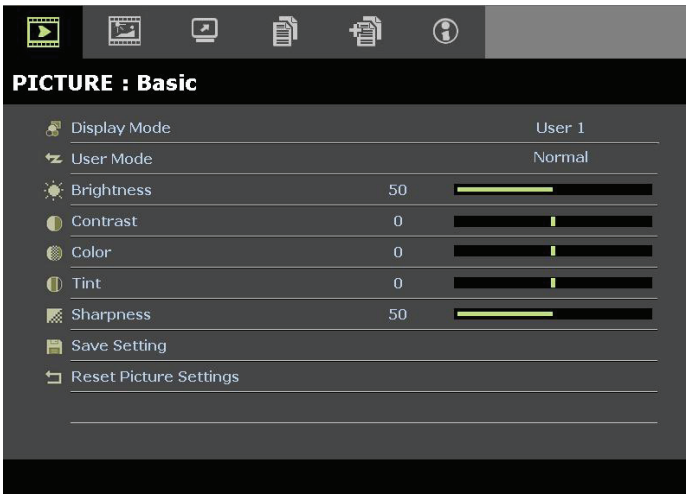

Note:
Depending on the video source, not all items in the OSD are available. For example, the ***PC Detail Adjustment*** *item in the PICTURE: Basic menu can only be modified when connected to a PC. Items that are not available cannot be accessed and are grayed out.*

Setting the OSD Language

Set the OSD language to your preference before continuing.

1. Press the **MENU** button. Press the cursor ◄► button to navigate to **SYSTEM SETUP: Basic**.

2. Press the cursor ▲▼ button until **Language** is highlighted.
3. Press the cursor ◄► button until the language you want is selected.
4. Press the **MENU** button to close the OSD.

OSD Menu Overview

Use the following illustration to quickly find a setting or determine the range for a setting.

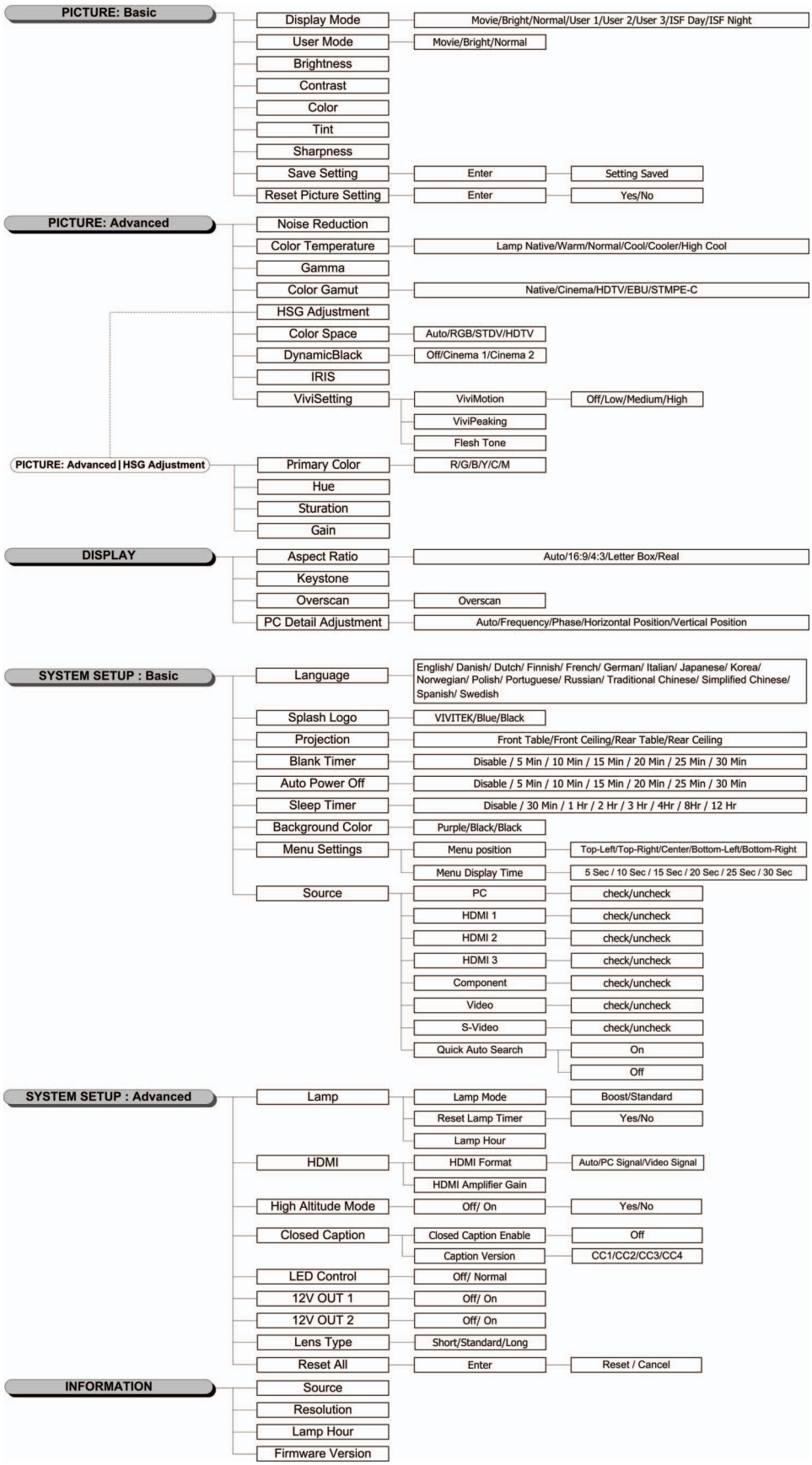

PICTURE: Basic Menu

Press the **MENU** button to open the **OSD** menu. Press the cursor ◄► button to move to the **PICTURE: Basic** menu. Press the cursor ▲▼ button to move up and down in the **PICTURE: Basic** menu. Press ◄► to change values for settings.

> ***Note:***
> *Customizeing the settings in **PICTURE: Basic** menu is only available in User 1/ 2/ 3 mode.*

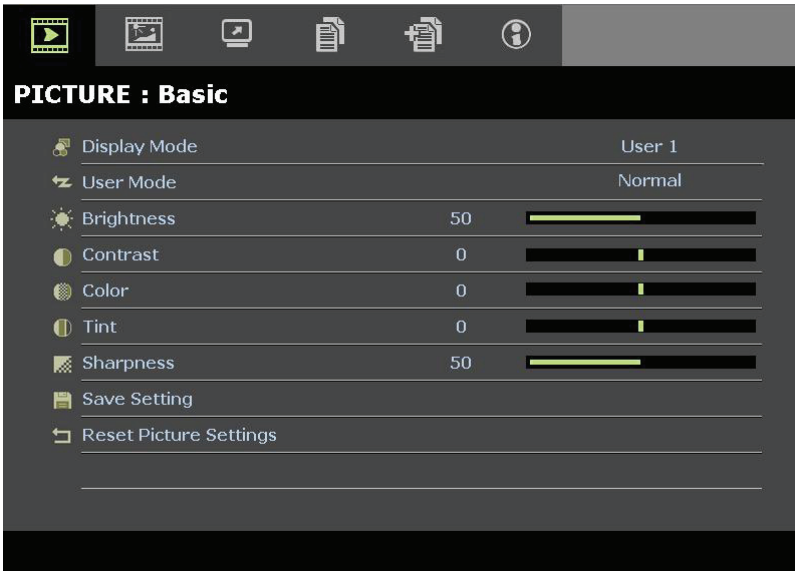

ITEM	DESCRIPTION
Display Mode	Press the cursor ◄► buttons to set the Display Mode. (Range: Movie/ Bright/ Normal/ User 1/ User 2/ User 3) **Notes:** ISF Day/ISF Night is available when ISF Mode is on.
User Mode	Press the cursor ◄► buttons to set the User Mode. (Range: Movie/ Bright/ Normal**)**
Brightness	Press the cursor ◄► buttons to adjust the display brightness.
Contrast	Press the cursor ◄► buttons to adjust the display contrast.
Color	Press the cursor ◄► buttons to adjust the video saturation. **Notes:** This function is only available when Component, Video or S-Video input source is selected.
Tint	Press the cursor ◄► buttons to adjust the video tint/hue. **Notes:** This function is only available when Component, Video or S-Video with NTSC system input source is selected.
Sharpness	Press the cursor ◄► buttons to adjust the display sharpness. **Notes:** This function is only available when Component, Video or S-Video input source is selected.
Save Setting	Press the **ENTER** button to save all settings.
Reset Picture Settings	Press the **ENTER** button to reset all settings to default values.

PICTURE: Advanced Menu

Press the **MENU** button to open the **OSD** menu. Press the cursor ◄► button to move to the **PICTURE: Advanced** menu. Press the cursor ▲▼ button to move up and down in the **PICTURE: Advanced** menu. Press ◄► to change values for settings.

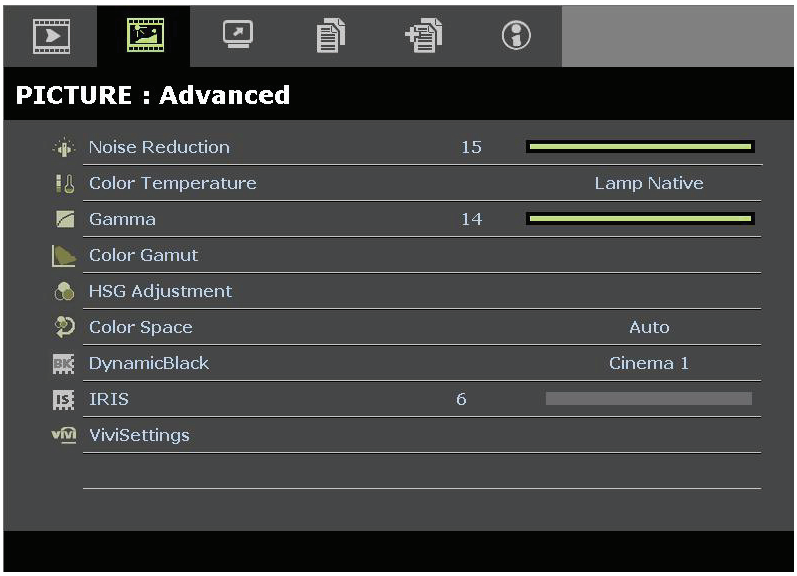

ITEM	DESCRIPTION
Noise Reduction	Press the cursor ◄► button to adjust the Noise Reduction.
Color Temperature	Press the cursor ◄► button to set the Color Temperature.
Gamma	Press the cursor ◄► button to adjust the gamma correction of the display. **Notes:** This function is only available in User 1/ 2/ 3 mode.
Color Gamut	Press the cursor ◄► button to set the Color Gamut. (Range: Native/ **Cinema**/ HDTV/ EBU/ SMPTE-C)
HSG Adjustment	Press the **ENTER** button to enter the **HSG Adjustment** sub menu. See *HSG Adjustment* on page 26.
Color Space	Press the cursor ◄► button to set the Color Space. (Range: **Auto**/ RGB/ SDTV/ HDTV) **Notes:** This function is only available when HDMI input source is selected.
DynamicBlack	Press the cursor ◄► button to set the DynamicBlack. DynamicBlack enables the projector to automatically optimize the display of dark movie scenes enabling them to be shown in incredible detail" to "the overall brightness of darker scenes resulting in a better black level and incredible detail. (Range: **Cinema 1**/ Cinema 2/ Off).
IRIS	Press the cursor ◄► button to adjust the IRIS. (Range: 1 to 9).
ViviSettings	Press the **ENTER** button to enter the **ViviSettings** sub menu. See *ViviSettings* on page 26.

HSG Adjustment

Press the **ENTER** button to enter the **HSG Adjustment** sub menu.

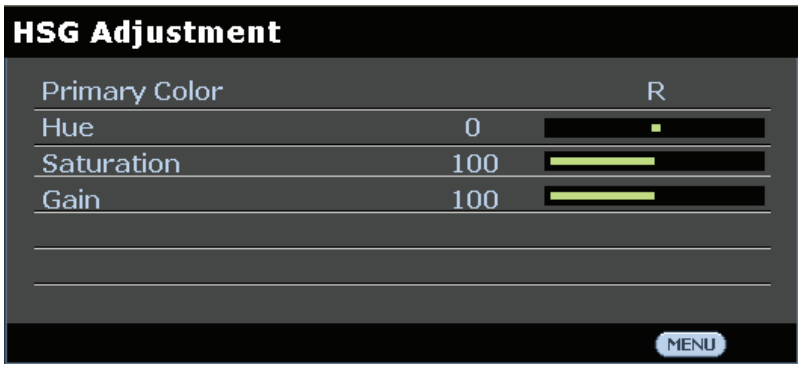

ITEM	DESCRIPTION
Primary Color	Press the ◄► buttons to set the Primary Color. **Notes:** There are six sets (**R**/ G/ B/ C/ M/ Y) of colors to be customized.
Hue	Press the ◄► buttons to adjust the Hue.
Saturation	Press the ◄► buttons to adjust the Saturation.
Gain	Press the ◄► buttons to adjust the Gain.

ViviSettings

Press the **ENTER** button to enter the **ViviSettings** sub menu.

ITEM	DESCRIPTION
ViviMotion	Press the ◄► buttons to select different MEMC level. (Range: Off / Low / Medium / High)
ViviPeaking	Press the ◄► buttons to adjust motion adaptive sharpness enhancement (2D Peaking) value. (Range: 0 to 3)
Flesh Tone	Press the ◄► buttons to select different Flesh Tone. (Range: 0 to 5) **Notes:** This function is only available when Component Video or S-Video input source is selected.

DISPLAY Menu

Press the **MENU** button to open the **OSD** menu. Press the cursor ◄► button to move to the **DISPLAY** menu. Press the cursor ▲▼ button to move up and down in the **DISPLAY** menu. Press ◄► to change values for settings.

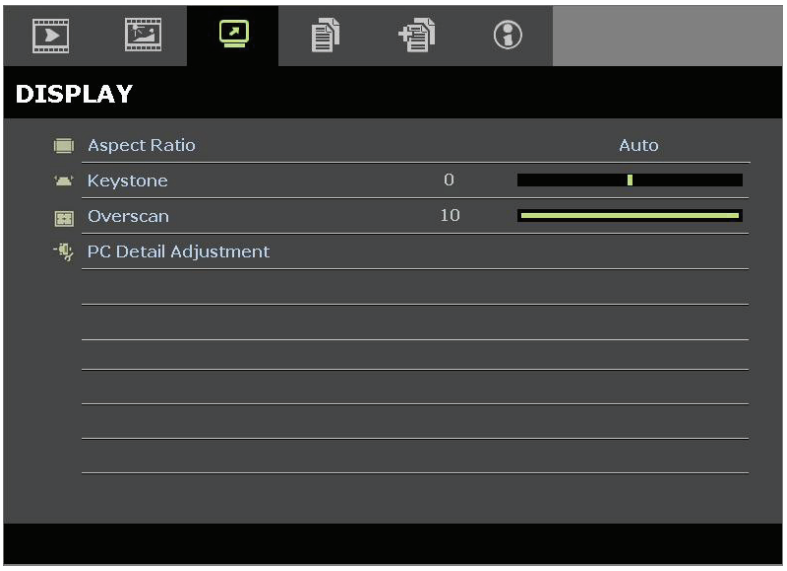

ITEM	DESCRIPTION
Aspect Ratio	Press the cursor ◄► button to set the Aspect Ratio. (Range: **Auto**/ 16:9/ 4:3/ Letter Box/ Real)
Keystone	Press the cursor ◄► button to adjust the Keystone. **Notes:** This function is available when the **Auto keystone** function is turned off.
Overscan	Press the cursor ◄► button to adjust the Overscan.
PC Detail Adjustment	Press the **ENTER** button to enter the **PC Detail Adjustment** sub menu. See *PC Detail Adjustment* on page 28.

PC Detail Adjustment

Press the **ENTER** button to enter the **PC Detail Adjustment** sub menu.

> ***Note:***
> *Customizing the settings in **PC Detail Adjustment** menu is only available when PC input source (analog RGB) is selected.*

ITEM	DESCRIPTION
Auto	Press the **ENTER/AUTO** button on the control panel or the **ENTER/AUTO** button on the remote control to automatically adjust frequency, phase, and position.
Frequency	Press the ◄► buttons to adjust the A/D sampling number.
Phase	Press the ◄► buttons to adjust the A/D sampling clock.
Horizontal Position	Press the ◄► buttons to adjust the display position right or left.
Vertical Position	Press the ◄► buttons to adjust the display position up or down.

SYSTEM SETUP: Basic Menu

Press the **MENU** button to open the **OSD** menu. Press the cursor ◄► button to move to the **SYSTEM SETUP: Basic** menu. Press the cursor ▲▼ button to move up and down in the **SYSTEM SETUP: Basic** menu. Press ◄► to change values for settings.

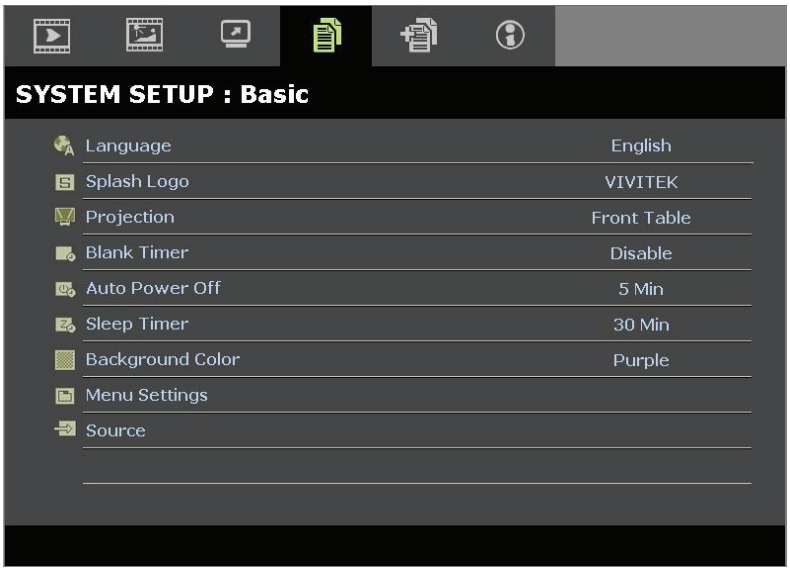

ITEM	DESCRIPTION
Language	Press the cursor ◄► buttons to select a different localization menu. (Range: English/ Danish/ Dutch/ Finnish/ French/ German/ Italian/ Japanese/ Korea/Norwegian/ Polish/ Portuguese/ Russian/ Traditional Chinese/ Simplified Chinese/ Spanish/ Swedish)
Splash Logo	Press the cursor ◄► buttons to select a different startup screen. (Range: **Vivitek**/ Blue/ Black)
Projection	Press the cursor ◄► buttons to choose from four projection methods: **Front Table**/ Front Ceiling/ Rear Table/ Rear Ceiling.
Blank Timer	Press the cursor ◄► buttons to set the Blank Screen timer. The projected image is automatically restored after the set time. (Range: **Disable**/ 5 min/ 10 min/ 15 min/ 20 min/ 25 min/ 30 min)
Auto Power Off	Press the cursor ◄► buttons to set the Auto Power Off timer. The projector automatically turns off if no input source is detected after the preset period of time. (Range: **Disable**/ 5 min/ 10 min/ 15 min/ 20 min/ 25 min/ 30 min)
Sleep Timer	Press the cursor ◄► buttons to set Sleep timer. The projector automatically turns off after the preset period of time. (Range: **Disable**/ 30 min/ 1hr/ 2hr/ 3hr/ 4hr/ 8hr/ 12hr)
Background Color	Press the cursor ◄► buttons to select the background color when no input source is detected. (Range: Purple/ Black/ Blue)
Menu Settings	Press the **ENTER** button to enter the **Menu Settings** sub menu. See *Menu Settings* on page 30.
Source	Press the **ENTER** button to enter the **Source** sub menu. See *Source* on page 30.

Menu Settings

Press the **ENTER** button to enter the **Menu Settings** sub menu.

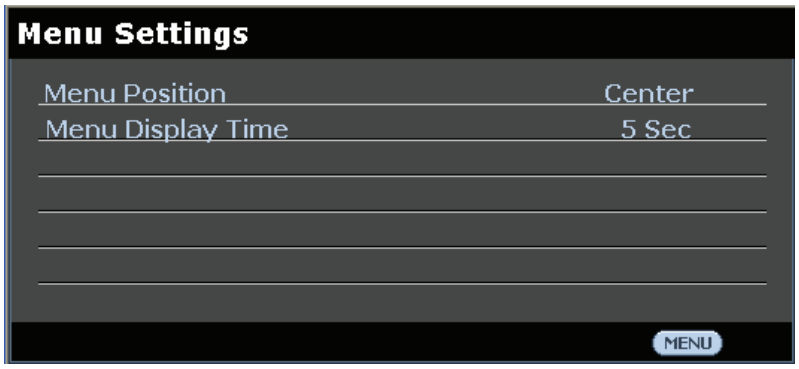

ITEM	DESCRIPTION
Menu Position	Press the ◄► buttons to select from five OSD locations: Top-Left/ Top-Right/ **Center**/ Bottom-Left/ Bottom-Right.
Menu Display Time	Press the ◄► buttons to set the Menu Display timer before the OSD times out. (Range: 5sec/ 10sec/ **15sec**/ 20sec/ 25sec/ 30sec)

Source

Press the **ENTER** button to enter the **Source** sub menu.

ITEM	DESCRIPTION
PC	Press the ◄► buttons to enable or disable the PC source.
HDMI 1	Press the ◄► buttons to enable or disable the HDMI source.
HDMI 2	
HDMI 3	
Component	Press the ◄► buttons to enable or disable the Component source.
Video	Press the ◄► buttons to enable or disable the Video source.
S-Video	Press the ◄► buttons to enable or disable the S-Video source.
Quick Auto Search	Press the ◄► buttons to enable or disable Quick Auto Search for available input source. **Notes:** When the desired source is selected, the Quick Auto Search function will be turn off.

SYSTEM SETUP: Advanced Menu

Press the **MENU** button to open the **OSD** menu. Press the cursor ◄► button to move to the **SYSTEM SETUP: Advanced** menu. Press the cursor ▲▼ button to move up and down in the **SYSTEM SETUP: Advanced** menu.

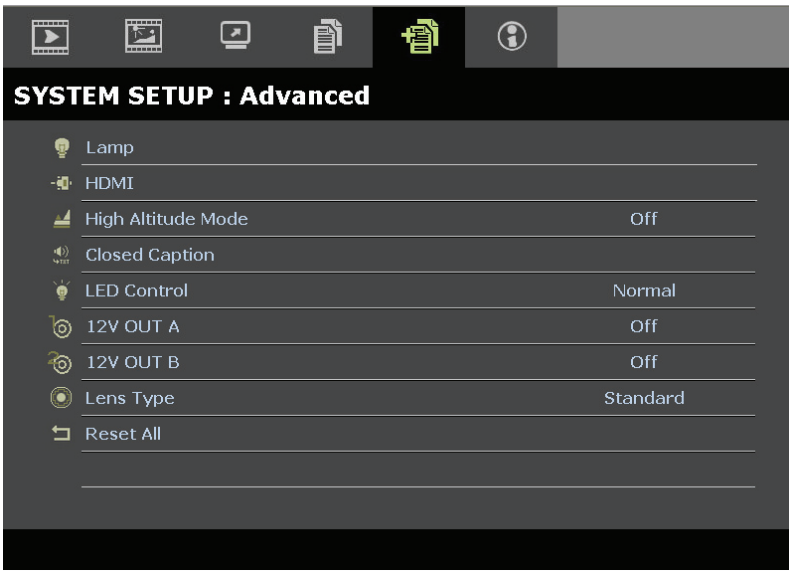

ITEM	DESCRIPTION
Lamp	Press the **ENTER** button to enter the **Lamp** sub menu. See *Lamp* on page 32.
HDMI	Press the **ENTER** button to enter the **HDMI** sub menu. See *HDMI* on page 32.
High Altitude Mode	Press the cursor ◄► buttons to turn on or off High Altitude Mode when the altitude of the environment is higher than 1500m, or the temperature is over 40°C.
Closed Caption	Press the **ENTER** button to enter the **Closed Caption** sub menu. See *Closed Caption* on page 33.
LED Control	Press the cursor ◄► buttons to select the LED control. Select **Normal** for normal LED display and Off to disable LED display.
12V OUT A	Press the cursor ◄► buttons to turn on or off 12V OUT A. When connected to the screen through a commercially available cable, the screen deploys automatically on start up of the projector. The screen retracts when the projector is powered off.
12V OUT B	Press the cursor ◄► buttons to turn on or off 12V OUT B.
Lens Type	Press the cursor ◄► buttons to select a lens type. (Range: Short / **Standard** / Long/)
Reset All	Press the **ENTER** button to enter reset all settings to default values.

Lamp

Press the **ENTER** button to enter the **Lamp** sub menu.

ITEM	DESCRIPTION
Lamp Mode	Press the ◄► buttons to adjust lamp brightness.
Reset Lamp Timer	Press the **ENTER** button to reset the Lamp Hour after the lamp is replaced.
Lamp Hour	Displays the number of hours the lamp has been in use.

HDMI

Press the **ENTER** button to enter the **HDMI** sub menu.

ITEM	DESCRIPTION
HDMI Format	Press the ◄► buttons to select from three HDMI display formats: Auto/ PC signal/ Video signal.
HDMI Amplifier Gain	Press the ◄► buttons to adjust HDMI Amplifier Gain.

Closed Caption

Press the **ENTER** button to enter the **Closed Caption** sub menu.

ITEM	DESCRIPTION
Closed Caption Enable	Press the ◄► buttons to turn on or off Closed Caption.
Caption Version	Press the ◄► buttons to select the Caption Version.

12V OUT A

Set **12V OUT A** to **On** to enable the projector to automatically lower the projection screen when powering on. When powering off, screen trigger stops sending a low voltage trigger to the screen controller and the screen goes up.

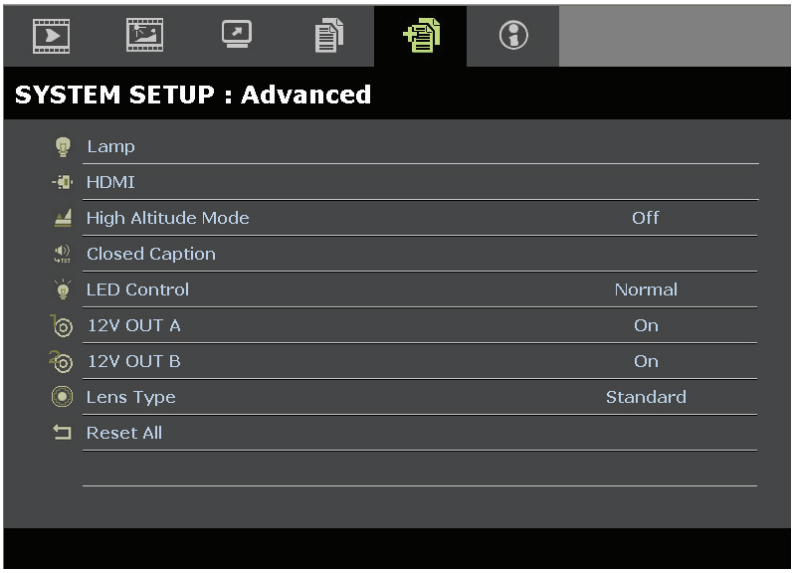

INFORMATION Menu

Press the **MENU** button to open the **OSD** menu. Press the cursor ◄► button to move to the **INFORMATION Menu**.

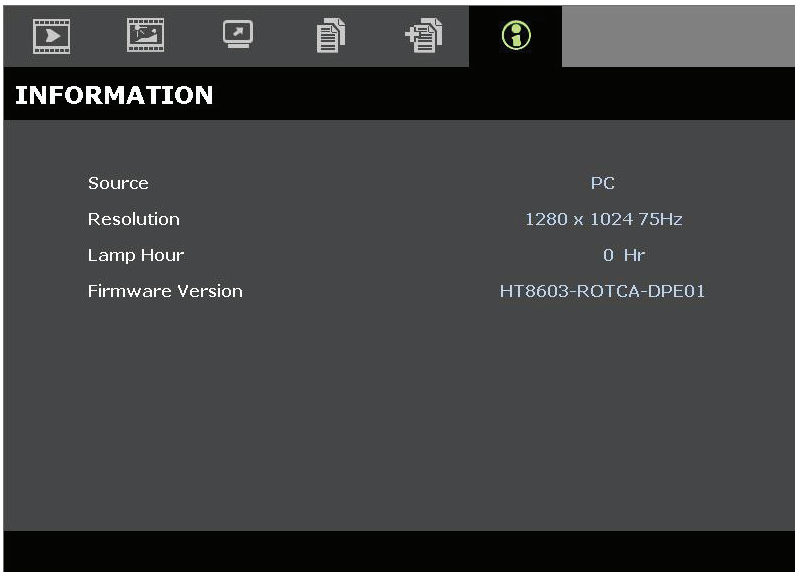

ITEM	DESCRIPTION
Source	Displays the activated input source.
Resolution	Displays the native resolution of input source.
Lamp Hour	Displays the number of hours the lamp has been in use.
Firmware Version	Displays the firmware version of the projector.

Note:
Information displayed in this menu is for viewing only and cannot be edited.

Replacing the Projection Lamp

The projection lamp should be replaced when it burns out. It should only be replaced with a certified replacement part, which you can order from your local dealer.

Important:
a. *The projection lamp used in this product contains a small amount of mercury.*

b. *Do not dispose this product with general household waste.*

c. *Disposal of this product must be carried out in accordance with the regulations of your local authority.*

Warning:
Be sure to turn off and unplug the projector at least 30 minutes before replacing the lamp. Failure to do so could result in a severe burn.

1. Switch off the power to the projector by pressing the POWER button.

2. Allow the projector to cool down at least 30 minutes.

3. Disconnect the power cord.

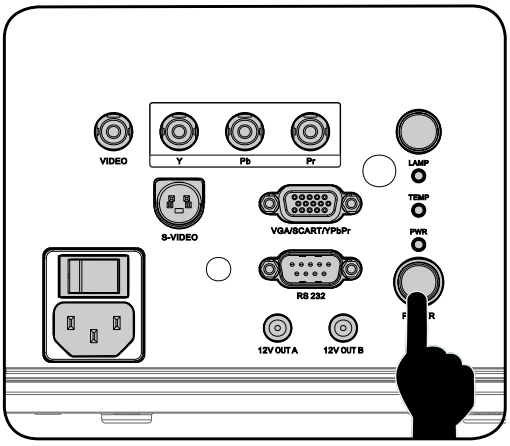

4. Unlock the lamp cover.

5. Pull up and remove the cover.

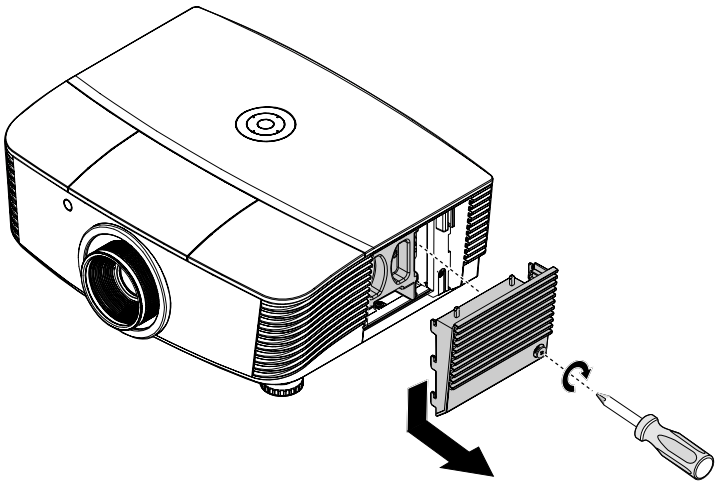

6. Use a screwdriver to remove the screws from the lamp module.

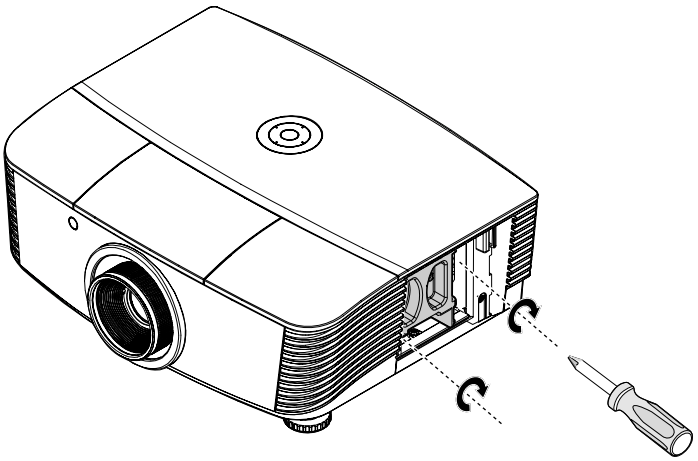

7. Pull out the lamp module.

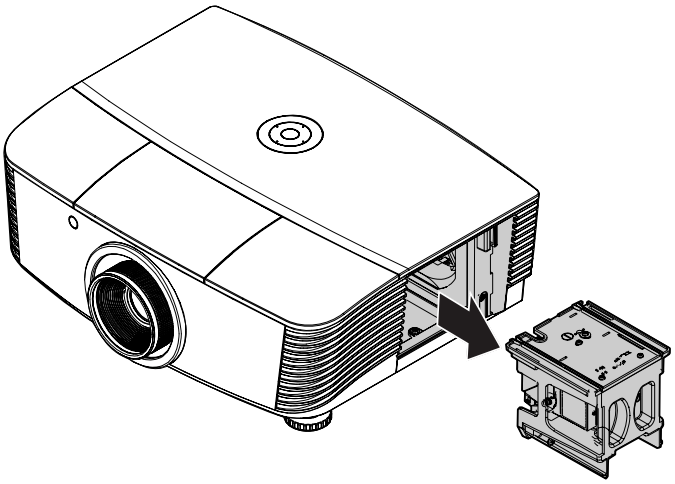

8. Reverse steps 1 to 7 to install the new lamp module. While installing, align the lamp module with the connector and ensure it is level to avoid damage.

> ***Note:***
> *The lamp module must sit securely in place and the lamp connector must be connected properly before tightening the screws.*

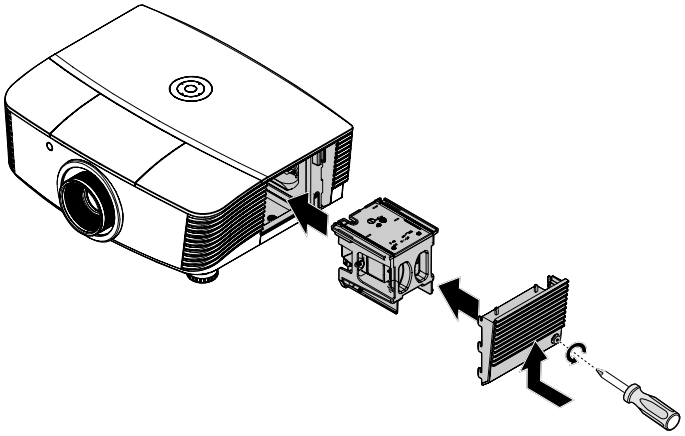

9. Turn on the projector and reset the lamp after the lamp module is replaced.

Lamp Reset:
Press **Menu** → Select **SYSTEM SETUP : Advanced** → Select **Lamp** → Select Lamp **Mode** or **Reset Lamp Timer** → Press the ◄► buttons to adjust the settings.

Cleaning the Projector

Cleaning the projector to remove dust and grime will help ensure trouble-free operation.

Warning:
1. *Be sure to turn off and unplug the projector at least 30 minutes before cleaning. Failure to do so could result in a severe burn.*

2. *Use only a dampened cloth when cleaning. Do not allow water to enter the ventilation openings on the projector.*

3. *If a little water gets into the projector interior while cleaning, leave unplugged in a well-ventilated room for several hours before using.*

4. *If a lot of water gets into the projector interior when cleaning, have the projector serviced.*

Cleaning the Lens

You can purchase optic lens cleaner from most camera stores. Refer to the following to clean the projector lens.

1. Apply a little optic lens cleaner to a clean soft cloth. (Do not apply the cleaner directly to the lens.)
2. Lightly wipe the lens in a circular motion.

Caution:
1. *Do not use abrasive cleaners or solvents.*

2. *To prevent discoloration or fading, avoid getting cleaner on the projector case.*

Cleaning the Case

Refer to the following to clean the projector case.

1. Wipe off dust with a clean dampened cloth.
2. Moisten the cloth with warm water and mild detergent (such as used to wash dishes), and then wipe the case.
3. Rinse all detergent from the cloth and wipe the projector again.

Caution:
To prevent discoloration or fading of the case, do not use abrasive alcohol-based cleaners.

Using the Physical Lock

Using the Kensington® Lock

If you are concerned about security, attach the projector to a permanent object with the Kensington slot and a security cable.

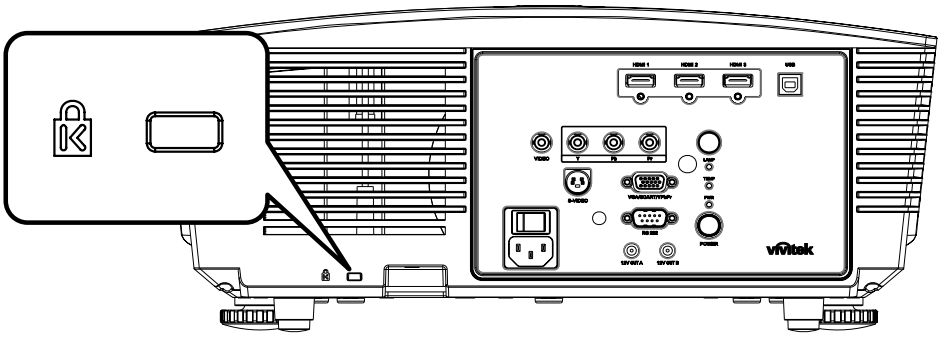

Note:
Contact your vendor for details on purchasing a suitable Kensington security cable.

The security lock corresponds to Kensington's MicroSaver Security System. If you have any comment, contact: Kensington, 2853 Campus Drive, San Mateo, CA 94403, U.S.A. Tel: 800-535-4242, http://www.Kensington.com.

Using the Security Chain Lock

In addition to the password protection function and the Kensington lock, the Security Chain Opening helps protect the HDP2300 from unauthorized use.

See the following picture.

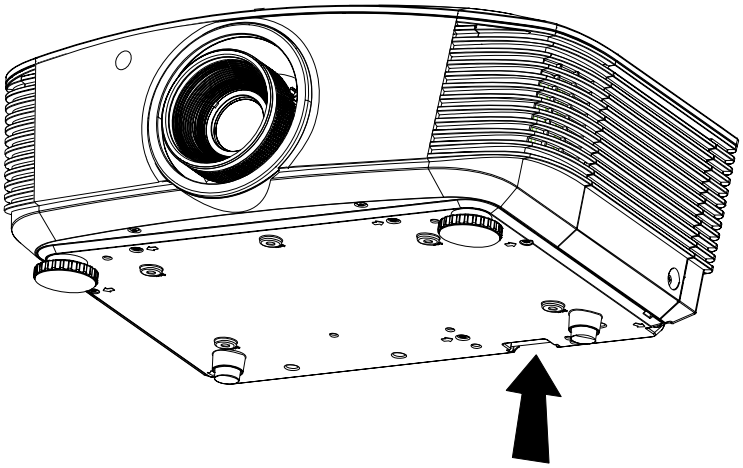

Common problems and solutions

These guidelines provide tips to deal with problems you may encounter while using the projector. If the problem remains unsolved, contact your dealer for assistance.

Often after time spent troubleshooting, the problem is traced to something as simple as a loose connection. Check the following before proceeding to the problem-specific solutions.

- *Use some other electrical device to confirm that the electrical outlet is working.*
- *Ensure the projector is turned on.*
- *Ensure all connections are securely attached.*
- *Ensure the attached device is turned on.*
- *Ensure a connected PC is not in suspending mode.*
- *Ensure a connected notebook computer is configured for an external display.*
  (This is usually done by pressing a Fn-key combination on the notebook).

Tips for Troubleshooting

In each problem-specific section, try the steps in the order suggested. This may help you to solve the problem more quickly.

Try to pin point the problem and thus avoid replacing non-defective parts.
For example, if you replace batteries and the problem remains, put the original batteries back and go to the next step.

Keep a record of the steps you take when troubleshooting: The information may be useful when calling for technical support or for passing on to service personnel.

LED Error Messages

Error Code Messages	Power LED Blink	Ready LED Blink	Temp LED Blink
Lamp Ready	ON	ON	OFF
Start	ON	OFF	OFF
Cooling	ON	FLASHING	OFF
Over temperature	OFF	OFF	ON
Thermal Break Sensor error	4	4	OFF
Lamp End of lamp life detected	5	3	OFF
Burner Fan error	6	1	OFF
Lamp Fan error	6	2	OFF
Power Fan error	6	3	OFF
DMD Fan error	6	4	OFF
Case Open	7	OFF	OFF
DMD error	8	OFF	OFF
Color wheel error	9	OFF	OFF

In the event of an error, please disconnect the AC power cord and wait for one (1) minute before re-starting the projector. If the POWER or LAMP LEDs are still blinking or the TEMP LED is lit, contact your service center.

Image Problems

Problem: No image appears on the screen

1. Verify the settings on your notebook or desktop PC.
2. Turn off all equipment and power up again in the correct order.

Problem: The image is blurred

1. Adjust the **Focus** on the projector.
2. Press the **Auto** button on the remote control or projector.
3. Ensure the projector-to-screen distance is within the 10-meter (33-feet) specified range.
4. Check that the projector lens is clean.

Problem: The image is wider at the top or bottom (trapezoid effect)

1. Position the projector so it is as perpendicular to the screen as possible.
2. Use the **Keystone** button on the remote control or projector to correct the problem.

Problem: The image is reversed

Check the **Projection** setting on the **Installation I** menu of the OSD.

Problem: The image is streaked

1. Set the **Frequency** and **Tracking** settings on the **Computer** menu of the OSD to the default settings.
2. To ensure the problem is not caused by a connected PC's video card, connect to another computer.

Problem: The image is flat with no contrast

Adjust the **Contrast** setting on the **Image** menu of the OSD.

Problem: The color of the projected image does not match the source image.

Adjust the **Color Temperature** and **Gamma** settings on the **Image** menu of the OSD.

Lamp Problems

Problem: There is no light from the projector

1. Check that the power cable is securely connected.
2. Ensure the power source is good by testing with another electrical device.
3. Restart the projector in the correct order and check that the Power LED is green.
4. If you have replaced the lamp recently, try resetting the lamp connections.
5. Replace the lamp module.
6. Put the old lamp back in the projector and have the projector serviced.

Problem: The lamp goes off

1. Power surges can cause the lamp to turn off. Re-plug power cord. When the READY LED is on, press the power button.
2. Replace the lamp module.
3. Put the old lamp back in the projector and have the projector serviced.

Remote Control Problems

Problem: The projector does not respond to the remote control

1. Direct the remote control towards remote sensor on the projector.
2. Ensure the path between remote and sensor is not obstructed.
3. Turn off any fluorescent lights in the room.
4. Check the battery polarity.
5. Replace the batteries.
6. Turn off other Infrared-enabled devices in the vicinity.
7. Have the remote control serviced.

Having the Projector Serviced

If you are unable to solve the problem, you should have the projector serviced. Pack the projector in the original carton. Include a description of the problem and a checklist of the steps you took when trying to fix the problem: The information may be useful to service personnel. For servicing, return the projector to the place you purchased it.

HDMI Q & A

Q. What is the difference between a "Standard" HDMI cable and a "High-Speed" HDMI cable?

Recently, HDMI Licensing, LLC announced that cables would be tested as Standard or High-Speed cables.

- Standard (or "category 1") HDMI cables have been tested to perform at speeds of 75Mhz or up to 2.25Gbps, which is the equivalent of a 720p/1080i signal.
- High Speed (or "category 2") HDMI cables have been tested to perform at speeds of 340Mhz or up to 10.2Gbps, which is the highest bandwidth currently available over an HDMI cable and can successfully handle 1080p signals including those at increased color depths and/or increased refresh rates from the Source. High-Speed cables are also able to accommodate higher resolution displays, such as WQXGA cinema monitors (resolution of 2560 x 1600).

Q. How do I run HDMI cables longer than 10 meters?

There are many HDMI Adopters working on HDMI solutions that extend a cable's effective distance from the typical 10 meter range to much longer lengths. These companies manufacture a variety of solutions that include active cables (active electronics built into cables that boost and extend the cable's signal), repeaters, amplifiers as well as CAT5/6 and fiber solutions.

Q. How can I tell if a cable is an HDMI certified cable?

All HDMI products are required to be certified by the manufacturer as part of the HDMI Compliance Test Specification. However, there may be instances where cables bearing the HDMI logo are available but have not been properly tested. HDMI Licensing, LLC actively investigates these instances to ensure that the HDMI trademark is properly used in the market. We recommend that consumers buy their cables from a reputable source and a company that is trusted.

For more detail information check http://www.hdmi.org/learningcenter/faq.aspx#49

Specifications

Model	**HDP2300 Series**		
Display type	TI DLP DMD 0.65”		
Native Resolution	1920 x 1080		
Weight	8.8 kg (19 lbs)		
Lens type	**Standard**	Long	Short
Projection distance	**1.5 meters ~ 7 meters**	2.meters ~ 20 meters	0.5 meters ~ 3 meters
Projection screen size	**37" ~ 300"**	31.2" ~ 468"	29.25" ~ 200"
Projection lens	**Manual Focus/ Manual Zoom**	Manual Focus/ Manual Zoom	Fix Zoom
Zoom ratio	**1.25**	1.5	Fix
Vertical keystone correction	+/- 15 degrees		
Projection methods	Front, Rear, Desktop/Ceiling (Rear, Front)		
Data compatibility	VGA, SVGA, XGA, SXGA, SXGA+, UXGA, Mac		
SDTV/ EDTV/ HDTV	480i, 576i, 576p, 480p, 720p, 1080i, 1080p		
Video compatibility	NTSC 4.43, PAL (M/N/60), SECAM		
H-Sync	15.31 – 90 kHz		
V-Sync	43 – 85 Hz		
Safety certification	FCC-B, UL, cUL, CB, CE, CCC, KC, PCT, and C-tick		
Operation temperature	5° ~ 40°C		
Dimensions	431 mm (W) x 181 mm (H) x 344 mm (D)		
AC Input	AC Universal 100 ~ 240, Typical @ 110VAC (100~240)/ ± 10%		
Power consumption	Standard mode: 310W/ Boost mode: 370W		
Stand By	<1 watt		
Lamp	280W		
Input Terminals	Digital: HDMI x 3		
	Analog: RGB HD-15 x 1		
	Composite: RCA x 1 (Yellow)		
	S-Video: mini dim x 1		
	Component: RCA x 3		
Control Terminals	RS-232		
	DC_out (screen trigger): DC Jack x 2 (DC12V 200mA output function)		
	Keyboard Emulation Control: USB connector type B		
Security	Kensington lock		

Projection Distance vs. Projection Size

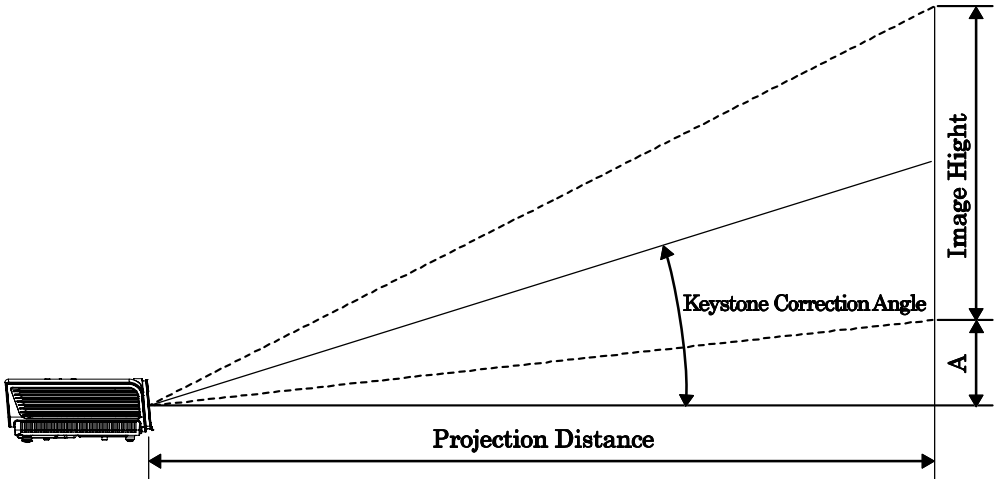

HDP2300 Series Projection Distance and Size Table

Standard projection lens: TR: 1.54 ~ 1.93

	TELE				WIDE			
Distance (m)	1.28	3.42	4.27	8.55	1.36	2.73	3.41	10.23
Diagonal (“)	30	80	100	200	40	80	100	300
Keystone Correction Angle (degree)	9.93	9.93	9.93	9.93	12.39	12.39	12.39	12.39
Image Height (mm)	373.6	996.2	1245.3	2490.5	498.1	996.2	1245.3	3735.8
Image Width (mm)	664.1	1771.0	2213.8	4427.6	885.5	1771.0	2213.8	6641.4
A (mm)	37.4	99.6	124.5	249.1	49.8	99.6	124.5	373.6

Long throw projection lens: TR: 1.93 ~ 2.89

	TELE				WIDE			
Distance (m)	3.20	5.12	6.40	25.59	2.14	3.42	4.27	19.23
Diagonal (“)	50	80	100	400	50	80	100	450
Keystone Correction Angle (degree)	6.66	6.66	6.66	6.66	9.9	9.9	9.9	9.9
Image Height (mm)	622.6	996.2	1245.3	4981.1	622.6	996.2	1245.3	5603.7
Image Width (mm)	1106.9	1771.0	2213.8	8855.2	1106.9	1771.0	2213.8	9962.1
A (mm)	62.3	99.6	124.5	498.1	62.3	99.6	124.5	560.4

Short throw projection lens: TR: 0.77

	FIX			
Distance (m)	0.5	1.4	3.0	3.4
Diagonal (“)	30	80	175	200
Keystone Correction Angle (degree)	24.1	24.1	24.1	24.1
Image Height (mm)	373.6	996.2	2179.2	2490.5
Image Width (mm)	664.1	1771.0	3874.2	4427.6
A (mm)	37.4	99.6	217.9	249.1

HDP2300 Series Timing Mode Table

The projector can display several resolutions. The following table outlines the resolutions that can be displayed by the projector.

SIGNAL	RESOLUTION	H-SYNC (KHZ)	V-SYNC (HZ)	COMPOSITE / S-VIDEO	COMPONENT	RGB (ANALOG)	HDMI (DIGITAL)
VGA	640 x 350	31.5	70.1	—	—	O	O
VESA (DMT)	640 x 350	37.9	85.1	—	—	O	O
	720 x 350	31.5	70.0	—	—	O	O
	640 x 400	37.9	85.1	—	—	O	O
	720 x 400	31.5	70.0	—	—	O	O
	720 x 400	37.9	85.0	—	—	O	O
	720 x 400	39.4	87.8	—	—	O	O
	640 x 480	37.5	75.0	—	—	O	O
	640 x 480	43.3	85.0	—	—	O	O
	800 x 600	48.1	72.2	—	—	O	O
	800 x 600	50.3	80	—	—	O	O
	800 x 600	53.7	85.1	—	—	O	O
	1024 x 576	29.6	50	—	—	O	O
	1024 x 576	35.8	60	—	—	O	O
	1024 x 768	60.0	75.0	—	—	O	O
	1024 x 768	68.7	85.0	—	—	O	O
	1152 x 864	54.3	60.0	—	—	O	O
	1152 x 864	63.9	70.0	—	—	O	O
	1152 x 864	67.5	75.0	—	—	O	O
	1152 x 864	77.5	85.0	—	—	O	O
	1280 x 720	37.5	50	—	—	O	O
	1280 x 720	45	60	—	—	O	O
	1280 x 1024	64.0	60.0	—	—	O	O
	1280 x 1024	80.0	75.0	—	—	O	O
	1280 x 1024	91.1	85.0	—	—	O	O
	1600 x 1200	75.0	60.0	—	—	O	O
	1920 x 1080i	33.8	60.0	—	—	O	O
	1920 x 1080i	28.1	50.0	—	—	O	O
	1920 x 1080p	27	24	—	—	O	O
	1920 x 1080p	56.25	50	—	—	O	O
	1920 x 1080p	67.5	60	—	—	O	O
CGA84	640 x 400	31.5	70.1	—	—	O	O
SMT	640 x 480	31.5	60.0	—	—	O	O
	640 x 480	34.9	66.6	—	—	O	O

SIGNAL	RESOLUTION	H-SYNC (KHZ)	V-SYNC (HZ)	COMPOSITE / S-VIDEO	COMPONENT	RGB (ANALOG)	HDMI (DIGITAL)
VESA	640 x 480	37.9	72.8	—	—	O	O
	800 x 600	35.2	56.3	—	—	O	O
	800 x 600	37.9	60.3	—	—	O	O
	800 x 600	46.9	75.0	—	—	O	O
	1024 x 768	48.4	60.0	—	—	O	O
	1024 x 768	56.5	70.1	—	—	O	O
	1024 x 768	57.7	72	—	—	O	O
DMT	1280 x 720	56.4	75	—	—	O	O
	1280 x 720	64.4	85	—	—	O	O
	1280 x 768	47.4	60.0	—	—	O	O
	1280 x 768	56	70.0	—	—	O	O
	1280 x 768	60.3	75.0	—	—	O	O
	1280 x 768	68.8	85.0	—	—	O	O
	1280 x 800	49.7	60	—	—	O	O
	1400 x 1050	64.7	60.0	—	—	O	O
	720 x 480i	15.8	60.0	—	—	O	O
	720 x480p	31.5	60.0	—	—	O	O
	720 x576i	15.6	50.0	—	—	O	O
	720 x 576p	31.3	50.0	—	—	O	O
	1280 x 720p	45.0	60.0	—	—	O	O
	1280 x 720p	37.5	50.0	—	—	O	O
CVT	1920 x 1200	74.0	60.0	—	—	O	O
Apple Macintosh	640 x 480	35.0	66.7	—	—	O	O
	832 x 624	49.7	74.5	—	—	O	O
	1024 x 768	60.2	74.9	—	—	O	O
	1152 x 870	68.7	75.1	—	—	O	O
NTSC/NTSC4.43	Chroma Sub-carrier Frequency, 3.58 MHz & 4.43 MHz			—	O	—	—
PAL	CCIR, Chroma Sub-carrier Frequency, 4.43 MHz			—	O	—	—
SECAM	CCIR Sub-carrier frequency, 4.25/4.4 MHz			—	O	—	—
SDTV	480i	15.8	60.0	O	—	—	O
	576i	15.6	50.0	O	—	—	O
EDTV	480p	31.5	60.0	O	—	—	O
	576p	31.3	50.0	O	—	—	O

SIGNAL	RESOLUTION	H-SYNC (KHZ)	V-SYNC (HZ)	COMPOSITE / S-VIDEO	COMPONENT	RGB (ANALOG)	HDMI (DIGITAL)
HDTV	720p	45.0	60.0	O	—	—	O
	720p	37.5	50.0	O	—	—	O
	1080i	33.8	60.0	O	—	—	O
	1080i	28.1	50.0	O	—	—	O
	1080p	27	24	O	—	—	O
	1080p	28.125	25	O	—	—	O
	1080p	33.75	30	O	—	—	O
	1080p	56.25	50	O	—	—	O
	1080p	67.5	60	O	—	—	O

O: Frequency supported

—: Frequency not supported

The native resolution of the panel for the HDP2300 series is 1920 x 1080.
Resolution other than native resolution may display with uneven size of text or lines.

Projector Dimensions

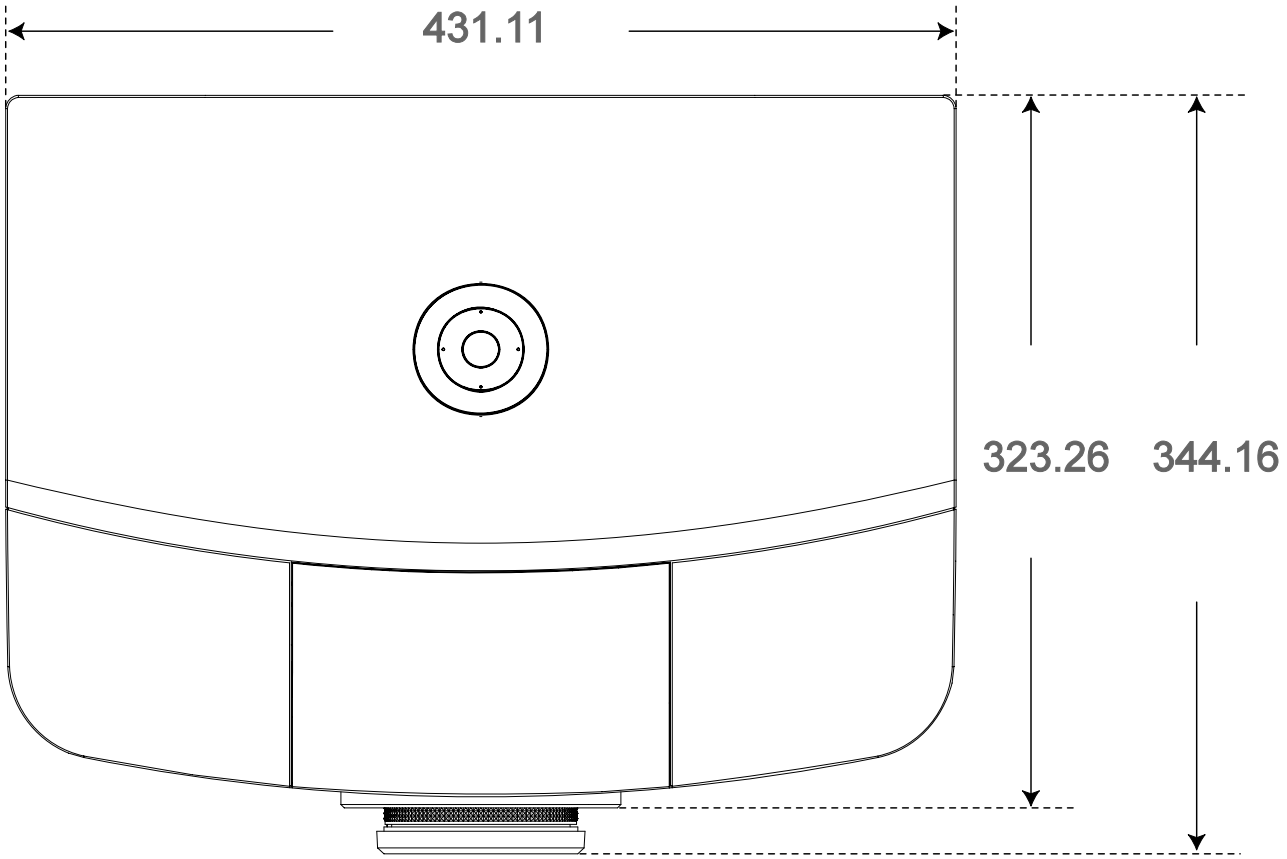

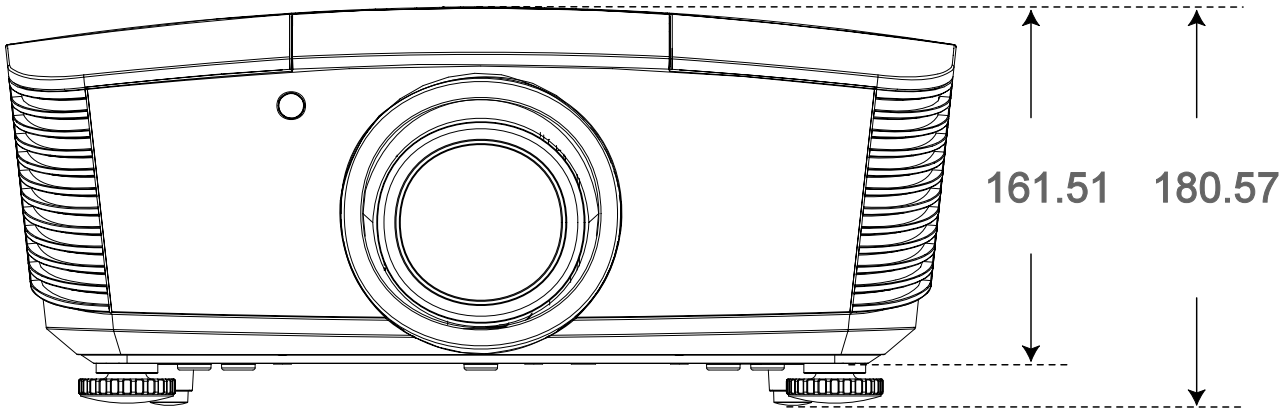

FCC Warning

This equipment has been tested and found to comply with the limits for a Class B digital device pursuant to Part 15 of the FCC Rules. These limits are designed to provide reasonable protection against harmful interference when the equipment is operated in a commercial environment.

This equipment generates, uses, and can radiate radio frequency energy and, if not installed and used in accordance with the instruction manual, may cause harmful interference to radio communications. Operation of this equipment in a residential area is likely to cause harmful interference in which case the user will be required to correct the interference at his/her own expense.

Changes or modifications not expressly approved by the parties responsible for compliance could void the user's authority to operate the equipment.

Canada

This class B digital apparatus complies with Canadian ICES-003.

Safety Certifications

FCC-B, UL, cUL, CB, CE, CCC, KC, PCT, and C-tick

EN 55022 Warning

This is a Class B product. In a domestic environment, it may cause radio interference, in which case the user may be required to take adequate measures. The typical use is in a conference room, meeting room, or auditorium.