myprojectorlamps.com

The most trusted, dependable name in projector lamp sales.

http://www.myprojectorlamps.com

http://www.myprojectorlamps.ca

http://www.myprojectorlamps.eu

The following projector manual has not been modified or altered in any way.

PROJECTOR
User's Manual

HDP2100 High Definition Projector

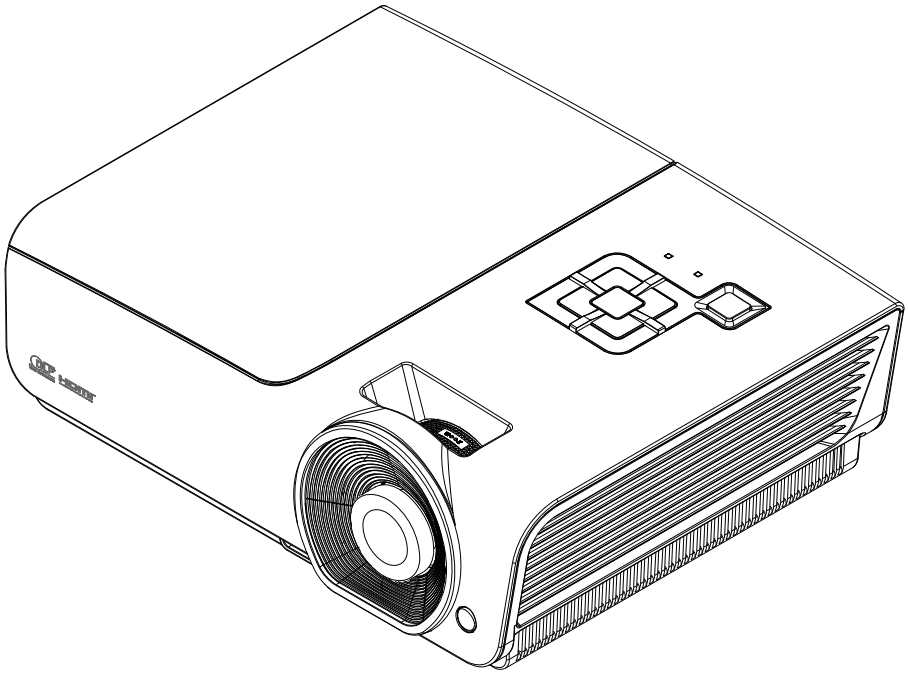

Copyright

This publication, including all photographs, illustrations and software, is protected under international copyright laws, with all rights reserved. Neither this manual, nor any of the material contained herein, may be reproduced without written consent of the author.

© Copyright 2010

Disclaimer

The information in this document is subject to change without notice. The manufacturer makes no representations or warranties with respect to the contents hereof and specifically disclaims any implied warranties of merchantability or fitness for any particular purpose. The manufacturer reserves the right to revise this publication and to make changes from time to time in the content hereof without obligation of the manufacturer to notify any person of such revision or changes.

Trademark Recognition

Kensington is a U.S. registered trademark of ACCO Brand Corporation with issued registrations and pending applications in other countries throughout the world.

All other product names used in this manual are the properties of their respective owners and are acknowledged.

Important Safety Information

> ***Important:***
> *It is strongly recommended that you read this section carefully before using the projector. These safety and usage instructions will ensure that you enjoy many years of safe use of the projector. Keep this manual for future reference.*

Symbols Used

Warning symbols are used on the unit and in this manual to alert you of hazardous situations.

The following styles are used in this manual to alert you to important information.

> ***Note:***
> *Provides additional information on the topic at hand.*

> ***Important:***
> *Provides additional information that should not be overlooked.*

> ***Caution:***
> *Alerts you to situations that may damage the unit.*

> ***Warning:***
> *Alerts you to situations that may damage the unit, create a hazardous environment, or cause personal injury.*

Throughout this manual, component parts and items in the OSD menus are denoted in bold font as in this example:
"Push the **MENU** button on the remote control to open the **DISPLAY** menu."

General Safety Information

- Do not open the unit case. Aside from the projection lamp, there are no user-serviceable parts in the unit. For servicing, contact qualified service personnel.
- Follow all warnings and cautions in this manual and on the unit case.
- The projection lamp is extremely bright by design. To avoid damage to eyes, do not look into the lens when the lamp is on.
- Do not place the unit on an unstable surface, cart, or stand.
- Avoid using the system near water, in direct sunlight, or near a heating device.
- Do not place heavy objects such as books or bags on the unit.

Projector Installation Notice

- Place the projector in a horizontal position
  The tilt angle of the projector should not exceed 15 degrees, nor should the projector be installed in any way other than the desktop and ceiling mount, otherwise lamp life could decrease dramatically.

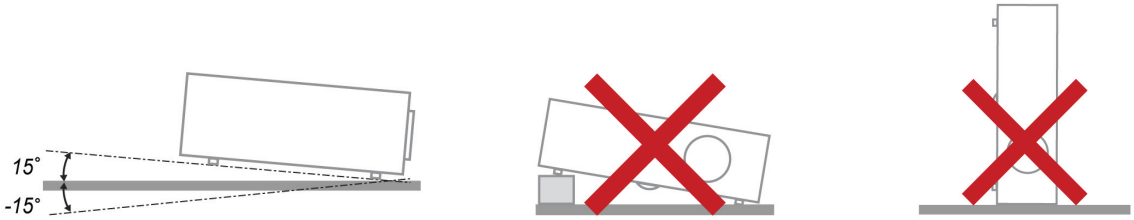

- Allow at least 50 cm clearance around the exhaust vent.

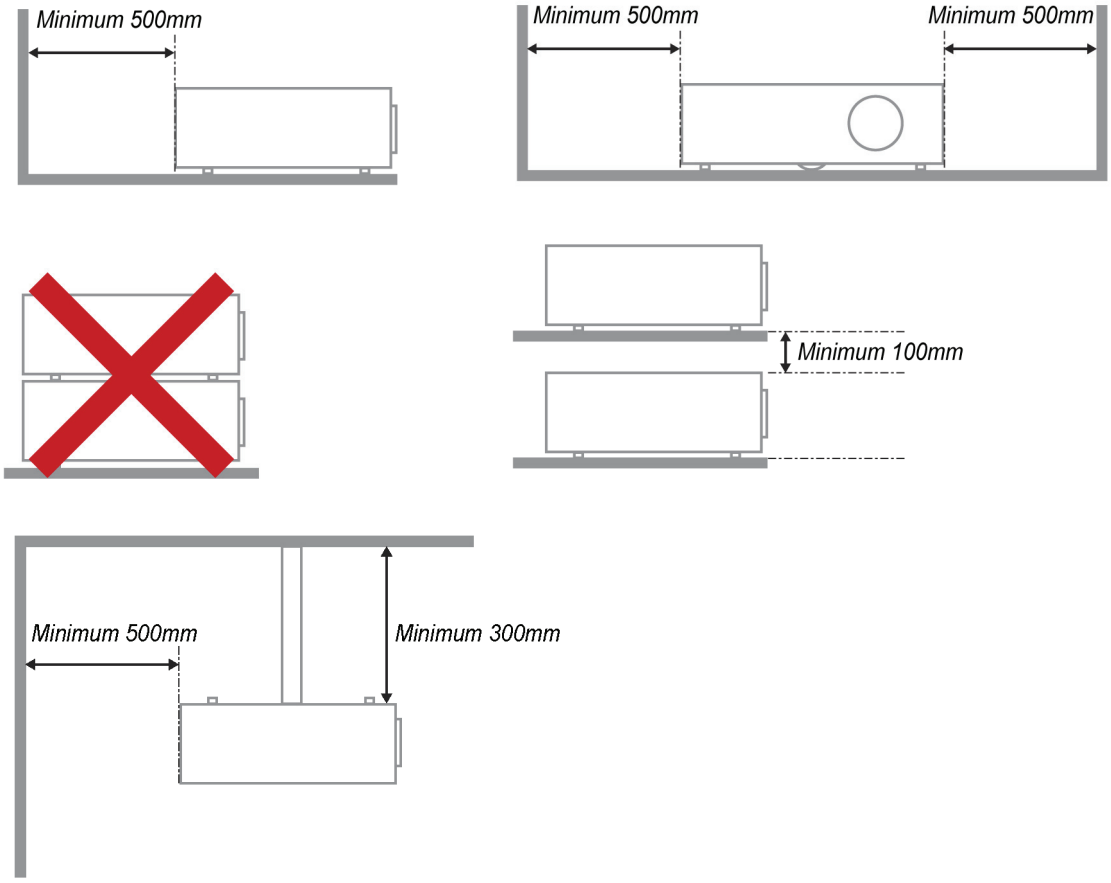

- Ensure that the intake vents do not recycle hot air from the exhaust vent.
- When operating the projector in an enclosed space, ensure that the surrounding air temperature within the enclosure does not exceed 5 – 35°C while the projector is running, and the air intake and exhaust vents are unobstructed.
- All enclosures should pass a certified thermal evaluation to ensure that the projector does not recycle exhaust air, as this may cause the device to shutdown even if the enclosure temperature is with the acceptable 5 – 35°C range.

Power Safety

- Only use the supplied power cord.
- Do not place anything on the power cord. Place the power cord where it will not be in the way of foot traffic.
- Remove the batteries from the remote control when storing or not in use for a prolonged period.

Replacing the Lamp

Replacing the lamp can be hazardous if done incorrectly. See *Replacing the Projection Lamp* on page 30 for clear and safe instructions for this procedure. Before replacing the lamp:

- Unplug the power cord.
- Allow the lamp to cool for about one hour.

Cleaning the Projector

- Unplug the power cord before cleaning. See *Cleaning the Projector* on page 32.
- Allow the lamp to cool for about one hour.

Regulatory Warnings

Before installing and using the projector, read the regulatory notices in the *Regulatory Compliance* section on page 43.

Important Recycle Instructions:

Hg Lamp(s) inside this product contain mercury. This product may contain other electronic waste that can be hazardous if not disposed of properly. Recycle or dispose in accordance with local, state, or federal Laws. For more information, contact the Electronic Industries Alliance at WWW.EIAE.ORG. For lamp specific disposal information check WWW.LAMPRECYCLE.ORG.

Symbol Explanations

DISPOSAL: Do not use household or municipal waste collection services for disposal of electrical and electronic equipment. EU countries require the use of separate recycling collection services.

Main Features

- *Lightweight unit, easy to pack away and transport.*
- *Compatible with all major video standards including NTSC, PAL, and SECAM.*
- *A high brightness rating allows for presentations in daylight or in lit rooms.*
- *Supports resolutions up to SXGA+ at 16.7 million colors to deliver crisp, clear images.*
- *Flexible setup allows for front, rear projections.*
- *Line-of-vision projections remain square, with advanced keystone correction for angled projections.*
- *Input source automatically detected.*

About this manual

This manual is intended for end users and describes how to install and operate the DLP projector. Wherever possible, relevant information—such as an illustration and its description—has been kept on one page. This printer-friendly format is both for your convenience and to help save paper, thereby protecting the environment. It is suggested that you only print sections that are relevant to your needs.

Table of Contents

GETTING STARTED **1**

PACKING CHECKLIST 1
VIEWS OF PROJECTOR PARTS 2
HDP2100 Front-right View *2*
Top view—On-screen Display (OSD) buttons and LEDs *3*
Rear view *4*
Bottom view *5*
REMOTE CONTROL PARTS 6
REMOTE CONTROL OPERATING RANGE 8
PROJECTOR AND REMOTE CONTROL BUTTONS 8

SETUP AND OPERATION **9**

INSERTING THE REMOTE CONTROL BATTERIES 9
CONNECTING INPUT DEVICES 10
STARTING AND SHUTTING DOWN THE PROJECTOR 11
ADJUSTING THE PROJECTOR LEVEL 13
ADJUSTING THE ZOOM RING, FOCUS AND KEYSTONE 14
ADJUSTING THE VOLUME 15

ON-SCREEN DISPLAY (OSD) MENU SETTINGS **16**

OSD MENU CONTROLS 16
Navigating the OSD *16*
SETTING THE OSD LANGUAGE 17
OSD MENU OVERVIEW 18
PICTURE: BASIC MENU 19
PICTURE: ADVANCED MENU 20
HSG Adjustment *21*
DISPLAY MENU 22
PC Detail Adjustment *23*
SYSTEM SETUP: BASIC MENU 24
Menu Settings *25*
Source *25*
SYSTEM SETUP: ADVANCED MENU 26
Audio *27*
Lamp *27*
HDMI *28*
Closed Caption *28*
INFORMATION MENU 29

MAINTENANCE AND SECURITY **30**

REPLACING THE PROJECTION LAMP 30
CLEANING THE PROJECTOR 32
Cleaning the Lens *32*
Cleaning the Case *32*
USING THE KENSINGTON® LOCK 33

TROUBLESHOOTING **34**

COMMON PROBLEMS AND SOLUTIONS 34
TIPS FOR TROUBLESHOOTING 34
LED ERROR MESSAGES 35
IMAGE PROBLEMS 35
LAMP PROBLEMS 36
REMOTE CONTROL PROBLEMS 36
AUDIO PROBLEMS 37
HAVING THE PROJECTOR SERVICED 37

SPECIFICATIONS **38**

SPECIFICATIONS 38

PROJECTION DISTANCE VS. PROJECTION SIZE 39
HDP2100 Series Projection Distance and Size Table 39
HDP2100 SERIES TIMING MODE TABLE 40
PROJECTOR DIMENSIONS 42

REGULATORY COMPLIANCE 43

FCC WARNING 43
CANADA 43
SAFETY CERTIFICATIONS 43
EN 55022 WARNING 43

GETTING STARTED

Packing Checklist

Carefully unpack the projector and check that the following items are included:

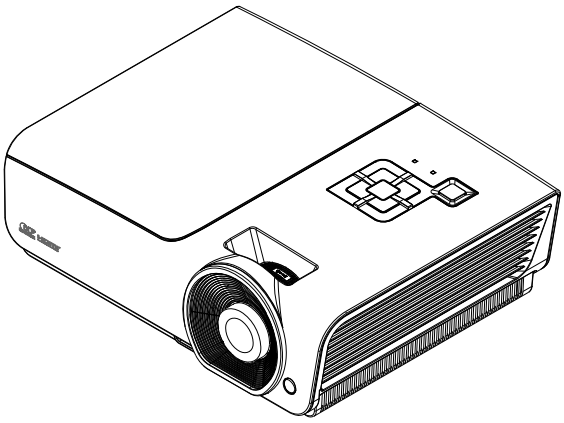

HDP2100 SERIES DLP PROJECTOR

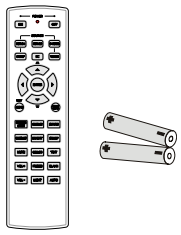

REMOTE CONTROL
(WITH TWO AA BATTERIES)

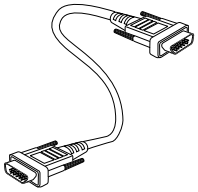

VGA CABLE

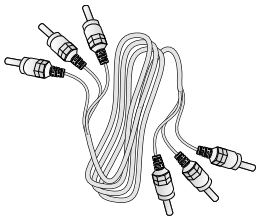

COMPONENT CABLE

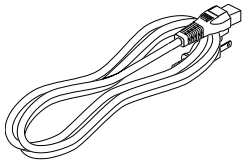

POWER CORD

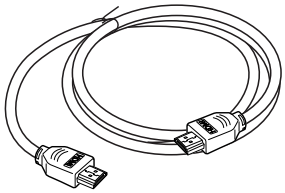

HDMI CABLE

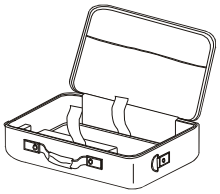

CARRYING CASE

CD-ROM
(THIS USER'S MANUAL)

WARRANTY CARD

Contact your dealer immediately if any items are missing, appear damaged, or if the unit does not work. It is recommend that you keep the original packing material should you ever need to return the equipment for warranty service.

Caution:
Avoid using the projector in dusty environments.

Views of Projector Parts

HDP2100 Series Front-right View

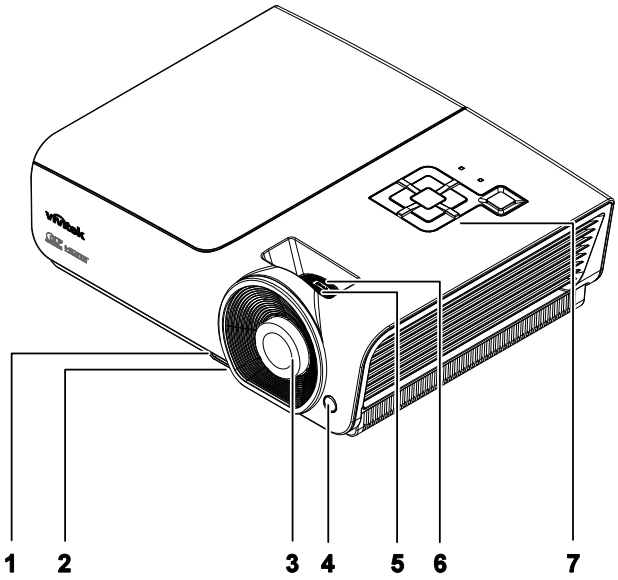

ITEM	LABEL	DESCRIPTION	SEE PAGE:
1.	Height-adjuster button	Push to release height adjuster	*13*
2.	Height adjuster	Adjusts level of projector	
3.	Lens	Projection Lens	
4.	IR receiver	Receive IR signal from remote control	*6*
5.	Focus ring	Focuses the projected image	*14*
6.	Zoom ring	Enlarges the projected image	
7.	Function keys	See Top view—On-screen Display (OSD) buttons and LEDs.	*3*

Important:
Ventilation openings on the projector allow for good air circulation, which keeps the projector lamp cool. Do not obstruct any of the ventilation openings.

Top view—On-screen Display (OSD) buttons and LEDs

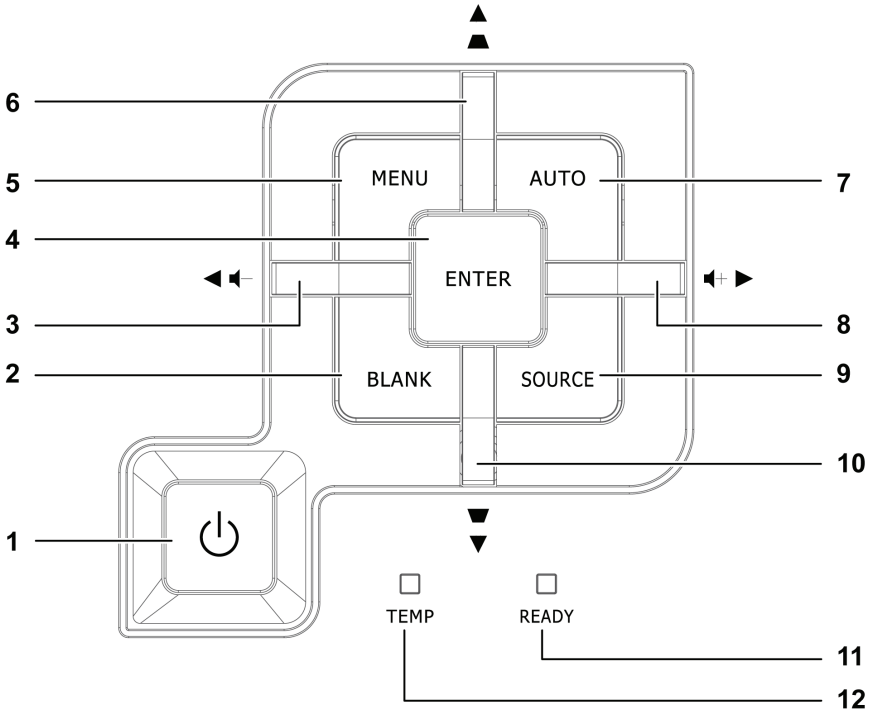

ITEM	LABEL	DESCRIPTION		SEE PAGE:
1.	⏻ (Power button)	Turns the projector On or Off.		***11***
2.	BLANK	Displays a blank screen and mutes audio		
3.	◄ (Left cursor) / Volume-	Navigates and changes settings in the OSD Quick Menu – For Volume		***16***
4.	Enter	Enter or confirm highlighted OSD menu item		
5.	MENU	Opens and exits OSD menus		
6.	▲ (Up cursor) / Keystone+	Navigates and changes settings in the OSD Quick Menu – For Keystone		
7.	AUTO	Optimizes image size, position, and resolution		
8.	► (Right cursor) / Volume+	Navigates and changes settings in the OSD Quick Menu – For Volume		***16***
9.	SOURCE	Enter the Source menu		***10***
10.	▼ (Down cursor) / Keystone-	Navigates and changes settings in the OSD Quick Menu – For Keystone		***16***
11.	READY LED	Red	Lamp is ready to be powered-on.	
		Flashing	Lamp is not ready (warming up/shutting down/cooling) (see *LED Error Messages* on page 35)	
12.	TEMP LED	Flashing	Error code	

Rear view

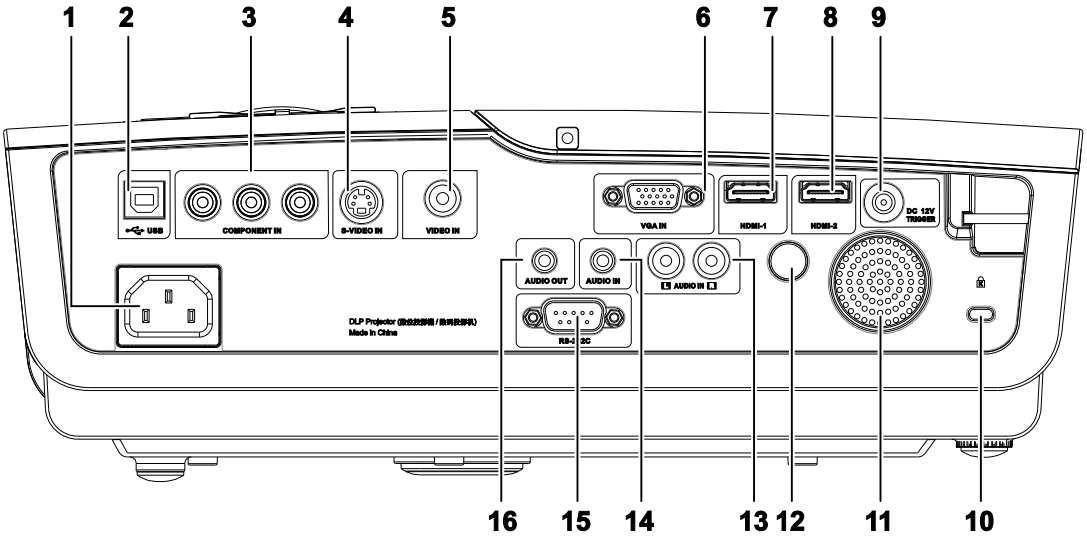

ITEM	LABEL	DESCRIPTION	SEE PAGE:
1.	AC IN	Connect the POWER CABLE	***11***
2.	(USB)	Connect the USB CABLE from a computer	***10***
3.	COMPONENT IN	Connect a component video enabled device	
4.	S-VIDEO IN	Connect the S-VIDEO CABLE from a video device	
5.	VIDEO IN	Connect the COMPOSITE CABLE from a video device	
6.	VGA IN	Connect the RGB CABLE from a computer and components	
7.	HDMI – 1	Connect the HDMI CABLE from a HDMI device	
8.	HDMI – 2	Connect the HDMI CABLE from a HDMI device	
9.	DC 12V	Connect the 12V OUT	
10.	Kensington Lock	Secure to permanent object with a Kensington® Lock system	***33***
11.	Speaker	Outputs audio sound	***10***
12.	IR receiver	Receive IR signal from remote control	***6***
13.	AUDIO IN (L and R)	Connect the AUDIO CABLES from a audio device	***10***
14.	AUDIO IN	Connect an AUDIO CABLE from the input device	
15.	RS-232C	Connect RS-232 serial port cable for remote control	
16.	AUDIO OUT	Connect an AUDIO CABLE for audio loop through	

Note:
If your video equipment has various input sources, it is recommended to connect in priority of HDMI, component (thru VGA), S-Video, Composite for better picture quality.

Bottom view

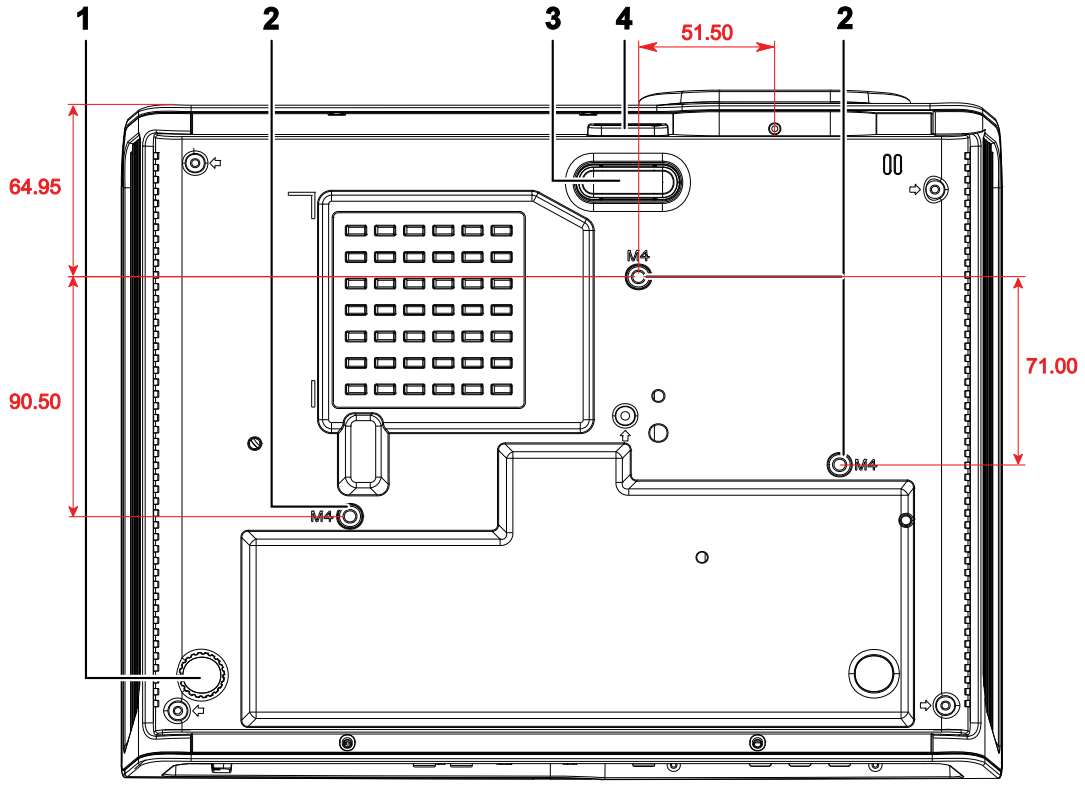

ITEM	LABEL	DESCRIPTION	SEE PAGE:
1.	Tilt adjustor	Rotate adjuster lever to adjust angle position.	*13*
2.	Ceiling support holes	Contact your dealer for information on mounting the projector on a ceiling	
3.	Height adjustor	Adjuster drops down when adjuster button is pushed.	*13*
4.	Height adjustor button	Push to release adjustor.	

Note:
When installing, ensure that you use only UL Listed ceiling mounts.
For ceiling installations, use approved mounting hardware and M4 screws with a maximum screw depth of 6 mm (0.23 inch).
The construction of the ceiling mount must be of a suitable shape and strength. The ceiling mount load capacity must exceed the weight of the installed equipment, and as an additional precaution be capable of withstanding three times the weight of the equipment (not less than 5.15 kg) over a period of 60 seconds.

Remote Control Parts

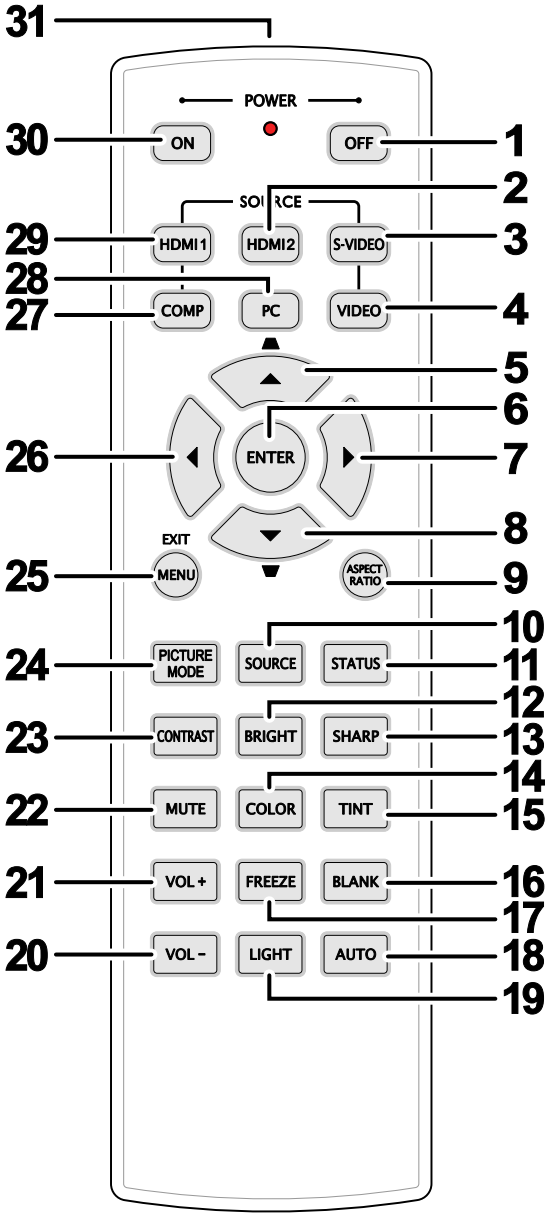

Important:
1. *Avoid using the projector with bright fluorescent lighting turned on. Certain high-frequency fluorescent lights can disrupt remote control operation.*

2. *Be sure nothing obstructs the path between the remote control and the projector. If the path between the remote control and the projector is obstructed, you can bounce the signal off certain reflective surfaces such as projector screens.*

3. *The buttons and keys on the projector have the same functions as the corresponding buttons on the remote control. This user's manual describes the functions based on the remote control.*

ITEM	LABEL	DESCRIPTION	SEE PAGE:
1.	Power OFF	Turns the projector off	***11***
2.	HDMI 2	Displays the HDMI 2 source selection	
3.	S-VIDEO	Displays the S-VIDEO source selection	
4.	VIDEO	Displays the VIDEO source selection	
5.	Up cursor / Keystone+	Navigates and changes settings in the OSD Quick Menu – For Keystone	***16***
6.	ENTER	Enters and confirms settings in the OSD	
7.	Right cursor	Navigates and changes settings in the OSD	
8.	Down cursor		
9.	ASPECT RATIO	Displays the ASPECT RATIO selections	
10.	SOURCE	Detects the input device	
11.	STATUS	Opens the OSD Status menu (the menu only opens when an input device is detected)	***16***
12.	BRIGHT	Displays the brightness setting bar	
13.	SHARP	Displays the sharpness setting bar	
14.	COLOR	Displays the color setting bar	
15.	TINT	Displays the tint setting bar	
16.	BLANK	Makes the screen blank	
17.	FREEZE	Freezes/unfreezes the on-screen picture	
18.	AUTO	Auto adjustment for frequency, phase, and position	
19.	LIGHT	Turns on or off the remote control backlight for about 10 seconds. Pressing any other key while the backlight is on keeps the backlight on for a further 10 seconds.	
20.	VOL -	Adjusts volume	***16***
21.	VOL +		
22.	MUTE	Mutes the built-in speaker	
23.	CONTRAST	Displays the contrast settings bar	
24.	PICTURE MODE	Changes the Display Mode setting	
25.	MENU/ EXIT	Opens and exits the OSD	***16***
26.	Left cursor	Navigates and changes settings in the OSD	
27.	COMP	Displays the Component source selection	
28.	PC	Displays the PC source selection	
29.	HDMI 1	Displays the HDMI 1 source selection	
30.	Power ON	Turns the projector on	***11***
31.	IR transmitter	Transmits signals to projector	

Remote Control Operating Range

The remote control uses infrared transmission to control the projector. It is not necessary to point the remote directly at the projector. Provided you are not holding the remote perpendicular to the sides or the rear of the projector, the remote will function well within a radius of about 7 meters (23 feet) and 15 degrees above or below the projector level. If the projector does not respond to the remote control, move a little closer.

Projector and Remote Control Buttons

The projector can be operated using the remote control or the buttons on the top of the projector. All operations can be carried out with the remote control; however, the buttons on the projector are limited in use.

Inserting the Remote Control Batteries

1. Remove the battery compartment cover by sliding the cover in the direction of the arrow.

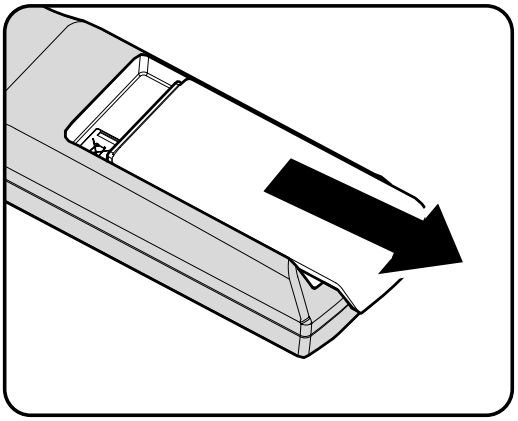

2. Insert the battery with the positive side facing up.

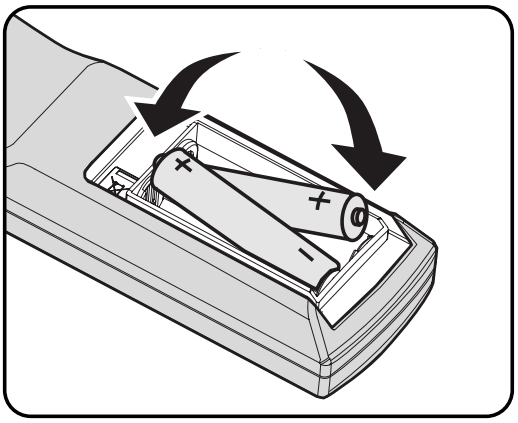

3. Replace the cover.

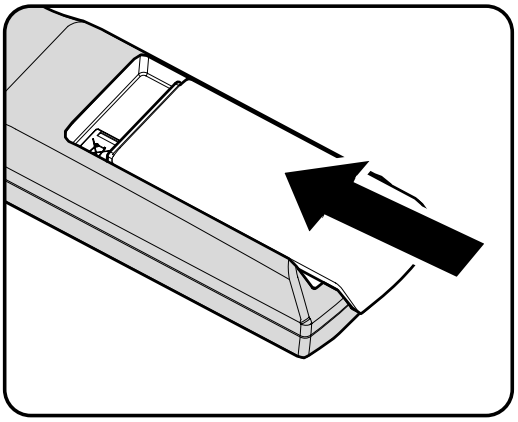

Caution:
1. *Only use AA batteries (Alkaline batteries are recommended).*

2. *Dispose of used batteries according to local ordinance regulations.*

3. *Remove the batteries when not using the projector for prolonged periods.*

Connecting Input Devices

A PC or notebook computer and video devices can be connected to the projector at the same time. Video devices include DVD, VCD, and VHS players, as well as movie camcorders and digital still cameras. Check the user manual of the connecting device to confirm it has the appropriate output connector.

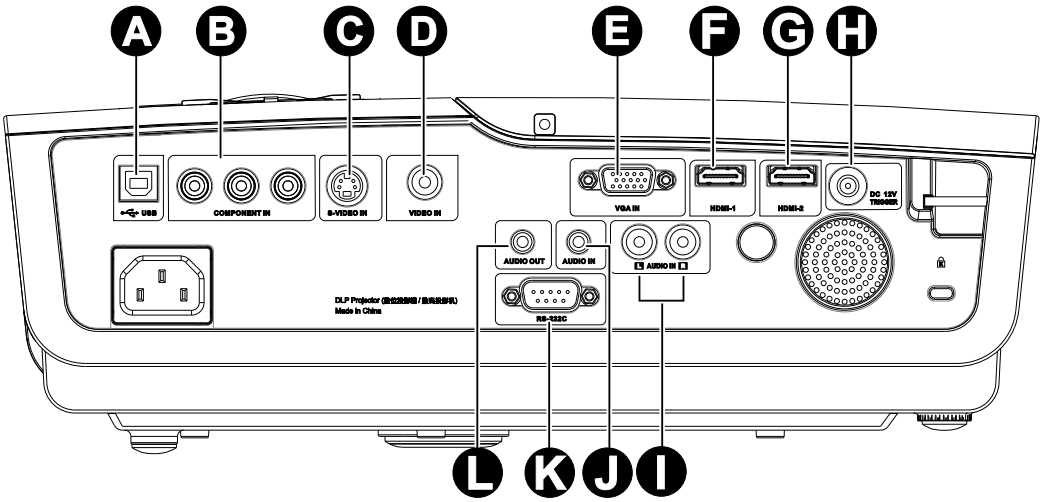

ITEM	LABEL	DESCRIPTION
A	(USB)	Connect the USB cable from a computer
B	COMPONENT IN	Connect a component video enabled device
C	S-VIDEO IN	Connect the S-VIDEO cable from a video device
D	VIDEO IN	Connect the COMPOSITE cable from a video device
E	VGA IN	Connect the RGB cable from a computer and components
F	HDMI – 1	Connect the HDMI cable from a HDMI device
G	HDMI – 2	
H	DC 12V	Connect the 12V OUT
I	AUDIO IN (L and R)	Connect the AUDIO cables from a audio device
J	AUDIO IN	Connect an AUDIO cable from the input device
K	RS-232C	Connect RS-232 serial port cable for remote control
L	AUDIO OUT	Connect an AUDIO cable for audio loop through

Warning:
As a safety precaution, disconnect all power to the projector and connecting devices before making connections.

Starting and Shutting down the Projector

1. Connect the power cord to the projector. Connect the other end to a wall outlet. The ⏻ **POWER** LED will be on.

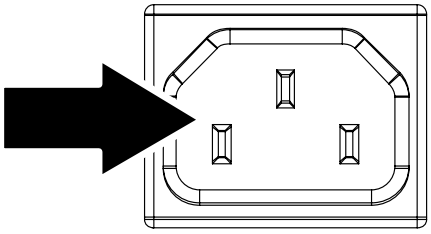

2. Turn on the connected devices.

3. Ensure the ⏻ **POWER** LED displays a solid blue and not a flashing blue. Then press the ⏻ **POWER** button to turn on the projector.

The projector splash screen displays and connected devices are detected.

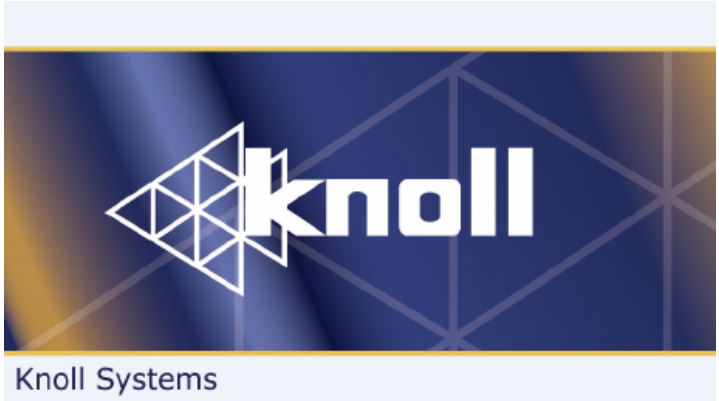

4. If more than one input device is connected, press the **SOURCE** button and use ▲▼ to scroll among devices. (Component is supported through the RGB to COMPONENT ADAPTER.)

- PC: Analog RGB
- HDMI 1/2: High Definition Multimedia Interface
- Component: DVD input YCbCr / YPbPr, or HDTV input YPbPr via HD15 connector
- S-Video: Super video (Y/C separated)
- Video: Traditional composite video

5. When the POWER OFF window appears, press ⏻ on the control panel or OFF on the remote control. The projector turns off.

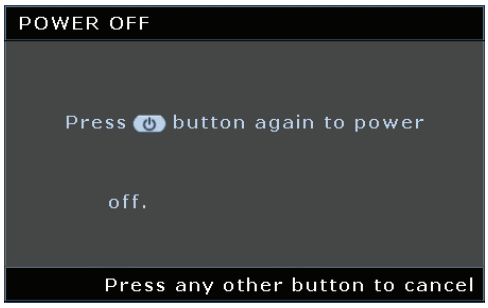

Caution:
Do not unplug the power cord until the READY LED stops flashing–indicating the projector has cooled down.

Adjusting the Projector Level

Take note of the following when setting up the projector:

- *The projector table or stand should be level and sturdy.*
- *Position the projector so that it is perpendicular to the screen.*
- *Remove the Back Foot Holder on the rear adjuster foot before adjusting the projection angle.*
- *Ensure the cables are in a safe location. You could trip over them.*

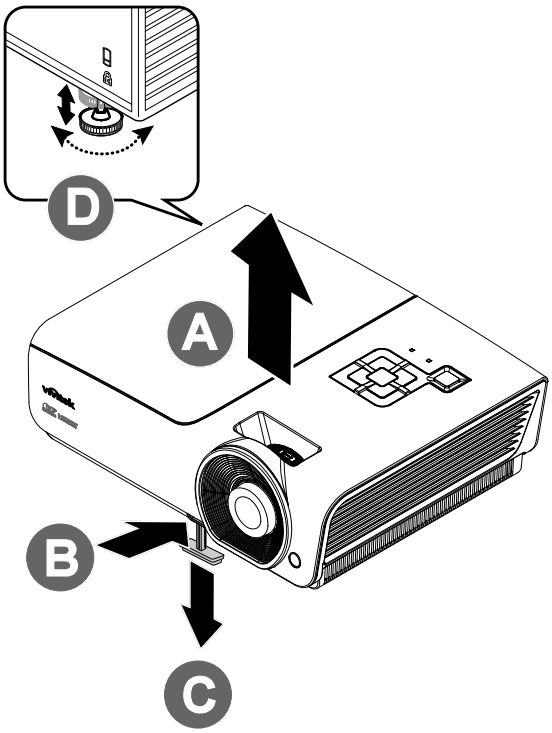

1. To raise the level of the projector, lift the projector **[A]** and press the height-adjuster button **[B]**.

   The height adjuster drops down **[C]**.

2. To lower the level of the projector, press the height-adjuster button and push down on the top of the projector.

3. To adjust the angle of the picture, turn the tilt-adjuster **[D]** right or left until the desired angle has been achieved.

Adjusting the Zoom ring, Focus and Keystone

1. Use the **Image-zoom** control (on the projector only) to resize the projected image and screen size B.

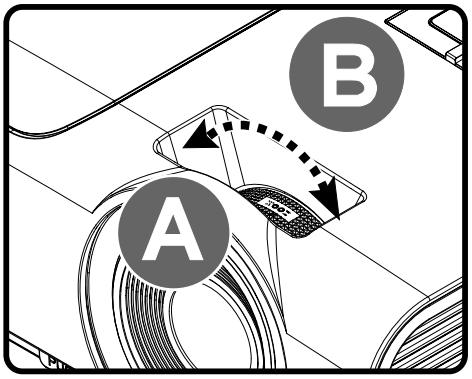

2. Use the **Image-focus** control (on the projector only) to sharpen the projected image A.

3. Use the **KEYSTONE** buttons (on the projector or the remote control) to correct image-trapezoid (wider top or bottom) effect.

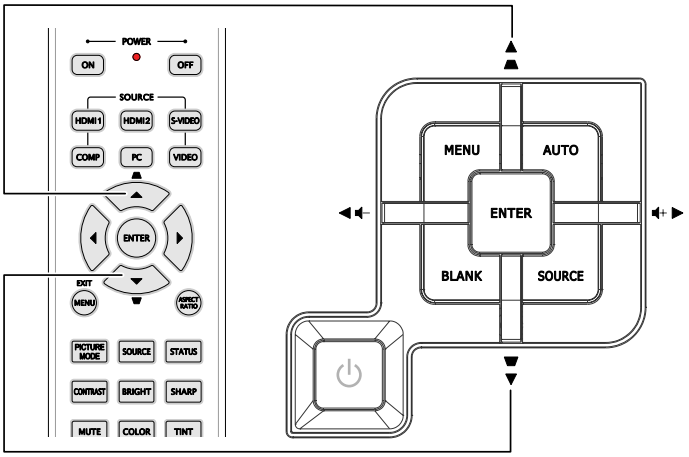

Remote control and OSD panel

4. The keystone control appears on the display.

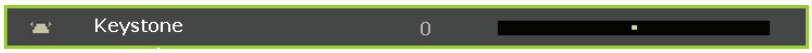

Adjusting the Volume

1. Press the **Volume** +/- buttons on the remote control.
The volume control appears on the display.

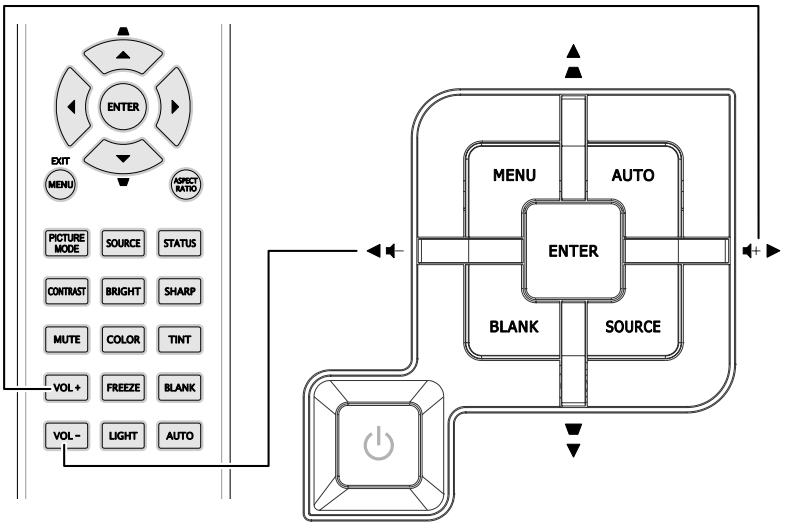

2. Press the **Left** or **Right Cursor** buttons on the keypad to adjust **Volume** +/-.

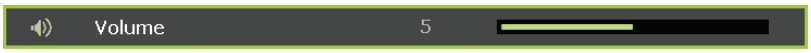

3. Press the **MUTE** button to turn off the volume (This feature is available only on the remote).

ON-SCREEN DISPLAY (OSD) MENU SETTINGS

OSD Menu Controls

The projector has an OSD that lets you make image adjustments and change various settings.

Navigating the OSD

You can use the remote control cursor buttons or the buttons on the top of the projector to navigate and make changes to the OSD. The following illustration shows the corresponding buttons on the projector.

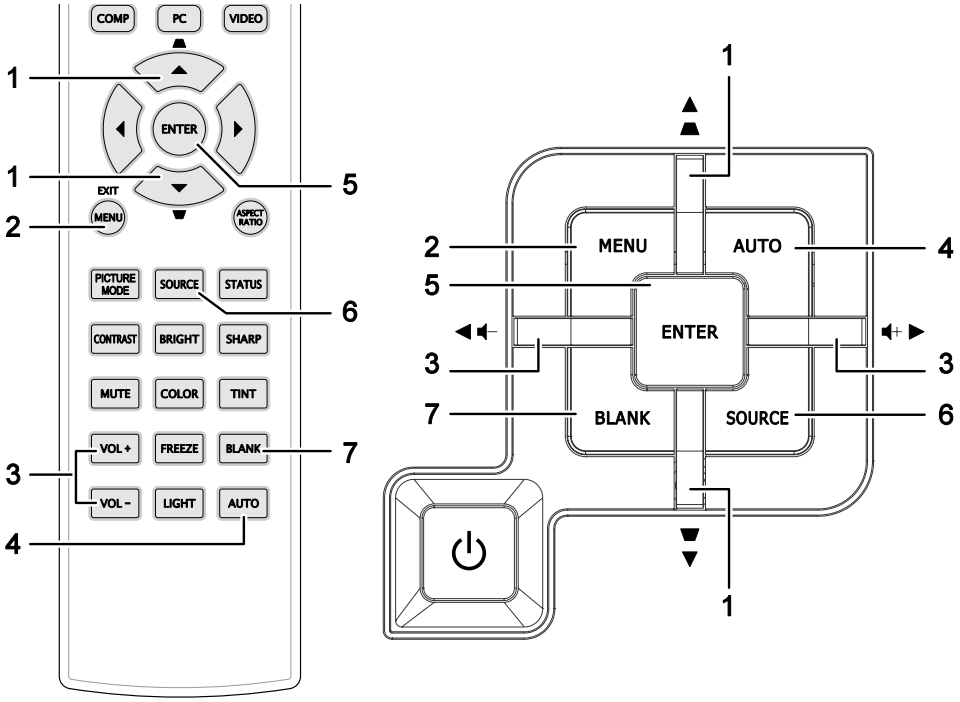

1. To enter the OSD, press the **MENU** button.
2. There are six menus. Press the cursor ◄► button to move through the menus.
3. Press the cursor ▲▼ button to move up and down in a menu.
4. Press ◄► to change values for settings.
5. Press **MENU** to close the OSD or leave a sub menu.

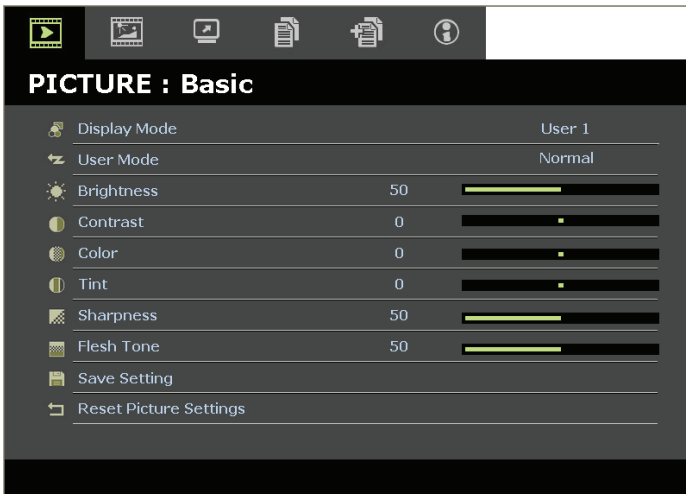

Note:
*Depending on the video source, not all items in the OSD are available. For example, the **PC Detail Adjustment** item in the PICTURE: Basic menu can only be modified when connected to a PC. Items that are not available cannot be accessed and are grayed out.*

Setting the OSD Language

Set the OSD language to your preference before continuing.

1. Press the **MENU** button. Press the cursor ◄► button to navigate to **SYSTEM SETUP: Basic**.

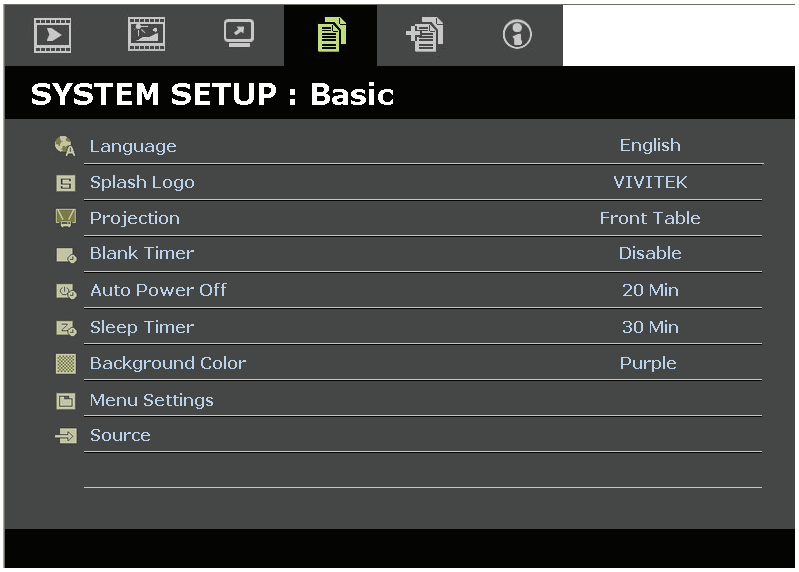

2. Press the cursor ▲▼ button until **Language** is highlighted.
3. Press the cursor ◄► button until the language you want is selected.
4. Press the **MENU** button to close the OSD.

OSD Menu Overview

Use the following illustration to quickly find a setting or determine the range for a setting.

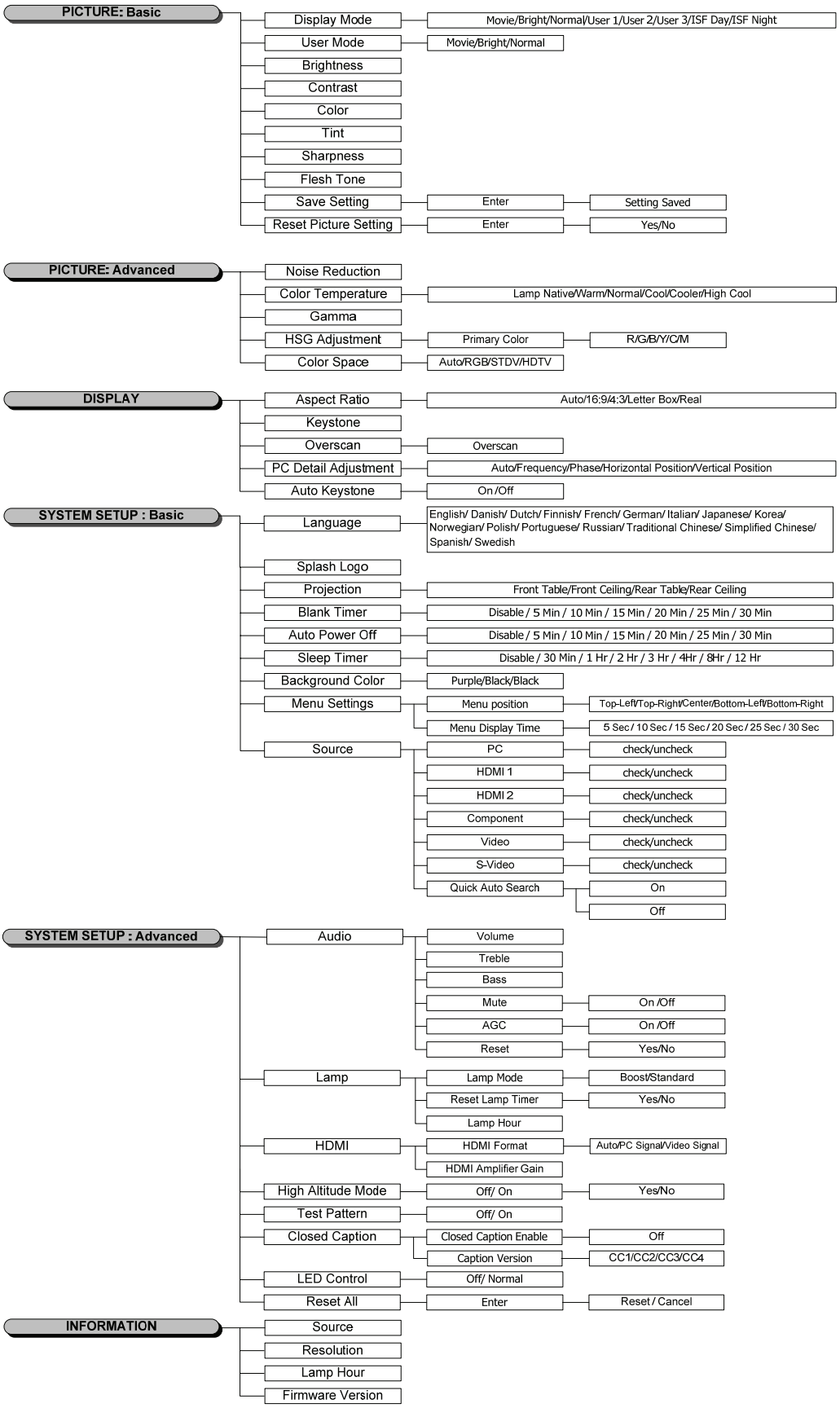

PICTURE: Basic Menu

Press the **MENU** button to open the **OSD** menu. Press the cursor ◄► button to move to the **PICTURE: Basic** menu. Press the cursor ▲▼ button to move up and down in the **PICTURE: Basic** menu. Press ◄► to change values for settings.

> ***Note:***
> *Customizeing the settings in **PICTURE: Basic** menu is only available in User 1/ 2/ 3 mode.*

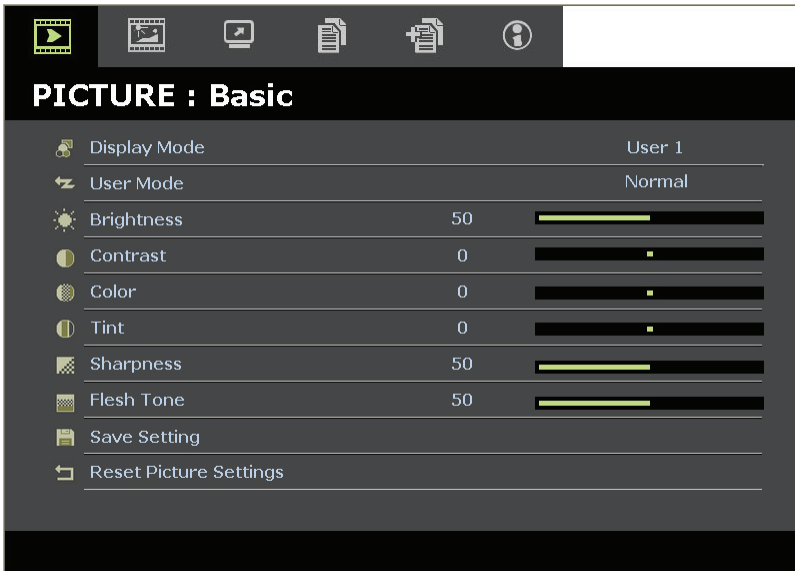

ITEM	DESCRIPTION
Display Mode	Press the cursor ◄► buttons to set the Display Mode. (Range: Movie/ Bright/ Normal/ User 1/ User 2/ User 3) **Notes:** ISF Day/ISF Night is available when ISF Mode is on.
User Mode	Press the cursor ◄► buttons to set the User Mode. (Range: Movie/ Bright/ Normal**)**
Brightness	Press the cursor ◄► buttons to adjust the display brightness.
Contrast	Press the cursor ◄► buttons to adjust the display contrast.
Color	Press the cursor ◄► buttons to adjust the video saturation. **Notes:** This function is only available when Component, Video or S-Video input source is selected.
Tint	Press the cursor ◄► buttons to adjust the video tint/hue. **Notes:** This function is only available when Component, Video or S-Video with NTSC system input source is selected.
Sharpness	Press the cursor ◄► buttons to adjust the display sharpness. **Notes:** This function is only available when Component, Video or S-Video input source is selected.
Flesh Tone	Press the cursor ◄► buttons to adjust the display flesh tone. **Notes:** This function is only available when Component, Video or S-Video input source is selected.
Save Setting	Press the **ENTER** button to save all settings.
Reset Picture Settings	Press the **ENTER** button to reset all settings to default values.

PICTURE: Advanced Menu

Press the **MENU** button to open the **OSD** menu. Press the cursor ◄► button to move to the **PICTURE: Advanced** menu. Press the cursor ▲▼ button to move up and down in the **PICTURE: Advanced** menu. Press ◄► to change values for settings.

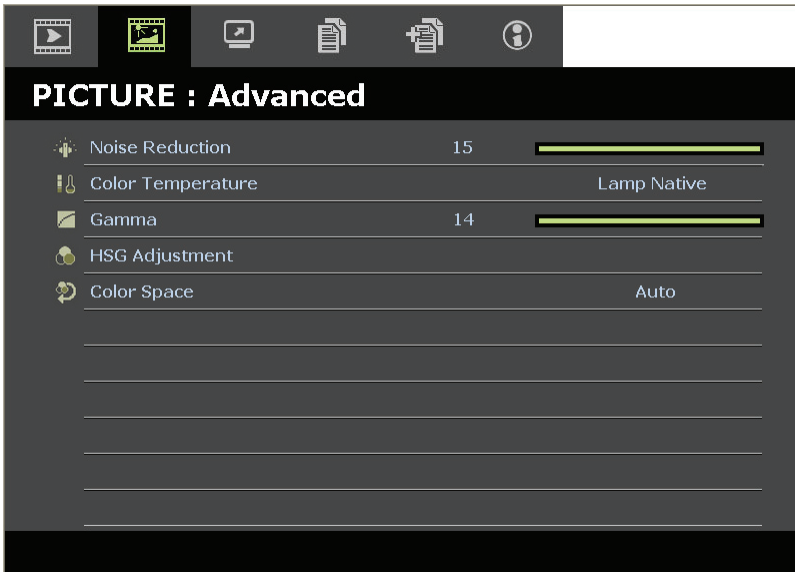

ITEM	DESCRIPTION
Noise Reduction	Press the cursor ◄► button to adjust the Noise Reduction.
Color Temperature	Press the cursor ◄► button to set the Color Temperature.
Gamma	Press the cursor ◄► button to adjust the gamma correction of the display. **Notes:** This function is only available in User 1/ 2/ 3 mode.
HSG Adjustment	Press the **ENTER** button to enter the **HSG Adjustment** sub menu. See *HSG Adjustment* on page 21.
Color Space	Press the cursor ◄► button to set the Color Space. (Range: **Auto**/ RGB/ SDTV/ HDTV) **Notes:** This function is only available when HDMI input source is selected.

HSG Adjustment

Press the **ENTER** button to enter the **HSG Adjustment** sub menu.

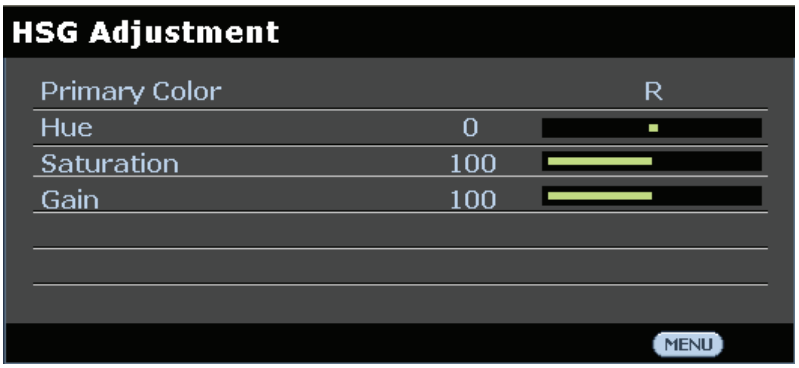

ITEM	DESCRIPTION
Primary Color	Press the ◄► buttons to set the Primary Color. **Notes:** There are six sets (**R**/ G/ B/ C/ M/ Y) of colors to be customized.
Hue	Press the ◄► buttons to adjust the Hue.
Saturation	Press the ◄► buttons to adjust the Saturation.
Gain	Press the ◄► buttons to adjust the Gain.

DISPLAY Menu

Press the **MENU** button to open the **OSD** menu. Press the cursor ◄► button to move to the **DISPLAY** menu. Press the cursor ▲▼ button to move up and down in the **DISPLAY** menu. Press ◄► to change values for settings.

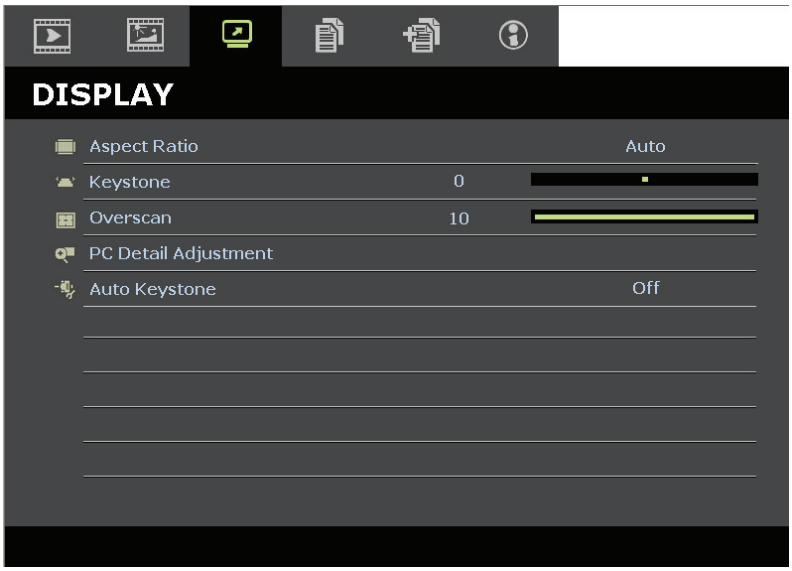

ITEM	DESCRIPTION
Aspect Ratio	Press the cursor ◄► button to set the Aspect Ratio. (Range: **Auto**/ 16:9/ 4:3/ Letter Box/ Real)
Keystone	Press the cursor ◄► button to adjust the Keystone. **Notes:** This function is available when the **Auto keystone** function is turned off.
Overscan	Press the cursor ◄► button to adjust the Overscan.
PC Detail Adjustment	Press the **ENTER** button to enter the **PC Detail Adjustment** sub menu. See *PC Detail Adjustment* on page 23.
Auto Keystone	Press the cursor ◄► button to turn on or off the Auto Keystone. **Notes:** When Auto Keystone is on, the projector will automatically adjust the Keystone.

PC Detail Adjustment

Press the **ENTER** button to enter the **PC Detail Adjustment** sub menu.

> ***Note:***
> *Customizing the settings in **PC Detail Adjustment** menu is only available when PC input source (analog RGB) is selected.*

ITEM	DESCRIPTION
Auto	Press the **ENTER/AUTO** button on the control panel or the **ENTER/AUTO** button on the remote control to automatically adjust frequency, phase, and position.
Frequency	Press the ◄► buttons to adjust the A/D sampling number.
Phase	Press the ◄► buttons to adjust the A/D sampling clock.
Horizontal Position	Press the ◄► buttons to adjust the display position right or left.
Vertical Position	Press the ◄► buttons to adjust the display position up or down.

SYSTEM SETUP: Basic Menu

Press the **MENU** button to open the **OSD** menu. Press the cursor ◄► button to move to the **SYSTEM SETUP: Basic** menu. Press the cursor ▲▼ button to move up and down in the **SYSTEM SETUP: Basic** menu. Press ◄► to change values for settings.

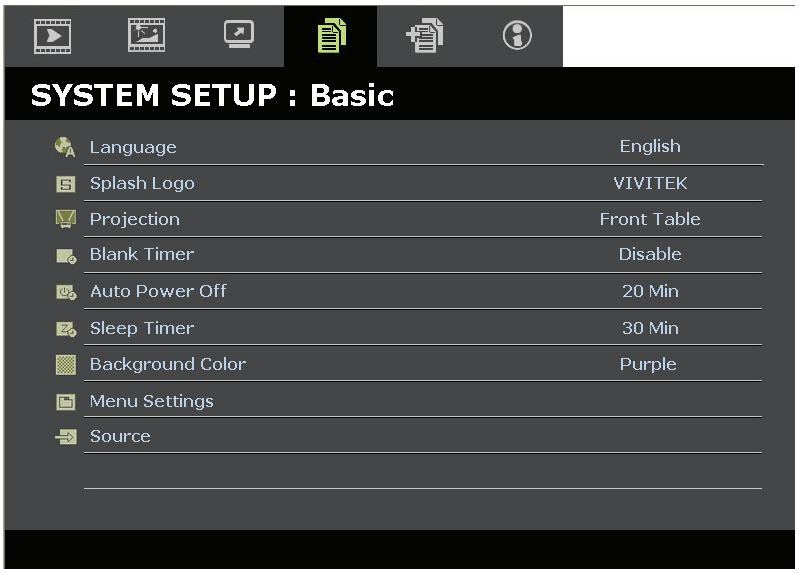

ITEM	DESCRIPTION
Language	Press the cursor ◄► buttons to select a different localization menu. (Range: English/ Danish/ Dutch/ Finnish/ French/ German/ Italian/ Japanese/ Korea/ Norwegian/ Polish/ Portuguese/ Russian/ Traditional Chinese/ Simplified Chinese/ Spanish/ Swedish)
Splash Logo	Press the cursor ◄► buttons to select a different startup screen. (Range: **Vivitek**/ Blue/ Black)
Projection	Press the cursor ◄► buttons to choose from four projection methods: **Front Table**/ Front Ceiling/ Rear Table/ Rear Ceiling.
Blank Timer	Press the cursor ◄► buttons to set the Blank Screen timer. The projected image is automatically restored after the set time. (Range: **Disable**/ 5 min/ 10 min/ 15 min/ 20 min/ 25 min/ 30 min)
Auto Power Off	Press the cursor ◄► buttons to set the Auto Power Off timer. The projector automatically turns off if no input source is detected after the preset period of time. (Range: **Disable**/ 5 min/ 10 min/ 15 min/ 20 min/ 25 min/ 30 min)
Sleep Timer	Press the cursor ◄► buttons to set Sleep timer. The projector automatically turns off after the preset period of time. (Range: **Disable**/ 30 min/ 1hr/ 2hr/ 3hr/ 4hr/ 8hr/ 12hr)
Background Color	Press the cursor ◄► buttons to select the background color when no input source is detected. (Range: Purple/ Black/ Blue)
Menu Settings	Press the **ENTER** button to enter the **Menu Settings** sub menu. See *Menu Settings* on page 25.
Source	Press the **ENTER** button to enter the **Source** sub menu. See *Source* on page 25.

Menu Settings

Press the **ENTER** button to enter the **Menu Settings** sub menu.

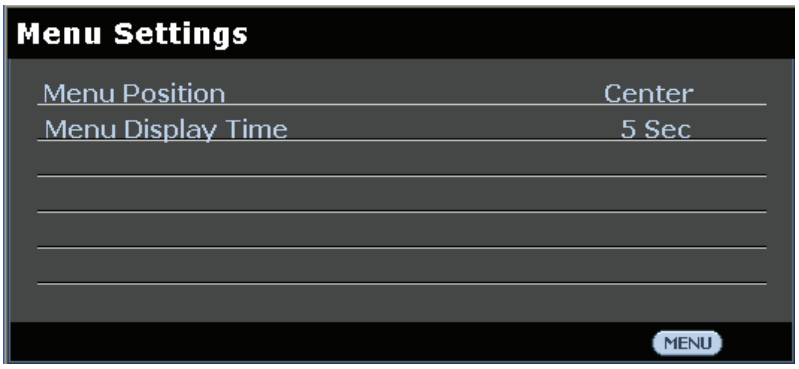

ITEM	DESCRIPTION
Menu Position	Press the ◄► buttons to select from five OSD locations: Top-Left/ Top-Right/ **Center**/ Bottom-Left/ Bottom-Right.
Menu Display Time	Press the ◄► buttons to set the Menu Display timer before the OSD times out. (Range: 5sec/ 10sec/ **15sec**/ 20sec/ 25sec/ 30sec)

Source

Press the **ENTER** button to enter the **Source** sub menu.

ITEM	DESCRIPTION
PC	Press the ◄► buttons to enable or disable the PC source.
HDMI 1	Press the ◄► buttons to enable or disable the HDMI source.
HDMI 2	
Component	Press the ◄► buttons to enable or disable the Component source.
Video	Press the ◄► buttons to enable or disable the Video source.
S-Video	Press the ◄► buttons to enable or disable the S-Video source.
Quick Auto Search	Press the ◄► buttons to enable or disable Quick Auto Search for available input source. **Notes:** When the desired source is selected, the Quick Auto Search function will be turn off.

SYSTEM SETUP: Advanced Menu

Press the **MENU** button to open the **OSD** menu. Press the cursor ◄► button to move to the **SYSTEM SETUP: Advanced** menu. Press the cursor ▲▼ button to move up and down in the **SYSTEM SETUP: Advanced** menu.

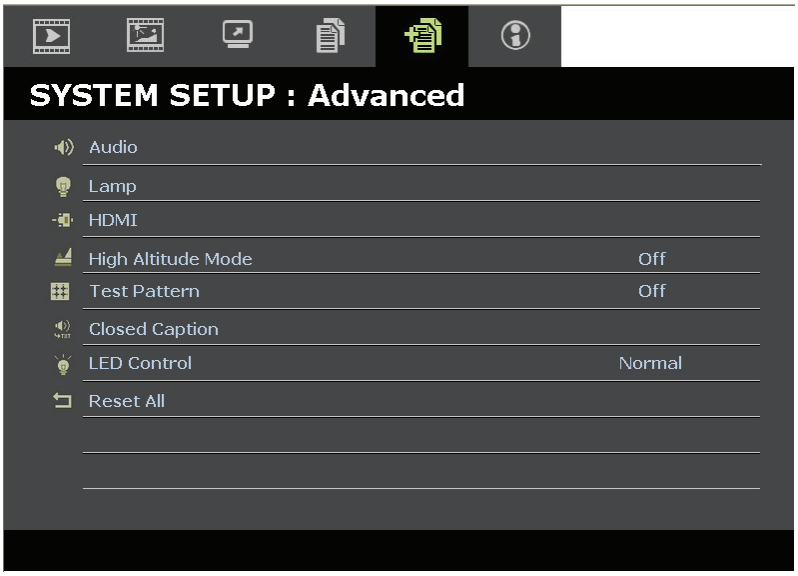

ITEM	DESCRIPTION
Audio	Press the **ENTER** button to enter the **Audio** sub menu. See *Audio* on page 27.
Lamp	Press the **ENTER** button to enter the **Lamp** sub menu. See *Lamp* on page 27.
HDMI	Press the **ENTER** button to enter the **HDMI** sub menu. See *HDMI* on page 28.
High Altitude Mode	Press the cursor ◄► buttons to turn on or off High Altitude Mode when the altitude of the environment is higher than 1500m, or the temperature is over 40°C.
Test Pattern	Press the cursor ◄► buttons to turn on or off the grid test pattern.
Closed Caption	Press the **ENTER** button to enter the **Closed Caption** sub menu. See *Closed Caption* on page 28.
LED Control	Press the cursor ◄► buttons to select the LED control. Select **Normal** for normal LED display and Off to disable LED display.
Reset All	Press the **ENTER** button to enter reset all settings to default values.

Audio

Press the **ENTER** button to enter the **Audio** sub menu.

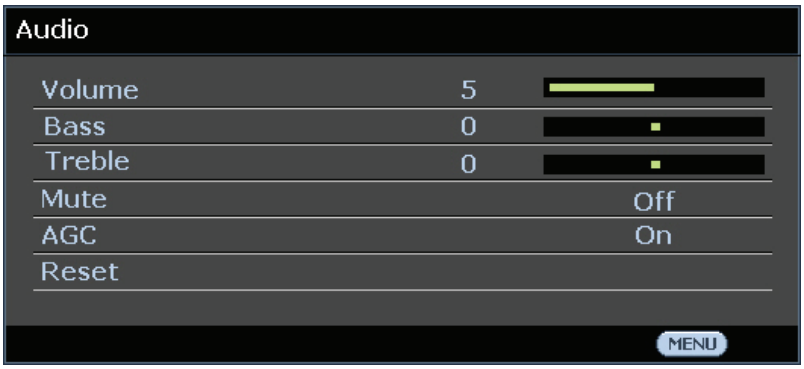

ITEM	DESCRIPTION
Volume	Press the ◄► buttons to adjust the audio Volume.
Bass	Press the ◄► buttons to adjust the audio Bass.
Treble	Press the ◄► buttons to adjust the audio Treble.
Mute	Press the ◄► buttons to turn on or off the speaker.
AGC	Press the ◄► buttons to turn on or off the AGC setting.
Reset	Press the **ENTER** button to reset all settings to default values.

Lamp

Press the **ENTER** button to enter the **Lamp** sub menu.

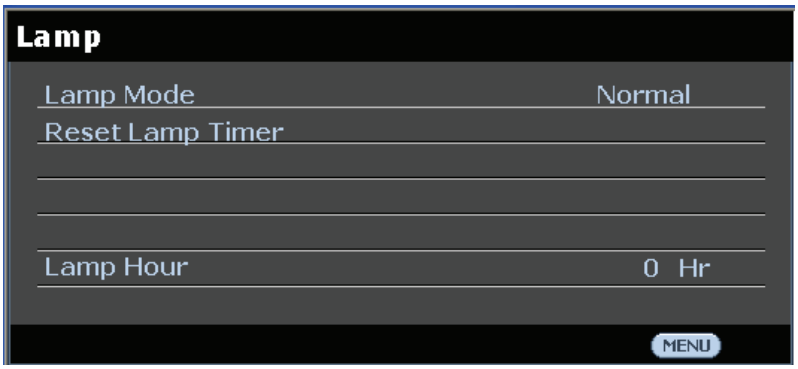

ITEM	DESCRIPTION
Lamp Mode	Press the ◄► buttons to adjust lamp brightness.
Reset Lamp Timer	Press the **ENTER** button to reset the Lamp Hour after the lamp is replaced.
Lamp Hour	Displays the number of hours the lamp has been in use.

HDMI

Press the **ENTER** button to enter the **HDMI** sub menu.

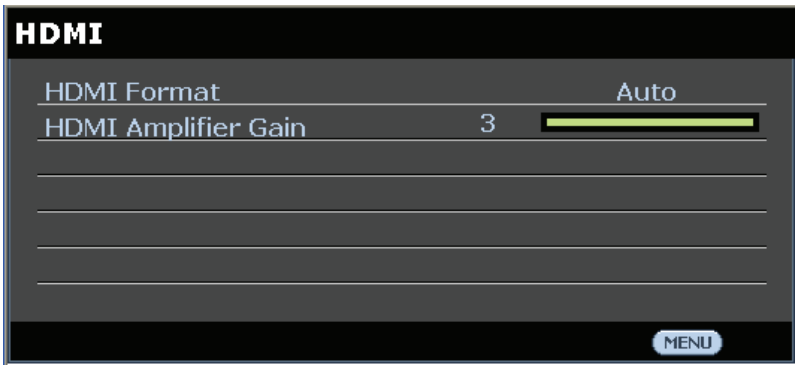

ITEM	DESCRIPTION
HDMI Format	Press the ◄► buttons to select from three HDMI display formats: Auto/ PC signal/ Video signal.
HDMI Amplifier Gain	Press the ◄► buttons to adjust HDMI Amplifier Gain.

Closed Caption

Press the **ENTER** button to enter the **Closed Caption** sub menu.

ITEM	DESCRIPTION
Closed Caption Enable	Press the ◄► buttons to turn on or off Closed Caption.
Caption Version	Press the ◄► buttons to select the Caption Version.

INFORMATION Menu

Press the **MENU** button to open the **OSD** menu. Press the cursor ◄► button to move to the **INFORMATION Menu**.

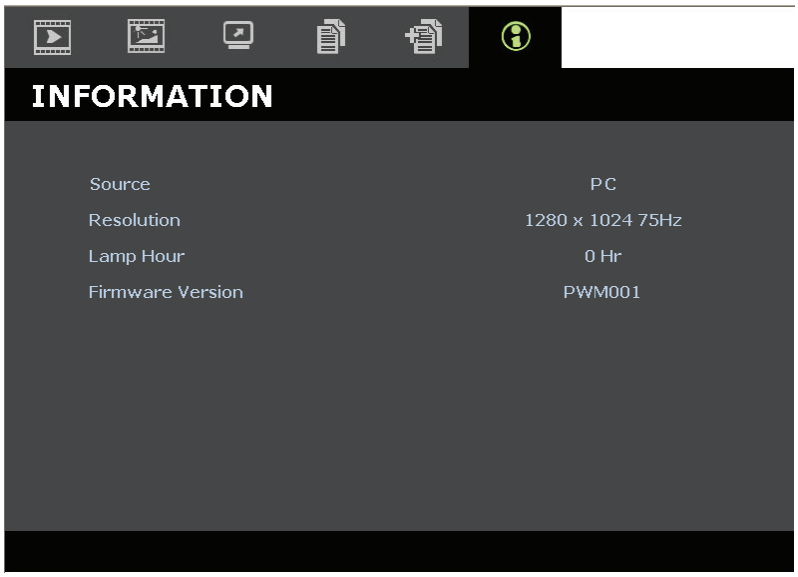

ITEM	DESCRIPTION
Source	Displays the activated input source.
Resolution	Displays the native resolution of input source.
Lamp Hour	Displays the number of hours the lamp has been in use.
Firmware Version	Displays the firmware version of the projector.

Note:
Information displayed in this menu is for viewing only and cannot be edited.

Replacing the Projection Lamp

The projection lamp should be replaced when it burns out. It should only be replaced with a certified replacement part, which you can order from your local dealer.

Important:
a. *The projection lamp used in this product contains a small amount of mercury.*

b. *Do not dispose this product with general household waste.*

c. *Disposal of this product must be carried out in accordance with the regulations of your local authority.*

Warning:
Be sure to turn off and unplug the projector at least 30 minutes before replacing the lamp. Failure to do so could result in a severe burn.

1. Remove the single screw on the lamp compartment cover.

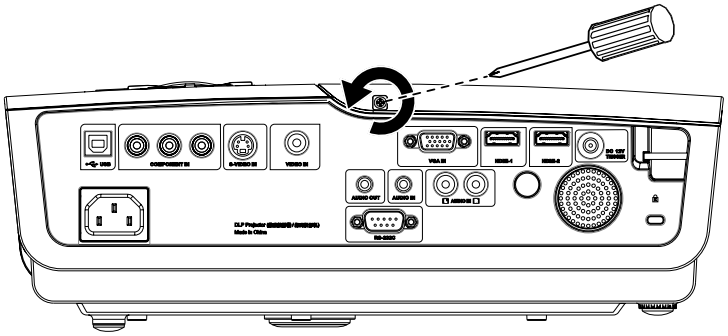

2. Remove the lamp compartment cover.

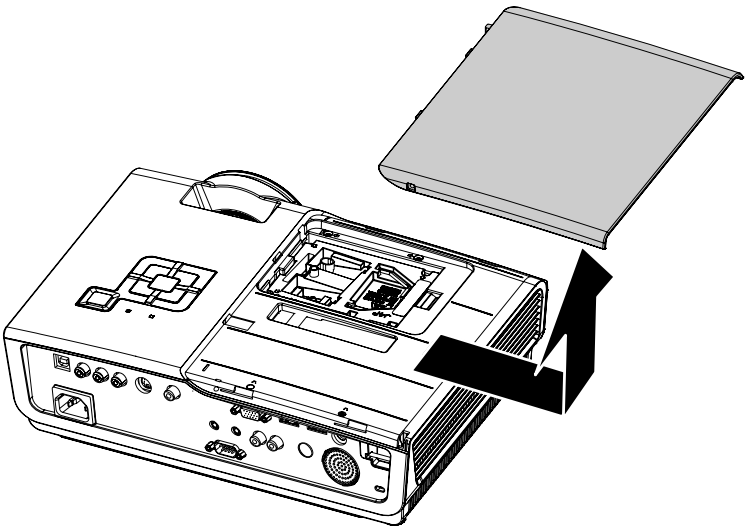

3. Remove the three screws from the lamp module.

4. Lift the module handle up.

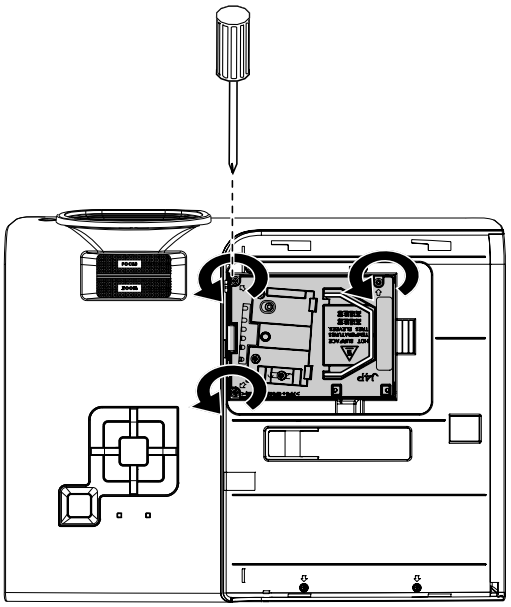

5. Pull firmly on the module handle to remove the lamp module.

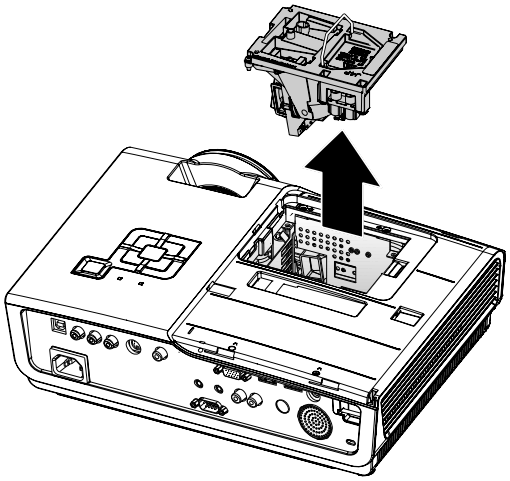

6. Reverse steps 1 to 5 to install the new lamp module. While installing, align the lamp module with the connector and ensure it is level to avoid damage.

Note: The lamp module must sit securely in place and the lamp connector must be connected properly before tightening the screws.

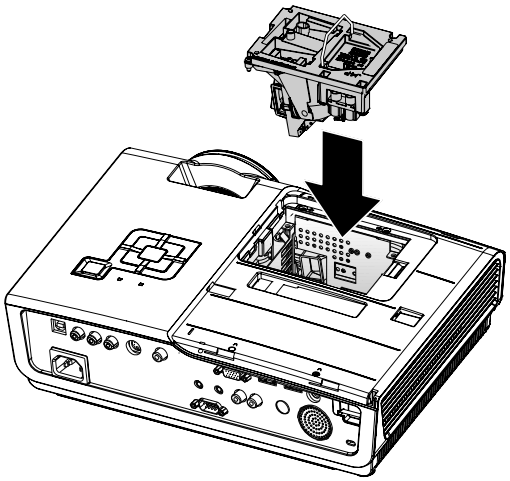

Cleaning the Projector

Cleaning the projector to remove dust and grime will help ensure trouble-free operation.

Warning:
1. *Be sure to turn off and unplug the projector at least 30 minutes before cleaning. Failure to do so could result in a severe burn.*

2. *Use only a dampened cloth when cleaning. Do not allow water to enter the ventilation openings on the projector.*

3. *If a little water gets into the projector interior while cleaning, leave unplugged in a well-ventilated room for several hours before using.*

4. *If a lot of water gets into the projector interior when cleaning, have the projector serviced.*

Cleaning the Lens

You can purchase optic lens cleaner from most camera stores. Refer to the following to clean the projector lens.

1. Apply a little optic lens cleaner to a clean soft cloth. (Do not apply the cleaner directly to the lens.)
2. Lightly wipe the lens in a circular motion.

Caution:
1. *Do not use abrasive cleaners or solvents.*

2. *To prevent discoloration or fading, avoid getting cleaner on the projector case.*

Cleaning the Case

Refer to the following to clean the projector case.

1. Wipe off dust with a clean dampened cloth.
2. Moisten the cloth with warm water and mild detergent (such as used to wash dishes), and then wipe the case.
3. Rinse all detergent from the cloth and wipe the projector again.

Caution:
To prevent discoloration or fading of the case, do not use abrasive alcohol-based cleaners.

Using the Kensington® Lock

If you are concerned about security, attach the projector to a permanent object with the Kensington slot and a security cable.

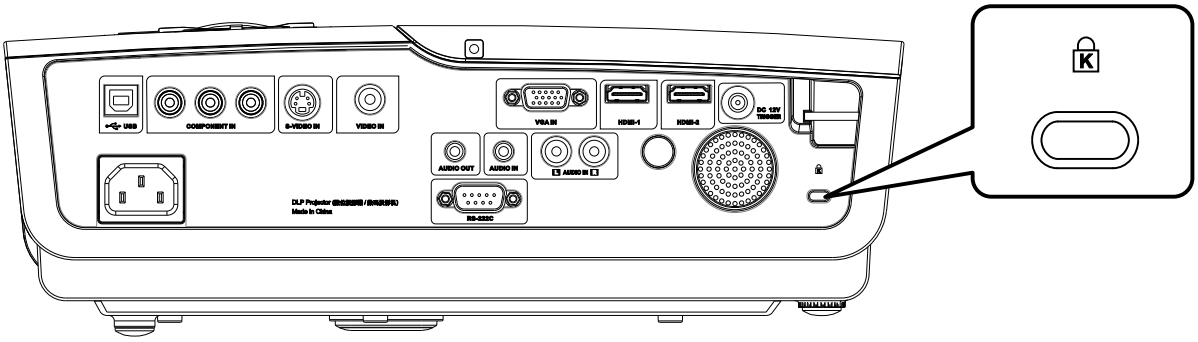

Note:
Contact your vendor for details on purchasing a suitable Kensington security cable.

The security lock corresponds to Kensington's MicroSaver Security System. If you have any comment, contact: Kensington, 2853 Campus Drive, San Mateo, CA 94403, U.S.A. Tel: 800-535-4242, *http://www.Kensington.com*.

TROUBLESHOOTING

Common problems and solutions

These guidelines provide tips to deal with problems you may encounter while using the projector. If the problem remains unsolved, contact your dealer for assistance.

Often after time spent troubleshooting, the problem is traced to something as simple as a loose connection. Check the following before proceeding to the problem-specific solutions.

- *Use some other electrical device to confirm that the electrical outlet is working.*
- *Ensure the projector is turned on.*
- *Ensure all connections are securely attached.*
- *Ensure the attached device is turned on.*
- *Ensure a connected PC is not in suspending mode.*
- *Ensure a connected notebook computer is configured for an external display.*
  (This is usually done by pressing a Fn-key combination on the notebook).

Tips for Troubleshooting

In each problem-specific section, try the steps in the order suggested. This may help you to solve the problem more quickly.

Try to pin point the problem and thus avoid replacing non-defective parts.
For example, if you replace batteries and the problem remains, put the original batteries back and go to the next step.

Keep a record of the steps you take when troubleshooting: The information may be useful when calling for technical support or for passing on to service personnel.

LED Error Messages

Error Code Messages	Power LED Blink	Ready LED Blink	Temp LED Blink
Lamp Ready	ON	ON	OFF
Start	ON	OFF	OFF
Cooling	ON	FLASHING	OFF
Over temperature	OFF	OFF	ON
Thermal Break Sensor error	4	4	OFF
Lamp End of lamp life detected	5	3	OFF
Burner Fan error	6	1	OFF
Lamp Fan error	6	2	OFF
Power Fan error	6	3	OFF
DMD Fan error	6	4	OFF
Case Open	7	OFF	OFF
DMD error	8	OFF	OFF
Color wheel error	9	OFF	OFF

In the event of an error, please disconnect the AC power cord and wait for one (1) minute before re-starting the projector. If the POWER or LAMP LEDs are still blinking or the TEMP LED is lit, contact your service center.

Image Problems

Problem: No image appears on the screen

1. Verify the settings on your notebook or desktop PC.
2. Turn off all equipment and power up again in the correct order.

Problem: The image is blurred

1. Adjust the **Focus** on the projector.
2. Press the **Auto** button on the remote control or projector.
3. Ensure the projector-to-screen distance is within the 10-meter (33-feet) specified range.
4. Check that the projector lens is clean.

Problem: The image is wider at the top or bottom (trapezoid effect)

1. Position the projector so it is as perpendicular to the screen as possible.
2. Use the **Keystone** button on the remote control or projector to correct the problem.

Problem: The image is reversed

Check the **Projection** setting on the **Installation I** menu of the OSD.

Problem: The image is streaked

1. Set the **Frequency** and **Tracking** settings on the **Computer** menu of the OSD to the default settings.
2. To ensure the problem is not caused by a connected PC's video card, connect to another computer.

Problem: The image is flat with no contrast

Adjust the **Contrast** setting on the **Image** menu of the OSD.

Problem: The color of the projected image does not match the source image.

Adjust the **Color Temperature** and **Gamma** settings on the **Image** menu of the OSD.

Lamp Problems

Problem: There is no light from the projector

1. Check that the power cable is securely connected.
2. Ensure the power source is good by testing with another electrical device.
3. Restart the projector in the correct order and check that the Power LED is green.
4. If you have replaced the lamp recently, try resetting the lamp connections.
5. Replace the lamp module.
6. Put the old lamp back in the projector and have the projector serviced.

Problem: The lamp goes off

1. Power surges can cause the lamp to turn off. Re-plug power cord. When the READY LED is on, press the power button.
2. Replace the lamp module.
3. Put the old lamp back in the projector and have the projector serviced.

Remote Control Problems

Problem: The projector does not respond to the remote control

1. Direct the remote control towards remote sensor on the projector.
2. Ensure the path between remote and sensor is not obstructed.
3. Turn off any fluorescent lights in the room.
4. Check the battery polarity.
5. Replace the batteries.
6. Turn off other Infrared-enabled devices in the vicinity.
7. Have the remote control serviced.

Audio Problems

Problem: There is no sound

1. Adjust the volume on the remote control.
2. Adjust the volume of the audio source.
3. Check the audio cable connection.
4. Test the source audio output with other speakers.
5. Have the projector serviced.

Problem: The sound is distorted

1. Check the audio cable connection.
2. Test the source audio output with other speakers.
3. Have the projector serviced.

Having the Projector Serviced

If you are unable to solve the problem, you should have the projector serviced. Pack the projector in the original carton. Include a description of the problem and a checklist of the steps you took when trying to fix the problem: The information may be useful to service personnel. For servicing, return the projector to the place you purchased it.

SPECIFICATIONS

Specifications

Model	**HDP2100 Series**
Display type	TI DLP DMD 0.65”
Native Resolution	1920 x 1080
Weight	3.4 kg (7.5 lbs)
Projection distance	1 meters ~ 10 meters
Projection screen size	25" ~ 300"
Projection lens	Manual Focus/Manual Zoom
Zoom ratio	1.2
Vertical keystone correction	+/- 15 degrees
Auto Keystone	Yes
Projection methods	Front, Rear, Desktop/Ceiling (Rear, Front)
Data compatibility	VGA, SVGA, XGA, SXGA, Mac
SDTV/ EDTV/ HDTV	480i, 576i, 576p, 480p, 720p, 1080i, 1080p
Video compatibility	NTSC 4.43, PAL (M/N/60), SECAM
H-Sync	15.6 – 91.1 kHz
V-Sync	50 – 85 Hz
Safety certification	FCC-B, UL, cUL, CB, CE, CCC, KC, PCT, and C-tick
Operation temperature	5° ~ 35°C
Dimensions	332.8 mm (W) x 113 mm (H) x 254.6 mm (D)
AC Input	AC Universal 100 ~ 240, Typical @ 110VAC (100~240)/ ± 10%
Power consumption	Standard mode: 250W (Typical)/ 270W (Maximum) Boost mode: 300W (Typical)/ 320W (Maximum)
Stand By	<1 watt
Lamp	230W
Audio speaker	AMP 5W speaker
Input Terminals	Digital: HDMI x 2
	Analog: RGB HD-15 x 1
	Composite: RCA x 1 (Yellow)
	S-Video: mini dim x 1
	Component: RCA x 3
	Audio in: ϕ3.5 mm stereo mini jack x 1; RCA x 2 R/L
Output Terminals	Mini-jack stereo x 1
Control Terminals	RS-232: DSUB-9 x 1
	DC_out (screen trigger): DC Jack x 1 (DC12V 200mA output function)
	Keyboard Emulation Control: USB connector type B
Security	Kensington lock

Projection Distance vs. Projection Size

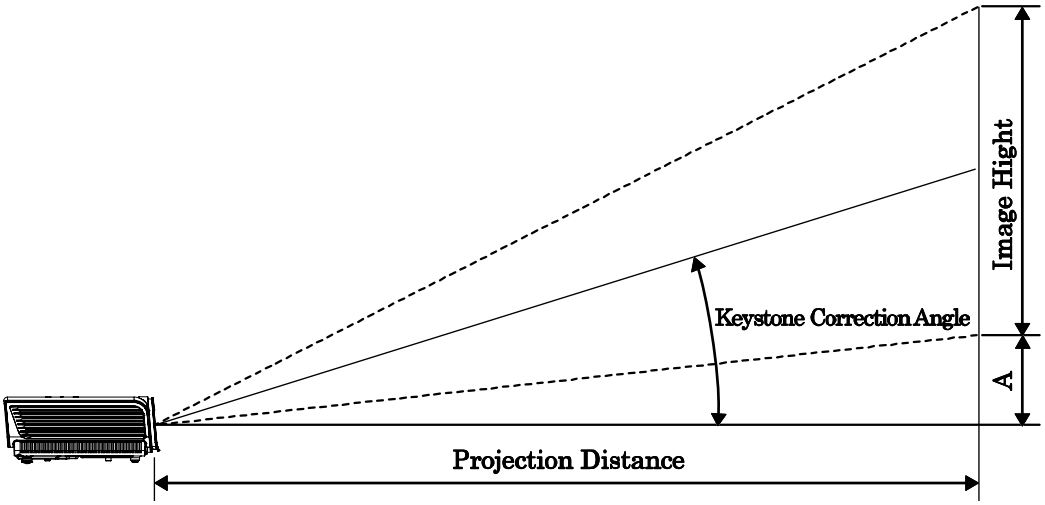

HDP2100 Series Projection Distance and Size Table

16:9 SCREEN				PROJECTION DISTANCE			VERTICAL OFFSET IN CM
DIAGONAL		WIDTH	HEIGHT	MIN LENGTH (WITH MAX ZOOM)	AVERAGE	MAX LENGTH (WITH MIN ZOOM)	
INCH	CM	CM	CM				
30	76	66	37	106	116	127	11
40	102	89	50	141	155	169	15
50	127	111	62	176	194	211	19
60	152	133	75	211	232	253	22
80	203	177	100	282	310	338	30
100	254	221	125	352	387	422	37
120	305	266	149	422	465	507	45
150	381	332	187	528	581	634	56
200	508	443	249	704	774	845	75
220	559	487	274	774	852	929	82
250	635	553	311	880	968	1056	93
300	762	664	374	1056	1162	1267	112

HDP2100 Series Timing Mode Table

The projector can display several resolutions. The following table outlines the resolutions that can be displayed by the projector.

SIGNAL	RESOLUTION	H-SYNC (KHZ)	V-SYNC (HZ)	COMPOSITE / S-VIDEO	COMPONENT	RGB (ANALOG)	HDMI (DIGITAL)
NTSC	—	15.734	60.0	O	—	–	–
PAL/SECAM	—	15.625	50.0	O	—	–	–
VESA	720 x 400	37.9	85.0	—	—	O	O
	640 x 480	31.5	60.0	—	—	O	O
	640 x 480	37.9	72.8	—	—	O	O
	640 x 480	37.5	75.0	—	—	O	O
	640 x 480	43.3	85.0	—	—	O	O
	800 x 600	35.2	56.3	—	—	O	O
	800 x 600	37.9	60.3	—	—	O	O
	800 x 600	46.9	75.0	—	—	O	O
	800 x 600	48.1	72.2	—	—	O	O
	800 x 600	53.7	85.1	—	—	O	O
	1024 x 768	48.4	60.0	—	—	O	O
	1024 x 768	56.5	70.1	—	—	O	O
	1024 x 768	60.0	75.0	—	—	O	O
	1024 x 768	68.7	85.0	—	—	O	O
	1280 x 800	49.7	59.8	—	—	O	O
	1280 x 800	62.8	74.9	—	—	O	O
	1280 x 800	71.6	84.8	—	—	O	O
	1280 x 1024	64.0	60.0	—	—	O	O
	1280 x 1024	80.0	75.0	—	—	O	O
	1280 x 1024	91.1	85.0	—	—	O	O
	1400 x 1050	65.3	60.0	—	—	O	O
	1440 x 900	55.9	60.0	—	—	O	O
	1600 x1200	75.0	60	—	—	O	O
Apple Macintosh	640 x 480	35.0	66.7	—	—	O	O
	832 x 624	49.7	74.5	—	—	O	O
	1024 x 768	60.2	74.9	—	—	O	O
	1152 x 870	68.7	75.1	—	—	O	O
SDTV	480i	15.734	60.0	—	O	—	O
	576i	15.625	50.0	—	O	—	O
EDTV	576p	31.3	50.0	—	O	—	O
	480p	31.5	60.0	—	O	—	O

SIGNAL	RESOLUTION	H-SYNC (KHZ)	V-SYNC (HZ)	COMPOSITE / S-VIDEO	COMPONENT	RGB (ANALOG)	HDMI (DIGITAL)
HDTV	720p	37.5	50.0	—	O	—	O
	720p	45.0	60.0	—	O	—	O
	1080i	33.8	60.0	—	O	—	O
	1080i	28.1	50.0	—	O	—	O
	1080p	67.5	60.0	—	O	—	O
	1080p	56.3	50.0	—	O	—	O

O: Frequency supported

—: Frequency not supported

The native resolution of the panel for the HDP2100 series is 1920 x 1080.
Resolution other than native resolution may display with uneven size of text or lines.

Projector Dimensions

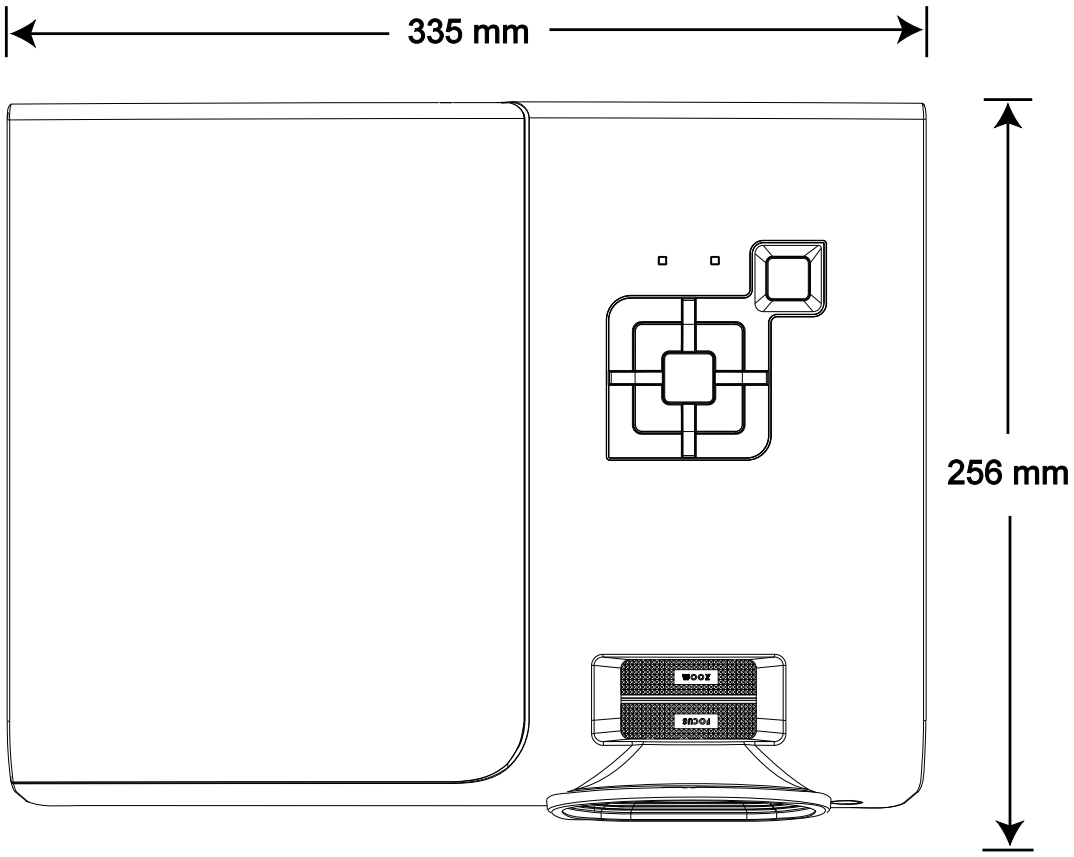

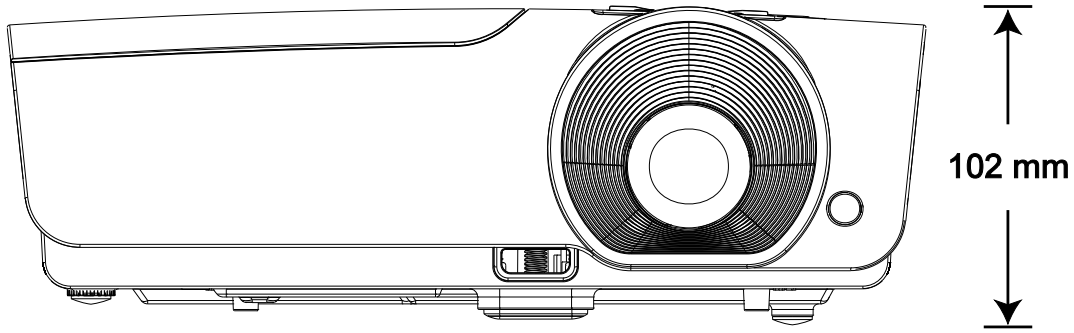

FCC Warning

This equipment has been tested and found to comply with the limits for a Class B digital device pursuant to Part 15 of the FCC Rules. These limits are designed to provide reasonable protection against harmful interference when the equipment is operated in a commercial environment.

This equipment generates, uses, and can radiate radio frequency energy and, if not installed and used in accordance with the instruction manual, may cause harmful interference to radio communications. Operation of this equipment in a residential area is likely to cause harmful interference in which case the user will be required to correct the interference at his/her own expense.

Changes or modifications not expressly approved by the parties responsible for compliance could void the user's authority to operate the equipment.

Canada

This class B digital apparatus complies with Canadian ICES-003.

Safety Certifications

FCC-B, UL, cUL, CB, CE, CCC, KC, PCT, and C-tick

EN 55022 Warning

This is a Class B product. In a domestic environment, it may cause radio interference, in which case the user may be required to take adequate measures. The typical use is in a conference room, meeting room, or auditorium.