myprojectorlamps.com

The most trusted, dependable name in projector lamp sales.

http://www.myprojectorlamps.com

http://www.myprojectorlamps.ca

http://www.myprojectorlamps.eu

The following projector manual has not been modified or altered in any way.

DLA-VS2000_Cover.fm Page 1 Wednesday, August 6, 2008 12:38 PM

ENGLISH

JVC

INSTRUCTIONS

D-ILA PROJECTOR

DLA-VS2000

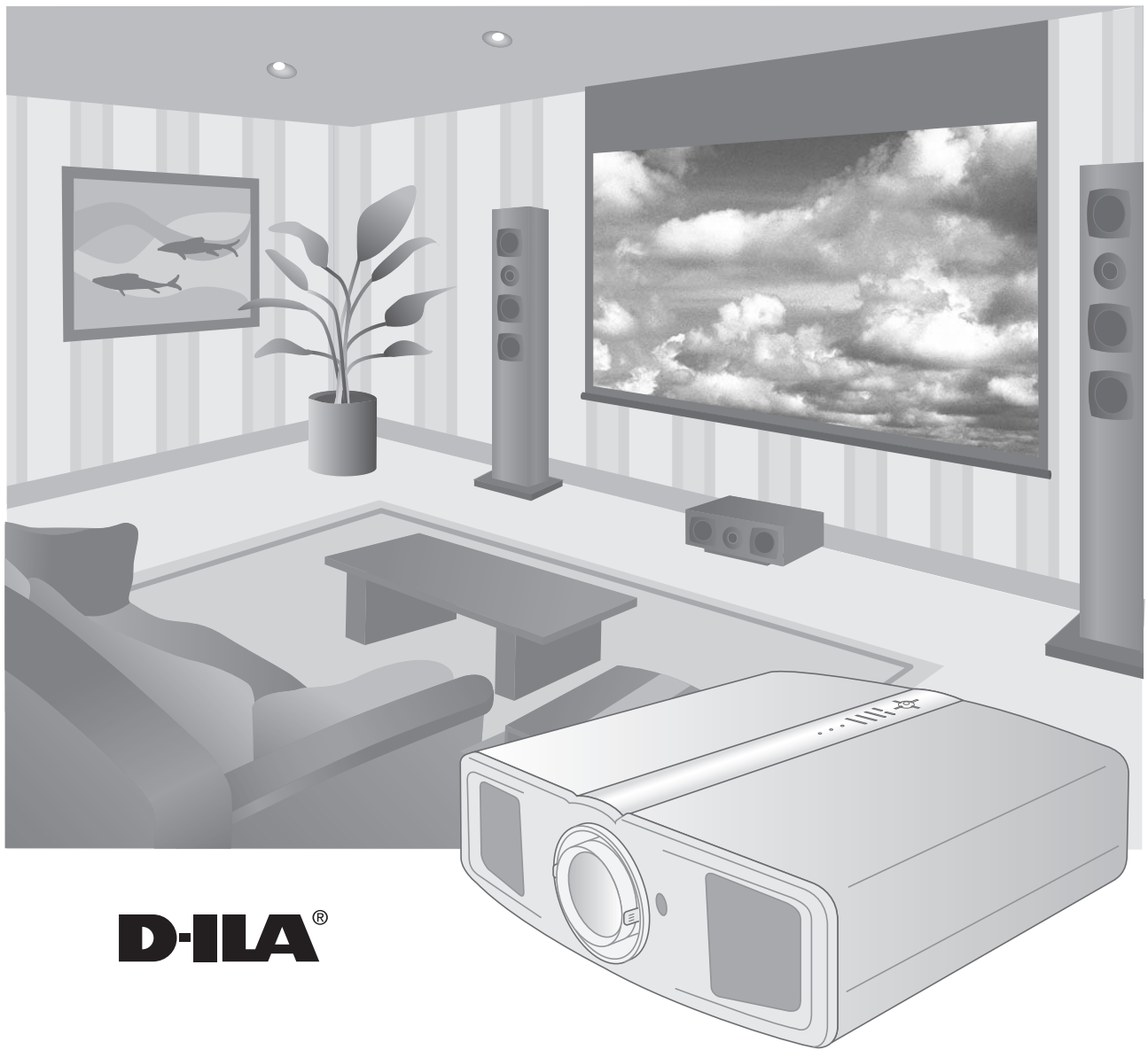

D-ILA®

For Customer use :

Enter below the serial No. which is located on the bottom side of the cabinet. Retain this information for future reference.

Model No. DLA-VS2000

Serial No.

LCT2488-001A

Safety Precautions

IMPORTANT INFORMATION

This product has a High Intensity Discharge (HID) lamp that contains mercury.

Disposal of these materials may be regulated in your community due to environmental considerations. For disposal or recycling information, please contact your local authorities or for USA, the Electronic Industries Alliance: http://www.eiae.org.

WARNING:

TO PREVENT FIRE OR SHOCK HAZARDS, DO NOT EXPOSE THIS APPLIANCE TO RAIN OR MOISTURE.

WARNING:

THIS APPARATUS MUST BE EARTHED.

CAUTION:

To reduce the risk of electric shock, do not remove cover. Refer servicing to qualified service personnel.

This projector is equipped with a 3-blade grounding type plug to satisfy FCC rule. If you are unable to insert the plug into the outlet, contact your electrician.

FCC INFORMATION (U.S.A. only)

CAUTION:

Changes or modification not approved by JVC could void the user's authority to operate the equipment.

NOTE:

This equipment has been tested and found to comply with the limits for Class B digital device, pursuant to Part 15 of the FCC Rules. These limits are designed to provide reasonable protection against harmful interference in a residential installation. This equipment generates, uses, and can radiate radio frequency energy and, if not installed and used in accordance with the instructions, may cause harmful interference to radio communications. However, there is no guarantee that interference will not occur in a particular installation. If this equipment does cause harmful interference to radio or television reception, which can be determined by turning the equipment off and on, the user is encourage to try to correct the interference by one or more of the following measures:

c Reorient or relocate the receiving antenna.

c Increase the separation between the equipment and receiver.

c Connect the equipment into an outlet on a circuit different from that to which the receiver is connected.

c Consult the dealer or an experienced radio/TV technician for help.

MACHINE NOISE INFORMATION (Germany only)

Changes Machine Noise Information Ordinance 3. GSGV, January 18, 1991: The sound pressure level at the operator position is equal or less than 25 dB (A) according to ISO 7779.

About the installation place

Do not install the projector in a place that cannot support its weight securely.

If the installation place is not sturdy enough, the projector could fall or overturn, possibly causing personal injury.

IMPORTANT SAFEGUARDS

Electrical energy can perform many useful functions. This unit has been engineered and manufactured to assure your personal safety. But IMPROPER USE CAN RESULT IN POTENTIAL ELECTRICAL SHOCK OR FIRE HAZARD. In order not to defeat the safeguards incorporated into this product, observe the following basic rules for its installation, use and service. Please read these Important Safeguards carefully before use.

- All the safety and operating instructions should be read before the product is operated.
- The safety and operating instructions should be retained for future reference.
- All warnings on the product and in the operating instructions should be adhered to.
- All operating instructions should be followed.
- Place the projector near a wall outlet where the plug can be easily unplugged.
- Unplug this product from the wall outlet before cleaning. Do not use liquid cleaners or aerosol cleaners. Use a damp cloth for cleaning.
- Do not use attachments not recommended by the product manufacturer as they may be hazardous.
- Do not use this product near water. Do not use immediately after moving from a low temperature to high temperature, as this causes condensation, which may result in fire, electric shock, or other hazards.
- Do not place this product on an unstable cart, stand, or table. The product may fall, causing serious injury to a child or adult, and serious damage to the product. The product should be mounted according to the manufacturer's instructions, and should use a mount recommended by the manufacturer.
- When the product is used on a cart, care should be taken to avoid quick stops, excessive force, and uneven surfaces which may cause the product and cart to overturn, damaging equipment or causing possible injury to the operator.

PORTABLE CART WARNING
(symbol provided by RETAC)

S3126A

- Slots and openings in the cabinet are provided for ventilation. These ensure reliable operation of the product and protect it from overheating. These openings must not be blocked or covered. (The openings should never be blocked by placing the product on bed, sofa, rug, or similar surface. It should not be placed in a built-in installation such as a bookcase or rack unless proper ventilation is provided and the manufacturer's instructions have been adhered to.)To allow better heat dissipation, keep a clearance between this unit and its surrounding as shown below. When this unit is enclosed in a space of dimensions as shown below, use an air-conditioner so that the internal and external temperatures are the same.

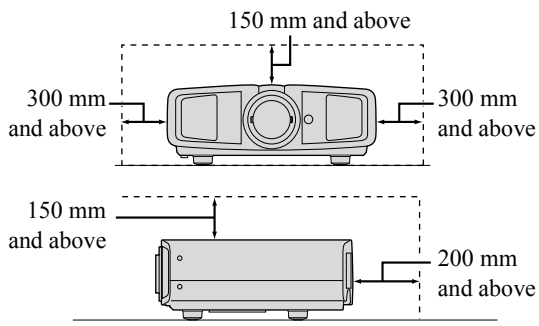

- This product should be operated only with the type of power source indicated on the label. If you are not sure of the type of power supply to your home, consult your product dealer or local power company.
- This product is equipped with a three-wire plug. This plug will fit only into a grounded power outlet. If you are unable to insert the plug into the outlet, contact your electrician to install the proper outlet. Do not defeat the safety purpose of the grounded plug.
- Power-supply cords should be routed so that they are not likely to be walked on or pinched by items placed upon or against them. Pay particular attention to cords at doors, plugs, receptacles, and the point where they exit from the product.
- For added protection of this product during a lightning storm, or when it is left unattended and unused for long periods of time, unplug it from the wall outlet and disconnect the cable system. This will prevent damage to the product due to lightning and power line surges.
- Do not overload wall outlets, extension cords, or convenience receptacles on other equipment as this can result in a risk of fire or electric shock.
- Never push objects of any kind into this product through openings as they may touch dangerous voltage points or short out parts that could result in a fire or electric shock. Never spill liquid of any kind on the product.
- Do not attempt to service this product yourself as opening or removing covers may expose you to dangerous voltages and other hazards. Refer all service to qualified service personnel.
- Unplug this product from the wall outlet and refer service to qualified service personnel under the following conditions:
  a) When the power supply cord or plug is damaged.
  b) If liquid has been spilled, or objects have fallen on the product.
  c) If the product has been exposed to rain or water.
  d) If the product does not operate normally by following the operating instructions. Adjust only those controls that are covered by the Operation Manual, as an improper adjustment of controls may result in damage and will often require extensive work by a qualified technician to restore the product to normal operation.
  e) If the product has been dropped or damaged in any way.
  f) When the product exhibits a distinct change in performance - this indicates a need for service.
- When replacement parts are required, be sure the service technician has used replacement parts specified by the manufacturer or with same characteristics as the original part. Unauthorized substitutions may result in fire, electric shock, or other hazards.
- Upon completion of any service or repairs to this product, ask the service technician to perform safety checks to determine that the product is in proper operating condition.
- The product should be placed more than one foot away from heat sources such as radiators, heat registers, stoves, and other products (including amplifiers) that produce heat.
- When connecting other products such as VCR's, and DVD players, you should turn off the power of this product for protection against electric shock.
- Do not place combustibles behind the cooling fan. For example, cloth, paper, matches, aerosol cans or gas lighters that present special hazards when over heated.
- Do not look into the projection lens while the illumination lamp is turned on. Exposure of your eyes to the strong light can result in impaired eyesight.
- Do not look into the inside of this unit through vents (ventilation holes), etc. Do not look at the illumination lamp directly by opening the cabinet while the illumination lamp is turned on. The illumination lamp also contains ultraviolet rays and the light is so powerful that your eyesight can be impaired.
- Do not drop, hit, or damage the light-source lamp (lamp unit) in any way. It may cause the light-source lamp to break and lead to injuries. Do not use a damaged light source lamp. If the light-source lamp is broken, ask your dealer to repair it. Fragments from a broken light-source lamp may cause injuries.
- The light-source lamp used in this projector is a high pressure mercury lamp. Be careful when disposing of the lightsource lamp. If anything is unclear, please consult your dealer.
- Do not ceiling-mount the projector to a place which tends to vibrate; otherwise, the attaching fixture of the projector could be broken by the vibration, possibly causing it to fall or overturn, which could lead to personal injury.
- Use only the accessory cord designed for this product to prevent shock.

***DO NOT allow any unqualified person to install the unit.**

Be sure to ask your dealer to install the unit (e.g. attaching it to the ceiling) since special technical knowledge and skills are required for installation. If installation is performed by an unqualified person, it may cause personal injury or electrical shock.

Safety Precautions (Continued)

POWER CONNECTION

For USA and Canada only
Use only the following power cord.

Power cord

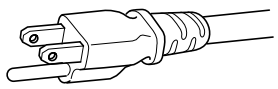

The power supply voltage rating of this product is AC110 V – AC240 V. Use only the power cord designated by our dealer to ensure Safety and EMC.

Ensure that the power cable used for the projector is the correct type for the AC outlet in your country. Consult your product dealer.

Power cord

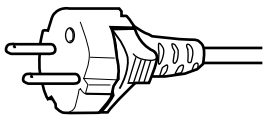

For European Countries

WARNING:
Do not cut off the main plug from this equipment.
If the plug fitted is not suitable for the power points in your home or the cable is too short to reach a power point, then obtain an appropriate safety approved extension lead or adapter or consult your dealer.
If nonetheless the mains plug is cut off, dispose of the plug immediately, to avoid a possible shock hazard by inadvertent connection to the main supply. If a new main plug has to be fitted, then follow the instruction given below.

WARNING:
THIS APPARATUS MUST BE EARTHED.

IMPORTANT:
The wires in the mains lead on this product are coloured in accordance with the following cord:

Green-and-yellow	: Earth
Blue	: Neutral
Brown	: Live

As these colours may not correspond with the coloured making identifying the terminals in your plug, proceed as follows:
The wire which is coloured green-and-yellow must be connected to the terminal which is marked M with the letter E or the safety earth or coloured green or green-and-yellow.
The wire which is coloured blue must be connected to the terminal which is marked with the letter N or coloured black.
The wire which is coloured brown must be connected to the terminal which is marked with the letter L or coloured red.

If this symbol is shown, it is only valid in the European Union.

DLA-VS2000_Safety.fm Page 5 Sunday, August 24, 2008 7:38 PM

ENGLISH

Information for Users on Disposal of Old Equipment

Attention:
This symbol is only valid in the European Union.

[European Union]

This symbol indicates that the electrical and electronic equipment should not be disposed as general household waste at its end-of-life. Instead, the product should be handed over to the applicable collection point for the recycling of electrical and electronic equipment for proper treatment, recovery and recycling in accordance with your national legislation.
By disposing of this product correctly, you will help to conserve natural resources and will help prevent potential negative effects on the environment and human health which could otherwise be caused by inappropriate waste handling of this product. For more information about collection point and recycling of this product, please contact your local municipal office, your household waste disposal service or the shop where you purchased the product.
Penalties may be applicable for incorrect disposal of this waste, in accordance with national legislation.

(Business users)

If you wish to dispose of this product, please visit our web page www.jvc-europe.com to obtain information about the take-back of the product.

[Other Countries outside the European Union]

If you wish to dispose of this product, please do so in accordance with applicable national legislation or other rules in your country for the treatment of old electrical and electronic equipment.

FRANÇAIS

Informations relatives à l'élimination des appareils usagés, à l'intention des utilisateurs

Attention:
Ce symbole n'est reconnu que dans l'Union européenne.

[Union européenne]

Lorsque ce symbole figure sur un appareil électrique et électronique, cela signifie qu'il ne doit pas être éliminé en tant que déchet ménager à la fin de son cycle de vie. Le produit doit être porté au point de pré-collecte approprié au recyclage des appareils électriques et électroniques pour y subir un traitement, une récupération et un recyclage, conformément à la législation nationale.
En éliminant correctement ce produit, vous contribuerez à la conservation des ressources naturelles et à la prévention des éventuels effets négatifs sur l'environnement et la santé humaine, pouvant être dus à la manipulation inappropriée des déchets de ce produit. Pour plus d'informations sur le point de pré-collecte et le recyclage de ce produit, contactez votre mairie, le service d'évacuation des ordures ménagères ou le magasin dans lequel vous avez acheté le produit.
Des amendes peuvent être infligées en cas d'élimination incorrecte de ce produit, conformément à la législation nationale.

(Utilisateurs professionnels)

Si vous souhaitez éliminer ce produit, visitez notre page Web www.jvc-europe.com afin d'obtenir des informations sur sa récupération.

[Pays ne faisant pas partie de l'Union européenne]

Si vous souhaitez éliminer ce produit, faites-le conformément à la législation nationale ou autres règles en vigueur dans votre pays pour le traitement des appareils électriques et électroniques usagés.

DEUTSCH

Benutzerinformationen zur Entsorgung alter Geräte

Hinweis:
Dieses Symbol ist nur in der Europäischen Uniongültig.

[Europäische Union]

Dieses Symbol zeigt an, dass das elektrische bzw. elektronische Gerät nicht als normaler Haushaltsabfall entsorgt werden soll. Stattdessen sollte das Produkt zur fachgerechten Entsorgung, Weiterverwendung und Wiederverwertung in Übereinstimmung mit der Landesgesetzgebung einer entsprechenden Sammelstelle für das Recycling elektrischer und elektronischer Geräte zugeführt werden.
Die korrekte Entsorgung dieses Produkts dient dem Umweltschutz und verhindert mögliche Schäden für die Umwelt und die menschliche Gesundheit, welche durch unsachgemäße Behandlung des Produkts auftreten können. Weitere Informationen zu Sammelstellen und dem Recycling dieses Produkts erhalten Sie bei Ihrer Gemeindeverwaltung, Ihrem örtlichen Entsorgungsunternehmen oder in dem Geschäft, in dem Sie das Produkt gekauft haben.
Für die nicht fachgerechte Entsorgung dieses Abfalls können gemäß der Landesgesetzgebung Strafen ausgesprochen werden.

(Geschäftskunden)

Wenn Sie dieses Produkt entsorgen möchten, besuchen Sie bitte unsere Webseite www.jvc-europe.com, um Informationen zur Rücknahme des Produkts zu erhalten.

[Andere Länder außerhalb der Europäischen Union]

Wenn Sie dieses Produkt entsorgen möchten, halten Sie sich dabei bitte an die entsprechenden Landesgesetze und andere Regelungen in Ihrem Land zur Behandlung elektrischer und elektronischer Geräte.

NEDERLANDS

Informatie voor gebruikers over het weggooien van oude apparatuur

Let op:
Dit symbool is alleen geldig in de Europese Unie.

[Europese Unie]

Deze markering geeft aan dat de elektrische en elektronische apparatuur bij het einde van de gebruiksduur niet bij het huishoudelijk afval mag worden gegooid. Het product moet in plaats daarvan worden ingeleverd bij het relevante inzamelingspunt voor hergebruik van elektrische en elektronische apparatuur, voor juiste verwerking, terugwinning en hergebruik in overeenstemming met uw nationale wetgeving.
Door dit product naar het inzamelingspunt te brengen, werkt u mee aan het behoud van natuurlijke hulpbronnen en met het voorkomen van potentiële negatieve effecten op het milieu en de volksgezondheid, die anders veroorzaakt zouden kunnen worden door onjuiste afvalverwerking van dit product. Neem voor meer informatie over inzamelingspunten en hergebruik van dit product contact op met de gemeente in uw woonplaats, het afvalverwerkingsbedrijf of de winkel waar u het product hebt aangeschaft.
Er kunnen boetes gelden voor een onjuiste verwijdering van dit afval, in overeenstemming met de nationale wetgeving.

(Zakelijke gebruikers)

Bezoek als u dit product wilt weggooien onze website www.jvc-europe.com voor informatie over het terugnemen van het product.

[Landen buiten de Europese Unie]

Wanneer u dit product wilt verwijderen, houdt u dan aan de geldende nationale wetgeving of andere regels in uw land voor de verwerking van oude elektrische en elektronische apparatuur.

ESPAÑOL / CASTELLANO

Información para los usuarios sobre la eliminación de equipos usados

Atención:
Este símbolo sólo es válido en la Unión Europea.

[Unión Europea]

Este símbolo indica que los aparatos eléctricos y electrónicos no deben desecharse junto con la basura doméstica al final de su vida útil. El producto deberá llevarse al punto de recogida correspondiente para el reciclaje y el tratamiento adecuado de equipos eléctricos y electrónicos de conformidad con la legislación nacional.
Si desecha el producto correctamente, estará contribuyendo a conservar los recursos naturales y a prevenir los posibles efectos negativos en el medio ambiente y en la salud de las personas que podría causar el tratamiento inadecuado del producto desechado. Para obtener más información sobre el punto de recogida y el reciclaje de este producto, póngase en contacto con su oficina municipal, su servicio de recogida de basura doméstica o la tienda en la que haya adquirido el producto. De acuerdo con la legislación nacional, podrían aplicarse multas por la eliminación incorrecta de estos desechos.

(Empresas)

Si desea desechar este producto, visite nuestra página Web www.jvc-europe.com para obtener información acerca de la retirada del producto.

[Otros países no pertenecientes a la Unión Europea]

Si desea desechar este producto, hágalo de conformidad con la legislación nacional vigente u otras normativas de su país para el tratamiento de equipos eléctricos y electrónicos usados.

ITALIANO

Informazioni per gli utenti sullo smaltimento delle apparecchiature obsolete

Attenzione:
Questo simbolo è valido solo nell'Unione Europea.

[Unione Europea]

Questo simbolo indica che l'apparecchiatura elettrica ed elettronica a cui è relativo non deve essere smaltita tra i rifiuti domestici generici alla fine della sua vita utile. Il prodotto, invece, va consegnato a un punto di raccolta appropriato per il riciclaggio di apparecchiature elettriche ed elettroniche, per il trattamento, il recupero e il riciclaggio corretti, in conformità alle proprie normative nazionali.
Mediante lo smaltimento corretto di questo prodotto, si contribuirà a preservare le risorse naturali e a prevenire potenziali effetti negativi sull'ambiente e sulla salute umana che potrebbero essere provocati, altrimenti, da uno smaltimento inappropriato del prodotto. Per ulteriori informazioni sul punto di raccolta e il riciclaggio di questo prodotto, contattare la sede comunale locale, il servizio di smaltimento rifiuti domestici o il negozio in cui si è acquistato il prodotto.
L'utente è responsabile del conferimento dell'apparecchio a fina vita alle appropriate strutture di raccolta, pena le sanzioni previste dalla vigente legislazione sui rifiuti.

(Per gli utenti aziendali)

Qualora si desideri smaltire questo prodotto, visitare la nostra pagina web www.jvc-europe.com per ottenere informazioni sul ritiro del prodotto.

[Per altre nazioni al di fuori dell'Unione Europea]

Qualora si desideri smaltire questo prodotto, effettuare lo smaltimento in conformità alla normativa nazionale applicabile o alle altre leggi della propria nazione relative al trattamento delle apparecchiature elettriche ed elettroniche obsolete.

PORTUGUÊS

Informações para os Utilizadores sobre a Eliminação de Equipamento Antigo

Atenção:
Este símbolo apenas é válido na União Europeia.

[União Europeia]

Este símbolo indica que o equipamento eléctrico e electrónico não deve ser eliminado como um resíduo doméstico geral, no fim da respectiva vida útil. Pelo contrário, o produto deve ser entregue num ponto de recolha apropriado, para efectuar a reciclagem de equipamento eléctrico e electrónico e aplicar o tratamento, recuperação e reciclagem adequados, de acordo com a respectiva legislação nacional.
Ao eliminar este produto da forma correcta, ajudará a conservar recursos naturais e ajudará a evitar potenciais efeitos negativos no ambiente e saúde humana, que poderiam ser causados pelo tratamento residual inadequado deste produto. Para mais informações sobre o ponto de recolha e reciclagem deste produto, contacte a respectiva entidade local, o serviço de eliminação de resíduos ou a loja onde adquiriu o produto.
Caso estes resíduos não sejam correctamente eliminados, poderão ser aplicadas penalizações, em conformidade com a respectiva legislação nacional.

(utilizadores profissionais)

Se pretender eliminar este produto, visite a nossa página da web em www.jvc-europe.com para obter informações sobre a devolução do produto.

[Outros países fora da União Europeia]

Se pretender eliminar este produto, faça-o de acordo com a legislação nacional aplicável ou outras regras no seu país para o tratamento de equipamento eléctrico e electrónico velho.

ΕΛΛΗΝΙΚΑ

Πληροφορίες σχετικά με την απόρριψη εξοπλισμού

Προσοχή:
Αυτή η σήμανση ισχύει μόνο για την Ευρωπαϊκή Ένωση.

[Ευρωπαϊκή Ένωση]

Αυτή η σήμανση υποδηλώνει ότι ο ηλεκτρικός και ηλεκτρονικός εξοπλισμός δεν πρέπει να απορριφθεί ως κοινό οικιακό απόρριμμα. Αντ' αυτού, το προϊόν πρέπει να παραδοθεί στο ανάλογο σημείο περισυλλογής για την ανακύκλωση των ηλεκτρικών και ηλεκτρονικών μερών και την κατάλληλη επεξεργασία, σύμφωνα με τη νομοθεσία της χώρας σας.
Η σωστή απόρριψη αυτού το προϊόντος βοηθάει στη διαφύλαξη των φυσικών πόρων και στην αποφυγή αρνητικών επιπτώσεων στο περιβάλλον και στην ανθρώπινη υγεία, κάτι που ενδέχεται να προκληθεί από την ακατάλληλη διαχείριση αυτού του προϊόντος ως απόρριμμα. Για περισσότερες πληροφορίες σχετικά με τα σημεία περισυλλογής και ανακύκλωσης αυτού του προϊόντος, επικοινωνήστε με τα γραφεία της τοπικής αυτοδιοίκησης, την υπηρεσία περισυλλογής απορριμμάτων ή το κατάστημα από το οποίο αγοράσατε το προϊόν.
Ανάλογα με τη νομοθεσία της χώρας σας, ενδέχεται να επιβληθούν κυρώσεις σε περίπτωση λανθασμένης απόρριψης αυτού του προϊόντος.

(Επιχειρήσεις)

Αν επιθυμείτε να απορρίψετε αυτό το προϊόν, επισκεφτείτε το διαδικτυακό μας τόπο www.jvc-europe.com για περισσότερες πληροφορίες σχετικά με την επιστροφή του προϊόντος.

[Άλλες χώρες εκτός Ευρωπαϊκής Ένωσης]

Αν επιθυμείτε να απορρίψετε αυτό το προϊόν, πρέπει να τηρήσετε την ισχύουσα εθνική νομοθεσία ή όποιους άλλους κανονισμούς για τη χώρα σας για την απόρριψη ηλεκτρικού και ηλεκτρονικού εξοπλισμού.

DANSK

Brugerinformation om bortskaffelse af gammelt udstyr

Bemærk:
Dette symbol er kun gyldigt i EU.

[EU]
Elektriske produkter og elektroniske apparater med dette symbol må ikke afhændes på samme måde som almindeligt husholdningsaffald, når det skal smides ud. I stedet skal produktet indleveres på det relevante indsamlingssted for elektriske apparater og elektronisk udstyr, hvor det vil blive håndteret korrekt og efterfølgende genanvendt og recirkuleret i henhold til de love, der gælder i dit land.
Ved at bortskaffe dette produkt korrekt, medvirker du til at bevare naturens ressourcer samt forhindre eventuelle negative påvirkninger af miljøet og folkesundheden, der ellers kunne forårsages ved forkert affaldshåndtering af dette produkt. Mere information om indsamlingssteder og genanvendelse af dette produkt kan du få ved at kontakte din lokale kommune, dit renovationsselskab eller den forretning, hvor du har købt produktet.
Ukorrekt bortskaffelse af dette affald kan være strafbar ifølge lovgivningen i nogle lande.

(Professionelle brugere)
Hvis du ønsker at bortskaffe dette produkt, kan du på vores webside www.jvc-europe.com få information om tilbagetagning af produktet.

[Lande uden for EU]
Hvis du ønsker at bortskaffe dette produkt, bedes du gøre det i overensstemmelse med gældende lovgivning eller andre regler i dit land for behandling af gammelt elektrisk og elektronisk udstyr.

SUOMI

Tietoja käyttäjille vanhojen laitteiden hävittämisestä

Huomio:
Tämä symboli on voimassa vain Euroopan unionissa.

[Euroopan unioni]
Tämä symboli tarkoittaa, että sähkö- ja elektroniikkalaitteita ei tule laittaa talousjätteisiin, kun ne poistetaan käytöstä. Sen sijaan tuotteet tulee toimittaa asianmukaiseen sähkö- ja elektroniikkalaitteiden kierrätyspisteeseen, jossa ne käsitellään uusiokäyttöä ja kierrätystä varten paikallisen lainsäädännön mukaan.
Kun hävität tuotteen asianmukaisella tavalla, autat säästämään luonnonvaroja ja estämään mahdollisia ympäristö- ja terveyshaittoja, joita voisi aiheutua tämän tuotteen vääränlaisesta hävittämisestä. Lisätietoja keräyspisteistä ja tämän tuotteen kierrätyksestä saat paikkakuntasi viranomaisilta, kotitalousjätteiden keräyksestä huolehtivasta yrityksestä tai liikkeestä, josta ostit tuotteen.
Tuotteen vääränlaisesta hävittämisestä voi seurata paikallisen lainsäädännön mukaisia rangaistuksia.

(Yrityskäyttäjät)
Jos haluat hävittää tämän tuotteen, web-sivustoltamme osoitteessa www.jvc-europe.com löydät tietoja käytetyn tuotteen palautuksesta.

[Muut maat Euroopan unionin ulkopuolella]
Jos haluat hävittää tämän tuotteen, tee se kansallisen lainsäädännön tai muiden maassasi voimassa olevien määräysten mukaan, jotka koskevat vanhojen sähkö- ja elektroniikkalaitteiden käsittelyä.

SVENSKA

Information till användare gällande kassering av gammal utrustning

Tänk på:
Att denna symbol endast gäller inom den Europeiska gemenskapen.

[Europeiska gemenskapen]
Denna symbol anger att elektrisk och elektronisk utrustning inte ska kasseras som vanligt hushållsavfall, när de inte ska användas mer. Istället ska produkten lämnas in på lämplig återvinningsstation för elektrisk eller elektronisk utrustning, så att den kan tas om hand och återvinnas i enlighet med ert lands lagstiftning.
Genom att avyttra denna profukt på rätt sätt, bidrar du till att bevara naturen och förhindrar potentiellt negativa effekter på miljön och den mänskiliga hälsan, som annars kan bli resultatet vid felaktig hantering av denna produkt. Kontakta ditt kommunkontor, det företag som hanterar dina hushållssopor eller butiken där du köpt produkten, för mer information om återvinningscentraler.
Det kan hända att du bötfälls i enlighet med ert lands lagstiftning om detta avfall kasseras på fel sätt.

(Företagsanvändare)
Om ni vill kassera denna produkt, besök vår webbsida www.jvc-europe.com för att få information om returnering av produkten.

[Övriga länder utanför den Europeiska gemenskapen]
Om du vill kassera denna produkt, ska detta göras i enlighet med gällande lagstiftning i landet, eller enligt andra bestämmelser i ditt land, för behandling av gammal elektrisk eller elektronisk utrustning.

NORSK

Informasjon til brukerne om kassering av gammelt utstyr

OBS!
Dette symbolet er kun gyldig i den Europeiske Union og i EFTA-landene Norge, Island og Sveits.

[Europeiske Union]
Dette symbolet betyr at det elektriske eller elektroniske utstyret ikke skal kasseres som vanlig husholdningsavfall når det har nådd slutten av sin levetid. I stedet skal produktet leveres til en passende mottaksstasjon for kasserte elektriske og elektroniske produkter, slik at disse kan behandles, gjenvinnes og resirkuleres i samsvar med nasjonal lovgivning.
Hvis du kasserer dette produktet på riktig måte, bidrar til du til å bevare naturlige ressurser og til å motvirke de negative virkningene på miljøet og den menneskelige helse som kan oppstå hvis produktet kasseres på feil måte. Hvis du vil ha mer informasjon om mottaksstasjoner og gjennvinning av dette produktet, kan du ta kontakt med kommunen din, renovasjosselskapet ditt eller den forhandleren du kjøpte produktet av.
Feilaktig kassering av dette utstyret kan kanskje bøtelegges, avhengig av nasjonale lover og regler.

(Bedriftsbrukere)
Hvis du ønsker å kassere dette produktet, kan du gå til hjemmesiden vår på www.jvc-europe.com eller www.elretur.no for å få informasjon om retur av dette produktet.

[Andre land utenfor EU]
Hvis du ønsker å kassere dette produktet, må du gjøre det i samsvar med gjeldende nasjonal lovgivning eller andre regler som gjelder i landet ditt når det gjelder behandling av gammelt elektrisk og elektronisk utstyr.

DLA-RS1X_EN.book Page 5 Thursday, February 21, 2008 6:13 PM

Contents

Getting Started

Safety Precautions....2
Main Features....6
Contents....8
How to Read this Manual/ Accessories/Optional Accessories....9
About this Manual....9
Check the Accessories....9
Optional Accessories....9
Controls and Features....10
How to Use the Remote Control....13
Loading Batteries....13
Effective Range of Remote Control Unit....13

Preparation

Selecting Connecting Devices....14
Connecting....15
Connecting via Video Cable....15
Connecting via S-video Cable....15
Connecting via HDMI Cable Or HDMI-DVI Conversion Cable....16
Connecting via Component Video Cable....16
Connecting via SCART-RCA Cable....17
Connecting via RGB Video Cable....17
Installing the Projector and Screen....18
Screen Size and Projection Distance....19

Basic Operation

Projecting Image....20
Convenient Features during Projection....22
Setting the Screen Size....22
Masking the Surrounding Area of an Image....22

Settings

Setting Menu....24
Procedures for Menu Operation....24
Setting Menu....25
Customizing Projected Images....32
Changing the Default Image Profile Values....32
Registering User-defined Image Profiles....33

Troubleshooting

Troubleshooting....34
What to Do When These Messages Are Displayed....36
About Warning Indicators....37
Actions to Be Taken for Warning Mode....37
Replacing the Lamp....38
Procedure for Lamp Replacement....38
Resetting Lamp Time....40
Cleaning and Replacing the Filter....41

Others

RS-232C Interface....42
RS-232C Specifications....42
Command Format....42
RS-232C Communication Examples....46
Copyright and Caution....47
About Trademarks and Copyright....47
Caution....47
Mounting this Unit....48
Specifications....49
Dimensions....50

How to Read this Manual/ Accessories/Optional Accessories

About this Manual

Buttons to be used are colored in a darker shade.

This manual mainly describes the operating method using the remote control.

- Buttons on the remote control are described as [Button Name].
- Selection items on the menu are described as “Selection Item”.

■ Conventions in this manual

	Describes the limitations of the functions or usage.
	Indicates good-to-know information.
	Describes operational precautions.
📖 P9	Indicates related pages.

Check the Accessories

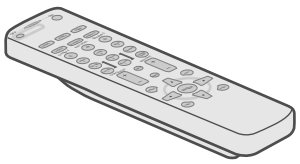

Remote Control

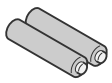

AAA size Batteries
(for operation confirmation)

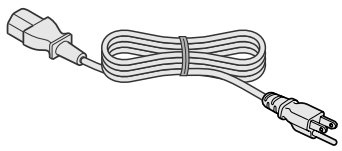

Power Cord
(2.4 m)

- Instruction manual, warranty card and other printed material are also included.

Optional Accessories

Please check with your authorized dealer for details.

- Replacement Lamp: BHL5009-S (Lamp Unit)
- Replacement Filter: LC32058-002A (Inner Filter)

Controls and Features

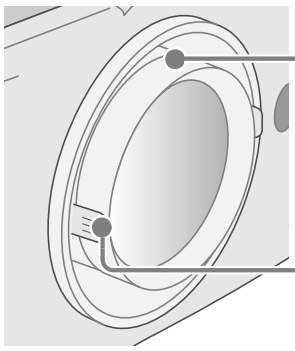

- This unit comes with buffer material that cushions the lens. Remove the buffer material before use.
- Do not throw away the buffer material, retain for future use. (P47)

■ **Front Side/Left Side**

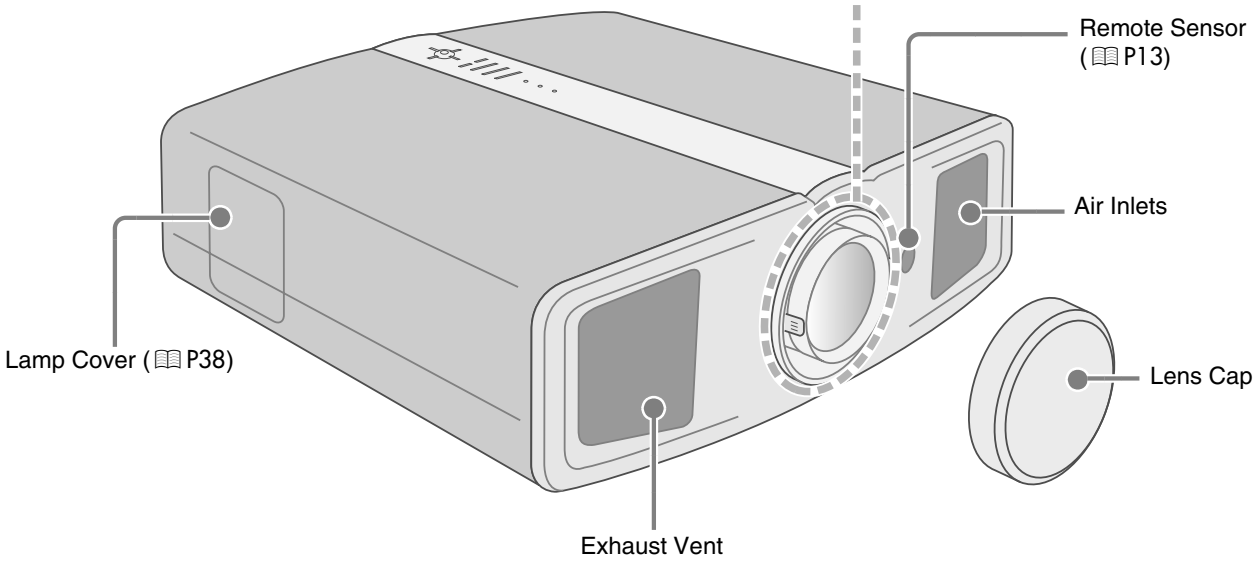

■ **Rear Side/Top Surface**

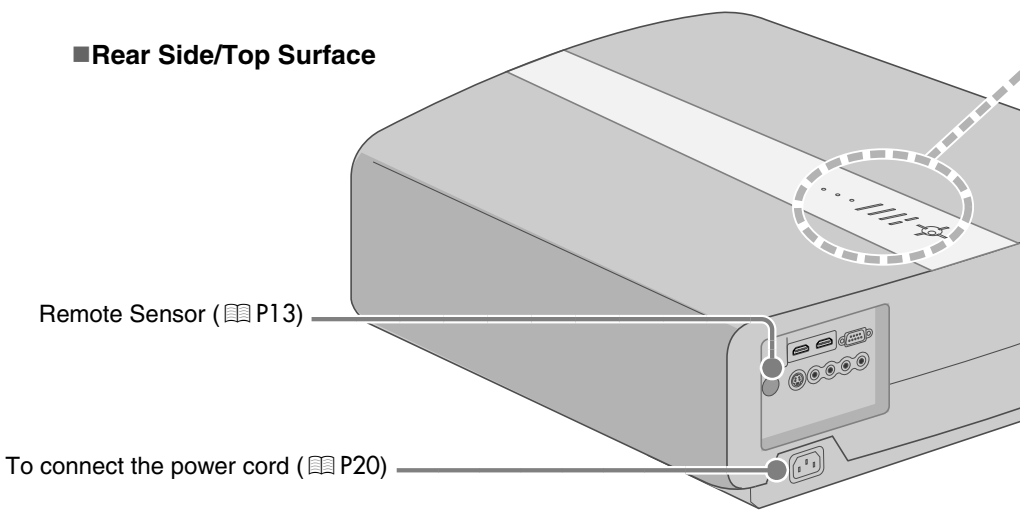

Light on (Red):
Standby mode

Light on (Green):
During projection

Blinking (Green):
Image is temporarily hidden (P21)

Blinking (Red):
Cool Down mode (P21)

Light on (Red):
Warning mode (P37)

Light on/Blinking (Orange):
Lamp warning (P37)

To turn on/off the power

To switch input (P20)

To hide the image temporarily (P21)

To display the menu (P24)

To return to the previous menu

To select or confirm

■**Bottom Surface**

Feet: The height (0 to 5 mm) can be adjusted by turning the foot.

Air Inlets/Filter (P41)

To adjust the position of the image (P19)

Controls and Features (Continued)

■ Remote Control

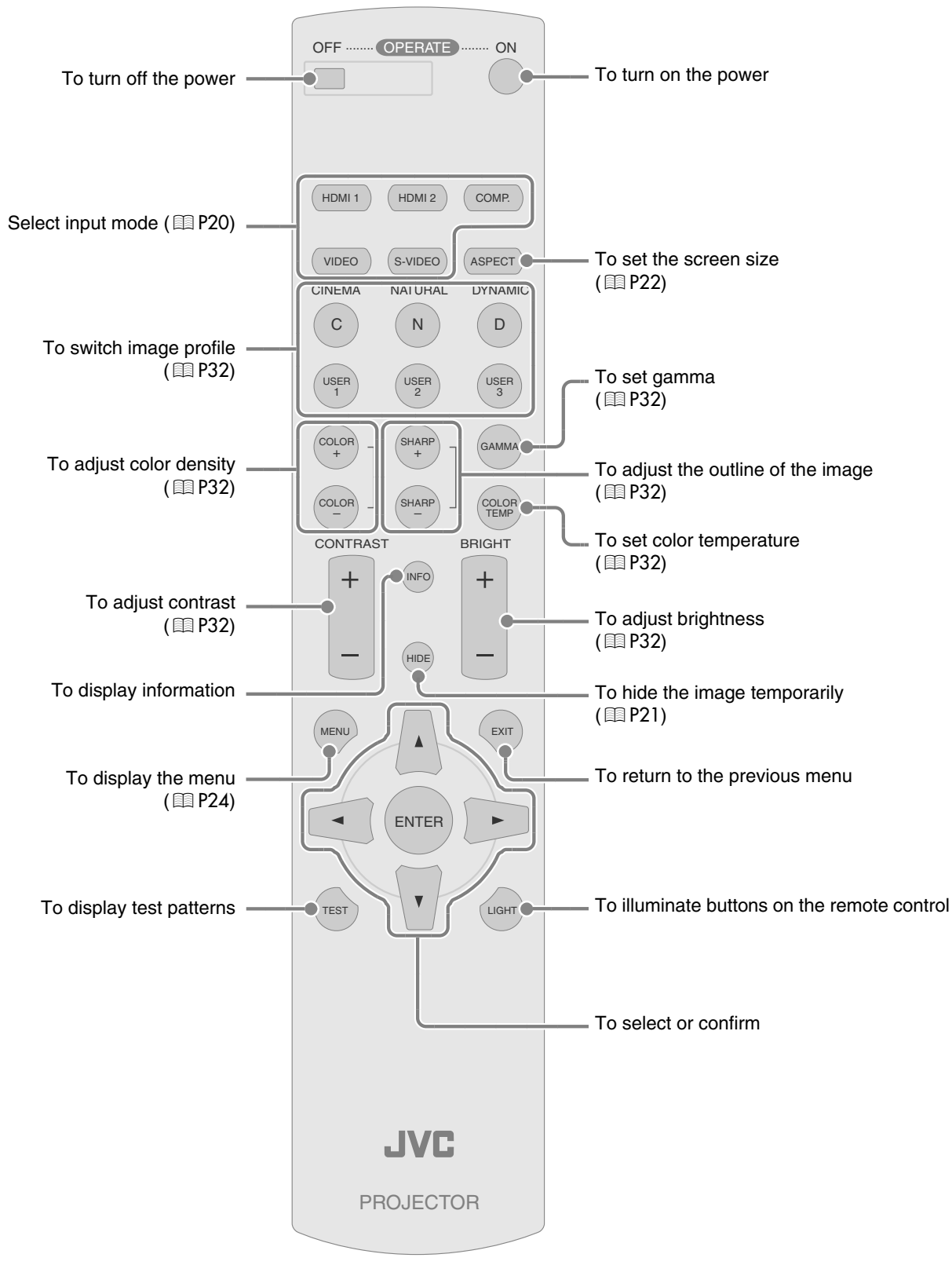

How to Use the Remote Control

Loading Batteries

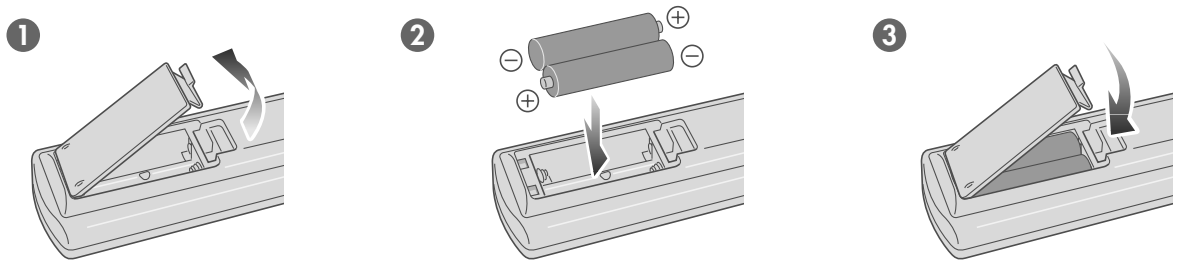

- If the remote control has to be brought closer to the projector to operate, it means that the batteries are wearing out. When this happens, replace the batteries. Insert the batteries according to the ⊕⊖ marks.
- Be sure to insert the ⊖ end first.
- If an error occurs when using the remote control, remove the batteries and wait for 5 minutes. Load the batteries again and operate the remote control.

Effective Range of Remote Control Unit

■ When directing the remote control toward this unit

- When aiming the remote control towards the remote sensor on this unit, ensure that the distance to the sensor in front or at the rear of this unit is within 7 m.
- If the remote control fails to work properly, move closer to this unit.

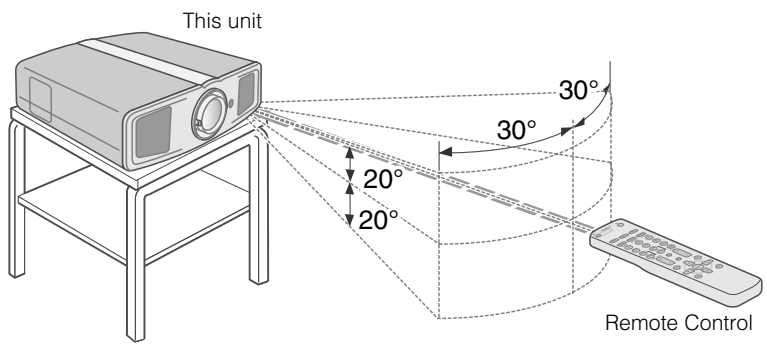

■ When reflecting off a screen

- Ensure that total of distance A between this unit and screen and distance B between remote control and screen is within 7 m.
- As the efficiency of signals reflected from the remote control unit differ with the type of screen used, operable distance may decrease.

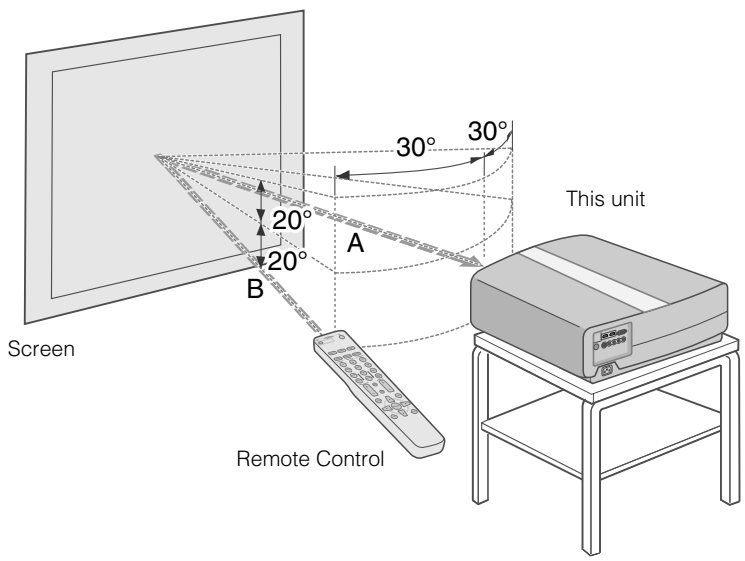

Installing the Projector and Screen

Install this unit and the screen. Place this unit and the screen perpendicular to each other. Failing to do so may give rise to trapezoidal distortion of the projected image.

1 *Install the projector and screen*

■ Left/Right position

∗0 % up/down position (center)

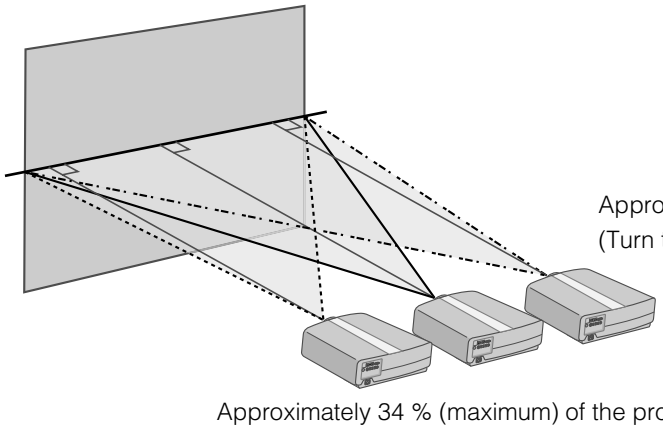

Approximately 34 % (maximum) of the projected image
(Turn the dial to the right for maximum)

Approximately 34 % (maximum) of the projected image
(Turn the dial to the left for maximum)

■ Up/Down position

∗0 % left/right position (center)

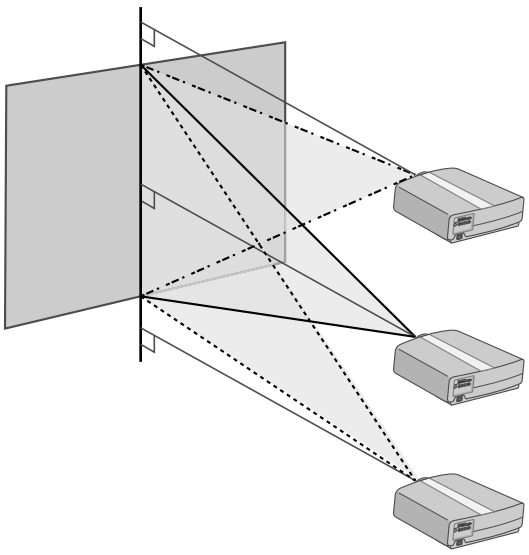

Approximately 80 % (maximum) of the projected image
(Turn the dial to the left for maximum)

Approximately 80 % (maximum) of the projected image
(Turn the dial to the right for maximum)

■ Shifting range of projected image

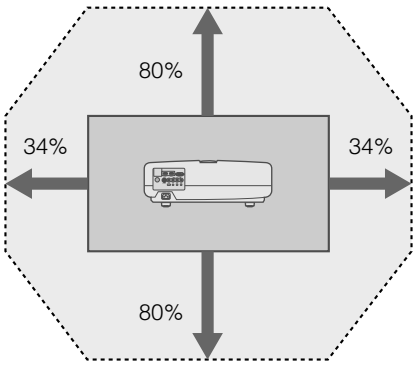

2 Adjust such that the projected image is in the center of the screen

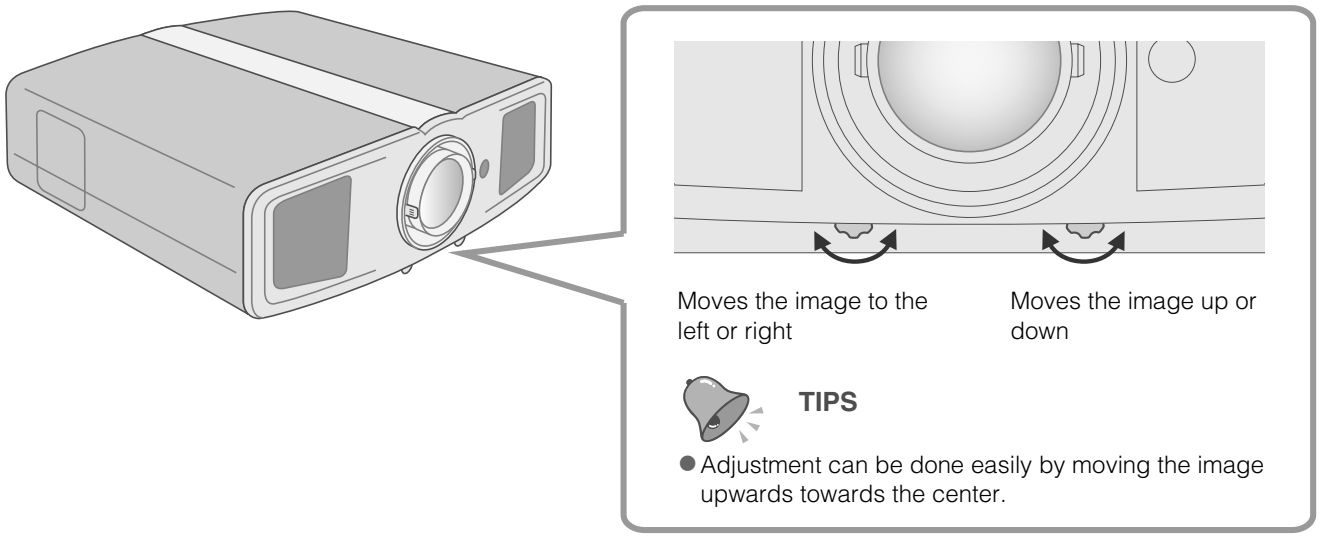

● It may be necessary to set "Pixel Adjust" in the setting menu after adjusting the image position. (P27 - 10)

Screen Size and Projection Distance

Determine the distance from the lens to the screen to achieve your desired screen size.
This unit uses a 2.0x manual zoom lens for projection.

■ Relationship Between Projection Screen Size and Projection Distance

Projection Screen Size (Diagonal Length) Aspect Ratio 16:9	Approximate Projection Distance W (Wide) to T (Tele)		
60" (Approx. 1.52 m)	Approx. 1.78 m	to	Approx. 3.63 m
70" (Approx. 1.78 m)	Approx. 2.09 m	to	Approx. 4.24 m
80" (Approx. 2.03 m)	Approx. 2.40 m	to	Approx. 4.86 m
90" (Approx. 2.29 m)	Approx. 2.71 m	to	Approx. 5.47 m
100" (Approx. 2.54 m)	Approx. 3.01 m	to	Approx. 6.08 m
110" (Approx. 2.79 m)	Approx. 3.32 m	to	Approx. 6.70 m
120" (Approx.3.05 m)	Approx. 3.63 m	to	Approx. 7.31 m
130" (Approx. 3.30 m)	Approx. 3.93 m	to	Approx. 7.93 m

Projection Screen Size (Diagonal Length) Aspect Ratio 16:9	Approximate Projection Distance W (Wide) to T (Tele)		
140" (Approx. 3.56 m)	Approx. 4.24 m	to	Approx. 8.54 m
150" (Approx. 3.81 m)	Approx. 4.55 m	to	Approx. 9.16 m
160" (Approx. 4.06 m)	Approx. 4.86 m	to	Approx. 9.77 m
170" (Approx. 4.32 m)	Approx. 5.16 m	to	Approx. 10.38 m
180" (Approx. 4.57 m)	Approx. 5.47 m	to	Approx. 11.00 m
190" (Approx. 4.83 m)	Approx. 5.78 m	to	Approx. 11.61 m
200" (Approx. 5.08 m)	Approx. 6.08 m	to	Approx. 12.23 m

● The projection distances in the table are provided only as a guide. Use them as a reference during installation.
● To adjust the installation, use a projected image of aspect ratio 16:9.

Projecting Image

This section describes the basic operations to project input images on the screen.

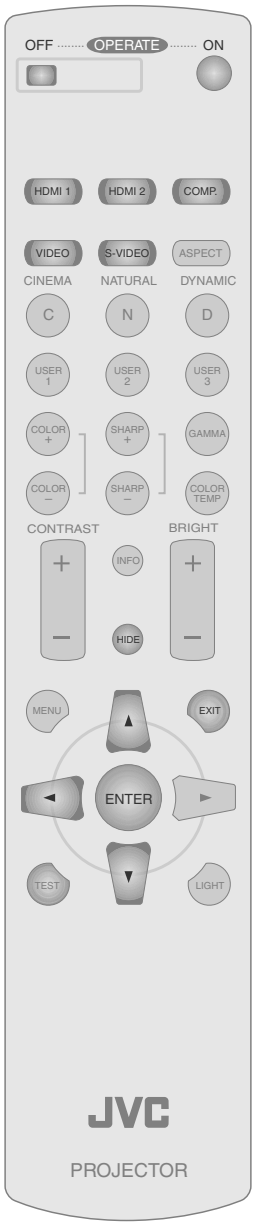

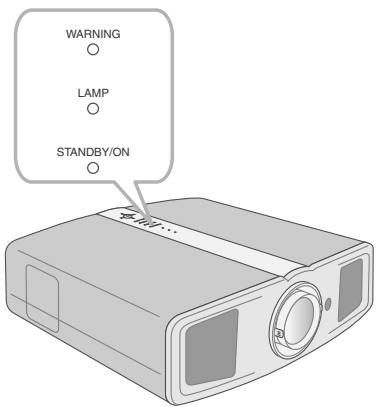

Preparation

- Remove the lens cap.

1 Insert the power plug to the power outlet

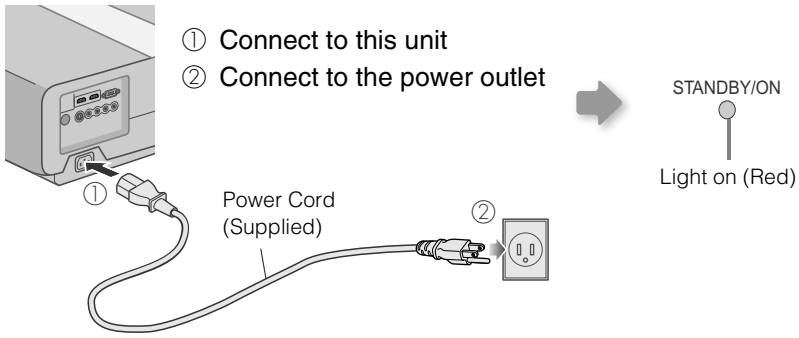

2 Turn on the power

- You can also press the [STANDBY/ON] button on the unit to turn on the power. (P11)

3 Project the image

1 Select input mode

- You can also select the input mode by pressing the [INPUT] button on the unit. (P11)

2 Play back the selected device

4 Adjust the position of the projection screen

- See “Installing the Projector and Screen” for procedures on adjusting the position. (P18)

5 Adjust the image size (zoom)

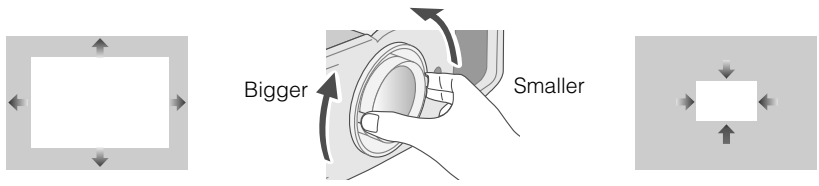

Hold and rotate the tab

6 Adjust the focus

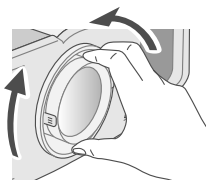

Turn the ring and adjust

7 Turn off the power

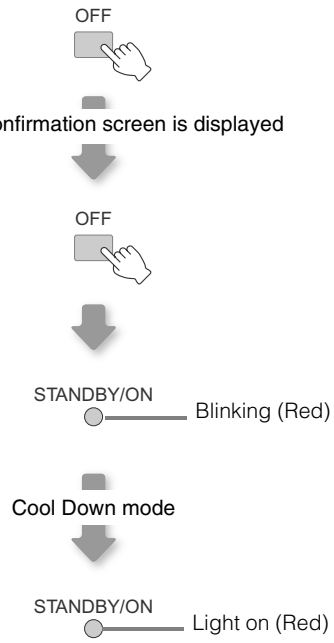

- The power cannot be turned off within approximately 90 seconds after it has been turned on. Start operation only after 90 seconds time.
- You can also press the [STANDBY/ON] button on the unit to turn off the power. (P11)
- Put back the lens cap after use to prevent the lens from dirt.
- Pull out the power plug when the unit will not be used for a prolonged time.

TIPS

You can hide the image temporarily

You can hide the image temporarily.

- Press the [HIDE] button again to display image.
- The power cannot be turned off when the image is temporarily hidden.

MEMO

About Cool Down mode

- The Cool Down mode is a function to cool down the lamp for approximately 60 seconds after projection is complete.
  This function prevents the internal parts of the unit from deformation or damage due to overheating of the lamp. It also prevents lamp blowout and premature shortening of lamp life.
- During Cool Down mode, the [STANDBY/ON] indicator blinks in red.
- After the Cool Down mode is complete, the unit automatically returns to standby mode.
- Do not pull out the power plug during Cool Down mode. This may shorten the lamp life and cause a malfunction.

Convenient Features during Projection

You can change the screen size of the projected image or hide the surrounding area of an image for which quality at the outer area has deteriorated.

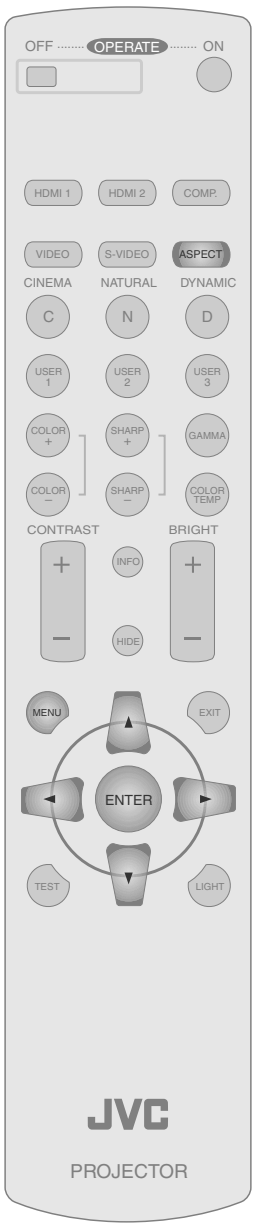

Setting the Screen Size

The projected image can be set to a most appropriate screen size (aspect ratio).

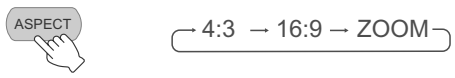

- The screen size can also be set from “Aspect” of the setting menu. (P29 - 19)
- When high definition images are input, the screen size is fixed at “16:9”.

■ Input Image and Projected Image by Different Screen Size Settings

Input Image	Screen Size		
	4:3	16:9	Zoom
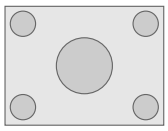 SDTV(4:3)	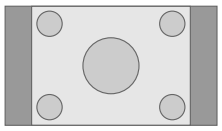 Aspect Ratio: Same **Most appropriate screen size**	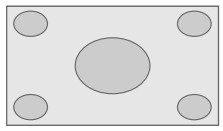 Aspect Ratio: Landscape Image is stretched horizontally	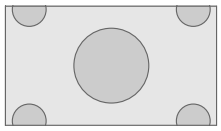 Aspect Ratio: Same Top and bottom of the image are missing
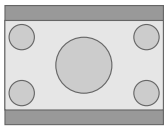 SDTV(4:3) Image recorded in landscape (black bands on top and bottom) of DVD software	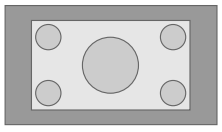 Aspect Ratio: Same Small image is projected	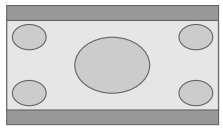 Aspect Ratio: Landscape Image is stretched horizontally	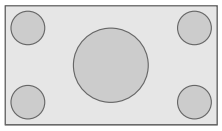 Aspect Ratio: Same **Most appropriate screen size**

- Depending on the input image, selecting “4:3” may result in a vertically stretched image while selecting “16:9” provides you with the most appropriate screen size.

Masking the Surrounding Area of an Image

Images for which quality at the outer area has deteriorated can be projected by masking (hiding) the surrounding area of the projected image.

1 *Project the image*

⬅Image for which quality at the outer area has deteriorated.

2 Mask the image

1 Display the setting menu

2 Select “Setup” ➡ “Mask”

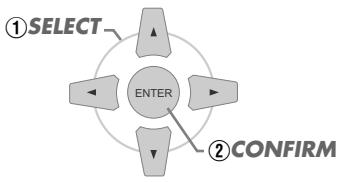

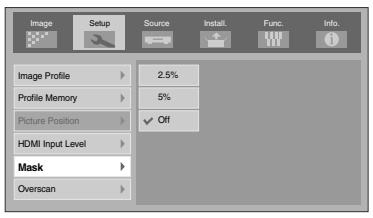

3 Set a mask value

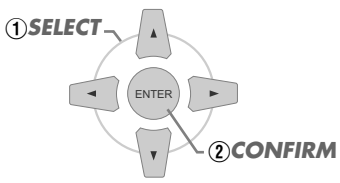

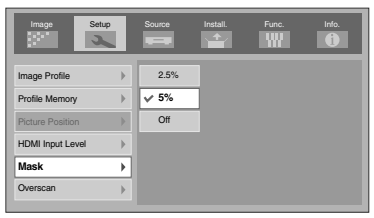

Example:

When the “Mask” value is changed from “Off” ➡ “5%”

3 To end

MEMO

- Masking is available only when high definition images are input.

Setting Menu

Projected images can be adjusted to a desired view by changing the default settings.

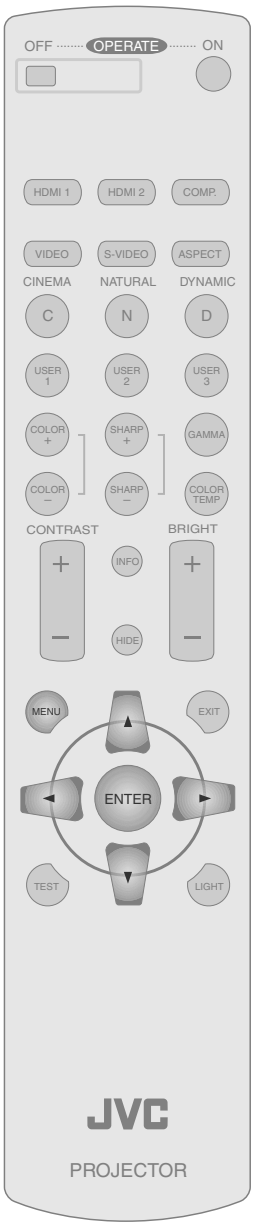

Procedures for Menu Operation

Example:

When changing “Aspect” from “4:3” to “16:9”

1 Display the setting menu

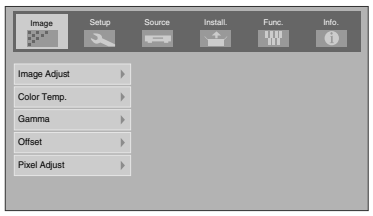

2 Select “Source” ➡ “Aspect”

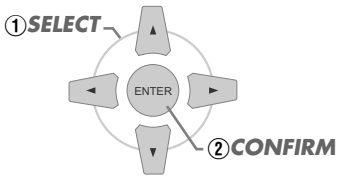

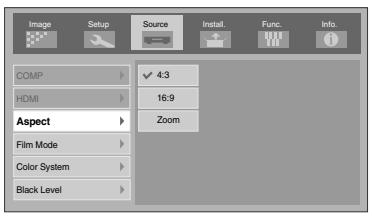

3 Set to “16:9”

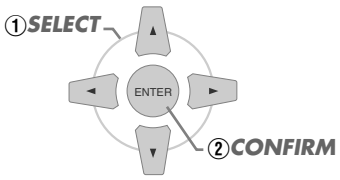

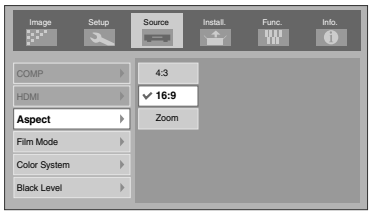

4 To end

Setting Menu

Item values shown in ▒▒▒▒ are factory settings.

● Items that can be configured differ according to the input signals.

Image > Image Adjust
01 Contrast
Adjusts the contrast of the projected image.
(Black) −50 to 50 (White)
02 Brightness
Adjusts the brightness of the projected image.
(Darken) −30 to 30 (Brighten)
03 Color
Adjusts the color density of the projected image.
(Lighten) −50 to 50 (Darken)
04 Tint
Adjusts the hue of the projected image.
(Red) −30 to 30 (Green)
05 Sharpness
Adjusts the outline of the projected image.
(Soft) −30 to 30 (Sharp)
06 DNR
Adjusts the strength of noise removal of the projected image.
(Weak) 0 to 30 (Strong)

● "Contrast", "Brightness", "Color" and "Sharpness" can also be configured from the remote control. (📖 P12)

● "Tint" can only be adjusted when NTSC signals are input to the video or S-video input terminal.

Image > Color Temp.			
07 Color Temp.			
Sets the color temperature of the projected image.			
	Low	Select this to give a reddish tinge to the image.	
	Middle	Select this to have a balanced image.	
	High	Select this to give a bluish tinge to the image.	
	Memory1*	Red	(Less red) −255 to 0 (More red)
		Green	(Less green) −255 to 0 (More green)
		Blue	(Less blue) −255 to 0 (More blue)
	Memory2*	Red	(Less red) −255 to 0 (More red)
		Green	(Less green) −255 to 0 (More green)
		Blue	(Less blue) −255 to 0 (More blue)

* The red, green and blue colors can be adjusted and registered respectively.

● This setting can also be configured from the remote control. (📖 P12)

Setting Menu (Continued)

Image > Gamma		
08 Gamma		
Sets the gradation characteristics of the projected image.		
Normal	For normal circumstances, select this setting.	
Theater1	Sets gamma to “Theater1”.	
Theater2	Sets gamma to “Theater2”.	
Dynamic	Select this when in well-lighted areas (such as living room) or when playing games.	
Custom (Gamma Setup)	The gamma can be set according to your preferences.	
	Correction Value	The coefficient (1.8 to 2.6) of the gamma curve can be selected.
	Gamma Adjust *	The gamma curve for the colors (R, G, B) can be adjusted separately. Adjusting “W” will adjust for all “R, G, B” values. Gamma curves are represented by a “G”.
	Save	Saves the adjusted gamma data.
	Load	Loads the gamma data that was saved.
	All Reset	Returns the gamma coefficients to the values set by “Correction Value”.

- “Normal” is suitable for normal circumstances but other settings can be selected according to your preferences.
- This setting can also be configured from the remote control. (P12)

∗“Gamma Adjust”

① Select the reference gamma curve coefficient (1.8 to 2.6) in “Correction Value”.

② Select the color to be adjusted in the gamma adjustment screen.

③ Adjust the gamma curve in the gamma curve adjustment screen.

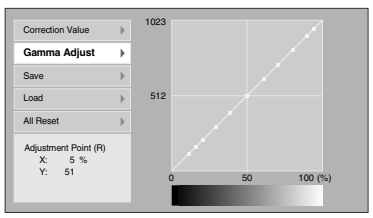

Select the point where the gradation (brightness) is to be adjusted with the ◀ / ▶ buttons.

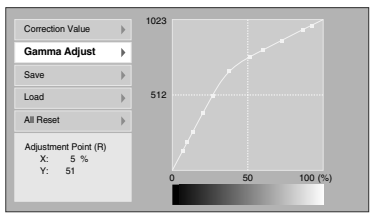

Adjust the gradation (brightness) with the ▲ / ▼ buttons.

④ To end

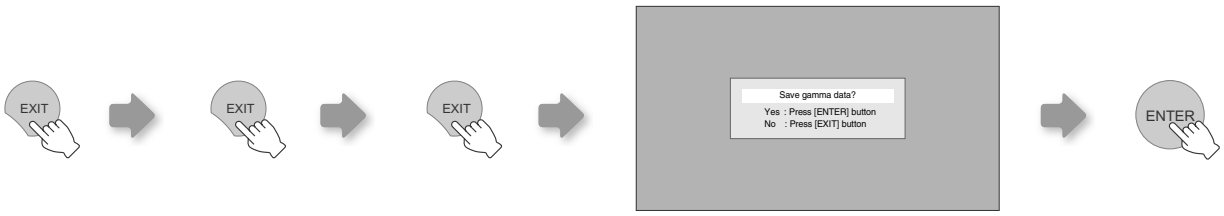

- If gamma curve is adjusted repeatedly, calculation errors will be accumulated and the gamma curve may not be able to revert back to its original form. In that case, select the coefficient in “Correction Value” again or retrieve the previous gamma data using “Load”.

Image > Offset		
09 Offset		
Adjusts the respective brightness of the red, green and blue colors in dark image areas. (Offset level)		
	Red	(Less red) −60 to 60 (More red)
	Green	(Less green) −60 to 60 (More green)
	Blue	(Less blue) −60 to 60 (More blue)

Image > Pixel Adjust		
10 Pixel Adjust		
Makes fine adjustments of 1 pixel unit for each minor color shift in the horizontal/vertical direction of the image.		
	Horiz. Red	(Moves red to left) 1 to 7 (Moves red to right)
	Horiz. Green	(Moves green to left) 1 to 7 (Moves green to right)
	Horiz. Blue	(Moves blue to left) 1 to 7 (Moves blue to right)
	Vert. Red	(Moves red down) 1 to 5 (Moves red up)
	Vert. Green	(Moves green down) 1 to 5 (Moves green up)
	Vert. Blue	(Moves blue down) 1 to 5 (Moves blue up)

- The horizontal and vertical directions are reversed when the image is flipped to the left or right, or flipped up or down.
- To adjust, use still images with distinct outlines.
- As the adjustments are minor, the effect may be difficult to see for some images.

Setup > Image Profile		
11 Image Profile		
Configures the image profile. (📖 P32)		
	Cinema	Select this to view images with movie quality in a dark room.
	Natural	Select this to view projected images with quality as-is in a dark room.
	Dynamic	Select this to view images with clear quality in a bright room.
	User1	Selects image profile registered in “User1”.
	User2	Selects image profile registered in “User2”.
	User3	Selects image profile registered in “User3”.

- This setting can also be configured from the remote control. (📖 P12)

Setup > Profile Memory		
12 Profile Memory		
Registers or deletes image profiles.		
	Save User1	Registers image profile in “User1”.
	Save User2	Registers image profile in “User2”.
	Save User3	Registers image profile in “User3”.
	Clear User1	Returns image profile in “User1” to factory setting (natural).
	Clear User2	Returns image profile in “User2” to factory setting (natural).
	Clear User3	Returns image profile in “User3” to factory setting (natural).
	Reset Cinema	Returns image profile in “Cinema” to factory setting.
	Reset Natural	Returns image profile in “Natural” to factory setting.
	Reset Dynamic	Returns image profile in “Dynamic” to factory setting.

- “Contrast”, “Brightness”, “Color”, “Sharpness”, “DNR”, “Color Temp.”, “Gamma” and “Offset” are registered in “Image Profile”.

Setting Menu (Continued)

Setup > Picture Position	
13 Picture Position	
Adjusts the horizontal/vertical position of the projected image.	

- The display position value varies with the input signal.
- This adjustment is available only for analog input signals.

Setup > HDMI Input Level	
14 HDMI Input Level	
Configures the input level setting of the HDMI input terminal.	
Standard	For normal circumstances, select this setting.
Enhanced	Select this setting when the black-and-white of the projected image is unclear when RGB video signals are input from DVI devices.

- This setting is available only when projecting the HDMI input.

Setup > Mask	
15 Mask	
Masks (Hides) the outer area of the projected image.	
2.5%	Masks 2.5 % of the screen.
5%	Masks 5 % of the screen.
Off	No masking.

- Masking is available only when high definition images are input.

Setup > Overscan	
16 Overscan	
Selects whether or not to set overscan for the 4:3 video signals (NTSC, PAL, SECAM, 480i, 576i, 480p and 576p).	
Off	No overscan.
On	Overscans the top, left, bottom and right at 2.5 % each.

Source > COMP	
17 COMP	
Configures the input signals of the component video input terminals.	
Y Pb/Cb Pr/Cr	Select this when component video signals are input.
RGB	Select this when RGB video signals are input.
SCART	Select this when RGB video signals and sync signals are input from SCART plug for European market.

- This setting is available only when projecting the component video input.

Source > HDMI	
18 HDMI	
Configures the input signals of the HDMI input terminal.	
Auto	Automatically configures input signals.
YCbCr(4:4:4)	Select this when Y Cb Cr (4:4:4) video signals are input.
YCbCr(4:2:2)	Select this when Y Cb Cr (4:2:2) video signals are input.
RGB	Select this when RGB video signals are input.

- This setting is available only when projecting the HDMI input.

Source > Aspect	
19 Aspect	
Configures the screen size (aspect ratio) of the projected image.	
4:3	Sets screen size of the projected image to 4:3.
16:9	Sets screen size of the projected image to 16:9.
Zoom	Zooms the image.

- When high definition images are input, the screen size is fixed at “16:9”.
- This setting can also be configured from the remote control. (P12, 22)

Source > Film Mode	
20 Film Mode	
Select this to view movies shot on film.	
Auto	For normal circumstances, select this setting.
Off	Select this when you are not watching movies shot on film.

Source > Color System	
21 Color System	
Configures the color system.	
Auto	Configures the color system automatically.
NTSC	Select this when the color system is NTSC.
NTSC4.43	Select this when the color system is NTSC4.43.
PAL	Select this when the color system is PAL.
PAL-M	Select this when the color system is PAL-M.
PAL-N	Select this when the color system is PAL-N.
SECAM	Select this when the color system is SECAM.

- This setting is available only when projecting the video or S-video input.

Source > Black Level	
22 Black Level	
Configures the black level.	
0 %	Select this when the gradation of the dark portions of an image is indistinct with the 7.5 % setting.
7.5 %	Select this when the dark portions of an image appear washed out with the 0 % setting.

- This setting can only be adjusted when NTSC signals are input to the video or S-video input terminal.

Install. > Menu Position	
23 Menu Position	
Sets the display position of the menu.	
Upper left	Displays menu on the upper left of the screen.
Upper center	Displays menu on the upper center of the screen.
Upper right	Displays menu on the upper right of the screen.
Left center	Displays menu on the left center of the screen.
Center	Displays menu on the center of the screen.
Right center	Displays menu on the right center of the screen.
Lower left	Displays menu on the lower left of the screen.
Lower center	Displays menu on the lower center of the screen.
Lower right	Displays menu on the lower right of the screen.

Setting Menu (Continued)

Install. > Menu Display	
24 Menu Display	
Sets the duration for displaying the menu.	
15 sec	Displays for 15 seconds.
On	Always display.

Install. > Line Display	
27 Line Display	
Sets whether to display the input when switching input.	
5 sec	Displays for 5 seconds.
Off	Do not display.

Install. > Flip H	
28 Flip H	
Select this when the image is projected from the back of the screen or when the projector is hung from the ceiling.	
On	Flips image to the left or right.
Off	Do not flip image to the left or right.

Install. > Flip V	
29 Flip V	
Select this when the projector is hung from the ceiling.	
On	Flips image up or down.
Off	Do not flip image up or down.

Install. > High Altitude Mode	
30 High Altitude Mode	
Select this when using the projector in a location of low atmospheric pressure (higher than 900 meters above sea level).	
On	Activate.
Off	Do not activate.

Func. > Back Color	
31 Back Color	
Configures the screen color displayed when there is no input signal.	
Blue	Sets screen color to “Blue”.
Black	Sets screen color to “Black”.

Func. > Sleep Timer	
32 Sleep Timer	
Sets the lapse time before automatically switching to the standby mode when there is no input signal.	
15	Switch to standby mode after 15 minutes.
30	Switch to standby mode after 30 minutes.
60	Switch to standby mode after 60 minutes.
Off	Do not switch to standby mode.

Func. > Logo

33 Logo

Sets whether to display “Logo” during startup.

Off	Do not display.
On	Displays for 5 seconds.

Func. > Lamp Power

34 Lamp Power

Configures the output of the light-source lamp.

Normal	For normal circumstances, select this setting. (170 W)
High	Select this when it is difficult to see the image in a bright room. (200 W)

- Changing the lamp power will not change the lamp time (lamp life).
- The setting cannot be changed within approximately 90 seconds after this unit has been turned on.
- Settings cannot be changed within approximately 60 seconds after they are made.

Func. > Test Pattern

35 Test Pattern

Displays 6 types of test patterns.

- This can also be displayed from the remote control. (📖 P12)

Func. > Language

36 Language

Sets the language of the menu display.

日本語	Japanese
English	English
Deutsch	German
Español	Spanish
Italiano	Italian
Français	French
Português	Portuguese
Nederlands	Dutch
Svenska	Swedish
Norsk	Norwegian
中文	Chinese (Simplified)

Info.

37 Input

Displays the currently selected video input.

38 Format

Displays the types of the current input video signals.

39 Lamp Time

Displays the accumulated hours of usage of the light-source lamp.

- This can also be displayed from the remote control. (📖 P12)

Customizing Projected Images

You can adjust the projected image to a desired image quality and register the adjusted value. (Image Profile) Besides the default "Cinema", "Natural" and "Dynamic" settings, there are 3 more types of user-defined settings for image profile.

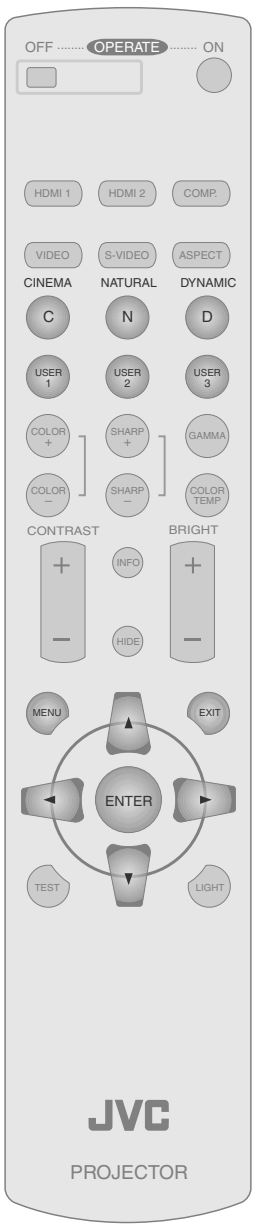

Changing the Default Image Profile Values

"Contrast", "Brightness", "Color", "Sharpness", "DNR", "Color Temp.", "Gamma" and "Offset" are registered in the image profile.

1 *Select the image profile*

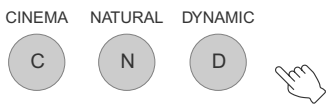

2 *Adjust image quality*

Example: To adjust "Contrast"

1 Display the setting menu

2 Select "Image" ➡ "Image Adjust" ➡ "Contrast"

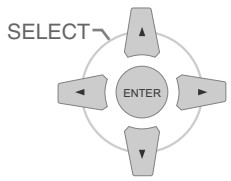

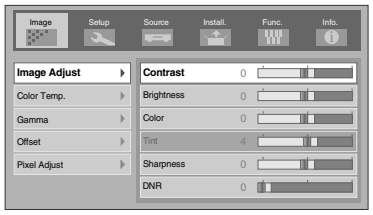

3 Adjust the setting

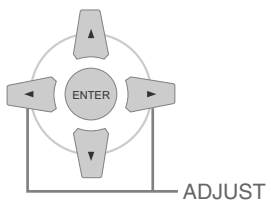

4 To end the adjustments

3 *Other items can also be adjusted*

4 *To end*

- "Contrast", "Brightness", "Color", "Sharpness", "Color Temp." and "Gamma" can also be adjusted from the remote control. (📖 P12)
- To return to the default values, reset the registered settings with "Profile Memory" in the setting menu. (📖 P27 - 12)

Registering User-defined Image Profiles

1 Select the image profile

2 Adjust image quality

- See "Changing the Default Image Profile Values" for procedures on adjusting the image quality. (P32)

3 Register the image profile

1 Display the setting menu

2 Select "Setup" ➡ "Profile Memory"

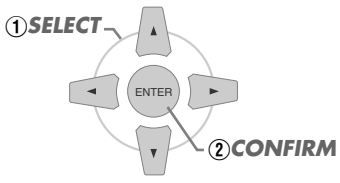

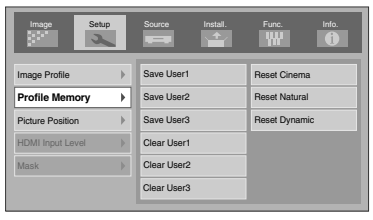

3 Register the setting

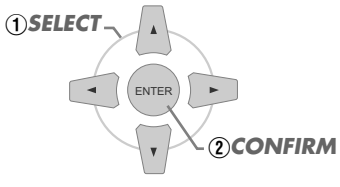

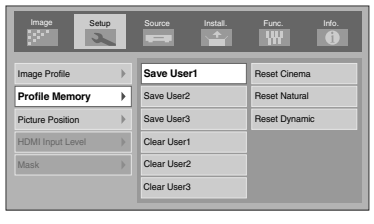

4 To end

- To return to the default values, reset the registered settings with "Profile Memory" in the setting menu. (P27 - 12)

CAUTION

- Adjustment settings of image quality will not be registered if other image profiles are selected before registering these settings.

Troubleshooting

Before sending the unit to your authorized dealer for repair, check the following points.

The following situations are not malfunctions.

■ You do not need to worry under the following situations if there is no abnormality on the screen.
- Part of the top surface or front of the unit is hot.
- A creaking sound is heard from the unit.
- An operating sound is heard from the internal of the unit.

■ Perform the following operations when the unit is unable to operate normally due to external static or noises.
① When the unit is in standby mode, pull out the power plug, then insert again.
② Press the power button on the unit to turn on the power again.

■ A sound may be heard when the lamp is off but there is no danger.

■ D-ILA device is manufactured using high-precision technology but there may be some missing pixels or pixels that remain permanently lit up.

Power is not supplied		
Is the power cord disconnected?	Insert the power cord (plug) firmly.	📖 P20
Is the lamp cover properly shut?	Remove the power plug when the unit is in standby mode and close the lamp cover properly. After that, insert the plug again.	📖 P39
Is the lamp in Cool Down mode?	After the Cool Down mode is complete, turn on the power again.	📖 P21

Projected image is dark		
Is the lamp near exhaustion?	Check the lamp time on the information menu. Prepare a new lamp unit or replace as soon as possible when the lamp is near exhaustion.	📖 P38 - 40

The unit works when power is turned on but stops abruptly after a few minutes		
Are the air inlets and exhaust vent blocked?	Remove the power plug when the unit is in standby mode and remove any blocking object. After that, insert the plug again.	📖 P2, 10
Is the filter dirty?	Clean the filter.	📖 P41

Video image does not appear		
Is the lens cap removed?	Remove the lens cap.	📖 P20
Is the correct external input selected?	Select the correct external input.	📖 P20
Is the AV device properly connected?	Connect the AV device properly.	📖 P14 - 17
Is the power of the AV device turned on?	Turn on the power of the AV device and play the video.	📖 P20
Are the correct signals being output from the AV device?	Set the AV device properly.	📖 P14 - 17
Is the setting of the input terminal correct?	Set “COMP” and “HDMI” in the setting menu according to the input signal.	📖 P28 - 17 📖 P28 - 18
Is the video image temporarily hidden?	Press the [HIDE] button to display the video image again.	📖 P21

Color does not appear or looks strange		
Is the image correctly adjusted?	Adjust “Color” and “Tint” in the setting menu.	📖 P25 - 03 04

Video image is fuzzy		
Is the focus correctly adjusted?	Adjust accordingly using the focus adjustment ring.	P21
Is the unit placed too near or too far away from the screen?	Set the unit at a correct distance from the screen.	P18, 19

Video images are missing		
Has setting been performed for screen mask?	Set “Mask” in the setting menu to “Off”.	P23, 28 - 15
Is the display out of position?	Alter the “Picture Position” value in the setting menu to ensure that images are not missing.	P28 - 13

Remote control does not work		
Are batteries installed correctly?	Match the polarities (⊕ or ⊖) correctly when inserting the batteries.	P13
Are batteries exhausted?	Replace with new batteries.	P13
Is there an obstructive object between the remote control and remote sensor?	Remove any obstructive objects.	P13
Is the remote control held too far away from the unit?	Hold the remote control closer to the sensor when using.	P13

Power is cut off suddenly		
Has setting been performed for sleep time?	Set “Sleep Timer” in the setting menu to “Off”.	P30 - 32

What to Do When These Messages Are Displayed

Message	Cause (Details)
COMP No input	No device is connected to the input terminal. The input terminal is connected but there is no signal. ➡Input the video signals.
HDMI-2 Out of range	A video signal that cannot be used in this unit has been input. ➡Input video signals that can be used.
Lamp replacement EXIT	The message is displayed when the accumulated lamp time has exceeded 1900 hours. To clear the message, press the [EXIT] button. ➡Get ready a new lamp unit and replace as soon as possible.
Lamp replacement Warning EXIT	The message is displayed when the accumulated lamp time has exceeded 2000 hours. The message is displayed each time during projection. To clear the message, press the [EXIT] button. ➡Replace with a new lamp unit and reset the lamp time. (📖 P38 - 40)

About Warning Indicators

The accumulated lamp time or warning mode of this unit is displayed by the indicators.
For information on indicator display during normal operation, see "Controls and Features" (P10).

No.	Indicator		Content
	LAMP	WARNING	
1	Light on	–	Lamp replacement is near (P38 - 40) (When accumulated lamp time has exceeded 1900 hours)
2			Lamp has reached end of life (P38 - 40) (When accumulated lamp time has exceeded 2000 hours)
3	Blinking	Light on	Lamp does not light up and unit is unable to project
4			Lamp is turned off during projection
5			Lamp cover is removed
6	–	Light on	There is an error in the circuit operation (Operation error in microcomputer circuit)
7			There is an error in the circuit operation (Operation error in drive circuit)
8			Internal temperature is abnormally high (Internal temperature error)
9			External temperature is high (External temperature error)
10			Cooling fan has stopped (Fan locked)

Actions to Be Taken for Warning Mode

When the unit enters into warning mode (No. 3 to 10), it will automatically stop projection and run the cooling fan for about 60 seconds.
After the cooling fan has stopped, pull out the power plug from the power outlet.
Then, follow the procedures below.

No.	Check	Action
3	● Check that an impact shock has not occurred during operation. ● Check that the lamp unit and lamp cover are correctly installed.	Turn on the power again.
4		
5		
6	● Check that nothing is blocking the air inlets. ● Check that the external temperature is normal.	Leave the unit until it cools down. After that, turn on the power again.
7		
8		
9		
10		

If the warning indication is displayed again, wait for the cooling fan to stop. Then pull out the power plug from the power outlet.
Call your authorized dealer for repair.

Replacing the Lamp

The lamp is a consumable item. If the image is dark or the lamp is turned off, replace the lamp unit.

- When the lamp replacement time approaches, a message is displayed on the screen and the condition is indicated by the indicator. (P36, 37)

CAUTION

- Pull the power plug from the power outlet. Failure to do so may cause injuries or electric shocks.
- Do not replace the lamp immediately after the unit has been used. Allow a cooling period of 1 hour or more before replacement. The temperature of the lamp is still high and this may cause a burn.
- Do not apply shock to the lamp unit. It may cause lamp blowout.
- Do not use flammable air duster to clean the internal parts of the unit. This may cause fire.

MEMO

Usable Lamp Life

- The usable lamp life for this unit is approximately 2000 hours. The usable lamp life of 2000 hours is merely the average usable life of lamps and we do not provide any guarantee for this figure.
- The lamp life may not reach 2000 hours depending on the operating conditions.
- When the lamp has reached the end of its usable life, deterioration progresses rapidly.
- If the image is dark or the color tone is abnormal, replace the lamp unit as soon as possible.

Purchasing the Lamp Unit

Please consult your authorized dealer.

■ Lamp Unit
Part No. : BHL5009-S

Procedure for Lamp Replacement

1 Remove the lamp cover

- Remove the screws with a ⊕ screwdriver.

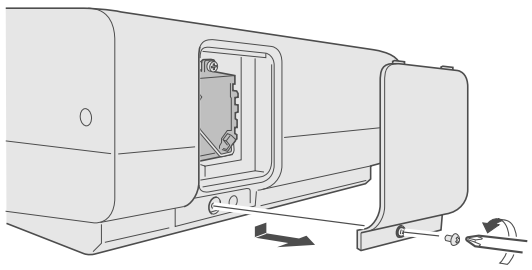

2 Loosen the screws on the lamp unit

- Loosen the screws with a ⊕ screwdriver.

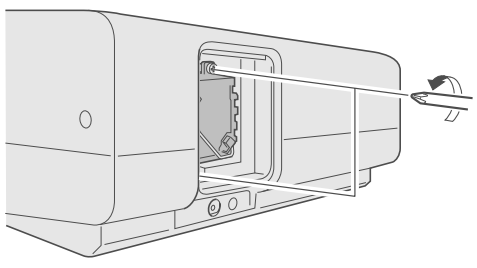

3 Pull out the lamp unit

- Grasp the handle and pull out the lamp unit.

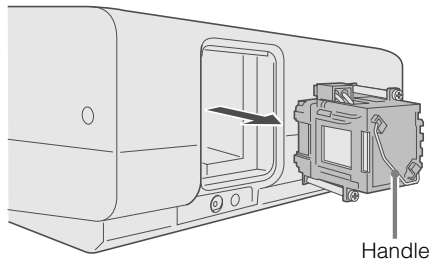

4 Install the new lamp unit

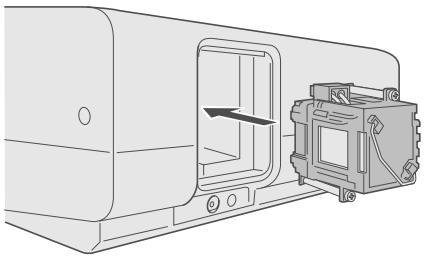

5 Tighten the screws of the lamp unit

- Fasten the screws with a ⊕ screwdriver.

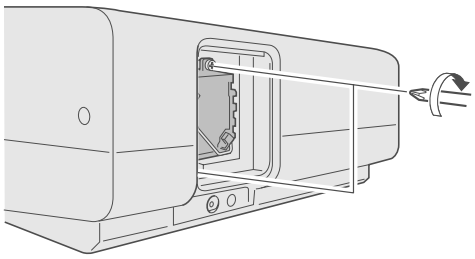

6 Attach the lamp cover

- Insert the top part (with 2 claws) of the lamp cover into the unit.
- Fasten the screws with a ⊕ screwdriver.

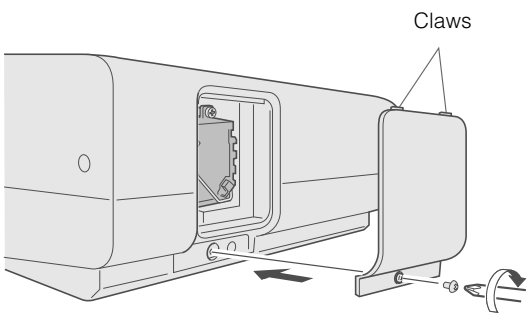

CAUTION

- Use only genuine replacement parts for the lamp unit. Also, never attempt to re-use an old lamp unit. This may cause a malfunction.
- Do not touch the surface of a new lamp. This may shorten the lamp life and cause lamp blowout.

MEMO

After Replacing the Lamp

- Do not place the removed lamp unit at locations reachable by children or near combustible items.
- Dispose used lamp units in the same way as fluorescent lamps. Follow your local community rules for disposal.

Replacing the Lamp (Continued)

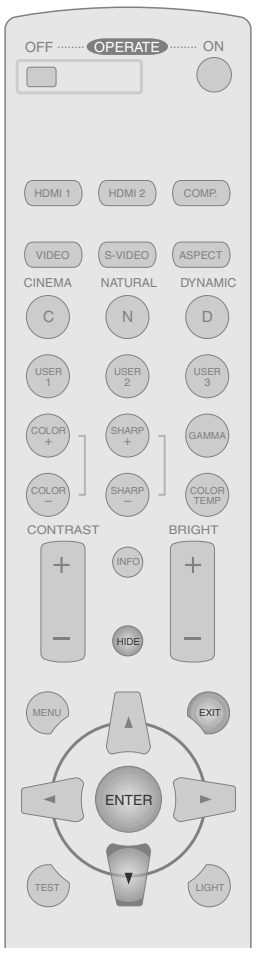

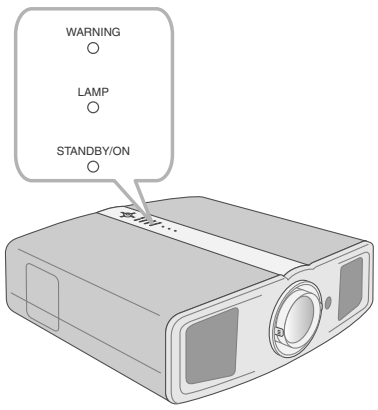

CAUTION

- Reset the lamp time only when you have replaced the lamp.
- Never reset it when the lamp is still in use. Otherwise, the approximate standard for gauging replacement time may be inaccurate and lamp blowout may occur.

Resetting Lamp Time

After installing a new lamp unit, reset the lamp time.

1 *Insert the power plug to the power outlet*

STANDBY/ON — Light on (Red)

2 *Reset lamp time*

- Press in the order as shown.
- Press each button within 2-second intervals and press the last button for 2 seconds or more.

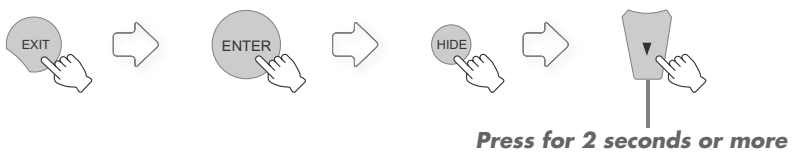

- The [LAMP] indicator and [STANDBY/ON] indicator blink alternately for 3 seconds. After that, the unit switches to standby mode.

Cleaning and Replacing the Filter

Clean the filter regularly or air intake efficiency may deteriorate and malfunction may occur.

1 Remove the inner filter

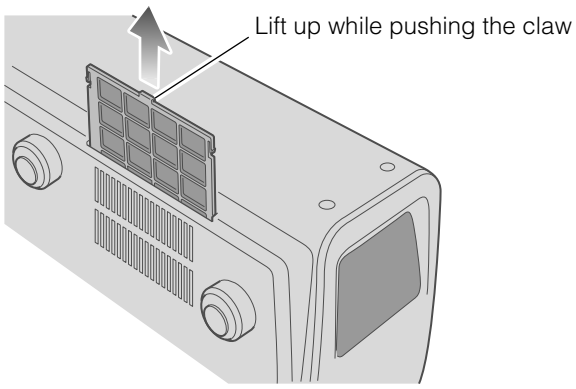

2 Clean the filter

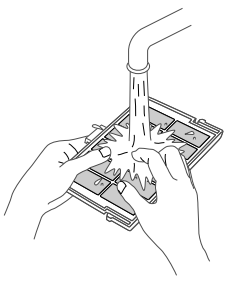

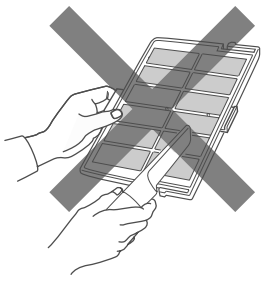

- Wash the filter with water and dry it in a shaded area.
- In extremely soiled cases, use of a neutral detergent is recommended. Put on rubber gloves when using a neutral detergent.
- After washing the filter with water, make sure that it is completely dry before reinstalling. Otherwise, electric shocks or malfunctions may occur.
- Do not clean the filter with a vacuum cleaner or air duster. The filter is soft and may be damaged.

3 Reinstall the inner filter

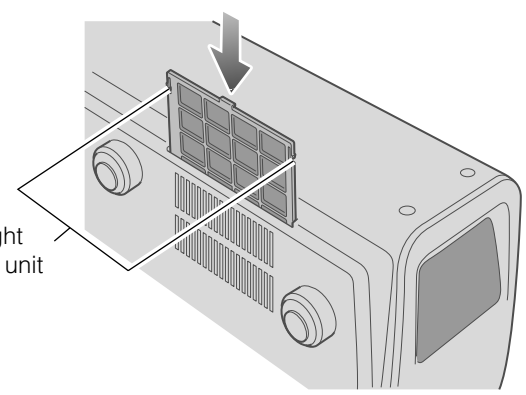

CAUTION

- Pull the power plug from the power outlet.

MEMO

If the filter is damaged or too dirty to be cleaned

- Replace with a new filter. A dirty filter will dirty the internal parts of the unit and cause shadows on the video image.
- To purchase a new filter or when there is dirt in the internal parts, consult your authorized dealer.

■ Inner Filter
Part No. : LC32058-002A

RS-232C Interface

Control of this unit via a computer is possible by connecting the computer to this unit with a RS-232C cross cable (D-Sub 9 pin).

RS-232C Specifications

This unit

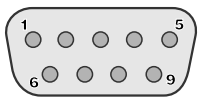

Pin No.	Signal	Operation	Signal Direction
2	RxD	Receive data	This unit ← PC
3	TxD	Transmit data	This unit → PC
5	GND	Signal ground	–
1, 4, 6 – 9	N/C	–	–

● PC refers to the controller such as a personal computer.

Mode	Non-synchronous
Character Length	8 bit
Parity	None
Start Bit	1
Stop Bit	1
Data Rate	19200 bps
Data Format	Binary

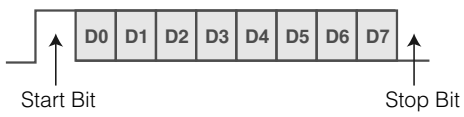

Command Format

The command between this unit and the computer consists of “Header”, “Unit ID”, “Command”, “Data” and “End”.

● Header (1 byte), Unit ID (2 bytes), Command (2 bytes), Data (n bytes), End (1 byte)

■ Header

This binary code indicates the start of communication.

Binary code	Type	Description
21	Operating command	PC → This unit
3F	Reference command	PC → This unit
40	Response command	This unit → PC
06	ACK	This unit → PC (When the command is accepted without error, it returns to PC)

■ Unit ID

This code specifies the unit. The binary code is fixed at “8901”.

■ Command and data

Operating command and data (Binary code)

Command	Type	Data description
0000	Connection check	Checks whether communication is available between this unit and the PC during standby.
5057	Power supply	During standby 31 : Turns on the power. During power on 30 : Turns off the power. (Standby mode)
4950	Input	During power on 30 : S-VIDEO 31 : VIDEO 32 : COMP. 36 : HDMI 1 37 : HDMI 2
4754	Gamma table	During power on 30 : Switches to “Normal”. 31 : Switches to “Theater1”. 32 : Switches to “Theater2”. 33 : Switches to “Dynamic”. 34 : Switches to “Custom”.
4750	Gamma coefficient	30 : 1.8 35 : 2.3 31 : 1.9 36 : 2.4 32 : 2.0 37 : 2.5 33 : 2.1 38 : 2.6 34 : 2.2
4752	Gamma data (R)	Sets the gradation (0 to 1023) of the output signal in hexadecimal. The data is 16 bit (2 byte) with the 2 byte data in the high/low order.
4747	Gamma data (G)	Same as gamma data (R).
4742	Gamma data (B)	Same as gamma data (R).
5453	Test pattern	During power on 30 : Do not display. 36 : Displays staircase (gray).
5243	Remote Control	Sends the same code as the supplied remote control. ● “Remote control code” (📖 P45)

RS-232C Interface (Continued)

Reference command and data (Binary code)

Command	Type	Data description
5057	Power supply	During standby or power on 30 : Standby mode 31 : Power-on mode 32 : During Cool Down mode 34 : Warning mode
4950	Input	During power on 30 : S-VIDEO 31 : VIDEO 32 : COMP. 36 : HDMI 1 37 : HDMI 2
4754	Gamma table	During power on 30 : “Normal” 31 : “Theater1” 32 : “Theater2” 33 : “Dynamic” 34 : “Custom”
4750	Gamma coefficient	30 : 1.8 35 : 2.3 31 : 1.9 36 : 2.4 32 : 2.0 37 : 2.5 33 : 2.1 38 : 2.6 34 : 2.2
4752	Gamma data (R)	Gradation of the output signal (0 to 1023)
4747	Gamma data (G)	Gradation of the output signal (0 to 1023)
4742	Gamma data (B)	Gradation of the output signal (0 to 1023)
5453	Test pattern	During power on 30 : Do not display. 36 : Staircase (gray).

■ End

This code indicates the end of communication. The binary code is fixed at “0A”.

■ Remote control code

● Binary code is sent during communication.

Remote control button name	Binary code
▲	37 33 30 31
▼	37 33 30 32
EXIT	37 33 30 33
OPERATE ON	37 33 30 35
OPERATE OFF	37 33 30 36
HIDE	37 33 31 44
MENU	37 33 32 45
ENTER	37 33 32 46
▶	37 33 33 34
◀	37 33 33 36
VIDEO	37 33 34 42
S-VIDEO	37 33 34 43
COMP.	37 33 34 44
TEST	37 33 35 39
CINEMA	37 33 36 39
NATURAL	37 33 36 41
DYNAMIC	37 33 36 42

Remote control button name	Binary code
USER1	37 33 36 43
USER2	37 33 36 44
USER3	37 33 36 45
HDMI 1	37 33 37 30
HDMI 2	37 33 37 31
INFO	37 33 37 34
GAMMA	37 33 37 35
COLOR TEMP	37 33 37 36
ASPECT	37 33 37 37
CONTRAST (+)	37 33 37 38
CONTRAST (−)	37 33 37 39
BRIGHT (+)	37 33 37 41
BRIGHT (−)	37 33 37 42
COLOR (+)	37 33 37 43
COLOR (−)	37 33 37 44
SHARP (+)	37 33 37 45
SHARP (−)	37 33 37 46

RS-232C Communication Examples

This section shows the communication examples of RS-232C.

■ Operating command

Type	Command	Description
Connection check	PC → This unit: 21 89 01 00 00 0A This unit → PC: 06 89 01 00 00 0A	Checks connection
Power (On)	PC → This unit: 21 89 01 50 57 31 0A This unit → PC: 06 89 01 50 57 0A	When power is turned on from standby mode
Power (Off)	PC → This unit: 21 89 01 50 57 30 0A This unit → PC: 06 89 01 50 57 0A	When power is turned off (standby mode) from power-on mode
Input (COMP.)	PC → This unit: 21 89 01 49 50 32 0A This unit → PC: 06 89 01 49 50 0A	When video input is set to component
Remote Control (MENU)	PC → This unit: 21 89 01 52 43 37 33 32 45 0A This unit → PC: 06 89 01 52 43 0A	When the same operation as pressing the [MENU] button on the remote control is made

■ Reference command

Type	Command	Description
Power (On)	PC → This unit: 3F 89 01 50 57 0A This unit → PC: 06 89 01 50 57 0A This unit → PC: 40 89 01 50 57 31 0A	When information on power-on mode is acquired
Input (S-VIDEO)	PC → This unit: 3F 89 01 49 50 0A This unit → PC: 06 89 01 49 50 0A This unit → PC: 40 89 01 49 50 30 0A	When information on S-VIDEO input is acquired

Copyright and Caution

About Trademarks and Copyright

- HDMI, HDMI logo and high definition multimedia interface are trademarks or registered trademarks of HDMI Licensing LCC.
- This product uses Ricoh TrueType fonts manufactured and sold by Ricoh Co., Ltd.

Caution

D-ILA Device Characteristics

Do not project still pictures or pictures that have still segments for a long period of time. The still parts of the picture may remain on the screen. This is a characteristic of D-ILA devices and not a malfunction. The picture will disappear over time.

When Unit is Unused for a Long Time

Prolonged disuse of the unit may effect an error on the functions. Turn on the power occasionally and operate the unit.

Viewing Advice

Looking at the screen continually for a prolonged time will cause your eyes to get tired. Allow your eyes to rest at intervals.

Usage Environment

- Avoid direct exposure of screen to direct sunlight and illumination. Block light using a curtain. Images can be well projected by darkening the brightness of the room.
- Do not use this unit in rooms with cigarette smoke or oily smoke. This may cause the unit to malfunction.

Parts Replacement

This unit contains parts (optical part, cooling fan, etc.) that require replacement to maintain its functioning. The estimated time for parts replacement varies greatly depending on the usage and environment. Please consult your authorized dealer for replacement.

Maintenance Procedures

Dirt on the cabinet

- Gently clean dirt on the cabinet with a soft cloth. In the case of heavy soiling, soak a cloth in water, wring dry and wipe, followed by wiping again with a dry cloth.
  Pay attention to the following as the cabinet may deteriorate in condition or paint may come off.
  - Do not wipe with thinner or benzene
  - Do not spray volatile chemicals like insecticide
  - Do not allow prolonged contact with rubber or plastic products

Dirt in the air inlets

- Use a vacuum cleaner to suck up the dirt. Otherwise, use a cloth to wipe off the dirt. If dirt is allowed to accumulate in the air inlets, the internal temperature cannot be adjusted and this may cause a malfunction.

Dirt on the lens

- Clean the dirt using commercial blowers or lens cleaning papers for cleaning glasses and cameras.
  Do not use fluid-type cleaning agents. This may lead to peeling of the surface coating film.

Transporting this Unit

Before transporting or shipping this unit, attach the buffer material on the top and bottom of the lens for protection. Failure to do so may subject the lens to shock causing damage.
Attach the buffer material after adjusting the lens to the center position.

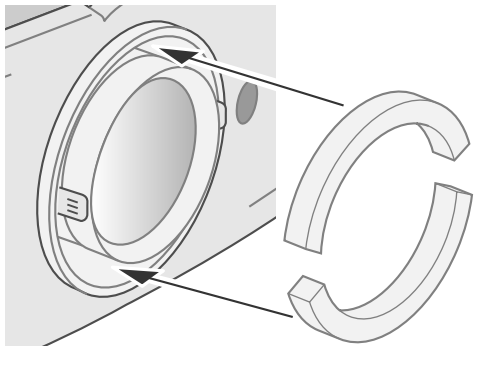

Mounting this Unit

Measures to prevent the unit from toppling or dropping should be taken for safety reasons and accident prevention during emergencies including earthquakes.

When mounting this unit on a pedestal or ceiling, remove the 4 feet on the bottom surface and use all the 4 screw holes (M5 screws) to mount.

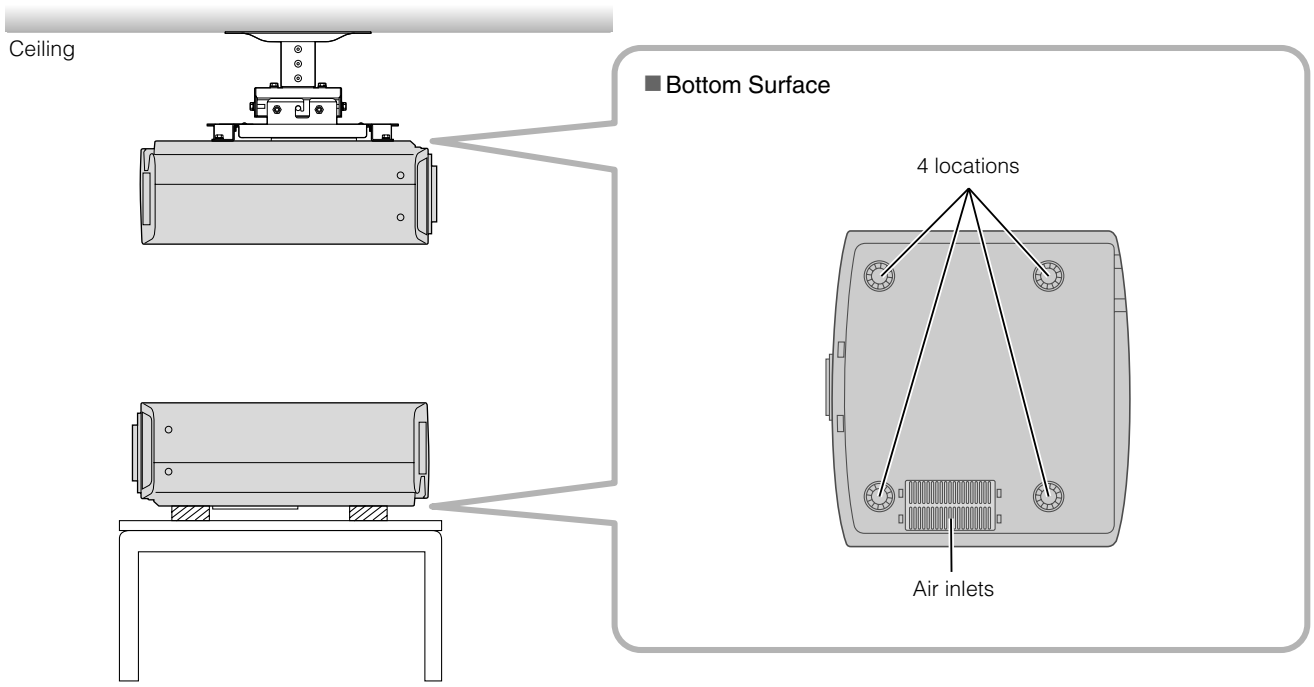

Precautions for Mounting

- Special expertise and techniques are required for mounting this unit. Be sure to ask your dealer or a specialist to perform mounting.
- Depth of the screw holes (screw length) is 30 mm. Use screws shorter than 30 mm but longer than 19 mm.
  Using other screws will result in malfunctioning or cause the unit to drop.
- When mounting to a pedestal, ensure sufficient space (foot height of 21.5 mm or higher) around the unit so that the air inlets are not blocked.
- Do not tilt this unit more than ±5 degrees from side to side when using. This may result in uneven colors or shortening of lamp life.
- Regardless whether the unit is still under guarantee, JVC is not liable for any product damage caused by mounting the unit with non-JVC ceiling fittings or when the environment is not suitable for ceiling-mount.
- When using the unit hanging from a ceiling, pay attention to the surrounding temperature. When a heater is in use, temperature around the ceiling is higher than expected.

Dimensions

(Unit: mm)

■ Top Surface

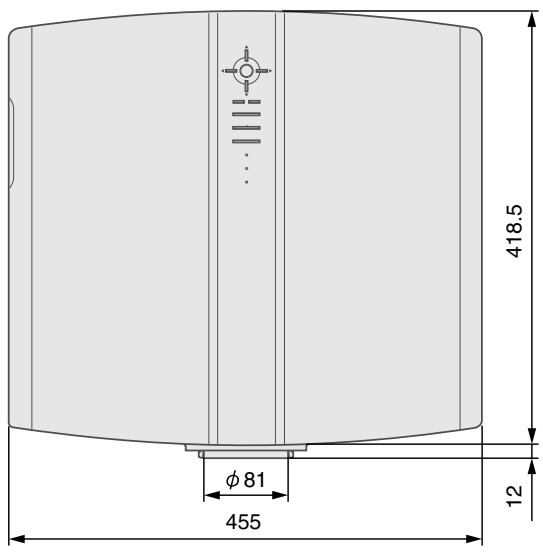

■ Bottom Surface

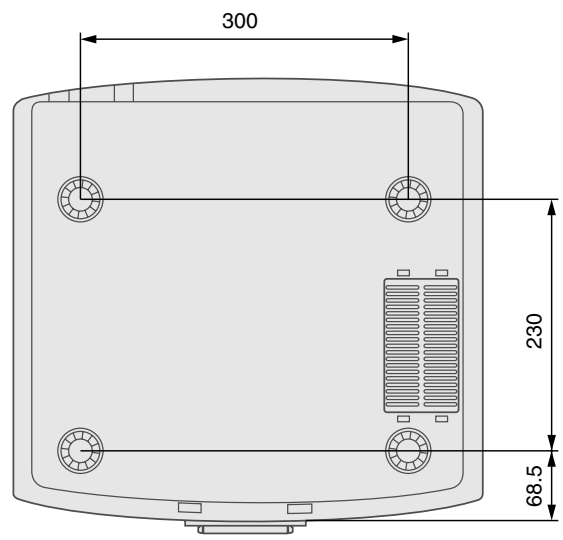

■ Front

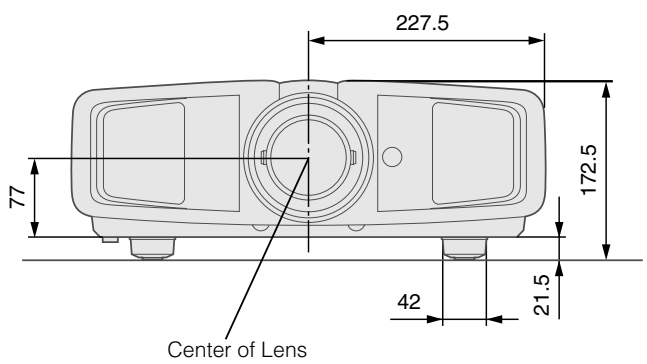
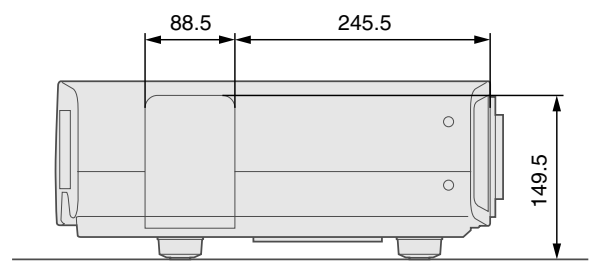
■ Left Side