myprojectorlamps.com

The most trusted, dependable name in projector lamp sales.

http://www.myprojectorlamps.com

http://www.myprojectorlamps.ca

http://www.myprojectorlamps.eu

The following projector manual has not been modified or altered in any way.

JVC®

D-ILA® MULTIMEDIA PROJECTOR

DLA-SX21U/DLA-SX21E
DLA-SX21SU/DLA-SX21SE

INSTRUCTIONS

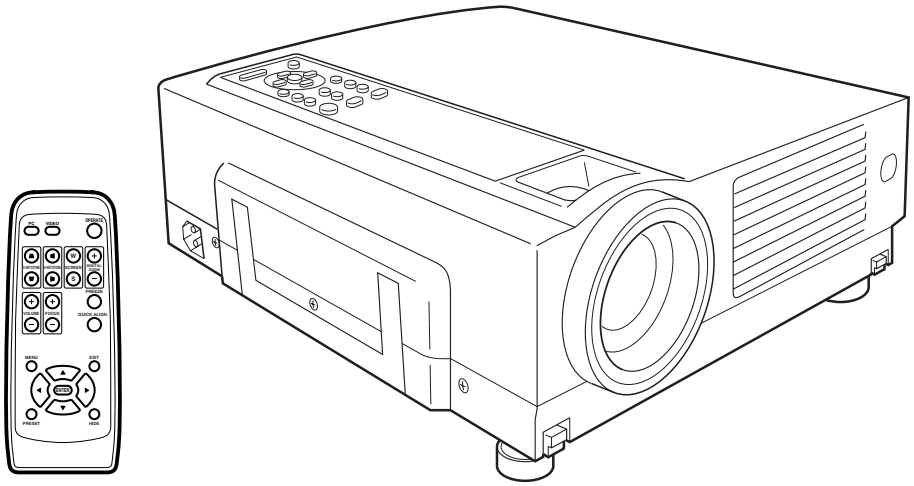

For customer Use:
Enter below the Serial No. which is located on the side panel of the cabinet. Retain this information for future reference.

Model No. DLA-SX21U/DLA-SX21SU

Serial No. _____

SAFETY PRECAUTIONS

IMPORTANT INFORMATION

NOTICE (For USA)

Language for Manuals of Products using HID Lamps (that contains mercury)

This product has a High Intensity Discharge (HID) lamp that contains a small amount of mercury. It also contains lead in some components.
Disposal of these materials may be regulated in your community due to environmental considerations. For disposal or recycling information please contact your local authorities, or the Electronics Industries Alliance: http://www.eiae.org.

WARNING :
TO PREVENT FIRE OR SHOCK HAZARDS, DO NOT EXPOSE THIS APPLIANCE TO RAIN OR MOISTURE.

WARNING :
THIS APPARATUS MUST BE EARTHED.

CAUTION :
To reduce the risk of electric shock, do not remove cover. Refer servicing to qualified service personnel.

This projector is equipped with a 3-blade grounding type plug to satisfy FCC rule. If you are unable to insert the plug into the outlet, contact your electrician.

FCC INFORMATION (U.S.A. only)

CAUTION:
Changes or modification not approved by JVC could void the user's authority to operate the equipment.

NOTE:
This equipment has been tested and found to comply with the limits for a Class B digital devices, pursuant to Part 15 of the FCC Rules. These limits are designed to provide reasonable protection against harmful interference in a residential installation. This equipment generates, uses, and can radiate radio frequency energy and, if not installed and used in accordance with the instructions, may cause harmful interference to radio communications. However, there is no guarantee that interference will not occur in a particular installation. If this equipment does cause harmful interference to radio or television reception, which can be determined by turning the equipment off and on, the user is encourage to try to correct the interference by one or more of the following measures:

- Reorient or relocate the receiving antenna.
- Increase the separation between the equipment and receiver.
- Connect the equipment into an outlet on a circuit different from that to which the receiver is connected.
- Consult the dealer or an experienced radio/TV technician for help.

MACHINE NOISE INFORMATION(Germany only)
Changes Machine Noise Information Ordinance 3.
GSGV, January 18, 1991: The sound pressure level at the operator position is equal or less than 70 dB(A) according to ISO 7779.

About burning-in of the D-ILA device
Do not allow the same still picture to be projected for a long time or an abnormally bright video picture to be projected.
Do not project video images with high-intensity or high contrast on a screen. The video image could be burnt into the D-ILA device.
Use special care when projecting video games or computer program images. There is no problem with ordinary video-cassette playback images.

About the installation place
Do not install the projector in a place that cannot support its weight securely.
If the installation place is not sturdy enough, the projector could fall or overturn, possibly causing personal injury.

IMPORTANT SAFEGUARDS

Electrical energy can perform many useful functions. This unit has been engineered and manufactured to assure your personal safety. But **IMPROPER USE CAN RESULT IN POTENTIAL ELECTRICAL SHOCK OR FIRE HAZARD**. In order not to defeat the safeguards incorporated into this product, observe the following basic rules for its installation,use and service. Please read these "Important Safeguards"carefully before use.

- All the safety and operating instructions should be read before the product is operated.
- The safety and operating instructions should be retained for future reference.
- All warnings on the product and in the operating instructions should be adhered to.
- All operating instructions should be followed.
- Place the projector near a wall outlet where the plug can be easily unplugged.
- Unplug this product from the wall outlet before cleaning. Do not use liquid cleaners or aerosol cleaners. Use a damp cloth for cleaning.
- Do not use attachments not recommended by the product manufacturer as they may be hazardous.
- Do not use this product near water. Do not use immediately after moving from a low temperature to high temperature, as this causes condensation, which may result in fire, electric shock, or other hazards.
- Do not place this product on an unstable cart, stand, or table. The product may fall, causing serious injury to a child or adult, and serious damage to the product. The product should be mounted according to the manufacturer's instructions, and should use a mount recommended by the manufacturer.
- When the product is used on a cart, care should be taken to avoid quick stops, excessive force, and uneven surfaces which may cause the product and cart to overturn, damaging equipment or causing possible injury to the operator.

PORTABLE CART WARNING
(symbol provided by RETAC)

S3126A

- Slots and openings in the cabinet are provided for ventilation. These ensure reliable operation of the product and protect it from overheating. These openings must not be blocked or covered. (The openings should never be blocked by placing the product on bed, sofa,rug, or similar surface. It should not be placed in a built-in installation such as a bookcase or rack unless proper ventilation is provided and the manufacturer's instructions have been adhered to.)
  For proper ventilation, separate the product from other equipment, which may prevent ventilation and keep a distance of more than 11-7/8" (30 cm).
- This product should be operated only with the type of power source indicated on the label. If you are not sure of the type of power supply to your home, consult your product dealer or local power company.
- This product is equipped with a three-wire plug. This plug will fit only into a grounded power outlet. If you are unable to insert the plug into the outlet, contact your electrician to install the proper outlet. Do not defeat the safety purpose of the grounded plug.
- Power-supply cords should be routed so that they are not likely to be walked on or pinched by items placed upon or against them. Pay particular attention to cords at doors, plugs, receptacles, and the point where they exit from the product.
- For added protection of this product during a lightning storm, or when it is left unattended and unused for long periods of time, unplug it from the wall outlet and disconnect the cable system. This will prevent damage to the product due to lightning and power line surges.
- Do not overload wall outlets, extension cords, or convenience receptacles on other equipment as this can result in a risk of fire or electric shock.
- Never push objects of any kind into this product through openings as they may touch dangerous voltage points or short out parts that could result in a fire or electric shock.
  Never spill liquid of any kind on the product.
- Do not attempt to service this product yourself as opening or removing covers may expose you to dangerous voltages and other hazards. Refer all service to qualified service personnel.
- Unplug this product from the wall outlet and refer service to qualified service personnel under the following conditions:
  a) When the power supply cord or plug is damaged.
  b) If liquid has been spilled, or objects have fallen on the product.
  c) If the product has been exposed to rain or water.
  d) If the product does not operate normally by following the operating instructions. Adjust only those controls that are covered by the Operation Manual, as an improper adjustment of controls may result in damage and will often require extensive work by a qualified technician to restore the product to normal operation.
  e) If the product has been dropped or damaged in any way.
  f) When the product exhibits a distinct change in performance - this indicates a need for service.
- When replacement parts are required, be sure the service technician has used replacement parts specified by the manufacturer or with same characteristics as the original part. Unauthorized substitutions may result in fire, electric shock, or other hazards.
- Upon completion of any service or repairs to this product, ask the service technician to perform safety checks to determine that the product is in proper operating condition.
- The product should be placed more than one foot away from heat sources such as radiators, heat registers, stoves, and other products (including amplifiers) that produce heat.
- When connecting other products such as VCR's, and personal computers, you should turn off the power of this product for protection against electric shock.
- Do not place combustibles behind the cooling fan. For example, cloth, paper, matches, aerosol cans or gas lighters that present special hazards when over heated.
- Do not look into the projection lens while the illumination lamp is turned on. Exposure of your eyes to the stronglight can result in impaired eyesight.
- Do not look into the inside of this unit through vents (ventilation holes), etc. Do not look at the illumination lamp directly by opening the cabinet while the illumination lamp is turned on. The illumination lamp also contains ultraviolet rays and the light is so powerful that your eyesight can be impaired.
- Do not drop, hit, or damage the light-source lamp (lamp unit) in any way. It may cause the light-source lamp to break and lead to injuries. Do not use a damaged light source lamp. If the light-source lamp is broken, ask your dealer to repair it. Fragments from a broken light-source lamp may cause injuries.
- The light-source lamp used in this projector is a high pressure mercury lamp. Be careful when disposing of the light-source lamp. If anything is unclear, please consult your dealer.
- Do not "ceiling-mount" the projector to a place which tends to vibrate; otherwise, the attaching fixture of the projector could be broken by the vibration, possibly causing it to fall or overturn, which could lead to personal injury.
- Use only the accessory cord designed for this product to prevent shock.
  The power supply voltage rating of this product is AC 120 V, AC 100 V– AC 240 V, the power cord attached conforms to the following power supply voltage. Use only the power cord designated by our dealer to ensure Safety and EMC.
  When it is used by other power supply voltage, power cable must be changed.
  Ensure that the power cable used for the projector is the correct type for the AC outlet in your country.
  Consult your product dealer.

Power cord

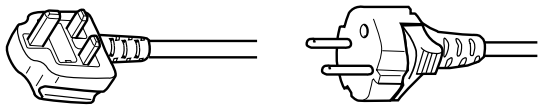

For United Kingdom

For European continent countries

Power cord

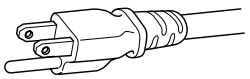

Power supply voltage: AC 120 V

***DO NOT allow any unqualified person to install the unit.**
Be sure to ask your dealer to install the unit (eg. attaching it to the ceiling) since special technical knowledge and skills are required for installation.
If installation is performed by an unqualified person, it may cause personal injury or electrical shock.

POWER CONNECTION

WARNING :
Do not cut off the main plug from this equipment.
If the plug fitted is not suitable for the power points in your home or the cable is too short to reach a power point, then obtain an appropriate safety approved extension lead or adapter or consult your dealer.
If nonetheless the mains plug is cut off, remove the fuse and dispose of the plug immediately, to avoid a possible shock hazard by inadvertent connection to the main supply.
If a new main plug has to be fitted, then follow the instruction given below:

WARNING :
THIS APPARATUS MUST BE EARTHED. IMPORTANT:
The wires in the mains lead on this product are coloured in accordance with the following cord:

Green-and-yellow : Earth
Blue : Neutral
Brown : Live

As these colours may not correspond with the coloured making identifying the terminals in your plug, proceed as follows:

The wire which is coloured green-and-yellow must be connected to the terminal which is marked with the letter E or the safety earth or coloured green or green-and-yellow.
The wire which is coloured blue must be connected to the terminal which is marked with the letter N or coloured black.
The wire which is coloured brown must be connected to the terminal which is marked with the letter L or coloured red.
When replacing the fuse, be sure to use only a correctly rated approved type, re-fit the fuse cover.
IF IN DOUBT —— CONSULT A COMPETENT ELECTRICIAN.
How To Replace The Fuse
Open the fuse compartment with the blade screwdriver, and replace the fuse.
(* An example is shown in the illustration below.)

POWER CONNECTION (United Kingdom only)

WARNING :
Do not cut off the main plug from this equipment.
If the plug fitted is not suitable for the power points in your home or the cable is too short to reach a power point, then obtain an appropriate safety approved extension lead or adapter or consult your dealer.

If nonetheless the mains plug is cut off, remove the fuse and dispose of the plug immediately, to avoid a possible shock hazard by inadvertent connection to the main supply.

If a new main plug has to be fitted, then follow the instruction given below:

WARNING :
THIS APPARATUS MUST BE EARTHED.

IMPORTANT:
The wires in the mains lead on this product are coloured in accordance with the following cord:

Green-and-yellow:	Earth
Blue:	Neutral
Brown:	Live

As these colours may not correspond with the coloured making identifying the terminals in your plug, proceed as follows:

The wire which is coloured green-and-yellow must be connected to the terminal which is marked ⏚ with the letter E or the safety earth or coloured green or green-and-yellow.

The wire which is coloured blue must be connected to the terminal which is marked with the letter N or coloured black.

The wire which is coloured brown must be connected to the terminal which is marked with the letter L or coloured red.
When replacing the fuse, be sure to use only a correctly rated approved type, re-fit the fuse cover.

IF IN DOUBT —— CONSULT A COMPETENT ELECTRICIAN.

How To Replace The Fuse
Open the fuse compartment with the blade screwdriver, and replace the fuse.
(* An example is shown in the illustration below.)

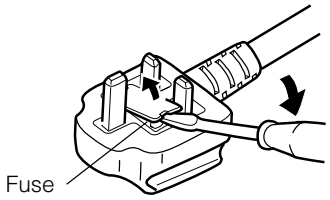

Caution

About burning-in of the D-ILA device

- **Do not allow the same still picture to be projected for a long time or an abnormally bright video picture to be projected.**
  Do not project video images with high-intensity or high contrast on a screen. The video image could be burnt into the D-ILA device.

  Use special care when projecting video games or computer program images.

  There is no problem with ordinary video cassette playback images.

Viewing conditions

- **Brightness of the room**
  Please avoid having sunshine or light shine directly onto the screen. Images can only be well projected if the room is dark.
- **Do not view the screen continually for a long time**
  Looking at the screen continually for a long time will cause your eyes to be tired. **Please rest your eyes sometimes.**
- **Image flicker due to installation condition or the environment**
  Please do not view flickering images for too long as this causes poor eyesight.

Care

- **Dirt in the cabinet**
  Please wipe the cabinet clean with a soft cloth. In case of heavy soiling, please wipe it with a damp cloth soaked with a neutral detergent.
- **Since the cabinet may in time, get damaged or deteriorate in condition, (eg. peeling paint):**
  - Do not wipe with a stiff cloth.
  - Do not wipe with force.
  - Do not wipe with thinner or benzene.
  - Do not spray chemicals like insecticide.
  - Do not allow it to come into contact with rubber or vinyl materials for an extended period of time.
- **Cleaning the lens**
  Please use lens-cleaning paper (for cleaning spectacles, cameras etc) sold in the market for cleaning.

  Please do not use liquid-type cleansers as it may cause the coating mask on the surface to peel off.

  Please do not knock the surface of the lens as it damages easily.

Using the screen mode switch function

- This projector is equipped with a screen mode switch function that sets the screen size (aspect ratio and resize). If the setted screen aspect ratio and size differs from that of the inputted images (eg images from TV programs), the projected image screen will differ from the original. Please bear this in mind when you choose the screen mode.
- Please keep in mind that making use of the screen mode switch function to alter screen images(aspect ratio and resize) in restaurants/ hotels etc, for public viewing, in the pursuit of profit may constitute an infringement of the Copyright Act.

Contents

SAFETY PRECAUTIONS 2
Caution 5
Accessories 6
Controls and Features 7
Front Side / Top Surface / Left Side 7
Rear Side / Right Side / Bottom Surface 8
Connector Panel 9
Control Panel on the Projector 10
Indicator Display on the Control Panel 10
Remote Control Unit 12
Loading Batteries into the Remote Control 14
Installing the Projector 15
Precautions for Installation 15
Installing the Projector against the Screen 16
Mounting the Projector 16
Projection Distance and Screen Size 17
Effective Range and Distance of the Remote Control Unit 18
Connecting to Various Devices 19
Signals that can be input into the Projector 19
Connecting to Devices 21
Connecting the Power Cord (supplied) 24
Basic Operations 25
Basic Operation Procedures 25
1. Power On 25
2. Selecting the image to be projected 25
3. Adjusting the Zoom Ring (the screen size) 26
4. Adjusting the Focus Ring(Focus) 26
5. Adjusting the Sound Volume 27
Power Off 27
Frequently used Convenient Functions 28
Enlarging the Image 28
Turning Off Image and Sound 29
Displaying a Still Picture 29
Removing the Trapezoidal Distortion of the Image 30
Using the Quick Alignment function 31
Selecting the Screen Size 31
Adjustments and Settings Using Menus 32
The Menu Structure 32
The Menu Operation Buttons 35
The Procedure for Menu Operation 36
The Menu Configuration 37
1 Image adj. menu 37
2 Color temp. menu 37
3 Set up menu 37
4 Position menu 38
5 Decoder menu 38
6 Logo menu 38
7 Capture menu 38
8 Capture start 39
9 Option menu (11) 39
10 Color profile menu 39
12 Language menu 39
13 Information menu 40
Editing and Projecting Logo 41
Replacing the Lamp 43
The light source lamp and its lamp time 43
The procedure for lamp replacement 43
Resetting the lamp time 45
Cleaning and Replacing the Filter 46
Troubleshooting 47
What to do when these messages are displayed .. 49
Warning Indication 51
Specifications 52
Dimensions 53
Pin arrangement 54

Accessories

The following accessories are packed together with this projector.
Please confirm all items. If any item is missing, please contact your dealer.

Quick Guide	x 1 book
Instructions (CD-ROM)	x 1 set
Guarantee	x 1 book
Power Cord (approximately 2.5m)	x 1 pc
Remote Control (RM-MSX21)	x 1 pc
[AA/R6-size] Battery (for operation confirmation)	x 2 pcs
Computer Cable (approximately 2m: D-sub3 row 15 pin)	x 1 pc
AV connection cable (approximately 2m: RCA Pin Plug)	x 1 pc

■ Optional Accessories

❊ Please ask your authorized dealer for the details.

- **Replacement lamp (lamp unit) BHL5006-S**
- **Replacement filter**
  Inner filter : LC32058-001
  Lower filter : LC32087-001

Controls and Features

Front Side/Top Surface/Left Side

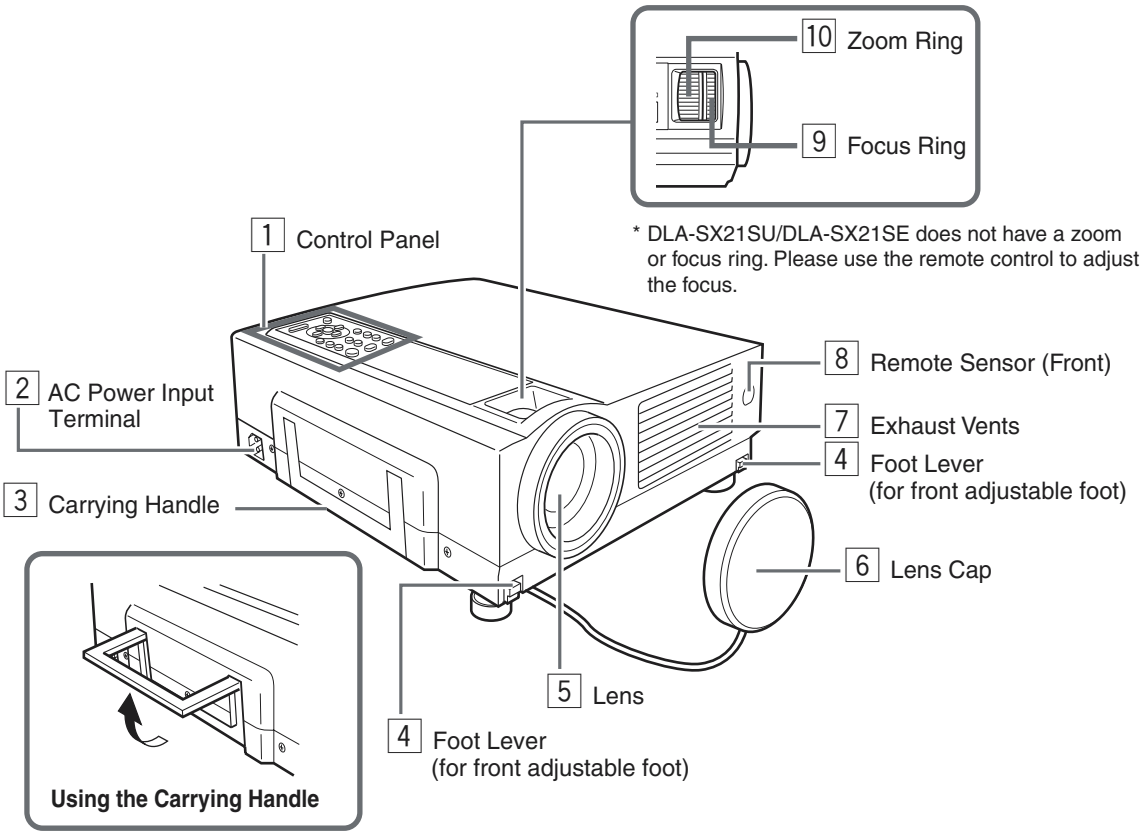

1 Control Panel
For details, See 'Control Panel on the Projector'.
(☞ page 10, 11)

2 AC Power Input Terminal
This is where the supplied power cord is connected to.
(☞ page 24)

3 Carrying Handle
Use this handle when carrying the projector.

4 Foot Lever (for front adjustable foot)
Use when extending and retracting the front foot.
(☞ page 15)

5 Lens
The lens is a 1.3 x manual zoom lens.
DLA-SX21SU/DLA-SX21SE uses 1:1 fixed lens.
Before projection, remove the lens cap. (☞ page 17, 24)

6 Lens Cap
It is recommended that the cap be fitted on the lens to prevent it from becoming dirty when the projector is not in use.
(☞ page 24)

7 Air inlets (on the front, right, and bottom side of projector)
The air inlets absorb air to cool the internal components of the projector. Do not block or allow warm air to blow into them as it may cause damage.
* The air inlet filter on the right side cannot be removed. Please clean the filter regularly with eg, a vacuum cleaner.

8 Remote Sensor (Front)
When operating with the remote control, aim it towards this sensor. (☞ page 18)
* A remote sensor is also provided at the rear of the projector.

9 Focus Ring
Used to manually focus the projected image on the screen.
DLA-SX21SU/DLA-SX21SE does not have a focus ring.
(☞ page 26)

10 Zoom Ring
Used to manually zoom the projected image on the screen.
DLA-SX21SU/DLA-SX21SE does not have a zoom ring.
(☞ page 26)

Rear Side/ Right Side/Bottom Surface

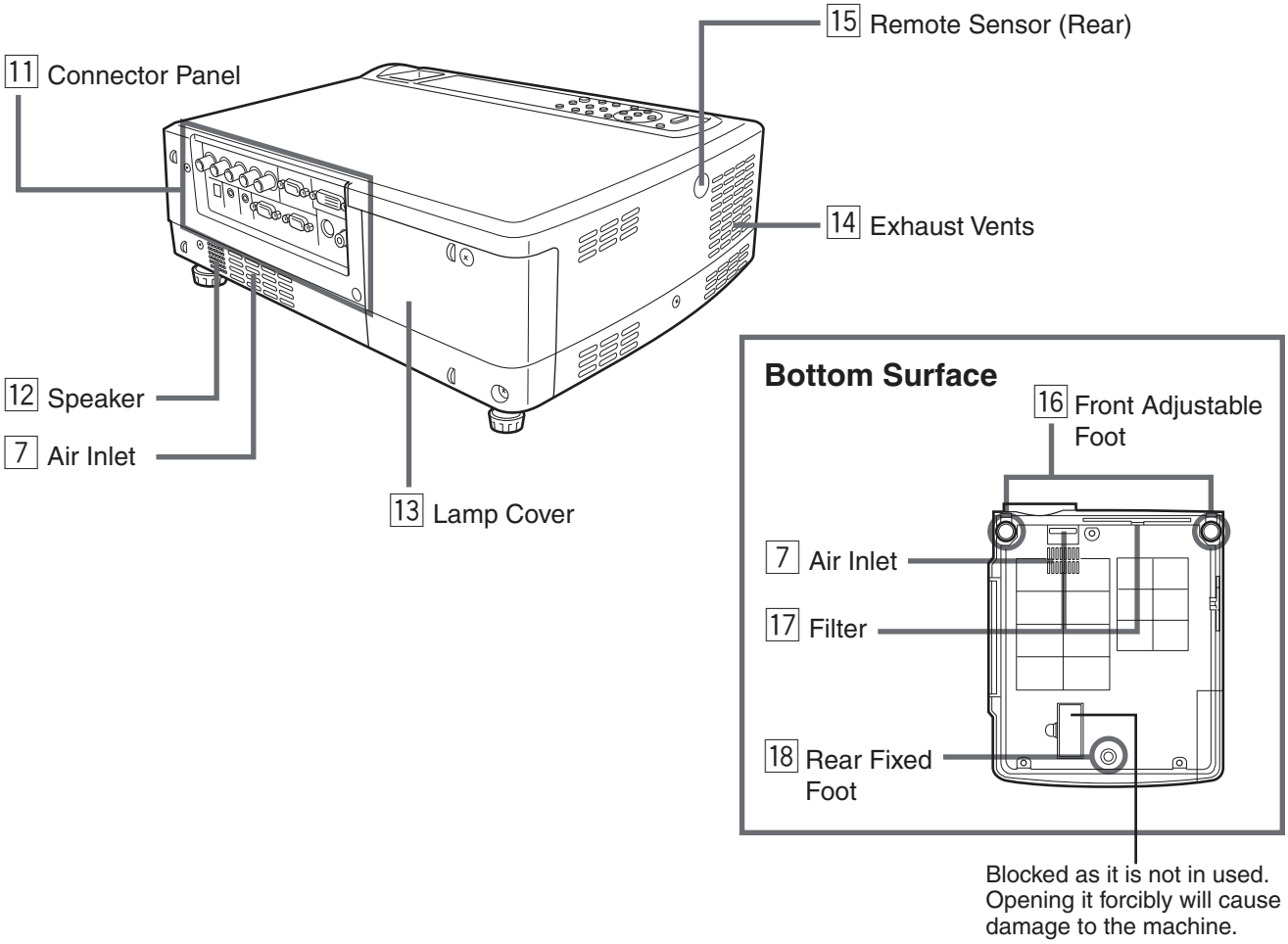

11 Connector Panel
For details, refer to 'Connector Panel' . (☞ page 9)

12 Speaker
Built-in speaker located here.

13 Lamp Cover
Remove this cover when replacing the lamps. (☞ page 43)

14 Exhaust Vents
Warm air is expelled through these vents to keep the system cool. Please do not block the exhaust vents.

15 Remote Sensor (Rear)
When operating with the remote control, aim it towards this sensor. (☞ page 18)
* A remote sensor is also provided at the front of the projector.

16 Front Adjustable Foot (for adjusting the height and angle)
It is set at the lowest position when shipped from the factory. The foot can be adjusted to a maximum angle of +6° and a maximum length of 31mm. (☞ page 15)

17 Filter
Cleans air drawn in from the air inlet. Please clean the filter regularly with eg, a vacuum cleaner. (☞ page 46)

18 Rear Fixed Foot

Connector Panel

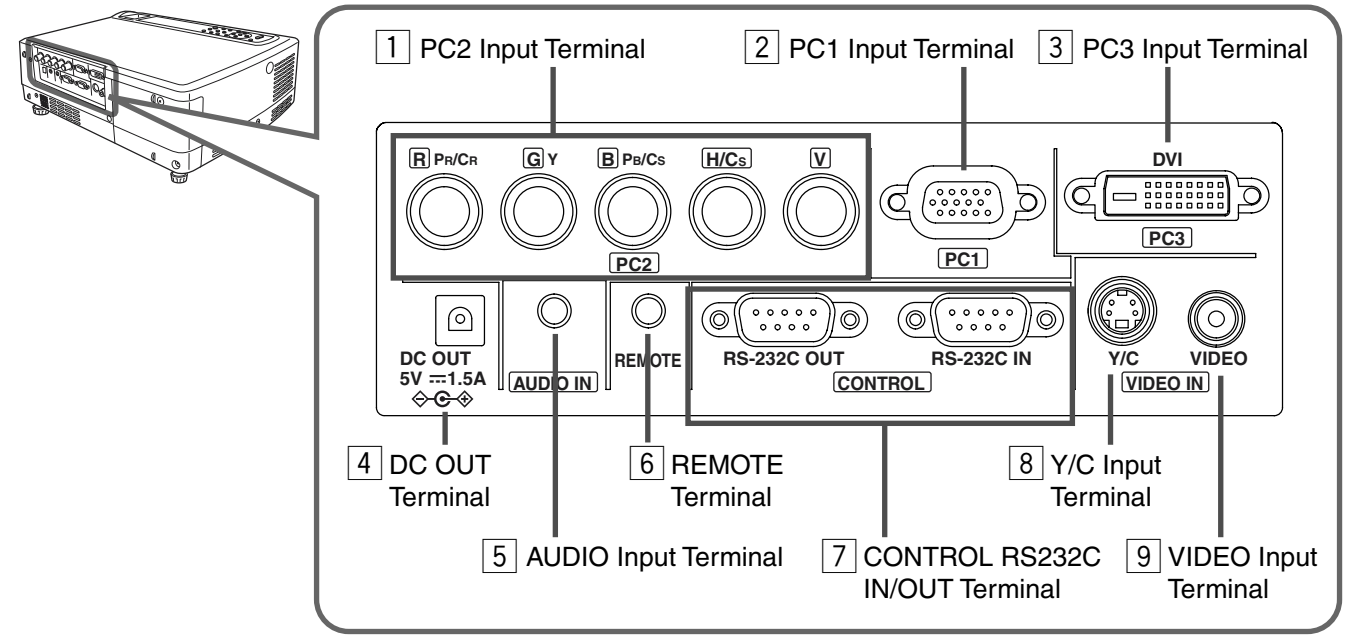

1 PC 2 Input terminal [BNC x 5]

These are multipurpose video input terminals that allow input of the following signals: analog RGB signals, vertical sync (V) signals, and horizontal sync (H) signals /composite signals (Cs). Devices which have analog RGB signal output terminals can be connected. This terminal can also be used as an input terminal for component signals (Y,CB,CR) or DTV-format (Y, PB,PR) signals. Devices which have component signals output terminals can be connected. (☞ page 22)

To use this terminal, the "PC2 (BNC)" item in the "Options" menu must be set correctly according to the input signals. (☞ page 39)

* Input of external sync signals is automatically detected. Detection of H/V signals or Cs signals causes automatic switching to external sync. The priority order is H/V>Cs.
* When computer-related signals are input, the uppermost edge of the image may appear to bow if the sync signal input is composite sync (Cs) or G on sync signal. In this case, please use separate sync signals for vertical sync (V) and horizontal sync (H).

2 PC 1 input terminal (D-sub 3 rows 15 pin)

This is an input terminal dedicated to computer signals (RGB Video signals and sync signals).

Connect the display output terminal of the computer to this terminal. When a Macintosh computer is to be connected, please use the conversion adapter (sold separately) for Mac. (☞ page 22)

* When computer signals are input, the uppermost edge of the image may appear to bow if the sync signal input is composite sync signals or G on sync signals.

3 PC 3 input terminal [DVI-D (Dual/ Single) 24 Pin]

This is an input terminal dedicated to computer signals (DVI-D Terminal Dual/ Single). Connect the display output terminal of the computer to this terminal.

4 DC OUT Terminal

This is the DC 5V, 1.5A power source output terminal. **Please do not use optional devices other than those specified.**

5 AUDIO (audio) input terminal [mini jack]

This is the audio input terminal for devices connected to PC1, PC2, PC3, Video or Y/C. Connect the audio output terminal of the device to this terminal. (☞ page 21, 22)

* When PC 1, PC 2, PC3, Video or Y/C input is being selected, the inputted audio signals will be reproduced by the projector speaker.
  (Audio output for this projector is monoaural.)

6 REMOTE terminal (stereo mini jack)

When the remote control is unable to work due to rear projection etc., the REMOTE terminal can be used to connect an external sensor to the projector. The external sensor is not sold. Please check with your authorized dealer.

7 CONTROL RS232C IN/OUT Terminal [D-sub 9 Pin]

This is the RS-232C interface-specific terminal. The projector can be controlled by a computer connected externally. More than one computers can be controlled using both the RS-232C IN and OUT terminals. (☞ page 23)

* For details, please check with your dealer.

8 Y/C Input Terminal [Mini DIN 4 PIN]

This is the input terminal for Y/C (S-Video) signals. Connect this terminal to the S-video output terminal of a video deck, etc. (☞ page 21)

9 VIDEO Input Terminal [RCA pin jack]

This is an input terminal for composite video signals. Connect this terminal to the composite video output terminal of a VCR, etc. (☞ page 21)

Control Panel on the Projector

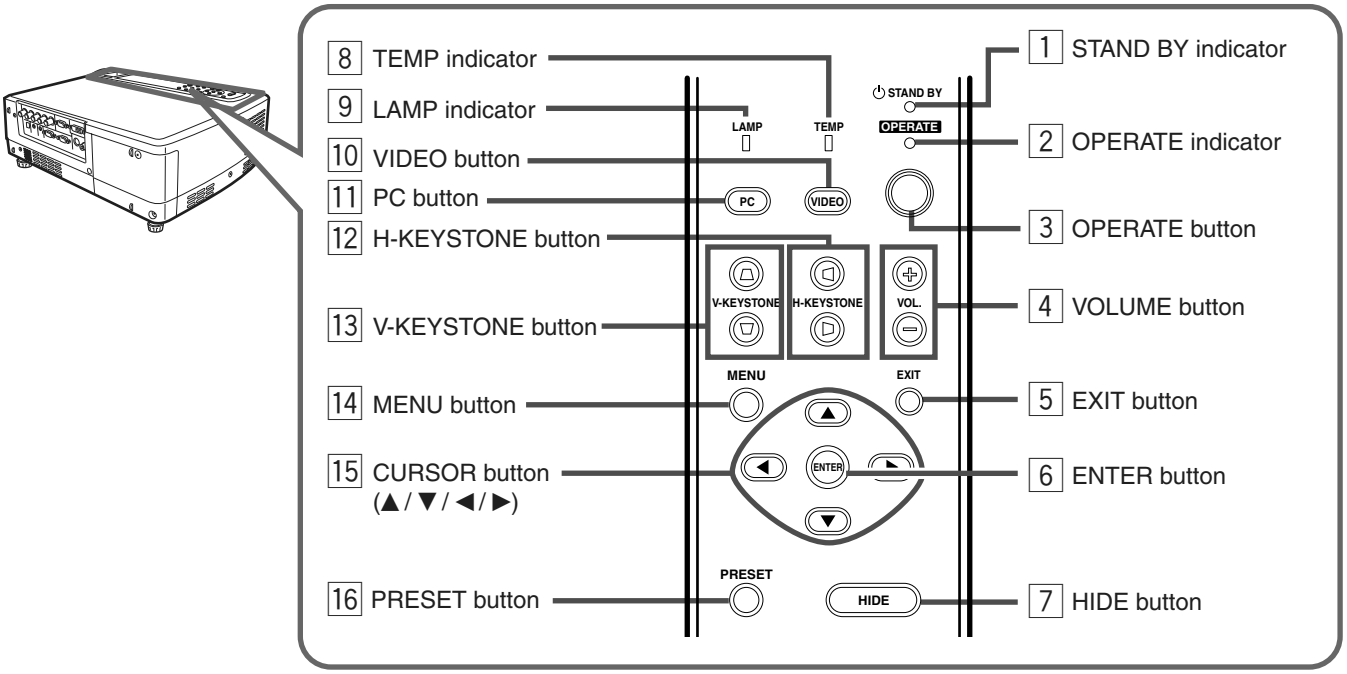

Indicator Display on the Control Panel

Indicators appear on the Control Panel to indicate the stand-by, operate or cool down mode as well as other operations in running. For explanations on warning indication for *1,*2:

*1 : ☞ page 43

*2 : ☞ page 51

STAND BY light on

On stand by mode

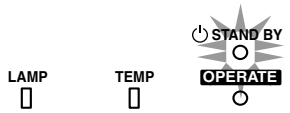

OPERATE light on

On operate mode
(In operation/ during projection)

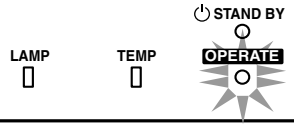

STAND BY blinking

On cool down mode (when cooling lamp)

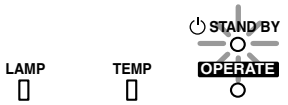

LAMP blinking*1

When the lamp expired
(Lamp time over 2000hours)

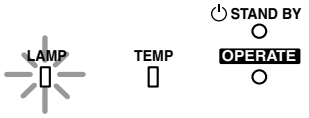

LAMP light on*1

When time to replace lamp is near
(Lamp time over 1900hours)

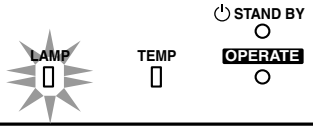

LAMP and STAND BY blinking*2

When lamp does not light up and unable to project

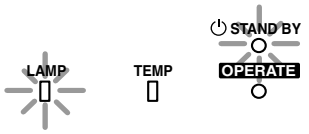

LAMP and OPERATE blinking simultaneously*2

Lamp turned off during projection

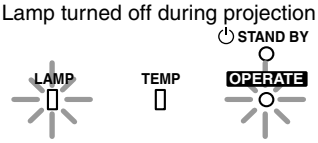

LAMP and TEMP blinking*2

When circuit does not function properly
(Abnormal circuit functioning)

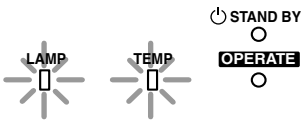

LAMP and OPERATE blinking alternately*2

When lamp is removed

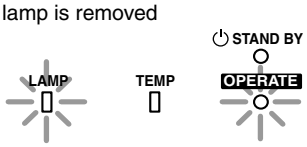

TEMP blinking*2

When internal temperature is abnormally high
(Abnormal internal temperature)

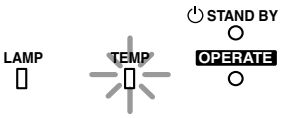

TEMP and STAND BY blinking*2

When temperature at exhaust vents is high
(Abnormal external temperature)

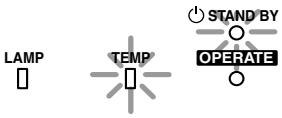

All blinking*2

When inner fan stops (fan lock)

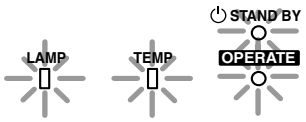

Control Panel on the Projector

1 STAND BY Indicator

Light on : on stand by mode.
Blinking : on cool down mode.

2 OPERATE Indicator

Light on : During projection.

3 OPERATE button

When this projector is in the standby mode, pressing this button for more than 1 second will turn on the projector and cause the OPERATE indicator to light up. Press it one second or more again, and the projector goes into the cool down mode and finally the stand by mode. (☞ page 25)

* The OPERATE button will not work within approximately 1 minute of the light-source lamp being turned on. Hence wait about 1 minute before pressing.

4 VOLUME ⊕ / ⊖ buttons

Use these buttons to adjust the sound volume.
(☞ page 27)

5 EXIT button

Press this button to display the previous menu. (For example, from sub menu to main menu). Also, pressing this button when the main menu is displayed will erase the menu. (☞ page 35)

6 ENTER button

Press this button to show the next menu (For example, from main menu to sub-menu). It is also used when "ENTER" is displayed against the item on the menu screen, or to choose the "Reset" option etc. (☞ page 35)

7 HIDE button

Use this button to turn off the image on the screen and audio sound temporarily. Pressing it again causes the image and audio sound to resume. (☞ page 29)

8 TEMP Indicator

Blinking : When temperature inside the projector is abnormally high.

9 LAMP Indicator

Light on : When the lamp has been used for more than 1900 hours.
Blinking : When the lamp has been used for more than 2000 hours.
Please change the lamp (☞ page 10, 43, 51)

10 VIDEO button

Use this button to select a device such as a video connected to the VIDEO IN terminal (VIDEO or Y/C Input terminal) of the projector. (☞ page 25)

11 PC button

Use this button to select a device connected to the PC 1, PC 2 or PC 3 terminals. (☞ page 26)

12 H-KEYSTONE button

Use this button to remove the horizontal trapezoidal distortion of the image projected on the screen. (☞ page 30)

13 V-KEYSTONE button

Use this button to remove the vertical trapezoidal distortion of the image projected on the screen. (☞ page 30)

14 MENU button

Use this button to enter or exit the menu mode. When the main menu is displayed, pressing this button will cause the menu to disappear. (☞ page 35)

15 CURSOR (▲/ ▼ / ◀ / ▶) buttons

These buttons are used in the menu mode to select an item and to set or adjust the value in the sub-menu. (☞ page 35)

16 PRESET button

This PRESET button works as a reset button for the [VOLUME] [V-KEYSTONE] [H-KEYSTONE] adjustments done on the control panel and remote control and the [DIGITAL ZOOM] and [SCREEN Ⓦ] adjustments done on the remote control. (☞ page 28, 30)
When adjusting the volume, keystone or digital zoom (when the setting is displayed) the adjusted value is reset to that which was set when the projector was shipped from the factory. This button does not work for the items in the menu (submenu). (☞ page 35)

About Cool Down mode

Cool down mode is when the heated lamp cools down for about 90s after projection. This function is to prevent heat from the heated lamp from causing damages and deformations to the internal components of the projector. It also prevents lamp breakage and shortened lamp life.
The Cool down mode is indicated by the blinking STAND BY indicator. When in the cool down mode, pressing the OPERATE button will not turn on the projector.
After the cool down process is completed, it will change to the stand by mode automatically.

Note

Please do not pull out the plug from the power outlet when in the cool down mode. Please also do not block the exhaust vents by standing the projector or laying it on its sides.

Remote Control Unit

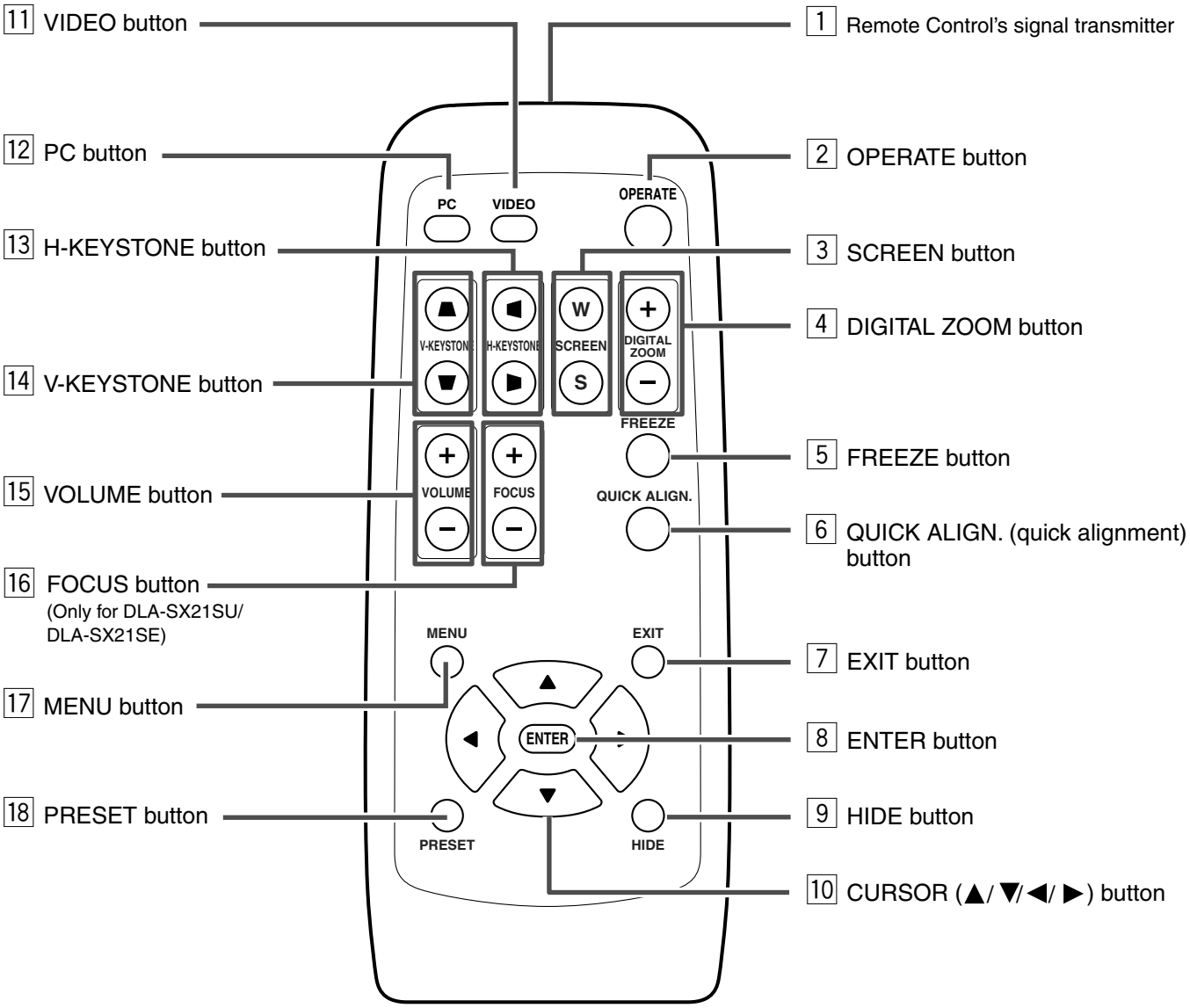

1 Remote Control's signal transmitter
(☞ page 18)

2 OPERATE button
When the projector is in the standby mode, pressing this button for one second or more will turn on the projector and light up the OPERATE indicator. Press it one second or more again and the projector will turn off, cool down and finally enter the standby mode.(☞ page 25)
* The OPERATE button will not work for approximately 1 minute from when the light-source lamp is turned on. Use the button after approximately 1 minute.

3 SCREEN button
Each time you press this button, the selection alternates between wide screen size (16:9) and standard screen size (4:3). (☞ page 31)

4 DIGITAL ZOOM ⊕ / ⊖ buttons
This digital zoom function can magnify the image up to four times on the screen. (☞ page 28)
* There will however be some inevitable loss of image quality when images are enlarged.

5 FREEZE button
This button allows the image to be retained in the projector memory and stills the picture on the screen. Press the button once to freeze the picture and again to de-freeze. (☞ page 29)

6 QUICK ALIGN. (quick alignment) button
Use this button to automatically adjust the projected image's (i)horizontal and vertical position, (ii) Width and display area, etc. During alignment, the message "QUICK ALIGN." appears on the screen and disappears when alignment is complete. (☞ page 31)
* The 'Quick Alignment' function only works when the signal is input from either the PC 1 or PC 2 terminal. It does not work when the signal is input from the VIDEO IN terminal or the Y/C input terminal.

7 EXIT button
Press this button to display the previous hierarchical menu (For example, from sub-menu to main menu). When the main menu is displayed, pressing this button will cause the menu to disappear. (☞ page 35)

8 ENTER button
Press this button to show the next hierarchical menu (For example, from main menu to sub menu). It is also used when "ENTER" is displayed against the item on the menu screen or to select the "Reset" menu. (☞ page 35)

9 HIDE button
Use this button to turn off the image on the screen and audio sound temporarily. Pressing it again causes the image and audio sound to resume. (☞ page 29)

10 CURSOR (▲/ ▼ / ◀ / ▶) buttons
These buttons are used in the menu mode to select an item, adjust the value etc. (☞ page 35)

11 VIDEO button
Use this button to select a device such as a video connected to the VIDEO IN terminal (VIDEO or Y/C Input terminal) of the projector. (☞ page 25)

12 PC button
Use this button to select a device connected to the PC 1, PC 2 or PC 3 terminal. (☞ page 26)

13 H-KEYSTONE button
Use this button to remove the horizontal trapezoidal distortion of the image projected on the screen. (☞ page 30)

14 V-KEYSTONE button
Use this button to remove the vertical trapezoidal distortion of the image projected on the screen. (☞ page 30)

15 VOLUME ⊕ / ⊖ button
Use these buttons to adjust the sound volume.
(☞ page 27)

16 FOCUS button*
Use this button to adjust the focus of the projected image.
(☞ page 26)
* Only for DLA-SX21SU/DLA-SX21SE.

17 MENU button
Use this button to enter or exit the menu mode. When the main menu is displayed, press this button and it will disappear. (☞ page 35)

18 PRESET button
This PRESET button only works as a reset button for the [VOLUME], [V-KEYSTONE] and [H-KEYSTONE] adjustments done on the control panel and the [VOLUME], [DIGITAL ZOOM] and [SCREEN ⓦ] adjustments done on the remote control. (☞ page 28, 30)
When adjusting the volume, keystone or digital zoom (when the setting is displayed on the screen) the adjusted value is reset to that which was set when the projector was shipped from the factory. This button does not work for the menu (submenu) items. (☞ page 35)

Loading Batteries into the Remote Control

Please load batteries into the remote control. Once the remote control starts to work erratically, replace the batteries.

1. Open the back cover

Push the hook on the back cover lightly in the direction of the arrow and lift it up.

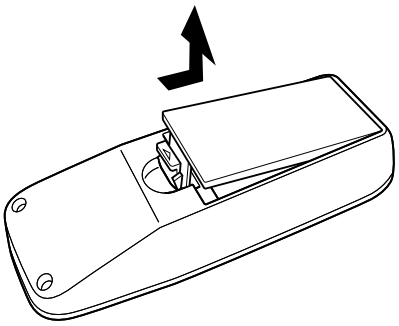

2. Load the batteries

Place the two supplied batteries (AA/R6-size) into the remote control as illustrated below. To prevent short circuit, be sure to insert the minus ⊖ end of the battery first.

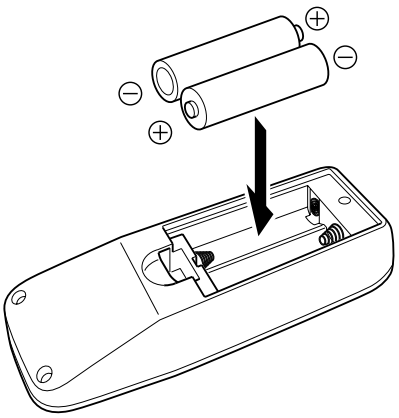

3. Close the back cover

Close the back cover by inserting the end first and pressing down until a click is heard.

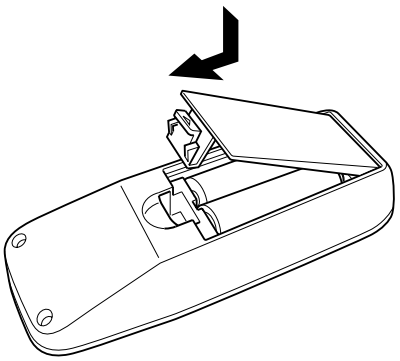

Precautions for using batteries

If batteries are used incorrectly, they may crack or leak. This could cause fire, burn, malfunction, staining or damaging of the surroundings.

Beware of the following:

- Do not mix new and old batteries.
- Do not mix different types of batteries as they are different in characteristics.
- Place batteries so they match the polarities indicated on the cartridge.
- Be sure to insert the minus ⊖ end in first to avoid short-circuiting.
- Do not put batteries into a fire or try to recharge them.
- Use only designated batteries.
- Remove the batteries if the remote control is not to be used for a prolonged period.

Battery Life

Batteries run for six months to one year in normal use. However, the batteries supplied are for confirming operation and may not run that long. When the remote control starts failing to work properly, replace the batteries with new ones.

Battery Leakage

When the batteries are totally exhausted and can no longer be used, replace them immediately.
Leaving the batteries in the battery compartment causes battery leakage which in turn causes malfunction.
Further, in cases where the leakage comes to contact with the skin, wipe it away with a cloth, otherwise skin problems may occur.

Installing the Projector

Precautions for Installation

Please read the following properly when installing the projector.

Installation Environment

Please do not install or use this projector in the following places as it is a precision device. This could cause fire or a malfunction.

- Where there is water, humidity or dust.
- Where the projector may be subjected to oil, smoke or cigarette smoke.
- On a soft surface such as a carpet or cushion
- Where the projector may be subjected to direct sunlight.
- Where temperature is high or low.
  Allowable operation temperature range : +5˚C to +35˚C
  Allowable relative humidity range : 20% to 80% (no condensation)
  Allowable storage temperature range : –10˚C to +60˚C
- Any room in which there is smoke and grease.
  Even where smoke and grease level is minimal, prolonged exposure would affect the projector. The projector emits heat and cools the optical components down by taking in large amount of air. When the optical path is soiled by grease/dirt, images become dark and color projection deteriorates, such often being the cause of damage. Removing grease/dirt totally from the optical parts is not possible.

Precaution for Usage

This projector uses a light-source lamp which becomes high in temperature when projecting.
Please DO NOT use it in the following ways as it may result in fire or malfunction.

- Lay the projector on its side when projecting.
- Project outside the specified angle.
  Do not use the projector while it is set more than ±5˚ horizontally (left/right), or more than ±25˚ vertically (up/down). This could cause color variation or shorten the lamp life.
- Block the exhaust vents.

Minimum Space Required

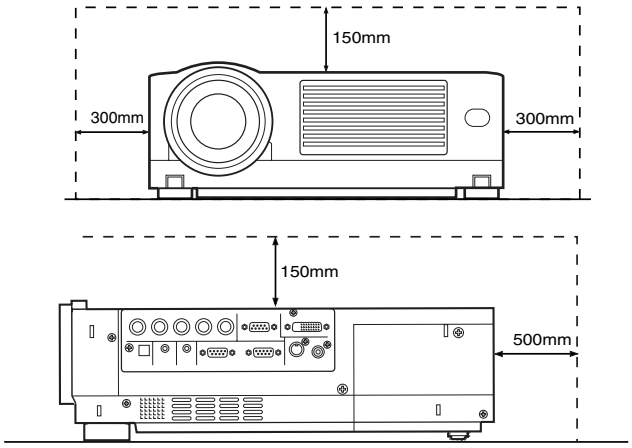

Do not use a cover which may enclose the projector air-tight or block the exhaust vents. Allow sufficient space around the projector. When the projector is enclosed in a space of the following dimensions, use an air conditioner so that internal and external temperatures are the same.

Adjusting the Inclination of the Projector

The vertical angle and leveling of the projector can be adjusted with the adjustable feet at the bottom of the projector.

■ Vertical angle adjustment range

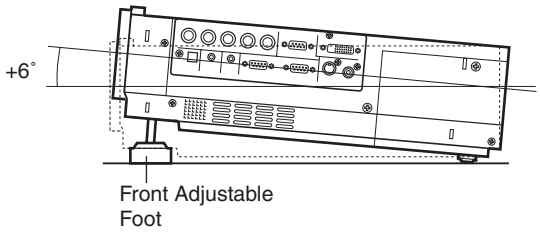

Adjusting the vertical angle of the projector

While pushing the lever upward, raise the projector. The maximum extension is approximately 31mm. To retract the foot, push the lever and lower the projector slowly; the projector is fixed at the position where you release the lever.

Adjusting the level of the projector

Lift the projector, rotate the front adjustable foot, and adjust the horizontal angle until the projector is level.

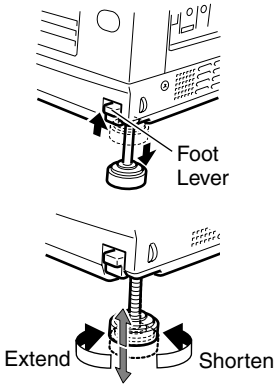

Installing the Projector against the Screen

The projector should be placed so that the center line of the lens is at a right angle to the screen as in the following figures.

■ Side View

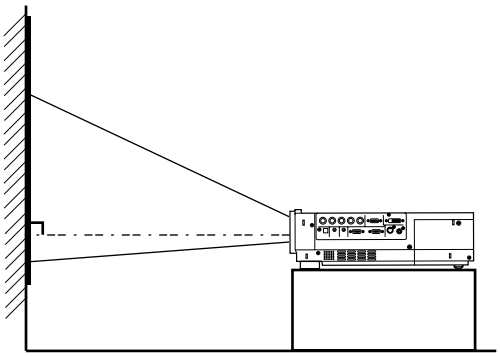

■ Top View

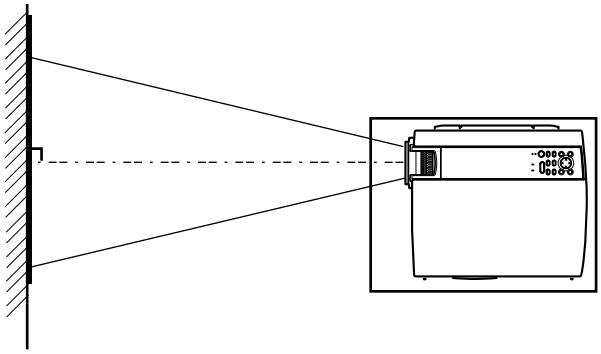

- Trapezoidal-distortion can be corrected using the KEYSTONE button on the projector. (☞ page 30)

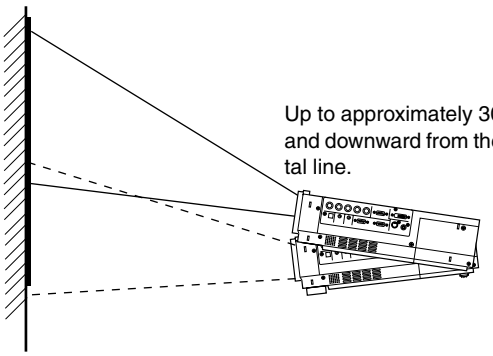

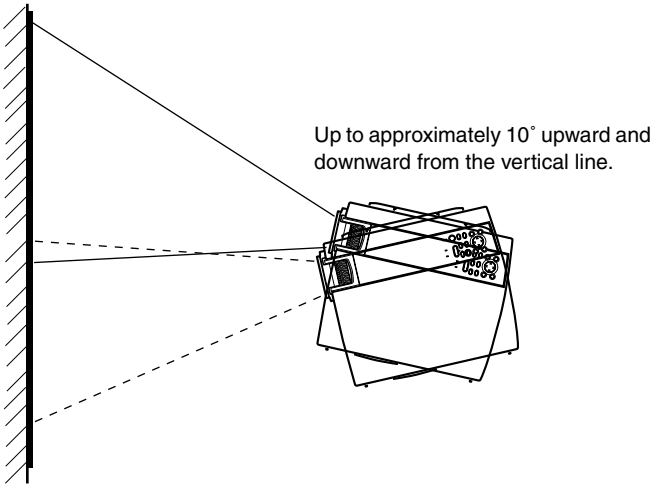

Mounting the Projector

When mounting of the projector is required, do it using the embedded three screw holes (M6 nuts) at the bottom of the projector.

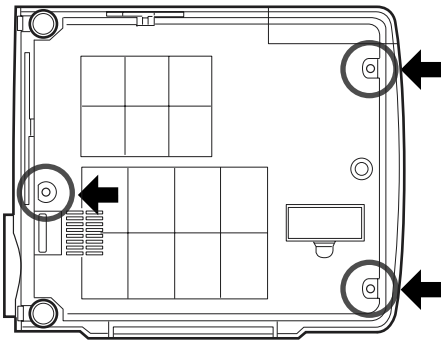

Precaution for ceiling-mount

- To ceiling-mount and adjust the projector, special expertise and techniques are necessary. Be sure to ask your dealer or specialist to perform the work.
- Do not mount on places that will be subjected to knocks and vibrations.
- As the depth of the screw holes is 10mm, use screws shorter than 10mm but longer than 6mm. Otherwise, the screws will damage the internal parts of the projector causing malfunction.

Projection Distance and Screen Size

- This projector uses 1.3x manual zoom lens for projection.
- The range of projection for good focus is approximately 1.6m to approximately 12m when the aspect ratio of the screen is 4:3. Install the projector within this range.
- If the KEYSTONE is adjusted, the screen becomes smaller. (☞ page 30)

■ Screen installation

4:3 and 16:9 Screen

16:9 aspect-ratio picture is projected based on the width of the range in which a 4:3 aspect-ratio picture is projected. The diagonal length of a 16:9 aspect-ratio screen is about 91.8% that of a 4:3 aspect-ratio screen.

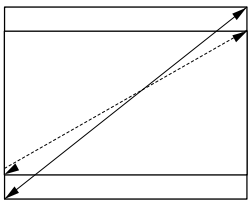

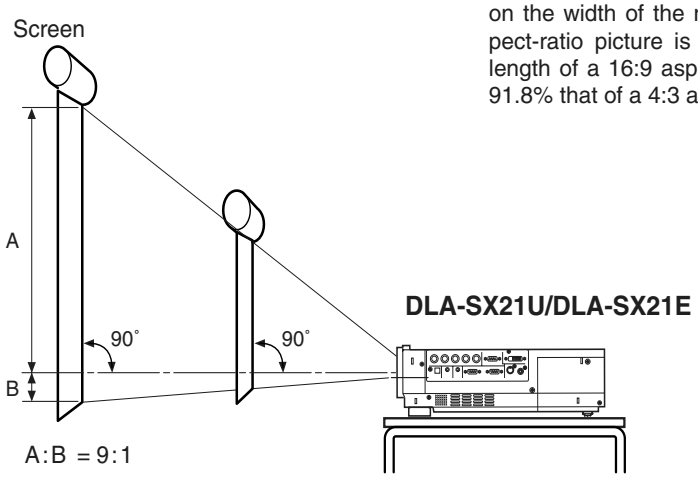

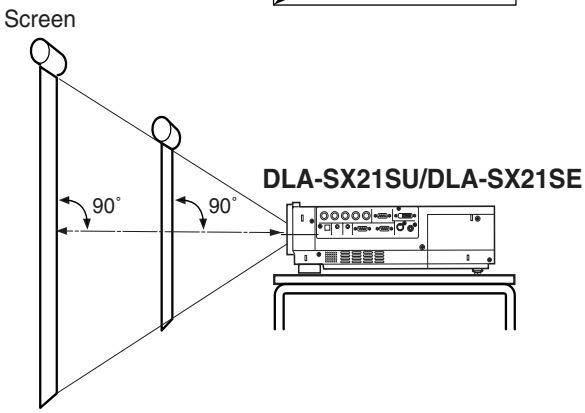

■ Relationship between projection distance and projection screen size

For DLA-SX21U/DLA-SX21E

Projection screen size of 4:3 aspect Ratio (Diagonal length)	Approximate projecting distance W(Wide) ~ T(Tele-)
Model 40 (approx. 106.7cm)	(approx.1.56m) ~ (approx. 2.05m)
Model 60 (approx. 152.4cm)	(approx. 2.37m) ~ (approx. 3.10m)
Model 80 (approx. 203.2cm)	(approx. 3.18m) ~ (approx. 4.15m)
Model 100 (approx. 254.0cm)	(approx. 3.99m) ~ (approx. 5.20m)
Model 120 (approx. 304.8cm)	(approx. 4.80m) ~ (approx. 6.25m)
Model 140 (approx. 355.6cm)	(approx. 5.61m) ~ (approx. 7.31m)
Model 160 (approx. 406.4cm)	(approx. 6.42m) ~ (approx. 8.36m)
Model 180 (approx. 457.2cm)	(approx. 7.22m) ~ (approx. 9.41m)
Model 200 (approx. 508.0cm)	(approx. 8.03m) ~ (approx. 10.46m)
Model 220 (approx. 558.8cm)	(approx. 8.84m) ~ (approx. 11.51m)
Model 240 (approx. 609.6cm)	(approx. 9.65m) ~
Model 260 (approx. 660.4cm)	(approx. 10.46m) ~
Model 280 (approx. 711.2cm)	(approx. 11.27m) ~
Model 300 (approx. 762.0cm)	(approx. 12.08m) ~

For DLA-SX21SU/DLA-SX21SE

Projection screen size of 4:3 aspect Ratio (Diagonal length)	Approximate projecting distance
Model 40 (approx. 101.6cm)	(approx. 0.774m)
Model 45 (approx. 114.3cm)	(approx. 0.875m)
Model 50 (approx. 127.0cm)	(approx. 0.977m)
Model 55 (approx. 139.7cm)	(approx. 1.078m)
Model 60 (approx. 152.4cm)	(approx. 1.180m)
Model 65 (approx. 165.1cm)	(approx. 1.281m)
Model 70 (approx. 177.8cm)	(approx. 1.383m)
Model 75 (approx. 190.5cm)	(approx. 1.484m)
Model 80 (approx. 203.2cm)	(approx. 1.586m)
Model 85 (approx. 215.9cm)	(approx. 1.687m)
Model 90 (approx. 228.6cm)	(approx. 1.789m)
Model 95 (approx. 241.3cm)	(approx. 1.890m)
Model 100 (approx. 254cm)	(approx. 1.992m)

* The projection screen size and projecting distance in the table above are provided only as a guide (reference). Please use it when installing. The projected image size may vary depending on the manufacturing tolerance of the projection lens. Please use the 'Wide' side for sizes bigger than Model 220. The guaranteed projection distance range is from 2m to 10m.

Effective Range and Distance of the Remote Control Unit

The operable distance of the remote control unit is about 7m for direct reception. The remote control unit can be used by having the transmission signals reflected by the screen. In this case, please set **the total distance (distance between projector and screen, A and distance between remote control, B) of "A + B" within 7m.** The operable angles of the remote control unit are 30˚ right and left, and 20˚ up and down.

■ Using as a wireless remote control unit

As the effect of signals reflected from the remote control unit differ with the type of screen used, effective range and distance may decrease.

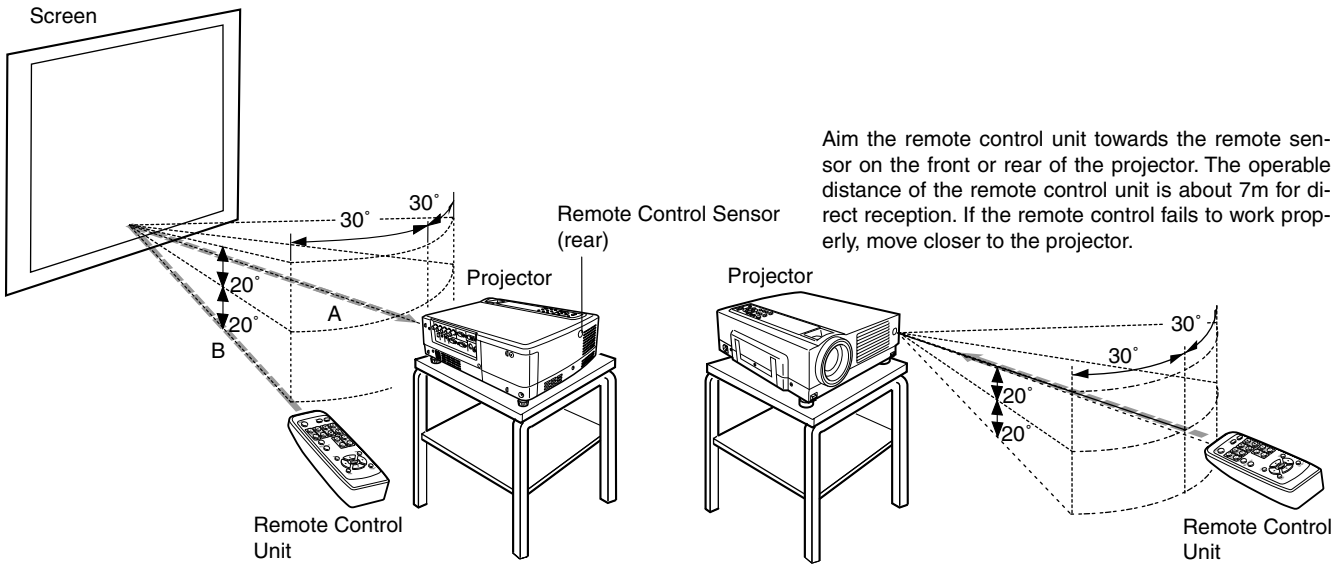

Aim the remote control unit towards the remote sensor on the front or rear of the projector. The operable distance of the remote control unit is about 7m for direct reception. If the remote control fails to work properly, move closer to the projector.

■ Using as a wired Remote Control

By connecting a separately sold remote control (RM-M3010) and cable (about 3m: QAM0081-001/ 15m: QAM0247-001) to the REMOTE terminal, the remote control can be used as a wired control unit. When connected to the cable, the remote control's transmitter and the projector's sensor would not function. Please keep within the range of the remote cable length. Warranty is not extended to the case where an extension cord is used.

❊ The ESCAPE button on the separately sold remote control (RM-M3010) is equivalent to the EXIT button on the supplied remote control unit. There is no equivalent to the H, V-KEYSTONE and FOCUS buttons found on the supplied remote control.

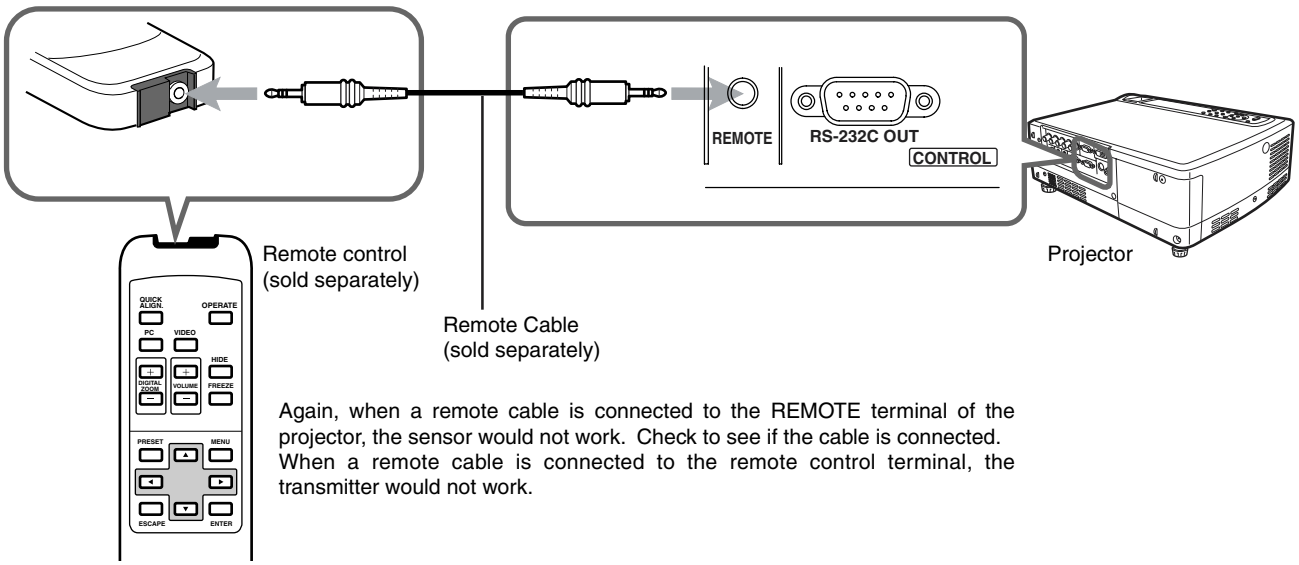

Again, when a remote cable is connected to the REMOTE terminal of the projector, the sensor would not work. Check to see if the cable is connected. When a remote cable is connected to the remote control terminal, the transmitter would not work.

When the remote control unit fails to work properly

- When the batteries in the remote control unit are exhausted, improper functioning would occur. Please replace with new batteries.
- When either the remote control unit or projector alone is connected to the remote cable, the connected side will not be able to work. Please check the cable connection.

Connecting to Various Devices

Signals that can be input into the projector

The following signal can be input to the projector.

■ Video signals

(1) Response to Decoder

Input terminal \ Decoder	NTSC	NTSC4.43	PAL	SECAM
VIDEO	O	O	O	O
Y/C	O	O*1	O	– – – – –
Y,PB/CB,PR/CR*3	O*2	O*2	O*2	O*2
G,B,R,H/Cs,V*4	O*2	O*2	O*2	O*2

*1: Responds if Y/C output is available.
*2: Signifies that component signals (Y, PB, PR/Y, B-Y, R-Y/G, B, R, H/Cs, V) conform to the signal timing (synchronization and video period) of each decoder. The decoders are used for convenience.
*3: To use these signals, it is required to set the “PC2 (BNC)” item in the “Options” menu to “YPBPR” (☞ page 39)
*4: To use these signals, it is required to set the “PC2 (BNC)” item in the “Options” menu to “RGB” (☞ page 39)

(2) Responds to double density(*5), high-vision signals.

Input terminal \ Decoder	NTSC*6	PAL*7	High-vision signal
Y,PB/CB,PR/CR*8	O	O	O
G,B,R,H/Cs,V*9	O	O	O

*5: Signals of which density of scanning lines/field is twice as high.
*6: Responds to signals of which the horizontal scanning frequency is 33.25kHz. NTSC can be made twice as dense by a line doubler (separately available: recommended article). It is also possible to respond to fully-specified, decoded wide-clear-vision signals and decoded 525p progressive signals.
*7: Responds to signals of which the horizontal scanning frequency is 33.5kHz. PAL can be made twice as dense by a line doubler (separately available: recommended article).
*8: To use these signals, it is required to set the “PC2(BNC)” item in the “Options” menu to “YPBPR”.(☞ page 39)
*9: To use these signals, it is required to set the “PC2(BNC)” item in the “Options” menu to “RGB”.(☞ page 39)

(3) Response to DTV-format signals

DTV-format signals (480i, 480p, 720p, 1080i) can be input to the Y, PB/CB, PR/CR*10 input terminals
*10 : To use these signals, it is required to set the “PC2(BNC)” item in the submenu Option 1 to “YPBPR”.(☞ page 39)

■ Computer signals

- Computer signals can be input to the PC1, PC2 (G,B,R,H/Cs,V) or PC3 (DVI-D) terminals.

Scanning frequency in the following range can be inputted.

Horizontal scanning frequency : 15kHz – 120kHz
Vertical scanning frequency : 50Hz – 120Hz

Be sure that the computer to be used meets the following conditions.

- **The computer has a video signal output port.**
  Confirm if the computer has a video signal output port by consulting the computer manuals.
  The video signal output port is generally called ‘RGB port’, ‘monitor port’, or ‘video port’. In the case where the computer comes with a build-in monitor or a notebook, the external output port may need to be purchased. Also, note that an external output port cannot be installed in some computers.
- **The resolution and the scanning frequencies are within the range specified in the table on page 20.**
  Be sure that the resolution and the scanning frequencies of the video signal are within the range.
  A video signal out of the range cannot be used. (Out of range signals can be projected but the image may not turn out sharp. On the other hand, even signals within the range may require adjustments, depending on the video board used.)
  When signals other than those listed in the table on page 19 are input, the image could be partially erased or unwanted folds-over the image could appear.
  Some signals within the frequency range may not be displayed normally depending on the type of the signal. Composite sync (Cs) and G on Sync signals cannot be handled depending on the devices connected.

■ Allowable input signals

Signal			Horizontal resolution Hor[Pixels]	Vertical resolution Ver [Lines]	Horizontal frequency H [kHz]	Vertical frequency V [Hz]
PC system	PC98	VESA350	640	350	37.86	84.13
	PC/AT	PC98	640	400	24.83	56.42
	DOS/V	VGA 60Hz*	640	480	31.47	59.94
	DVI*	VGA 72Hz*	640	480	37.86	72.81
		VGA 75Hz*	640	480	37.50	75.00
		VGA 85Hz*	640	480	43.27	85.01
		SVGA 56Hz*	800	600	35.16	56.25
		SVGA 60Hz*	800	600	37.88	60.32
		SVGA 72Hz*	800	600	48.08	72.19
		SVGA 75Hz*	800	600	46.88	75.00
		SVGA 85Hz*	800	600	53.67	85.06
		XGA 43Hz*	1024	768/2	35.52	43.48
		XGA 60Hz*	1024	768	48.36	60.00
		XGA 70Hz*	1024	768	56.48	70.07
		XGA 75Hz*	1024	768	60.02	75.03
		XGA 85Hz*	1024	768	68.68	85.00
		SXGA 43Hz*	1280	1024/2	46.43	43.44
		SXGA 60Hz*	1280	1024	63.98	60.02
		SXGA 75Hz*	1280	1024	79.98	75.03
		SXGA 85Hz	1280	1024	91.15	85.02
		SXGA+	1400	1050	64.02	60.00
		UXGA 60Hz	1600	1200	75.00	60.00
	Mac	MAC13	640	480	35.00	66.67
		MAC16	832	624	49.73	74.55
		MAC19	1024	768	60.24	74.93
		MAC21	1152	870	68.68	75.06
VIDEO system	Video	HDTV(1035i) 60Hz			33.75	60.00
		HDTV(1035i) 59Hz			33.72	59.94
		480p	720	483	31.47	59.94
		720p 60Hz			45.00	60.00
		720p 59Hz	1280	720	44.96	59.94
		1080i 60Hz	1280	720	33.75	60.00
		1080i 59Hz	1920	1080/2	33.72	59.94
		1080i 50Hz	1920	1080/2	28.125	50
		1080 30SF/30P	1920	1080/2	33.750	60/30
		1080 25SF/25P	1920	1080	28.125	50/25
		1080 24SF/24P	1920	1080	27.000	48/24
		NTSC	1920	1080	15.734	60
		PAL			15.625	50
		SECAM			15.625	50

- UXGA signals cannot be projected when the screen mode is set to 16:9. (☞ page 31)
- The resolutions for the input signals are listed in the table above.
- Certain types of signals in the frequency range may not be displayed normally.
- When a signal other than those listed above is input, the image could be partially erased or unwanted folds-over the image could appear
- Some signals other than those listed above can be displayed. However, they may require adjustment.
- Some of the signals listed above may require adjustment depending on the video board used.
- Composite sync (Cs) and G on Sync signals cannot be handled depending on the devices connected.
- VGA signals from the PC could at times be displayed in the video 480p mode.
  (In this case, the projector enters the video menu when the MENU button is pressed.)

Connecting to Devices

Before connection, be sure to turn off both the projector and device.

■ Connecting to Video Devices

- Read thoroughly the manual that comes with each video device.
- Use the supplied AV connection cable. S-video [Y/C] cable, BNC cable and PC Audio cables are not supplied.

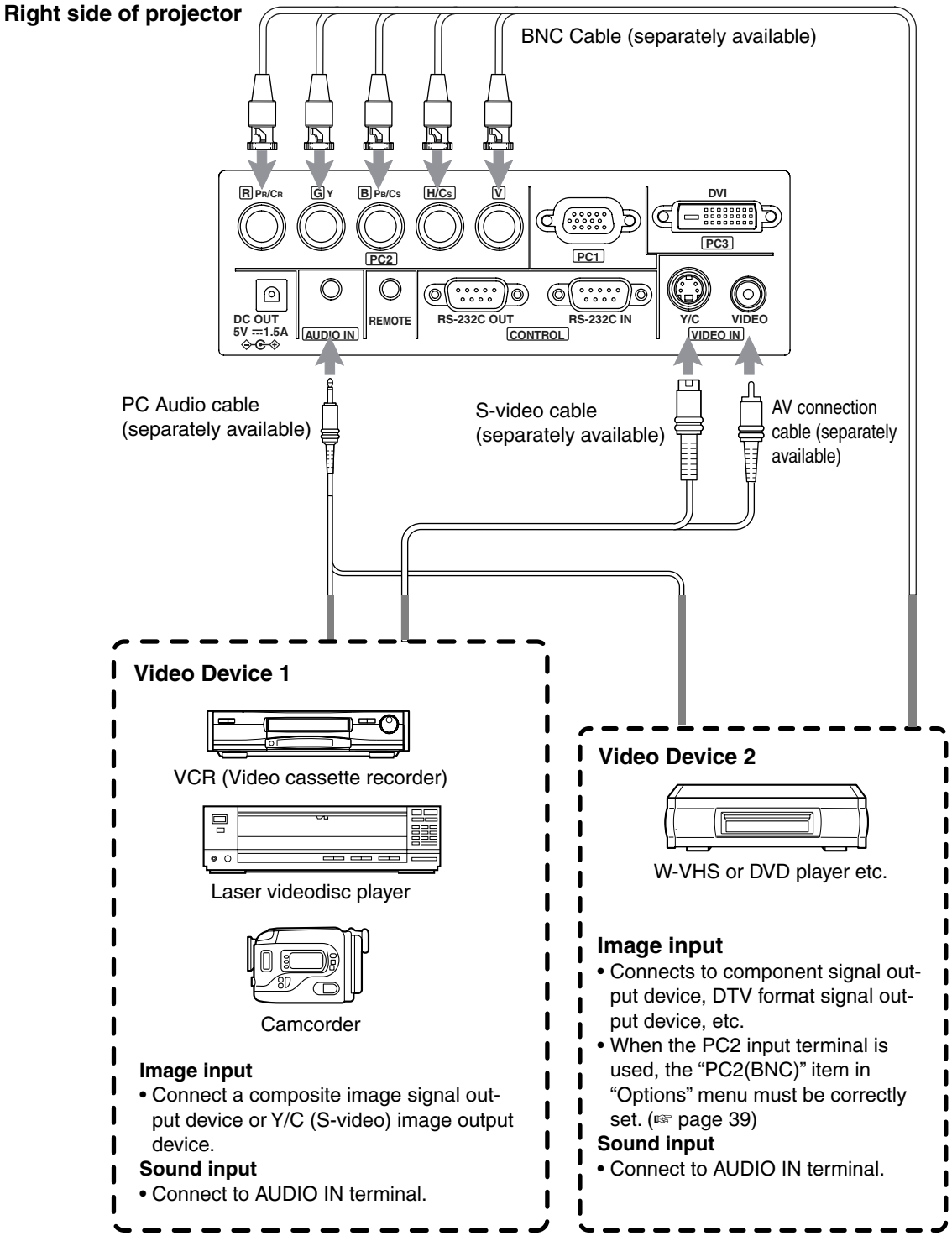

Connection

- When connecting a video device, please use a TBC along with it, or use one with a built-in TBC.
- Use of an extension cable to connect a video device and the projector could cause image deterioration or projection failure.
- When a signal with much jitter is reproduced on a VCR, or special-effect playback is performed, the upper part of the image or the screen may be interrupted, erased or distorted.

■ Connecting to Computers

- Please read thoroughly the manual that comes with the computer devices
- Use the supplied computer connection cable. Also prepare cables for connecting the devices.

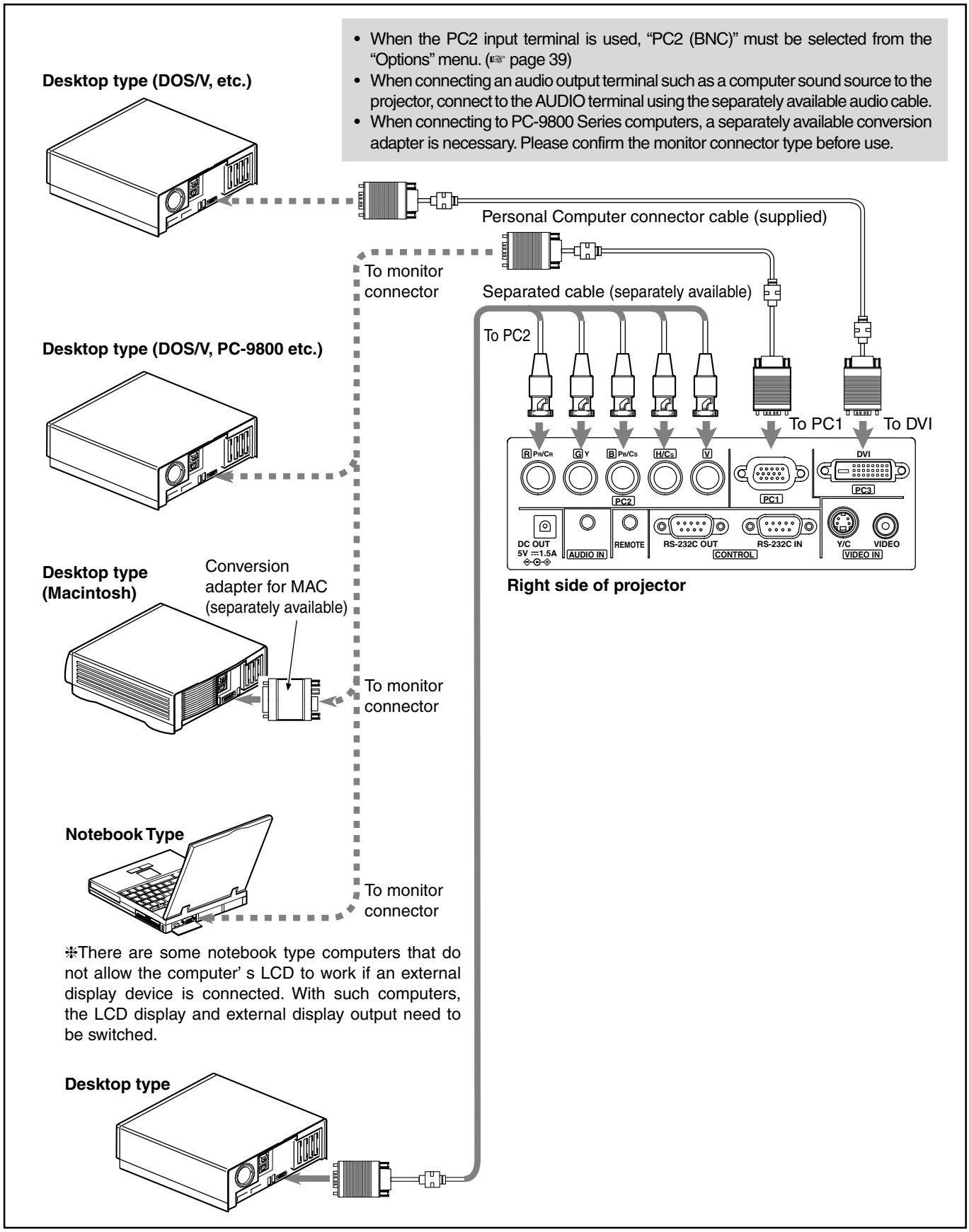

■ Control from external device

- It is possible to control the projector with a computer by connecting the computer to the CONTROL RS232C IN terminal of the projector.
  ❊ Please request the connection cable from us if needed.
  ❊ For more information, please go to your authorized dealer.

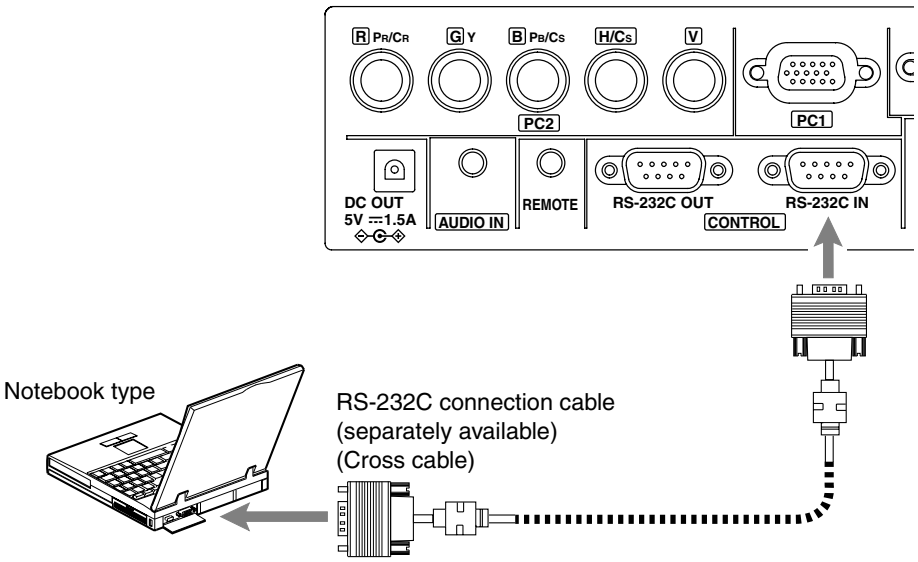

Connection for controlling more than one projector

By using the CONTROL terminal, more than one projector can be controlled simultaneously by one computer.
Connect the OUT terminal of the first projector to the IN terminal of the second projector, then connect the OUT terminal of the second projector to the IN terminal of the third projector. Connect these projectors in series.

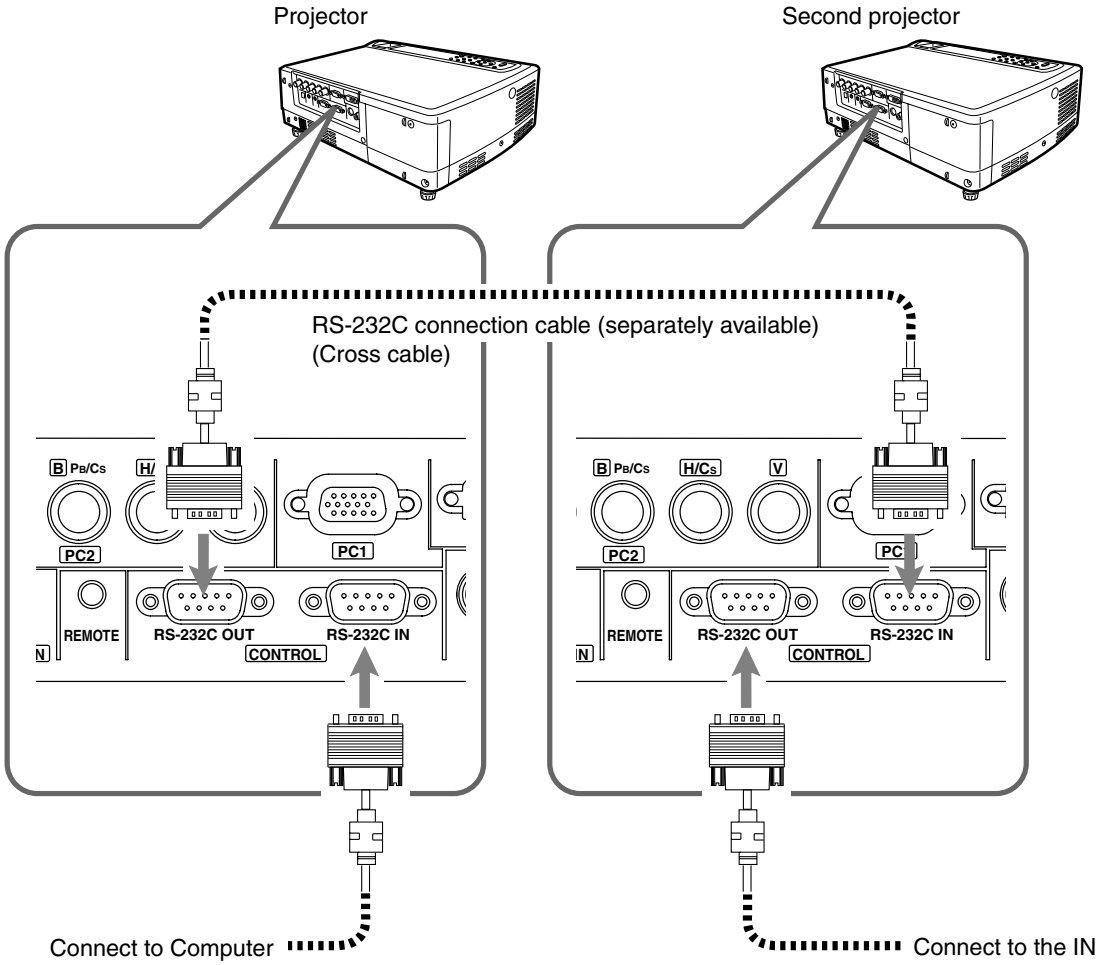

Connecting the Power Cord (supplied)

After all devices have been connected, connect the supplied power cord.

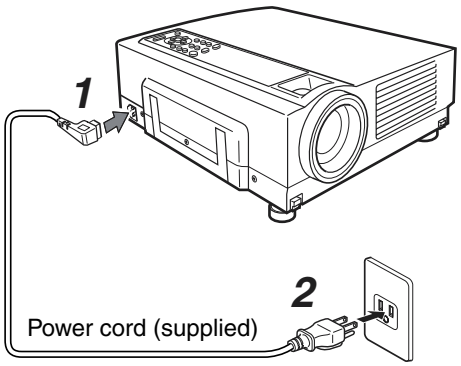

1. Connect the supplied power cord to the power input terminal of the projector.

2. Insert the main plug of the supplied power cord into the wall outlet.

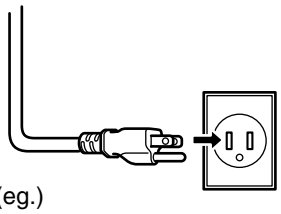

(eg.)

Cautions Against Fire and Electric Shock

- **Since the power requirement of the projector is high, please insert the power plug directly into a wall outlet.**
- When not using devices, remove the power cords from the wall outlets.
- Do not use power cords other than those supplied.
- Do not use a power voltage different from that which is indicated.
- Do not cut, tear or modify the power cords. Also, do not put a heavy object on, heat, or stretch the power cords, otherwise they may be damaged.
- Do not insert or pull out the plugs with a wet hand.

■ Removing the Lens Cap

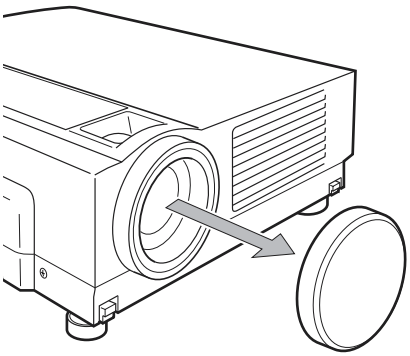

Lens Cap

When using the projector:

- **Remove the lens cap.**
  - ❊ Be sure to fit the lens cap on when the projector is not in use to keep out dirt.
  - ❊ Please do not project with the lens cap on. The Lens cap may be deformed by heat.

Basic Operations

If projector set up is not yet complete, please read 'Adjustments and Settings Using Menus' on page 32 and perform the necessary settings.

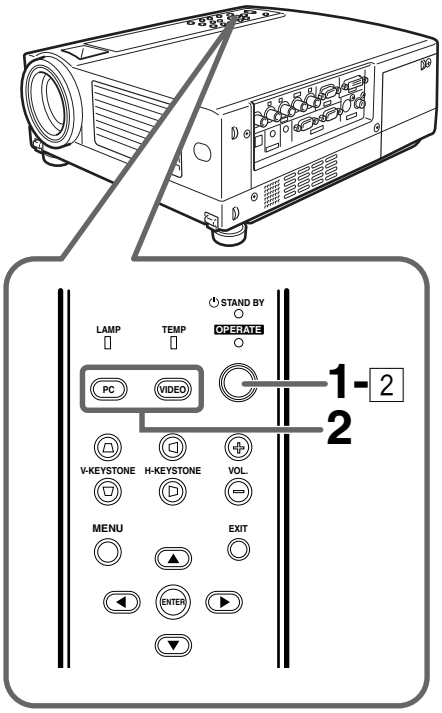

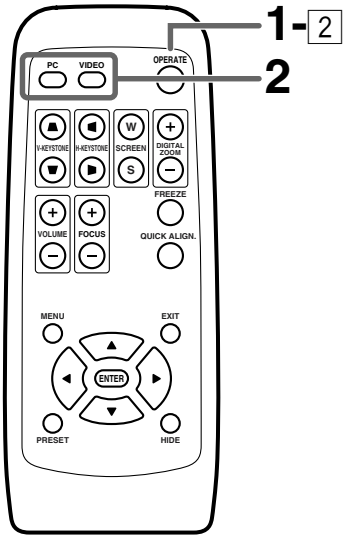

Note

- Messages are displayed in the language set by the user in the "Language" menu. The preset language upon purchase is "English". The user can choose from 8 national languages. (☞ page 39)
  However, the input mode (PC 1, PC 2, PC 3, Y/C, VIDEO) and button indications (FREEZE, D.ZOOM, EXIT) are only displayed in English irrespective of the display language setting.

Basic Operation Procedures

Once the basic settings are done, follow the procedures below:

1. Power On

1 **The STAND BY indicator lights up when the power cord is connected.**

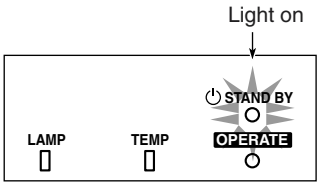

Projector: Indicator part

2 **Press the OPERATE button on the projector (or the OPERATE button on the remote control unit) for one second or more.**
The OPERATE indicator lights up and the projected screen appears slowly.

Projector: Control panel

Remote control unit

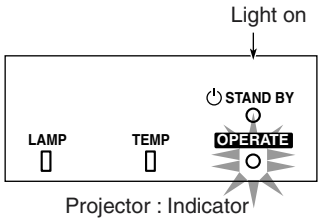

Projector : Indicator

Notes

- Upon projection, the image may flicker for a few seconds, but this is not a malfunction.
- When the lamp is turned on, it will slowly become brighter. It will take more than a minute for the brightness to stabilize.

2. Selecting the image to be projected

■ **When you select an image device to be connected to the VIDEO IN (VIDEO or Y/C) terminal: press VIDEO.**

Projector: Control panel

Remote Control Unit

Each time you press either button, the selected input changes as follows.

VIDEO ⟷ Y/C

VIDEO : Image from the input VIDEO terminal on the right hand side of projector will be projected.

Y/C : Image from the input Y/C terminal on the right hand side of the projector will be projected.

Screen display

When "Line display" (☞ page 39) is set to "5 sec" : After changing an input , the new selection will appear on the screen for about 5 seconds.

■ When selecting a computer or other devices connected to PC1, PC2 or PC3 : Press PC

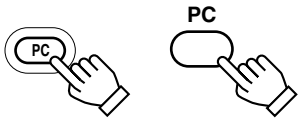

Projector: Control Panel — Remote Control Unit

Upon pressing the button, the input mode changes as follows.

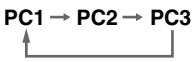

PC1 : Projects image from PC1 input terminal on the right hand side of the projector.
PC2 : Projects image from PC2 input terminal on the right hand side of the projector
PC3 : Projects image from PC3 input terminal on the right hand side of the projector.

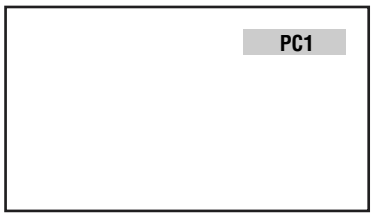

Screen display

When "Line display" (☞ page 39) is set to "5 sec": after changing an input, the new selection will appear on the screen for about 5 seconds.

Notes

- Sound is formed from sound signals connected to the AUDIO terminal.
- When no image is input to the selected input terminal, the message "No Input" is displayed on the screen. (☞ page 49)
- When the PC2 input terminal is used, "PC2(BNC)" must be selected from the "Options" item in the main menu. (☞ page 39)

3. Adjusting the Zoom Ring (the screen size) for DLA-SX21U/DLA-SX21E

■ To enlarge the screen size: Turn the zoom ring towards the 'Wide' side.
■ To reduce the screen size: Turn the zoom ring towards 'Tele' side.

4. Adjusting the Focus Ring(Focus) for DLA-SX21U/DLA-SX21E

■ To focus on nearer points: Turn the focus ring towards the 'Near' side.
■ To focus on farther points: Turn the focus ring towards the 'Far' side.

❊ For DLA-SX21SU/DLA-SX21SE users, focus can be adjusted using the Focus ⊕ / ⊖ buttons on the remote control.

■ To focus on nearer points: press the ⊕ button.
■ To focus on farther points: press the ⊖ button.

■ Display using the direct buttons

The direct buttons enable direct switching and operation without having to go through the menu.

Input mode can be selected by pressing the PC button or the VIDEO button.

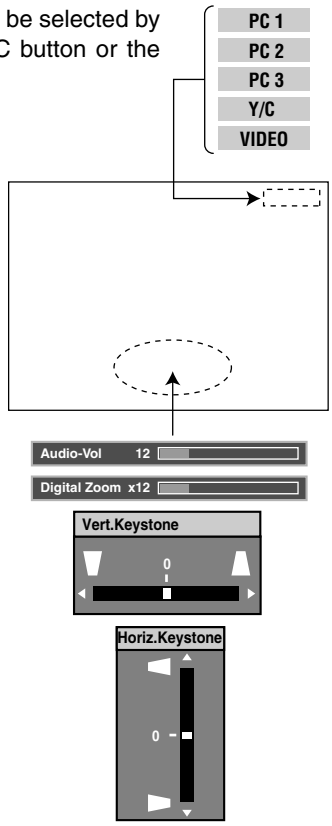

When the DIGITAL ZOOM, VOLUME, V-KEYSTONE or H-KEYSTONE button is pressed, a level bar of the function is displayed.

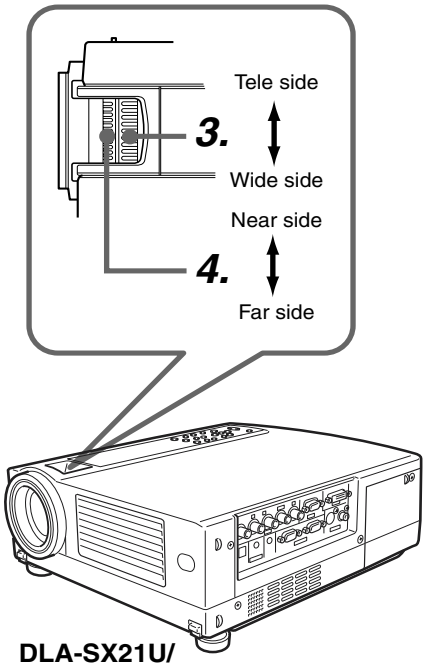

DLA-SX21U/ DLA-SX21E

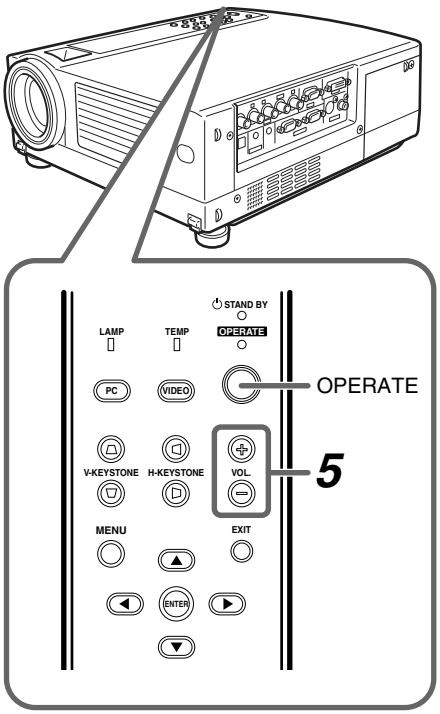

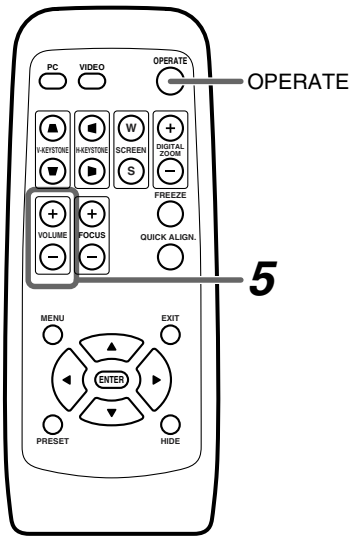

5. Adjusting the Sound Volume

- **To increase the volume: press VOLUME ⊕ (0 → 50)**
- **To lower the volume : press VOLUME ⊖ (50 → 0)**

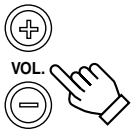

Projector: Control panel

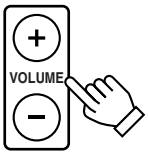

Remote Control Unit

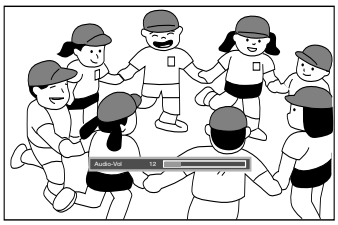

Screen display

When "Menu display" (☞ page 39) is set to "15sec", after pressing the VOLUME button, the sound volume display will appear on the screen for about 15 seconds. (Press EXIT button to immediately remove the Audio-vol display.)

Note

- When the sound volume is displayed on the screen, pressing the PRESET button will reset the set value to "0".

Power Off

1. Press the OPERATE button on the projector (or the OPERATE button on the remote control unit) for 1 second or more.

The OPERATE indicator will disappear, the STAND BY indicator starts to blink , and the projector goes into the cool-down mode.

- The STAND BY indicator will continue blinking for approximately 90 seconds as the temperature of the light source lamp cools (Cool Down Mode)

Projector: Control Panel

Remote Control Unit

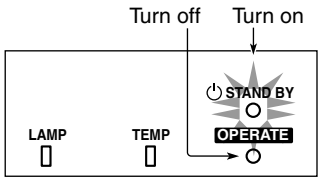

Projector: Indicator part

Note

- The OPERATE button will not work for approximately 1 minute from when the light-source lamp is turned on. Please use the button after approximately 1 minute.

Caution

- Please do not pull out the plug from the power source when the STAND BY indicator is blinking. It will shorten the life of the lamp and cause malfunction.

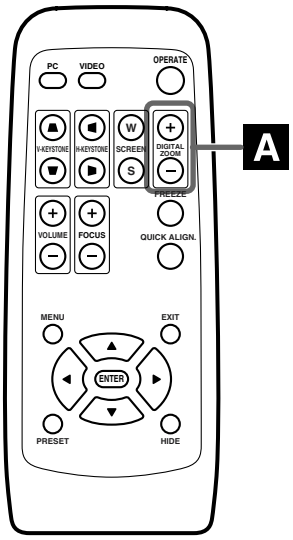

■ "Digital zoom" Display

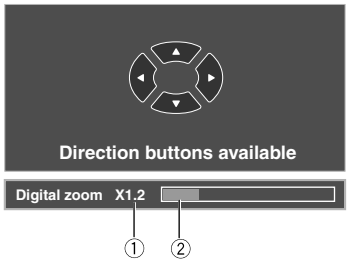

① Magnifying power display

x1.0: 1	time (standard)	x2.0: 2	times
x1.2: 1.2	times	x2.5: 2.5	times
x1.4: 1.4	times	x3.2: 3.2	times
x1.6: 1.6	times	x4.0: 4	times

② Level Display

Level shown is based on selected magnification.

Note

- The quality of the zoomed image is reduced in comparison with the original one.

Frequently used Convenient Functions

When an image is projected onto the screen, the following operations can be performed directly without going through the menu operation. (☞ page 27 for VOLUME operation.)

DIGITAL ZOOM
HIDE
FREEZE
KEYSTONE
QUICK ALIGN. (quick alignment)
SCREEN

A Enlarging the Image

We can zoom up while not changing the size of the projected screen. After zooming, the position of the image displayed can be moved.

- This cannot be done using the projector buttons. Please use the remote control unit.

1. Press DIGITAL ZOOM ⊕.

"Digital zoom" display appears on the screen and the projector changes to the Digital Zoom Mode.

- When pressed,the image on the screen will be enlarged in 8 stages. (including Standard)

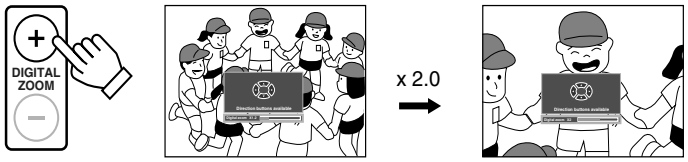

Remote Control Unit

2. While "Digital zoom" display appears on the screen, you can move the zoomed image with the cursor buttons on the remote control.

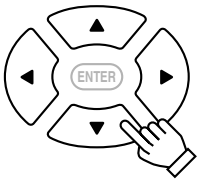

Remote Control Unit

- ■ To see the upper part of zoom up image: Press ▲.
- ■ To see the lower part of zoom up image: Press ▼.
- ■ To see the right part of zoom up image: Press ►.
- ■ To see the left part of zoom up image: Press ◄.

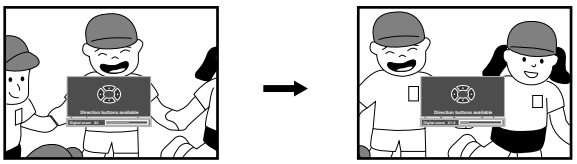

To reduce the size of the image

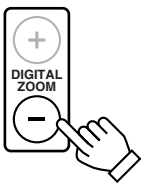

When the DIGITAL ZOOM ⊖ button is pressed, the previously enlarged image will be reduced progressively until it returns to the original size.

To reduce the image to the original size

When the PRESET button is pressed, the image will return to its original size and position.
(Please operate while "Digital zoom" is displayed.)

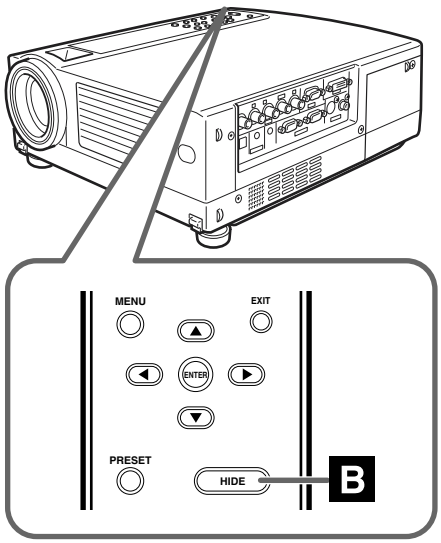

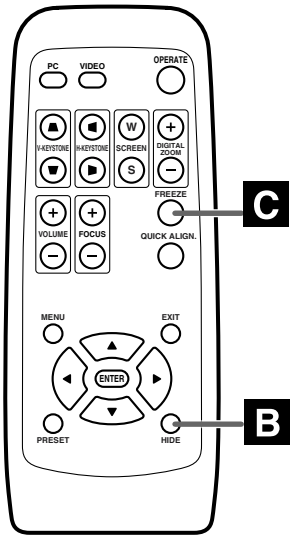

B Turning Off Image and Sound

Video image and sound can be temporarily turned off.

Press the HIDE button once:

Image and sound turn off.

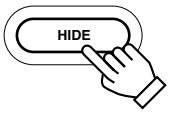

Projector: Control Panel

Remote Control Unit

Press the HIDE button again:

Video Image and audio sound come on again.

Note

- When the projected image input is changed, the HIDE function is cancelled and image and sound return.

C Displaying a Still Picture

The projected image can be stilled temporarily.

- This operation cannot be operated by the projector buttons. Please use the remote control unit.

Press the FREEZE button.

Picture stills after the FREEZE button is pressed for a few seconds and a message is shown in the center of the screen. An icon indicating the “FREEZE” mode will be displayed on the top right corner of the screen.

Remote Control Unit

“FREEZE” icon

To de-freeze the image

When you press the FREEZE button again, the image de-freezes and resumes.

Notes

- After de-freezing the still picture, note that the projector will not play the picture that comes immediately after. (Should you want to play the picture that comes immediately after that at which the freeze button was pressed, please pause the picture at the play device etc.)
- MENU, QUICK ALIGN, H and V KEYSTONE and SCREEN button cannot function when picture is still.
- The “FREEZE” message will disappear after 5 seconds. To forcibly clear “FREEZE”, please press the EXIT button.

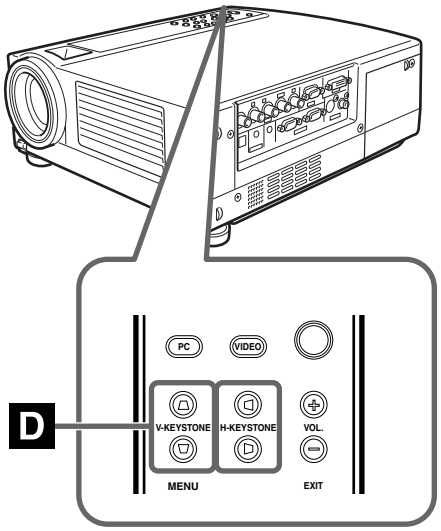

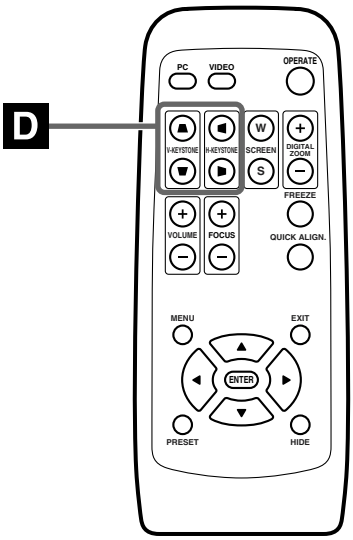

■ "Vert. Keystone" Display

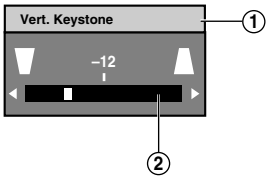

① Adjusted value
range: - 100 ~ 0 ~100

② Level displayed
level displayed is based on the adjustment value.

■ "Horiz. Keystone" Display

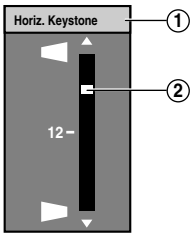

① Adjusted value
range: -40 ~ 0 ~40

② Level displayed
level displayed is based on the adjustment value.

D Removing the Trapezoidal Distortion of the Image

Depending on the angle of projection onto the screen, the image may get distorted in trapezoid form sometimes.
When installing the projector or screen for the first time, or when reinstalling in other rooms, etc., the trapezoid distortion (Keystone) has to be removed by adjustments.

Press V-KEYSTONE ▲/ ▼ to adjust in the vertical direction.

A "Vert. Keystone" display appears on the screen, and the projector goes into the KEYSTONE MODE.
Press button (▲/ ▼) in the direction that corrects the trapezoid form.

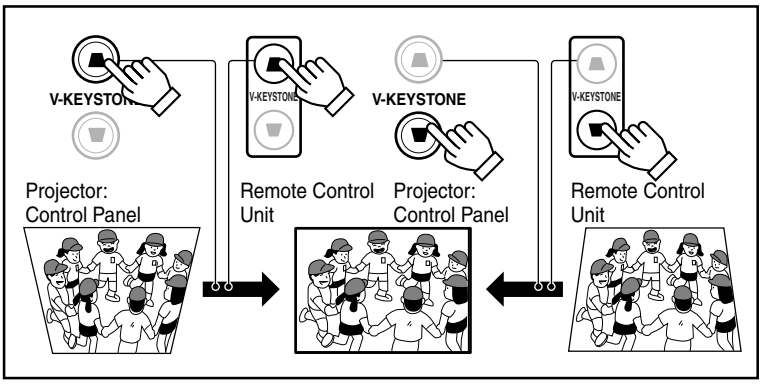

Notes

- The range where the trapezoidal distortion can be rectified is **30˚ vertically and 10˚ horizontally** with respect to the projector screen. However, when both are rendered together, the range of effective rectification will be narrower.
- Depending on the signal inputted, the keystone adjustment range may narrow or parts of the image may disappear. This is not a malfunction.
- Interference patterns may appear on the screen when adjusting the keystone. This is not a malfunction.
- To restore the original set value, press the PRESET button. (Adjusted value: 0)

Press H-KEYSTONE ◀/ ▶ to adjust in the horizontal direction

A "Horiz. Keystone" display appears on the screen, and the projector goes into the KEYSTONE MODE.
Press button (◀/ ▶) in the direction that corrects the trapezoid form.

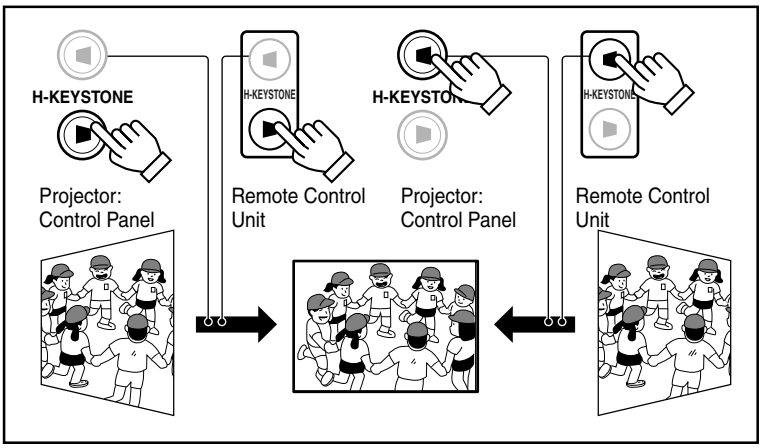

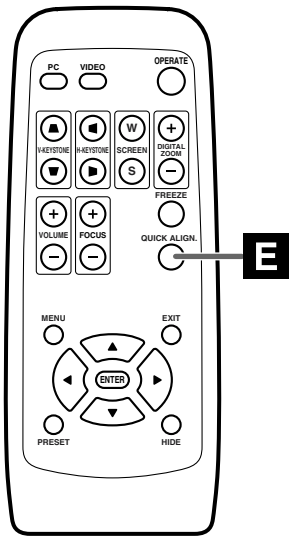

E Using the Quick Alignment function

The quick alignment function automatically adjusts (sets) the screen settings of the image input from the PC 1 or PC 2 input terminal.

- This can only be performed with the remote control.

Press the QUICK ALIGN (Quick Alignment) button.

During automatic alignment, “QUICK ALIGN...” appears on the screen, and disappears after alignment is complete.

Notes

- **The “Quick Alignment” function only works when computer signals are input into the input terminal of either PC1 or PC2.** It does not work when the signal is input from the VIDEO IN terminal(VIDEO or Y/C input terminal).
- **The Quick Alignment function.**
  The adjustments of “Horiz. disp. pos.” and “Vert. disp. pos.”, “Phase”, “Tracking”, etc. are automatically carried out.
- **Using the Quick Alignment function for quick adjustment.**
  Please perform this with a bright still-picture. This function may not work correctly on a dark picture or a motion-picture.
  If adjustment with the Quick Alignment function is not satisfactory, adjust “Horiz. disp. pos.” and “Vert. disp. pos.”, “Phase” and “Tracking” individually.

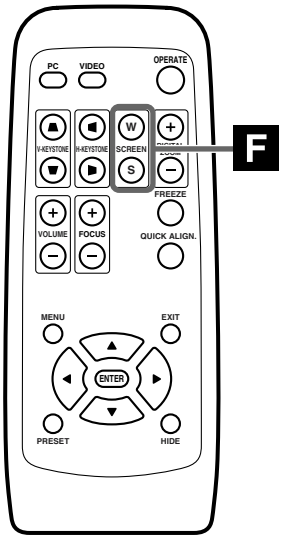

F Selecting the Screen Size

Press the SCREEN button to select the wide screen size (16:9) or the standard screen size (4:3).

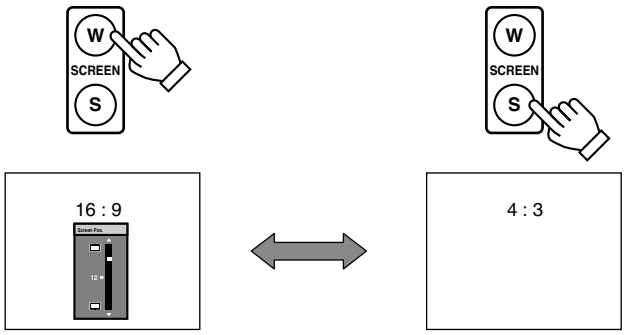

Note

- Selecting Ⓦ or Ⓢ according to the input signal will change the projected image as shown in the following tables.

	Image of 4:3		Image of 16:9
Setting the screen size to [4:3]	(Original image)	➡	(Aspect ratio)
Setting the screen size to [16:9]	(Original image)	➡	(Aspect ratio)

- Screen size can also be chosen from the “Options menu”. (☞ page 37)

- When the screen mode is set to 16:9, UXGA signals cannot be projected. (☞ page 39)

■ Screen size display

Displays when Ⓦ is selected. Move the image position with the cursor button ▲ or ▼.

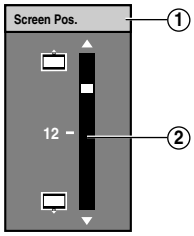

① Adjusted value
range: -30 ~ 0 ~30

② Level displayed
level displayed is based on the adjustment value.

Adjustments and Settings Using Menus

The menus displayed on the screen are used to perform adjustment and setup for the projector.

The Menu Structure

The menus of the projector have the following structure.

Video Input selection

Main menu | **Submenu**

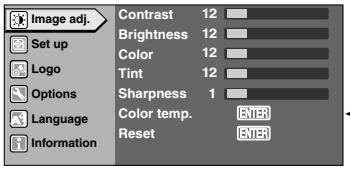

1 Main: “Image adj.” menu

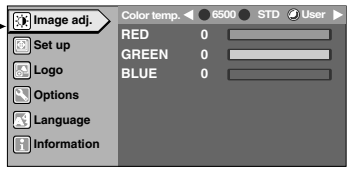

2 “Color temp.” menu

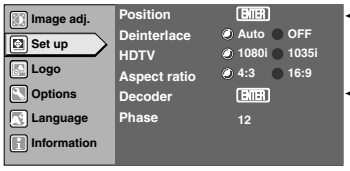

3 Main: “Set up” menu

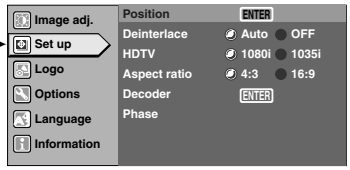

4 “Position” menu

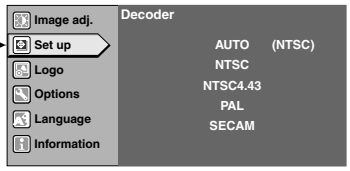

5 “Decoder” menu

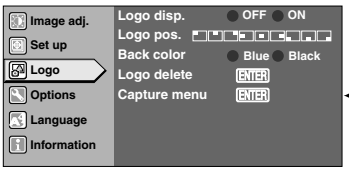

6 Main: “Logo” menu

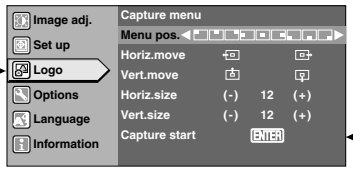

7 “Capture menu”

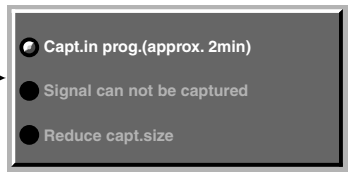

8 “Capture start”

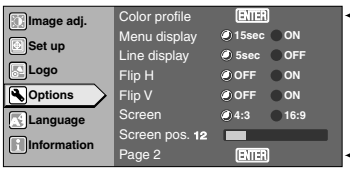

9 Main: “Options” menu (“Page 1”)

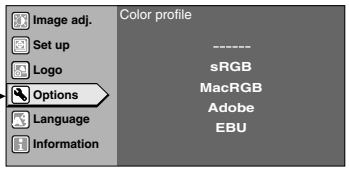

10 “Color profile” menu

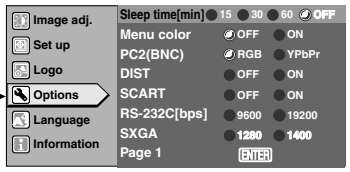

11 Main: “Options” menu (“Page 2”)

12 Main: “Language” menu

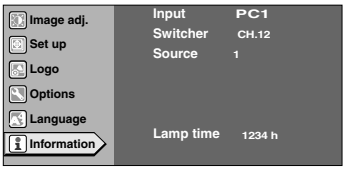

13 Main: “Information” menu

Note

- The display language of the menus is set to “English” when the projector is bought. The display language can be selected from the following 8 languages. (☞ page 39) However, certain phrases and nouns, etc., are displayed only in English.

When PC input is selected

Main menu | **Submenu**

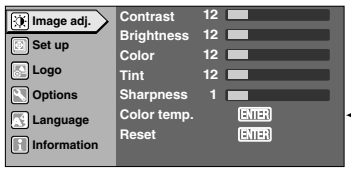

1 Main: “Image adj.” menu

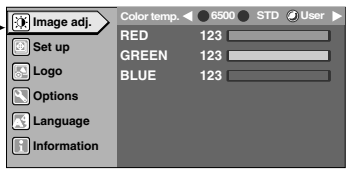

2 “Color temp.” menu

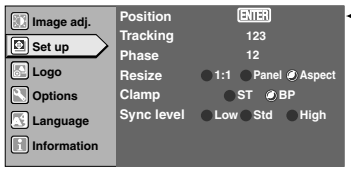

3 Main: “Set up” menu

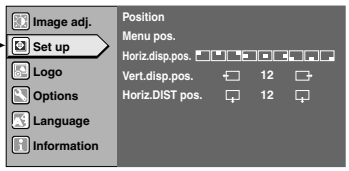

4 “Position” menu

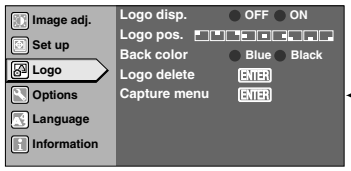

6 Main: “Logo” menu

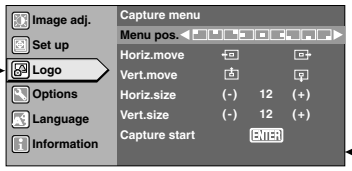

7 “Capture menu”

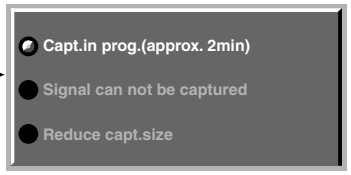

8 “Capture start”

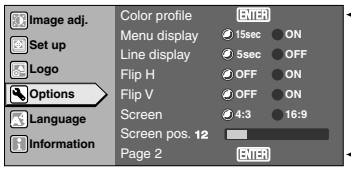

9 Main: “Options” menu (“Page 1”)

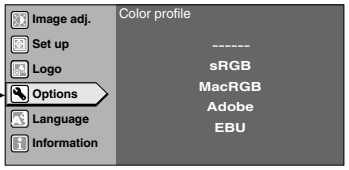

10 “Color profile” menu

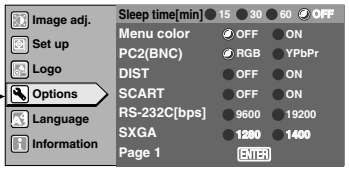

11 Main: “Options” menu (“Page 2”)

12 Main: “Language” menu

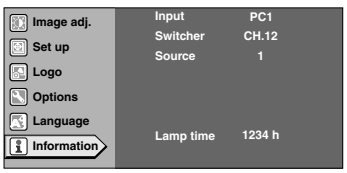

13 Main: “Information” menu

Note

- The display language of the menus is set to “English” when the projector is bought. The display language can be selected from the following 8 languages. (☞ page 39) However, certain phrases and nouns, etc., are displayed only in English.

When no image signal is inputted

Main menu | **Submenu**

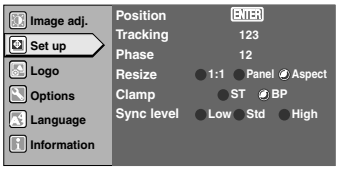

1 Main: “Set up” menu

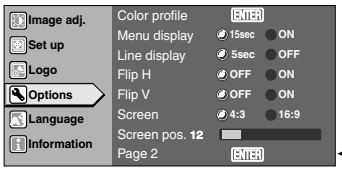

9 Main: “Options” menu (”Page 1”)

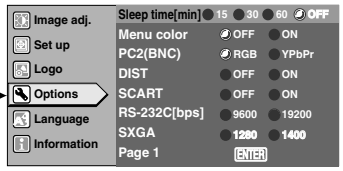

11 Main: “Options” menu (“Page 2”)

12 Main: “Language” menu

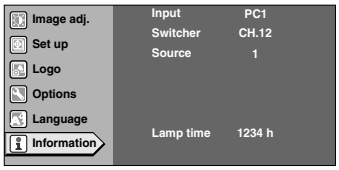

13 Main: “Information” menu

Note

- The display language of the menus is set to “English” when the projector is bought. The display language can be selected from the following 8 languages. (☞ page 39) However, certain phrases and nouns, etc., are displayed only in English.

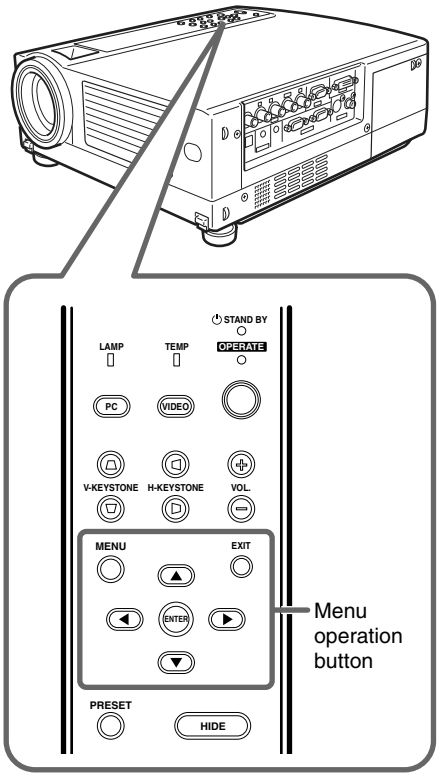

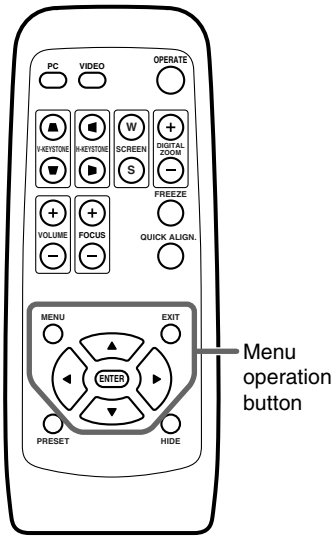

The Menu Operation Buttons

The menu is operated with the following buttons on the projector/remote control:

Button		Function
Main unit	Remote control unit	
MENU	MENU	Displays the main menu on the screen. • When the main menu is displayed, press to exit the menu mode.
ENTER	ENTER	Select an item while the main menu (hierachy1) is displayed; the submenu (hierachy 2) corresponding to the item selected will be displayed on the screen. Press to shift to the “Set up” screen (hierachy3) of the selected item against which “ENTER” is displayed.
EXIT	EXIT	Press to return to the previous menu. While the main menu is displayed, press to exit the menu mode.
Main unit Remote control unit		**While the main menu and sub-menu (“Image adj.”, “Set up”, “Options”, “Logo”) is displayed** ▲/▼ : Selects an adjustment item in the menu. ◀/▶ : Sets the value of the item selected. The adjusted set value is immediately reflected on the image. **While the “Language”, “Decoder” or “Color profile” submenu is displayed** ▲/▼ : Selects an item in the menu. ◀/▶ : No effect.

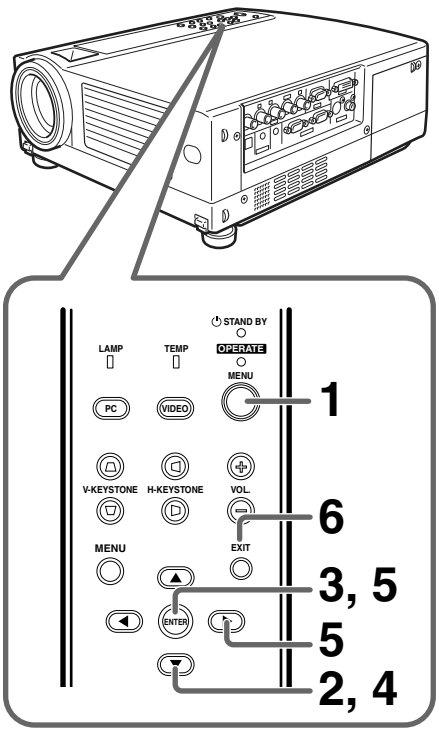

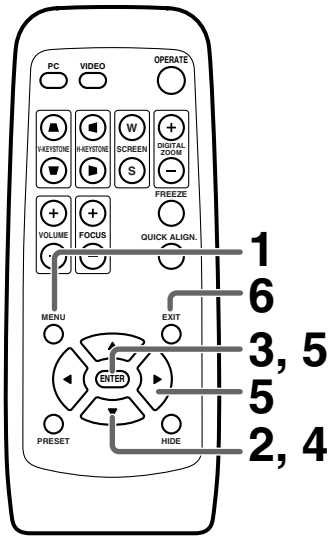

The Procedure for Menu Operation

1. Press the MENU button

The main menu is displayed on the screen.

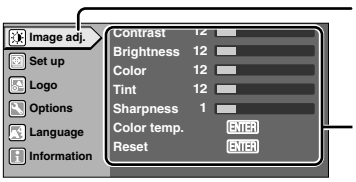

The menu item that has been selected is displayed.
The icon of the selected menu item will be highlighted.

The submenu is displayed.

E.g. Main menu when video input is selected: “Image adj.”.

2. Press the CURSOR buttons (▲/▼) to select a submenu.

- The “Image adj.”, “Set up”, “Logo”, “Options” and “Language” submenus are displayed.
- When “Information” is chosen, the image input or PC input information (whichever is currently selected) is displayed on the right of the menu.
- When “Language” is selected, you can set the language. ➔ Proceed to Procedure 6.

3. Press ENTER button or the right CURSOR button (►).

- The submenu is displayed on the screen.
- The submenu items differ when Video input or PC input is selected, or when there is no image signal inputted. For details, please see ‘The Menu Configuration’ on the next page.

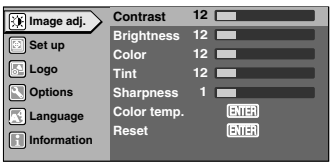

“Image adj.” menu when video input is selected.

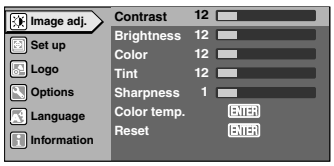

“Image adj.” menu when PC input is selected.

4. Press the CURSOR buttons (▲/▼) to select an adjustment item.

Item names in the submenu displayed in pale cannot be selected.

5. Press the CURSOR buttons (◄/►) to change the setting value.

Alternatively, press ENTER.

- When the item in the image adjustment menu against which “ENTER” is indicated is selected, either it will shift to the set up screen or the item command will be executed.

6. To EXIT after the adjustment, press the EXIT button.

Each time you press the button, the menu returns to the previous one.

7. Repeat procedures 2 to 6 to set other items.

After all adjustments are done,

Press the MENU button.
The menu will disappear from the screen.

The Menu Configuration

The value in [ ] of each item is the manufacturer set value.

- Press the ENTER, EXIT or the right CURSOR button (▶) to operate the MENU while it is displayed.
- The submenu corresponding to the item selected is displayed on the right-hand side of the main menu.
- The items indicated differ when Video input and PC input is selected or when there is no image signal inputted.
- When "Information" has been selected, the present selected image input information, etc., appears on the right side of the menu.
  There is no submenu for this "Information" menu. (For details, please See 'Main: "Information" menu' on page 40.)

1 "Image adj." menu

Image adjustment.
You can adjust the following items on the "image adj." menu.

- The items displayed differ when Video input or PC input is selected.
- There is no display when no image signal is inputted.

When Video input is selected **When PC input is selected**

Adjustment item (press ▲/▼)	Adjustment content (press ◀/▶)
"Contrast"	Adjusts the contrast of the picture image. Set value: -30~30 [0]
"Brightness"	Adjusts the brightness of the picture image. Set value: -30~30 [0]
"Color"	Adjusts the color density of the picture image. Set value: -30~30 [0]
"Tint"	Adjusts the tint of the picture image. Set value: -30~30 [0]
"Sharpness"*	Adjusts the outline of the picture image. Set value: -3~3 [0]
"Color temp."	Adjust the Color temperature of the screen. → Press ENTER button to go into the Color temperature setting menu.
"Reset"	Resets all items in the "Image adj." submenu to the pre-set values(ie values set upon purchase). → Press ENTER button to reset.

* In the "Set up" menu 3, if the "Resize" function in the PC submenu is set to "1:1", the image quality will not change even if the value is changed. (No adjustment)

2 "Color temp." menu

To adjust the "Color temp." of the projected image, press the (▲/▼) CURSOR buttons and choose the setting. Next press the (◀/▶) CURSOR buttons to set the "Color temp.". If "6500" is set, the image will turn out reddish.

Set value: "6500", "Normal", "User" ["User"]
"RED" : –255 ~ 0 [0]
"GREEN" : –255 ~ 0 [0]
"BLUE" : –255 ~ 0 [0]

3 "Set up" menu

To set the basic setting for Tracking and Positioning of the picture image, you can adjust the items in the "Set up" menu as below.

- The adjustment items differ when selecting Video input and PC input.

When Video input is selected

Adjustment item (press ▲/▼)	Adjustment content (press ◀/▶)
"Position"	The position of the image and the menu can be adjusted. → Press the ENTER button to enter the "Position" menu 4.
"Deinterlace"	This is set when viewing movies. "AUTO": Normally, the projector is set to AUTO. "OFF" :This is set when not viewing movies.
"HDTV"	In order to display the signals of "HDTV" by the exact aspect ratio of 16:9, the right numerical value has to be set. "1080i" : Normally, set to 1080i. "1035i" : Set when high vision signals are used. "SF" :Used for segment frame signals
"Aspect ratio"	Select the vertical-to-horizontal ratio of the image projected. Set it to 4:3 for the normal television image input and 16:9 for Hi-Vision input. When the "Screen" mode is set to 16:9, UXGA signals cannot be projected. Set value: 4:3, 16:9 [4:3]
"Decoder"	Sets the "Decoder". → Press the ENTER button to enter the "Decoder" menu 5.
"Phase"	Adjusts flickering or dim image. (setting is normally not required) When the "Screen" mode is set to 16:9, UXGA signals can not be projected. Set value : 0 ~ 31 [Varies with signals]

When PC input is selected

Adjustment item (press ▲/▼)	Adjustment content (press ◀/▶)
"Position"	Adjusts the position of the image and menu display. → Press ENTER to go to the "Position" menu 4.
"Tracking"	Adjusts lateral size and display area of image. (Setting is normally not required.) [varies with signal]
"Phase"	Adjusts flickering or dim image. (adjustment is normally not required.) Set value : 0 ~ 40 [Varies with signals]
"Resize"	When the image resolution is smaller than that of the projector's D-ILA element, the projected image will be enlarged to almost the full screen size. Set Value : *"1:1", "Panel", "Aspect" ["Aspect"]

"Clamp"	This can be used if the screen of the PC/ workstation is unstable in that it dims and brightens. Set the position of the clamp pulse to Back porch ("BP") or Sync tip ("SP"). Normally, "BP" is used. Setting value: "ST", "BP" ["BP"]
"Sync Level"	Although the inputted image signal is adjusted so that synchronization occurs automatically, this changes by changing the "Sync level" setting. Setting can be made by selecting "Low" (weaker), "Std" (factory set) or "High" (stronger). Setting value: "Low", "Std", "High" ["Std"]

* "1.1" : The image is displayed at the inputted resolution.
"Panel" : The picture image projected is virtually enlarged to the full screen size if the inputted resolution is smaller than (1400 pixels x 1050 pixels).
"Aspect" : While maintaining the original aspect ratio, the video image projected is virtually enlarged until either the horizontal or vertical side reaches the full size (1400 pixels x 1050 pixels).

When there is no image signal inputted

Adjustment item (press ▲/▼)	Adjustment content (press ◀/▶)
"Sync level"	Although the inputted image signal is adjusted so that synchronization occurs automatically, this changes by changing this setup. Setting can be made by selecting "Low" (weaker), "Std" (factory set) or "High" (stronger). Setting value: "Low", "Std", "High" ["Std"]

4 "Position" menu

Adjusts the menu display position. Press the (▲/▼) CURSORS to set the horizontal/vertical position of the menu display.

Set Value:
"Menu pos.":

[▪]

"Horiz. disp. pos." : Varies with signals.
"Vert. disp. pos." : Varies with signals.
"Horiz. DIST pos." : - 8 ~ + 7 [0]

5 "Decoder" menu

Press the (▲/▼) CURSOR buttons to choose the "Decoder" of the image signals. Normally, "Auto" is selected. When "Auto" does not function well, select the appropriate decoder accordingly.

Set Value: "AUTO", "NTSC", "NTSC4.43", "PAL", "SECAM"

["AUTO"]

6 "Logo" menu

Adjustment item (press ▲/▼)	Adjustment content (press ◀/▶)
"Logo disp."	Sets whether to indicate the user set logo (captured image: "Logo disp.") when the projector starts up. ["ON"]
"Logo pos."	Sets the position of the user set logo (captured image: "Logo disp.") when the projector starts-up. Re-setting can be performed only when the logo has been eliminated. Set value: "Logo pos.": 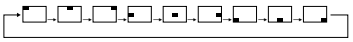 [▪]
"Back color"	Selects the background color of the user set picture (captured image: "Logo disp."). ["Black"] Re- setting can be performed only when the logo has been eliminated.
"Logo delete"	Deletes the user set logo (captured image: "Logo disp."). Deletion takes a few seconds. → Press the ENTER button to delete.
"Capture menu"	You can project the picture from the video player or PC and capture the picture you like. The captured picture can be displayed as a logo display when the projector starts up. → Press the ENTER button to go into the "Capture menu" screen.

7 "Capture menu"

Adjustment item (press ▲/▼)	Adjustment content (press ◀/▶)
"Menu pos."	Adjusts the display position of the capture menu. Set value: "Menu pos.": 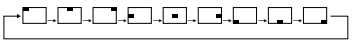 [▪]
"Horiz. move"	The position of the picture that you want to capture can be moved left/right with the CURSOR buttons (◀/▶).
"Vert. move"	The position of the picture that you want to capture can be moved up/down with the CURSOR buttons (▲/▼).
"Horiz. size"	The width of the picture that you want to capture can be set by the CURSOR buttons (◀/▶).
"Vert. size"	The height of the picture that you want to capture can be set by the CURSOR buttons (▲/▼).
"Capture start"	After setting all the items of the capture menu, image capture starts. ❊ Note that images already inputted will be deleted. → Press the ENTER button to start.

8 "Capture start"

The status of capture is displayed in bold.

"Capt. in prog. (Approx. 2min)"	
	The image is being read into the projector. During this time interval, the projector will not respond to any command signal inputted by the user.
"Signal can not be captured"	
	Clear the message with the EXIT button and input appropriate signals.
"Reduce capt. size"	
	Clear the message with the EXIT button and decrease the signal size. ❊ Depending on the image content, there will be cases where certain signals cannot be captured while others of the same size can be.

9 "Options" menu (11)

The items of the "Options" menu shown below can be adjusted.

- The "Options" menu consists of two pages ("Page 1" and "Page 2").

"Page 1"

Adjustment item (press ▲/▼)	Adjustment content (press ◀/▶)
"Color profile"	Sets the color table. → Press the ENTER button to go into the color profile menu 10 .
"Menu display"	Sets whether to clear the menu display automatically after 15 seconds. Setting value: "15sec", "ON" ["15sec"]
"Line display"	Sets whether to show the line display for about 5 seconds. Setting value: "5sec", "OFF" ["5sec"]
"Flip H"	Reverse image left to right. Setting value: "ON", "OFF" ["OFF"]
"Flip V"	Inverse image upside down. Setting value: "ON", "OFF" ["OFF"]
"Screen"	Sets the projected screen size. Setting value: 4:3, 16:9 [4:3]
"Screen pos."	Sets the display position when the "Screen" is set to [16:9]. Setting value: -30~30 [0]
"Page 2"	Displays "Page 2" of the "Option" menu. → press ENTER to go the "Option" menu ("Page 2") screen 11.

10 "Color profile" menu

To choose the color table of the image signals, press the (▲ / ▼) CURSOR buttons. When using "Color profile", set the "Color temp." to "6500".

- No display in the absence of image signal input.
  Set Value: "------", "sRGB", "MacRGB", "Adobe", "EBU"
  ["------"]

11 "Page 2"

Adjustment item (press ▲/▼)	Adjustment content (press ◀/▶)
"Sleep time [min]"	Sets the length of sleep time which, when lapsed, automatically brings the projector into the stand-by state if no signal is inputted. Setting value: 15,30,60,"OFF" ["OFF"]
"Menu color"	When "ON", menu becomes transparent and the background can be seen through it. Setting value: "OFF", "ON" ["OFF"]
"PC2 (BNC)"	Sets whether to use the BNC connector on the back of the projector as an "RGB" signal input terminal or as a "YPBPR" (color-difference) signal input terminal. Please reset it based on the connected apparatus. ❊ The input will be "RGB" irrespective of the PC signal setting. Setting value: "RGB", "YPBPR" ["RGB"]
"DIST"	Image of high resolution can be achieved. Set as required. This is turned "ON" when the OPERATE button is pressed. Setting value: "OFF", "ON" ["ON"]
"SCART"	Connects to a Europe-adapted SCART plug and turns it "ON" during component input. Connect the Image Signal cable to the RGB terminal of the PC2 input terminal and the Sync Signal cable to the VIDEO IN terminal. Setting value: "OFF", "ON" ["OFF"]
"RS-232C [bps]"	Sets the communication speed (signal transmission speed) when communicating with a computer by using the RS-232C terminal. Please set the baud rate for transmission. Setting value: 9600,19200 [19200]
"SXGA"	Setting value: 1280,1400 [1280]
"Page 1"	Display "Page 1" of "Options" menu. → Press the ENTER button to go to "Options" menu ("Page 1") screen 9.

12 "Language" menu

Select the language in this language menu with the CURSOR buttons (▲ / ▼).

Setting value : "English", "日本語"(Japanese), "Deutsch" (German), "Espanol" (Spanish), "Italiano" (Italian), "Francais" (French), "Portugues" (Portuguese) and "한국어" (Korean).
["English"]

❊Some words in the menu and proper nouns such as "VIDEO", "NTSC", "QUICK ALIGN..." are shown only in English.

13 "Information" menu

When video input is selected

Adjustment item (press ▲/▼)	Adjustment content (press ◄/►)
"Input"	Displays the image input (VIDEO, Y/C, PC2) when projecting.
"Switcher"	Displays the selected switcher matching the specification of this projector. 0: not being used. 1-10: switcher number. ❊ For details, please check with your au thorized dealer.
"Source"	Displays the type of video signal of the image projected.
"Lamp time"	Displays the accumulated used hours of the light-source lamp.

When PC input is selected

Adjustment item (press ▲/▼)	Adjustment content (press ◄/►)
"Input"	Displays the computer input (PC1, PC2, PC3) when projecting.
"Switcher"	Displays the selected switcher number matching the specification of this projector. 0: not being used. 1-10: switcher number. ❊ For details, please check with your au thorized dealer.
"Resolution"	Displays the resolution of the inputted signal. (Horizontal x vertical) ❊ Some inputted signals cannot be dis played correctly.
"Frequency H"	Displays the horizontal frequency of the inputted signal.
"Frequency V"	Displays the vertical frequency of the inputted signal.
"Lamp time"	Displays the accumulated used hours of the light-source lamp.

When no image signal is inputted

Adjustment item (press ▲/▼)	Adjustment content (press ◄/►)
"Input"	Displays the selected image input (VIDEO, Y/C, PC1, PC2, PC3) when projecting.
"Switcher"	Displays the selected switcher number matching the specification of this projector. 0 : not being used 1-10 : switcher number. ❊ For details, please check with your au thorized dealer.
"Lamp time"	Displays the accumulated used hours of the light-source lamp.

Editing and Projecting Logo

You can project your logo if you like when you start up the projector.
This may come in useful during presentations, etc.

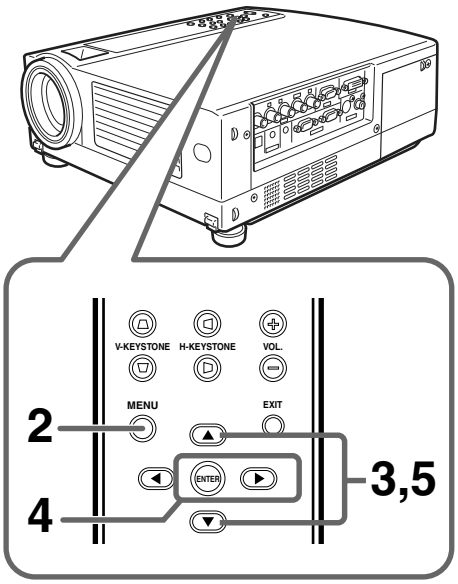

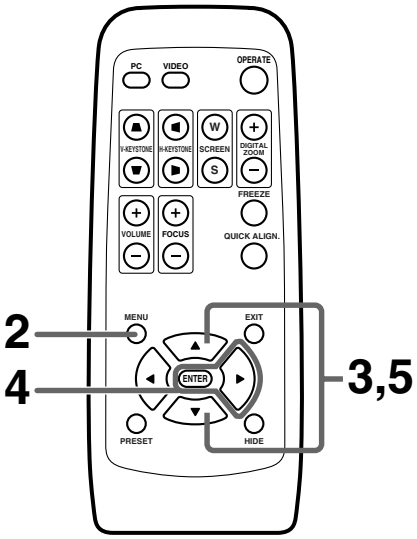

Notes

- Setting the logo display item in the "Logo" menu to "ON" and switching on the power displays the D-ILA logo and then the user-set logo. (Factory setting is "ON")
- When the D-ILA or user-set logo is displayed after the projector is turned on, pressing the EXIT button will delete the logo.
- During video signal input, pressing the EXIT button on the remote control unit when the menu is not displayed causes the logo to appear.
  Press any other button to delete the logo from the screen.

1. Project the images to be included in your logo.

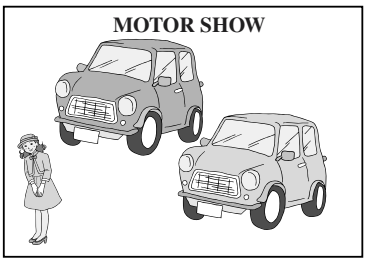

Screen display

2. Press the MENU button.

- The main menu appears on the screen.

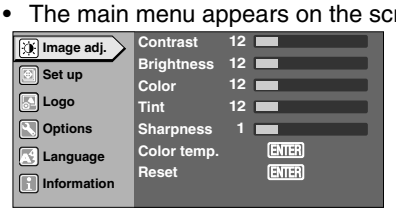

3. Select "Logo" with the CURSOR buttons (▲ / ▼)

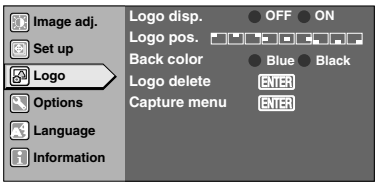

4. Press the ENTER or the right CURSOR button (▶)

- The "Logo" menu appears on the screen.

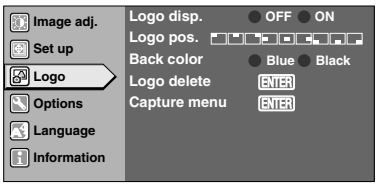

5. Select "Capture menu" with the CURSOR buttons (▲ / ▼), and press ENTER.

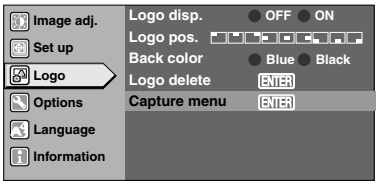

6. The captured picture appears on the screen.

- The captured picture (i.e your logo) with a frame appears on the screen.

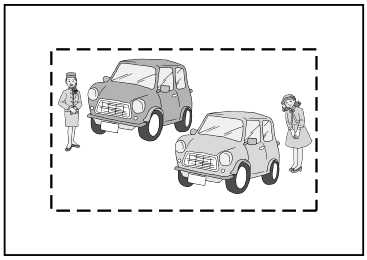

Screen display

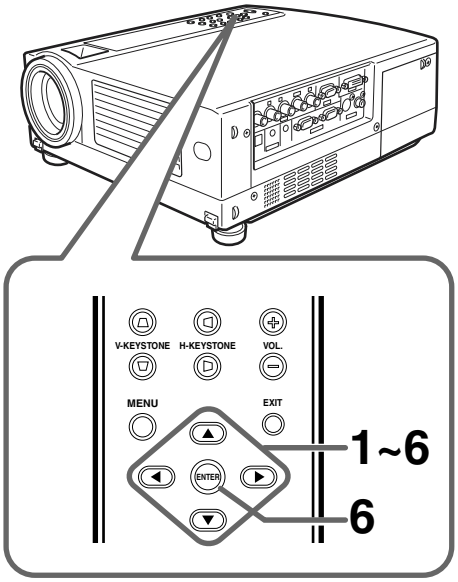

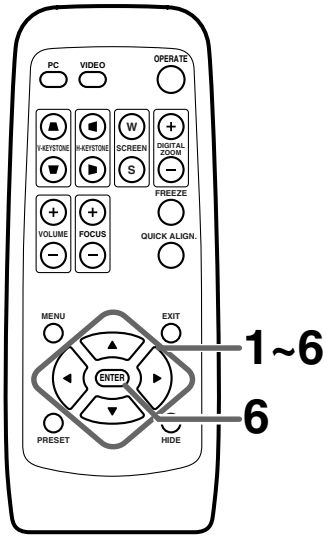

1. Set the menu position as required.

- Select "Menu pos." with the CURSOR buttons (▲ / ▼).
- Move the menu display position with the CURSOR buttons (◀ / ▶) while viewing the projected image.

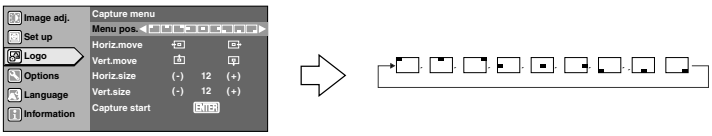

2. Select "Horiz. move" with the CURSOR buttons (▲ / ▼).

- Move the logo left or right with the CURSOR buttons (◀ / ▶) while viewing it on the screen.

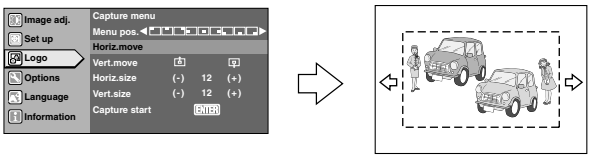

3. Select "Vert. move" with the CURSOR buttons (▲ / ▼).

- Move the logo up or down with the CURSOR buttons (◀ / ▶) while viewing it on the screen.

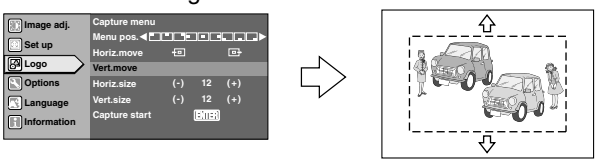

4. Select "Horiz. size" with the CURSOR buttons (▲ / ▼).

- Set the width with the CURSOR buttons (◀ / ▶) while viewing the projected image.

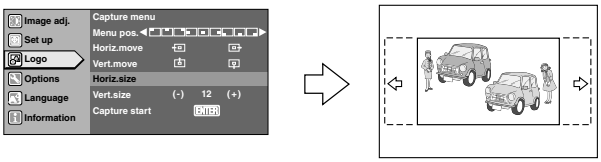

5. Select "Vert. size" with the CURSOR buttons (▲ / ▼).

- Set the height with the CURSOR buttons (◀ / ▶) while viewing the projected image.

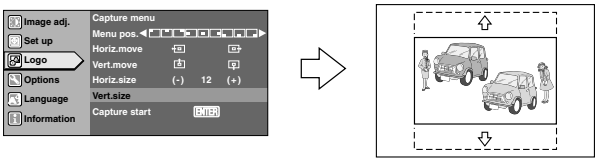

6. Select "Capture start" with the CURSOR buttons (▲ / ▼), and press ENTER.

- Begin to capture the framed image set in the procedures 2 to 5 from the projected image.
- The captured picture wil be taken into memory as a logo in the projector and will be shown during start-up.

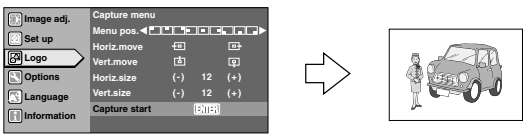

Replacing the Lamp

The light source lamp and its lamp time

The light-source lamp has a service life. The life of the lamp currently used for this projector is about 2000 hours.
[Average lamp life: 2000 hours].
When the light-source lamp approaches the end of its service life, deterioration progresses rapidly. Please replace with a new lamp when the accumulated lamp time exceeds 1900 hours or at least get a replacement lamp ready. Further, depending on the operating conditions, the lamp may have to be changed earlier. If the image remains dark or the tone, unusual, even after adjustment, please exchange the lamp as soon as possible. In addition, you can check the accumulated used hours of the lamp. Please see the "Lamp Time" item on the "Information" menu on page 40.

Please purchase the new lamp unit from the authorized dealer where you purchased the projector.

Exchange lamp Part No.: BHL5006-S

■ When lamp time exceeds 1000 hours:

When the accumulated lamp time reaches 1000, a message indicating "1000 hr" will appear on the projected screen.
* Press any key to delete the message.

■ When lamp time exceeds 1900 hours.

- **When the accumulated lamp time reaches 1900 hours:**
  The LAMP indicator on the projector lights up.
- **When the accumulated lamp time exceeds 1900 hours:**
  "Lamp replacement" appears on the screen.
  * Press any button to delete the message.

■ When the lamp time exceeds 2000 hours:

The lamp indicator on the projector blinks.
"Warning" and "Lamp replacement" appears on the screen; the word "Warning" blinks.

❊ To cancel the message, press the EXIT button. However, the same message will appear again every one-hour.

❊ Once the lamp time exceeds 2000 hours, and the projector is either put on the standby state or turned off, projection will not be possible again until the lamp is replaced and the "Lamp time" is reset. (☞ page 45)

■ When the lamp time exceeds 2010 hours:

The projector is forcibly shut off.
The LAMP and OPERATE indicators blink on the projector.

❊ The projector does not turn on unless the lamp (lamp unit) is replaced and the "Lamp time" is reset. (☞ page 45)

About lamp replacement

- If the projector is set in a constricted place, performance of the replacement work there could cause injury. Move the projector to a place large enough to work on replacing the lamp.
- Use a genuine product for the lamp. If you use one other than a genuine product, this could cause a malfunction. Also, never use an old lamp. This could cause marked performance deterioration or lamp blow-out leading to projector malfunction. Further, the broken pieces of glass from the lamp may cause injuries.
- Do not replace the lamp immediately after the projector has been used. The temperature of the lamp unit is still high and could cause a burn. Allow a cooling period of one hour or more before replacement.
- Before embarking on the lamp replacement work, disconnect the power cord from the wall outlet while the STAND BY indicator is on. If you perform the replacement work with the power cord connected, this could cause injury or electric shock.

The procedure for lamp replacement

1. Loosen the screws and detach the light-source lamp cover.

Loosen the two screws with a ⊕ screwdriver.

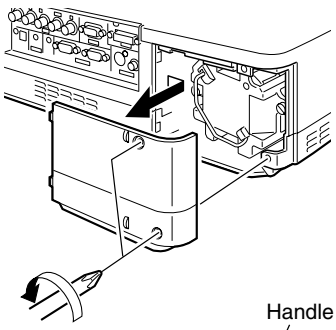

2. Loosen the screws and lift up the handle.

Loosen the two screws with a ⊕ screwdriver.

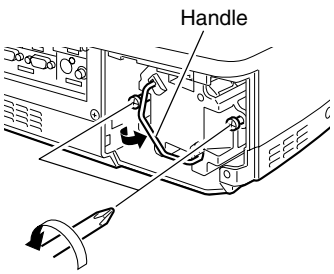

3. Remove the lamp unit.

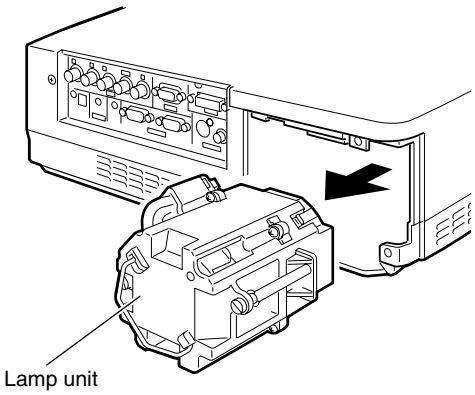

4. Insert the new lamp unit fully in.

> **Caution**
> Neither touch the glass surface of the lamp directly with your hand nor stain it. If you touch it with a bare hand, oil and other substances on your hand may adhere to the lamp, possibly preventing it from performing as specified and therefore leading to a shortened lamp life, a darkened screen, etc.

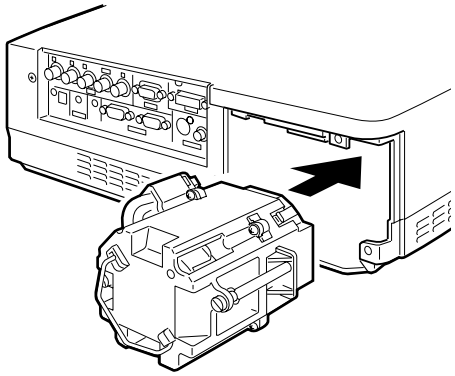

5. Close the handle, and tighten the screw.

Tighten the two screws with a ⊕ screwdriver.

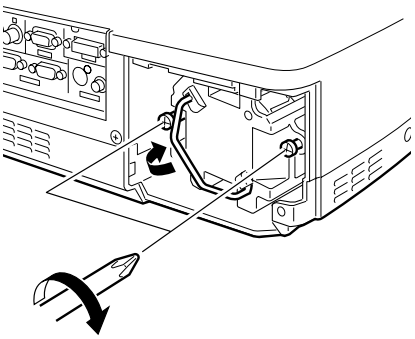

6. Attach the light-source lamp cover and tighten the screw.

Tighten the two screws with a ⊕ screwdriver.

> **Note**
> When closing the lamp cover, please insert the left side (with the two claws) in first and then ensure that the protruding part found on the reverse side of the cover fits snugly into the hole of the main unit. As this protrusion acts as a switch, misfitting leads to power not being able to flow in.

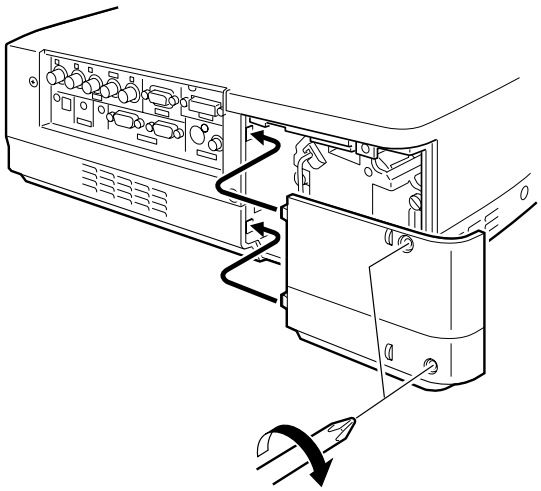

Resetting the lamp time

After replacing with a new lamp, reset the “Lamp time” counter inside the projector. When this is done, a new count will start.
If the display of the accumulated lamp time reaches 2000 hours, the projector does not work (lamp does not light up) unless the lamp time is reset.

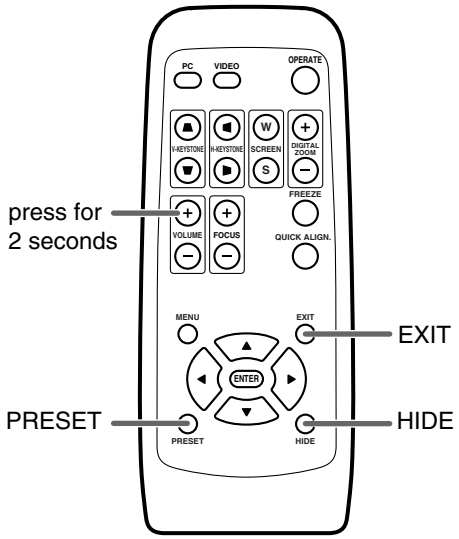

1. Insert the main plug. The projector will go into the stand by mode.

ON: STAND BY indicator lights up.

2. Press the EXIT, HIDE, PRESET buttons on the remote control sequentially, then press VOL ⊕ for 2 seconds or more.

The STAND BY and OPERATE indicators alternately blink about every approx.3 seconds. After blinking stops, “Lamp time” resets and the projector returns to the stand-by state (STAND BY indicator lights up).

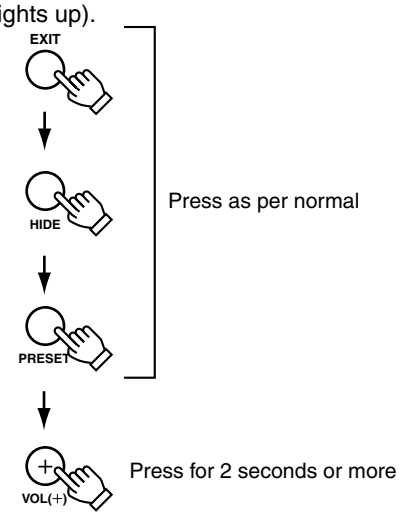

To ensure resetting of the lamp time

The Lamp time can be checked on the “Lamp time” item in the “Information” menu. (☞ page 32, 33, 34, 40)

Caution for reset work

Reset the “Lamp time” only when you have replaced with a new lamp. Never reset it while the lamp is still in use, otherwise the approximate standard for gauging replacement time may be unclear; lamp performance may suffer and lamp blow-out may also occur.

Cleaning and Replacing the Filter

Clean the filter regularly or it may not work satisfactorily, causing damage. If the filter is extremely dirty and cannot be cleaned, or if it is damaged, replace the filter with a new one (Lower filter: LC32087-001/ Inner filter:LC32058-001). Otherwise, dirt may get inside and appear on the screen, preventing you from enjoying the video fully. If dirt has gotten in or if you need information about the filter, please consult the authorized dealer where you purchased the projector.

❊The air inlet filter on the right side cannot be removed. Please clean this filter regularly using eg, a vacuum cleaner.

1. Pull out the power cord from the wall outlet.

After the projector goes into the stand-by state with the STAND BY indicator on, pull out the power cord from the wall outlet.

2. Remove the filter.

- **When removing the lower filter:**
  Withdraw the lower filter backwards along the rail in the direction of the arrow.
- **When removing the inner filter:**
  Push the claw at the base of the inner filter in the upward direction and draw the filter out.

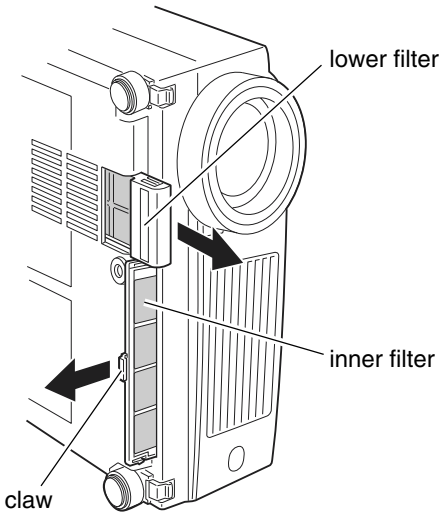

3. Clean the filter.

Clean the filter with water and dry it, avoiding direct sunlight. In extremely soiled cases, use of a neutral detergent is recommended.

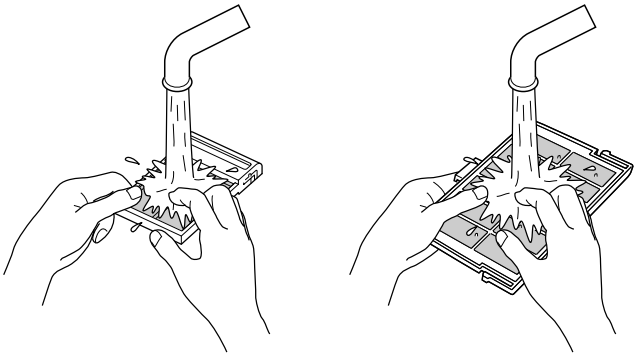

- Put on rubber gloves when using a neutral detergent.
- After you washed the filter in water, make sure that the filter is completely dry before reinstalling, otherwise electric shock or malfunction could occur.
- Do not clean this filter using a vacuum cleaner. Since the filter is soft, it may be sucked into the vacuum cleaner or be damaged by it.

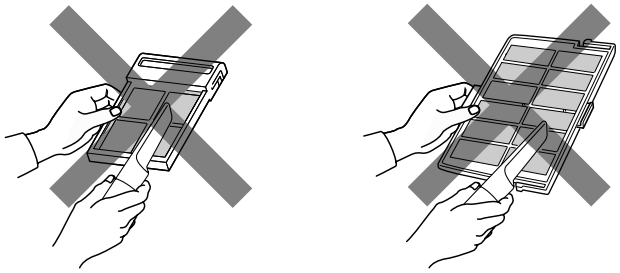

4. Reinstalling the filter.

- **When reinstalling the lower filter:**
  Reinstall the lower filter by inserting it into the projector.
- **When reinstalling the inner filter:**
  Install the filter after engaging the two claws of the inner filter to the projector.

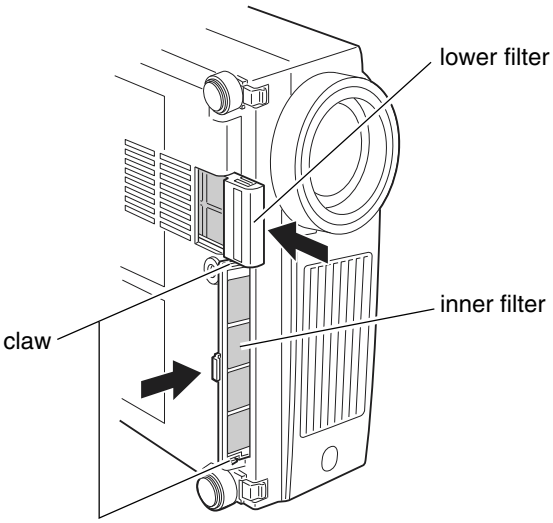

Troubleshooting

Before consulting your authorized dealer, please check the following points.

Symptom	Probable cause	Corrective action	Page
Power is not supplied.	Is the power cord disconnected?	Insert the power cord (plug) firmly.	24
	Is the light-source lamp cover closed correctly?	After the projector goes into the stand-by state with the STAND BY indicator on, unplug from the main power outlet, close the light-source lamp cover correctly and plug on again.	25, 27, 44
	Is the filter inserted correctly?	After the projector goes into the stand-by state with the STAND BY indicator on, unplug from the main power outlet, insert the filter properly and plug on again.	25, 27, 46
	Has the lamp life expired? (Has the lamp time reached 2000 hours?)	After the projector goes into the stand-by state with the STAND BY indicator on, unplug from the main power outlet, replace with a new light-source lamp and plug on again. Reset the “Lamp time” after replacing with a new lamp.	25, 27, 43, 44, 45
Light is not emitted, or light is dim.	Is the lens cap removed?	Remove the lens cap.	24
	Is the lamp near exhaustion?	Check the “Lamp time” on the menu, and if the lamp is near exhaustion, get ready a new lamp or replace it then.	43, 44, 45
With power on, the projector works but stops abruptly in a few minutes.	Is the air inlet or exhaust vent area blocked?	After the projector goes into the stand-by state with the STAND BY indicator on, unplug from the main power outlet, remove any blocking object and plug on again.	7, 8, 15, 25, 27
	Is the filter dirty?	Clean filter.	46
Video image does not appear, or audio sound does not occur.	Is the correct input terminal selected?	Select the correct input with the VIDEO and PC buttons.	25, 26
	Are devices connected correctly?	Connect devices correctly.	21, 22
	Are signals being supplied from the connected devices?	Set connected devices correctly.	———
	Are input signals (scanning frequency, etc.) appropriate?	Check if the signal is appropriate (scanning frequency, etc.) and input the appropriate signal.	19, 20
	Is “Brightness” adjusted correctly?	Adjust “Brightness” on the menu.	35
	Is volume set at minimum?	Adjust volume with the VOLUME +/- buttons.	27
	Are video and audio turned off by pressing the HIDE button?	Press the HIDE button to turn video and audio on.	29

Symptom	Probable cause	Corrective action	Page
Video image is fuzzy.	Is focus adjusted correctly?	Adjust focus with the focus ring of the lens.	26
	Is the projector placed too near or too far from the screen?	Set the projector at the correct distance.	17
	Are “Tracking” and “Phase” adjusted correctly?	Adjust “Tracking” and “Phase” on the menu.	37
Video image is abnormally dark or bright.	Is “Brightness” adjusted correctly?	Adjust “Brightness” on the menu.	37
Color is poor or unstable.	Is picture quality (color, density, etc.) adjusted correctly?	Adjust picture quality on the menu.	37
	Is the correct “Decoder” selected?	Set the “Decoder” to “AUTO” or the correct dedicated decoder. If the problem is not rectified after setting to “AUTO”, set to forced dedicated mode.	38
	Are signals (scanning frequency, etc.) from the connected device appropriate?	Check if the signal is appropriate (scanning frequency, etc.), and input the appropriate signal.	19, 20
	Is the PC2 input terminal being used?	When the PC2 input terminal is being used, “PC 2(BNC)” must be selected from the “Options” menu. Set it correctly according to the input signal.	39
The upper part of the video image bows or distorts.	While computer signals are input, are sync signals for composite sync (Cs) or G on sync being inputted?	Input separate sync signals for vertical sync (V) and horizontal sync (H) signals.	19, 20
	Are signals with much jitter or skew distortion being input from a video deck?	Input signals with little jitter or skew distortion. Use a TBC or a device with a built-in TBC.	———
Remote control unit does not work.	Are batteries installed correctly?	Match the polarities of batteries correctly, as shown on the battery cartridge.	14
	Are batteries exhausted?	Replace with new batteries.	14
	Is there an obstructive object between the remote control unit and the remote sensor?	Remove any shielding objects.	18
	Is the remote control held too far from the sensor?	Use the remote control unit at a nearer point.	18

• This projector uses a micro computer. External noise may cause it to malfunction. If this happens, unplug from the main power outlet and then plug on again. (☞ page 25, 27)

What to do when these messages are displayed

Message	Cause (Contents)
PC 1 No Input	No device is connected to the input terminal. The terminal is connected but no signal is output from the connected device. • The selected input mode (input terminal) name is shown above the message. → Please input the image signal.
PC 1 Frequency of input signal is out of range.	The frequency of the input video signal is out of range. → Please input the video signals of which frequency is within the projector's specifications.

Message	Cause (Contents)
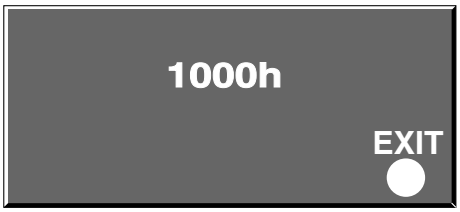	When the “Lamp time” reaches 1000 hours → A message indicating “1000 h” appears on the projected screen. • Press any key to delete the message.
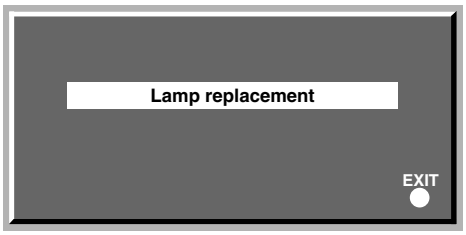	Every time the projector is turned on, this message appears on the screen when the accumulated lamp time reaches between 1900 hours to 2000 hours. → Press any button to delete the message. Get ready a new light-source lamp or replace the light-source lamp at this point.
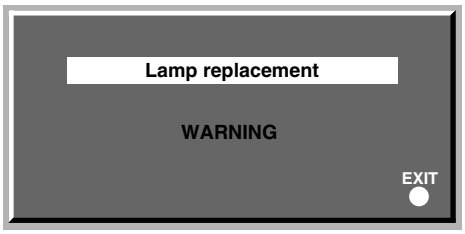	The word “Warning” appears and blinks when the accumulated lamp time reaches 2000 hours. The message can be cleared by pressing the EXIT button. However, the same message will appear again every one-hour. Once the projector is turned off, it does not turn on again if the accumulated lamp time has exceeded 2000 hours. When the accumulated lamp time reaches 2010 hours, the projector is forcibly shut off and cannot be turned on again. → Replace the light-source lamp and reset the “Lamp time”. (☞ page 43, 45)

Note

The message display language corresponds to the menu language setting. This is set to “English” when the projector is bought. The display language can be selected from 8 languages. (☞ page 39)
However, the input mode (PC 1,PC 2, PC 3, Y/C, VIDEO) and button indications (FREEZE, D.ZOOM, EXIT) are only displayed in English irrespective of the display language setting.

Warning Indication

■ About warning indicators

If something abnormal has occurred in the projector, the warning mode sets on and the abnormality will be indicated by a combination of indicators displayed on the control panel as shown in the following table.
Then, the projector automatically stops projection and runs the cooling fan for about 90 seconds.

No.	Indicator				Warning
	LAMP	TEMP	STAND BY	OPERATE	
1	Blink		Blink		The light-source lamp does not light up and projection cannot be done.
2	Blink ← Blink simultaneously → Blink				The light-source lamp suddenly goes off during projection.
3	Blink	Blink			Circuit operation is abnormal
4	Blink ← Blink alternately → Blink				The light-source lamp is misfitted.
5		Blink			The internal temperature is abnormally high.
6		Blink	Blink		The temperature at the air inlets has risen abnormally high.
7	Blink	Blink	Blink	Blink	The cooling fan has stopped. (Fan locked)

* For details on individually blinking indicators, please see page 43.

■ Action to be taken upon warning indications

Please follow the procedures below.

For No.1-3

No.1 : Unplug from the main power outlet and restart according to the basic operation procedures.
No.2 : After checking if a shock (such as from knocking) has not ocurred during operation, unplug from the main power outlet and restart according to the basic operation procedures.
No.3 : Unplug from the main power outlet and restart according to the basic operation procedures.

For No.4-7

After the STAND BY indicator lights up, pull out the power cord and check the following items one-by one.
No.4 : Set the lamp unit in place. Restart according to the basic operation procedures.
No.5 : Check that nothing is blocking the air inlets, and wait until the inside cools down. Restart according to the basic operation procedures.
No.6 : Check the ambient temperature. If it is normal, leave the projector until it cools down. Restart according to the basic operation procedures.
No.7 : Leave the projector until it cools down. Restart according to the basic operation procedures.

If the same warning indication is observed again, after the cooling fan has stopped, ensure the projector goes into the stand-by state with the STAND BY indicator on, unplug the power cord, and call your dealer for repair.

Specifications

■ Model name/Article name		DLA-SX21U/E DLA-SX21SU/SE D-ILA multimedia projector
■ Emission method		D-ILA®* (Reflective Active Matrix Principle)
■ Display panel/ size		D-ILA /0.7 (1400pixels x 1050pixels) x 3 (Total number of pixels: 4,410,000)
■ Projecting lens		x 1.3 zoom lens (2.1: ~2.6:1) (DLA-SX21U/E) (Manual zooming and focusing) 1 : 1 fixed lens (DLA-SX21SU/SE) (Auto focusing)
■ Light-source lamp		250W Ultra High Pressure Mercury lamp [Part No.: BHL5006-S/Rating: 250W]
■ Screen size		DLA-SX21U/E : 40 ~ 200 /DLA-SX21SU/SE: 40 ~ 100 [recommended] (with aspect ratio: 4:3)
■ Projection distance		DLA-SX21U/E : Approx. 1.6m ~ 12m/DLA-SX21SU/SE: Approx. 7.8m~19.9m
■ Color system		NTSC, NTSC4.43, PAL, SECAM (Automatic switching/manual switching)
■ Resolution		1400 dots x 1050 dots (S-XGA full resolution, during RGB input) 1000 TV lines (Horizontal resolution, aspect ratio 4:3, during video input)
■ Scanning frequency		Horizontal frequency : 15kHz~120kHz Vertical frequency : 50Hz~120Hz Please do not fail to see frequency correspondence table on page 21.
■ Audio		Power output: 1W (monaural), 4cm round type micro-speaker x 1
■ Input terminals	VIDEO IN	Y/C 1-line, mini DIN 4 pin x 1 Y: 1.0 Vp-p, 75ohm C:0. 286 Vp-p, 75ohm(NTSC), 0.3Vp-p, 75ohm(PAL) VIDEO 1-line, RCA pin x 1 1.0V(p-p),75ohm,synchronised
	PC 1	1-line, D-sub 3-rows 15 pin x 1
	PC 2	1-line, BNC x 5 Y, CB,CR : Component (Y, B-Y, R-Y) signal (Color Difference signal) Y, PB, PR : DTV-format (Y, P_B, P_R) signal R, G, B : Analog RGB signal H/Cs, V : Horizontal (H) sync/composite (Cs) sync, Vertical (V) sync signal
	PC3	1-line, DVI-D (single-24pin) terminal
	AUDIO	1-line, RCApin X 1 (Y/C, VIDEO, PC1, PC2, PC3) 0.5V(rms), high impedance
	CONTROL	RS-232C : 1-line, D-sub 9pin x1 (External controller) REMOTE : 1-line, stereo mini-jack x1 (remote control)
■ Output terminals		DC OUT 5V, 1.5A DC Power Jack
■ Power requirements		AC 100V ~ 240V AC, 50Hz/ 60Hz
■ Power consumption		3.4 A (100V AC) ~ 1.42A (240V AC)
■ Operation environment		Temperature: 41°F ~ 95°F (+5°C ~ +35°C) Humidity: 20% ~ 80% (no condensation.) (Preservation temperature 14°F ~ 140°F (–10°C ~ +60°C))
■ Dimensions (Width x Height x Length)		Approx. 12 1/10" x approx. 5 3/8" x approx. 14 1/2" (Approx. 307mm x 136mm x 368mm) (Excluding handle, foot, lens and protrusion portion)
■ Mass		Approx. 13.0lbs (Approx. 5.9Kg) (DLA-SX21U/E): Approx. 13.9lbs (Approx. 6.3Kg) (DLA-SX21SU/SE)
■ Accessories		(☞ page 6)

- D-ILA® is the abbreviation for Direct drive Image Light Amplifier.
- Design and Specifications are subject to change without notice.
- D-ILA® devices are manufactured with a very high-precision technology. Pixel effectiveness is 99.99%. Only 0.01% or less of the pixels would either not light up or remain permanently lighted up.
- For easy understanding, pictures and illustrations may be emphasized, composed or have omissions and may be more or less different from the actual products.
- All brand names and products (IBM, Macintosh) herein are the trademarks or registered trademarks of their respective companies.
- This product conforms to the 'Household electric appliances and general-purpose articles harmonics control measure guideline.'

Dimensions (unit: mm)

■ Top

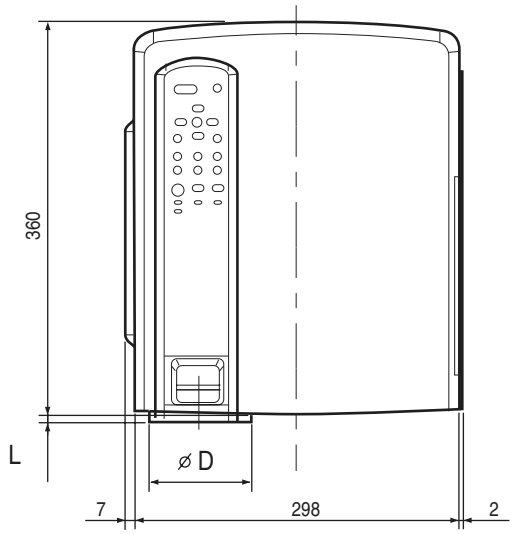

■ Bottom

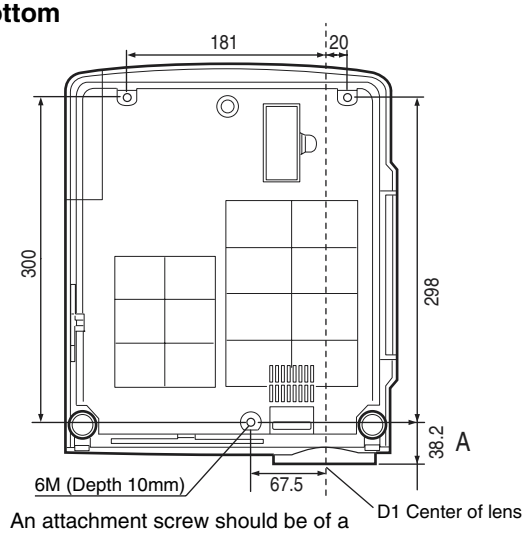

■ Front

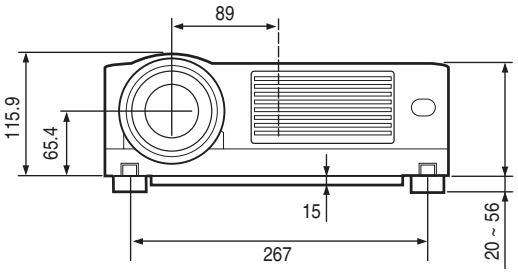

■ Side

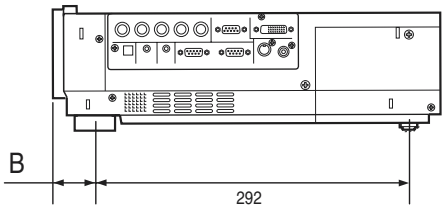

Model Name	L	D	A	B
DLA-SX21U/E	8.2	ϕ92.5	38.2	36.2
DLA-SX21SU/SE	11.0	ϕ79.2	41.0	39.0

Pin arrangement

■ Y/C terminal

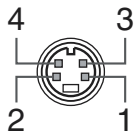

Pin number	Signal name
1	GND (Y)
2	GND (C)
3	Y
4	C

■ RS-232C IN/OUT terminal

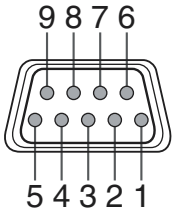

Pin number	Signal name	Pin number	Signal name
1	N/C	6	N/C
2	RD	7	N/C
3	TD	8	N/C
4	N/C	9	N/C
5	GND		

■ PC 1 terminal

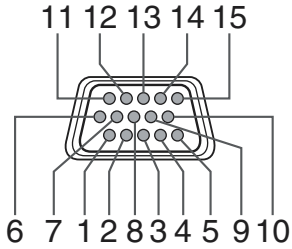

Pin number	Signal name	Pin number	Signal name
1	Red	9	N/C
2	Green	10	GND (SYNC)
3	Blue	11	GND
4	N/C	12	N/C
5	N/C	13	H.SYNC
6	GND (Red)	14	V.SYNC
7	GND (Green)	15	N/C
8	GND (Blue)		

■ PC 3 terminal

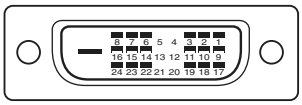

Pin number	Signal name	Pin number	Signal name
1	TMDS data 2 -	13	N/C
2	TMDS data 2 +	14	TMDS +5V power supply
3	TMDS data 2 /4 shield	15	Earth (+5V)
4	N/C	16	Hot plug detection
5	N/C	17	TMDS data 0 -
6	DDC clock	18	TMDS data 0+
7	DDC data	19	TMDS data 0/5 shield
8	N/C	20	N/C
9	TMDS data 1 -	21	N/C
10	TMDS data 1 +	22	TMDS clock shield
11	TMDS data 1/3 shield	23	TMDS clock +
12	N/C	24	TMDS clock -

TMDS = Transition Minimized Differential Signaling
DDC = Display Data Channel

■ RS-232C external control

By connecting a computer to the projector with a RS-232C cross cable (D-sub 9 pins), you can control the projector with the computer. The commands to control the projector and the response data format against the received commands are explained here.
For details, please consult the authorized dealer where you purchased your projector.

1. Communication Specifications

The communication specifications are as follows.

Baud rate	9600bps/19200bps
Data length	8 bits
Parity	None
Stop bit	1 bit
Flow control	None

2. Command Format

2-1 Command data format

When sending a control command to the projector, use the following data format.

Header **ID** **SP** **Command** [**SP** **Parameter**] **CR**

Header	: Designates the head of data and the data type.
	: '!' (21h): Assigns command to the projector
	: '?' (3Fh): Query to the projector (Asking command)
ID	: '1': The identification number of the projector. (Manufacturer set value '1')
SP	: Designates the delimiter for ID, Command, and Parameter. (20h)
CR	: Designates the terminal of the data. (0Dh)

* [ ] is not necessary for Asking command.

2-2 Response data format

Upon executing the received control command, the projector sends back the following response data to the computer.

Header **ID** **SP** **Normal Termination Status** [**SP** **Parameter**] **CR**

Header	: Designates the head of data.
	: '@' (40h): Fetches data from the projector.
ID	: '1': The identification number of the projector. (Manufacturer set value"1")
SP	: Designates the delimiter for ID, Command, and Parameter. (20h)
Normal Termination Status	: '0' (30h)
CR	: Designates the terminal of the data. (0Dh)

2-3 Parameters used for the data format

The following three kinds of parameters are used for control commands and response data.

1) Numeric value
2) ON/OFF
3) Special parameters

Each parameter is as follows:

1) Numeric value
A 2-byte hexadecimal value (sign included) is represented by a set of 4 digit (4 bytes) characters.
Designated range: '8000' to '7FFF'.

2) ON/OFF
Shows the status (ON/OFF) of the projector, such as POWER and HIDE.

Character	Hex.	Meaning
'0'	30	OFF
'1'	31	ON

3) Special parameters
Input switching parameters

Character	Hex.	Meaning
‘0’	30	Y/C
‘1’	31	VIDEO
‘3’	33	PC1
‘4’	34	PC2
‘5’	35	PC3

Operation mode parameters

Character	Hex.	Meaning
‘0000’	30h 30h 30h 30h	Stand-by mode
‘0001’	30h 30h 30h 30h	Power-on mode
‘0002’	30h 30h 30h 30h	Cool-down mode
‘0004’	30h 30h 30h 30h	Emergency mode

3. External control command table

Function	Command	Asking		Data type		
		Power on	ELSE	Numeric Value	ON/OFF	Special Data
OPERATE	U0F	X	X	X	○	X
HIDE	U00	○	X	X	○	X
Right Left reversal	U17	○	X	X	○	X
Top Bottom inversion	U18	○	X	X	○	X
Input switch	U1A	○	X	X	X	Y/C ...
Operation mode	Z03	○	○	X	X	Stand-by…

Operation mode: Only Asking command is possible

Memo

DLA-SX21U/DLA-SX21E
DLA-SX21SU/DLA-SX21SE

D-ILA® MULTIMEDIA PROJECTOR

JVC®

VICTOR COMPANY OF JAPAN, LIMITED

© 2002 VICTOR COMPANY OF JAPAN, LIMITED

Printed in Japan
0802-SW-VP