JVC®

D-ILA® HOME THEATER PROJECTOR

DLA-HD2KU/DLA-HD2KE INSTRUCTIONS

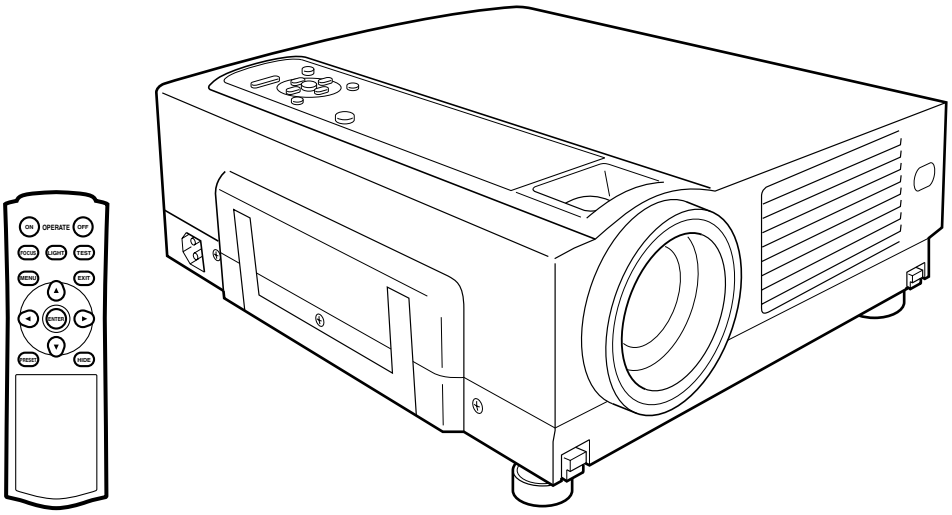

For Customer Use:
Enter below the Serial No. which is located on the side panel of the cabinet. Retain this information for future reference.

Model No. DLA-HD2KU

Serial No.

LCT1719-001A

IMPORTANT INFORMATION

NOTICE (For USA)

Language for Manuals of Products using HID Lamps (that contains mercury)

This product has a High Intensity Discharge (HID) lamp that contains a small amount of mercury. It also contains lead in some components.
Disposal of these materials may be regulated in your community due to environmental considerations. For disposal or recycling information please contact your local authorities, or the Electronics Industries Alliance: http://www.eiae.org.

WARNING:

TO PREVENT FIRE OR SHOCK HAZARDS, DO NOT EXPOSE THIS APPLIANCE TO RAIN OR MOISTURE.

WARNING:

THIS APPARATUS MUST BE EARTHED.

CAUTION:

To reduce the risk of electric shock, do not remove cover. Refer servicing to qualified service personnel.

This projector is equipped with a 3-blade grounding type plug to satisfy FCC rule. If you are unable to insert the plug into the outlet, contact your electrician.

FCC INFORMATION (U.S.A. only)

CAUTION:

Changes or modification not approved by JVC could void the user's authority to operate the equipment.

NOTE:

This equipment has been tested and found to comply with the limits for Class B digital devices, pursuant to Part 15 of the FCC Rules. These limits are designed to provide reasonable protection against harmful interference in a residential installation. This equipment generates, uses, and can radiate radio frequency energy and, if not installed and used in accordance with the instructions, may cause harmful interference to radio communications. However, there is no guarantee that interference will not occur in a particular installation. If this equipment does cause harmful interference to radio or television reception, which can be determined by turning the equipment off and on, the user is encourage to try to correct the interference by one or more of the following measures:

- Reorient or relocate the receiving antenna.
- Increase the separation between the equipment and receiver.
- Connect the equipment into an outlet on a circuit different from that to which the receiver is connected.
- Consult the dealer or an experienced radio/TV technician for help.

MACHINE NOISE INFORMATION (Germany only)

Changes Machine Noise Information Ordinance 3.
GSGV, January 18, 1991: The sound pressure level at the operator position is equal or less than 70 dB (A) according to ISO 7779.

About burning-in of the D-ILA device

Do not allow the same still picture to be projected for a long time or an abnormally bright video picture to be projected.
Do not project video images with high-intensity or high contrast
on a screen. The video image could be burnt into the D-ILA device.
Use special care when projecting video games or computer program images. There is no problem with ordinary video-cassette playback images.

About the installation place

Do not install the projector in a place that cannot support its weight securely.
If the installation place is not sturdy enough, the projector could fall or overturn, possibly causing personal injury.

IMPORTANT SAFEGUARDS

Electrical energy can perform many useful functions. This unit has been engineered and manufactured to assure your personal safety. But **IMPROPER USE CAN RESULT IN POTENTIAL ELECTRICAL SHOCK OR FIRE HAZARD**. In order not to defeat the safeguards incorporated into this product, observe the following basic rules for its installation, use and service. Please read these Important Safeguards carefully before use.

– All the safety and operating instructions should be read before the product is operated.
– The safety and operating instructions should be retained for future reference.
– All warnings on the product and in the operating instructions should be adhered to.
– All operating instructions should be followed.
– Place the projector near a wall outlet where the plug can be easily unplugged.
– Unplug this product from the wall outlet before cleaning. Do not use liquid cleaners or aerosol cleaners. Use a damp cloth for cleaning.
– Do not use attachments not recommended by the product manufacturer as they may be hazardous.
– Do not use this product near water. Do not use immediately after moving from a low temperature to high temperature, as this causes condensation, which may result in fire, electric shock, or other hazards.
– Do not place this product on an unstable cart, stand, or table. The product may fall, causing serious injury to a child or adult, and serious damage to the product. The product should be mounted according to the manufacturer's instructions, and should use a mount recommended by the manufacturer.
– When the product is used on a cart, care should be taken to avoid quick stops, excessive force, and uneven surfaces which may cause the product and cart to overturn, damaging equipment or causing possible injury to the operator.

PORTABLE CART WARNING
(symbol provided by RETAC)

S3126A

– Slots and openings in the cabinet are provided for ventilation. These ensure reliable operation of the product and protect it from overheating. These openings must not be blocked or covered. (The openings should never be blocked by placing the product on bed, sofa, rug, or similar surface. It should not be placed in a built-in installation such as a bookcase or rack unless proper ventilation is provided and the manufacturer's instructions have been adhered to.)
  For proper ventilation, separate the product from other equipment, which may prevent ventilation and keep a distance of more than 11-7/8" (30 cm).
– This product should be operated only with the type of power source indicated on the label. If you are not sure of the type of power supply to your home, consult your product dealer or local power company.
– This product is equipped with a three-wire plug. This plug will fit only into a grounded power outlet. If you are unable to insert the plug into the outlet, contact your electrician to install the proper outlet. Do not defeat the safety purpose of the grounded plug.
– Power-supply cords should be routed so that they are not likely to be walked on or pinched by items placed upon or against them. Pay particular attention to cords at doors, plugs, receptacles, and the point where they exit from the product.
– For added protection of this product during a lightning storm, or when it is left unattended and unused for long periods of time, unplug it from the wall outlet and disconnect the cable system. This will prevent damage to the product due to lightning and power line surges.
– Do not overload wall outlets, extension cords, or convenience receptacles on other equipment as this can result in a risk of fire or electric shock.
– Never push objects of any kind into this product through openings as they may touch dangerous voltage points or short out parts that could result in a fire or electric shock. Never spill liquid of any kind on the product.
– Do not attempt to service this product yourself as opening or removing covers may expose you to dangerous voltages and other hazards. Refer all service to qualified service personnel.
– Unplug this product from the wall outlet and refer service to qualified service personnel under the following conditions:
  a) When the power supply cord or plug is damaged.
  b) If liquid has been spilled, or objects have fallen on the product.
  c) If the product has been exposed to rain or water.
  d) If the product does not operate normally by following the operating instructions. Adjust only those controls that are covered by the Operation Manual, as an improper adjustment of controls may result in damage and will often require extensive work by a qualified technician to restore the product to normal operation.
  e) If the product has been dropped or damaged in any way.
  f) When the product exhibits a distinct change in performance - this indicates a need for service.
– When replacement parts are required, be sure the service technician has used replacement parts specified by the manufacturer or with same characteristics as the original part. Unauthorized substitutions may result in fire, electric shock, or other hazards.
– Upon completion of any service or repairs to this product, ask the service technician to perform safety checks to determine that the product is in proper operating condition.
– The product should be placed more than one foot away from heat sources such as radiators, heat registers, stoves, and other products (including amplifiers) that produce heat.
– When connecting other products such as VCR's, and personal computers, you should turn off the power of this product for protection against electric shock.
– Do not place combustibles behind the cooling fan. For example, cloth, paper, matches, aerosol cans or gas lighters that present special hazards when over heated.
– Do not look into the projection lens while the illumination lamp is turned on. Exposure of your eyes to the strong light can result in impaired eyesight.
– Do not look into the inside of this unit through vents (ventilation holes), etc. Do not look at the illumination lamp directly by opening the cabinet while the illumination lamp is turned on. The illumination lamp also contains ultraviolet rays and the light is so powerful that your eyesight can be impaired.
– Do not drop, hit, or damage the light-source lamp (lamp unit) in any way. It may cause the light-source lamp to break and lead to injuries. Do not use a damaged light source lamp. If the light-source lamp is broken, ask your dealer to repair it. Fragments from a broken light-source lamp may cause injuries.
– The light-source lamp used in this projector is a high pressure mercury lamp. Be careful when disposing of the light-source lamp. If anything is unclear, please consult your dealer.
– Do not ceiling-mount the projector to a place which tends to vibrate; otherwise, the attaching fixture of the projector could be broken by the vibration, possibly causing it to fall or overturn, which could lead to personal injury.
– Use only the accessory cord designed for this product to prevent shock.
  The power supply voltage rating of this product is AC 120 V, AC 100 V– AC 240 V, the power cord attached conforms to the following power supply voltage. Use only the power cord designated by our dealer to ensure Safety and EMC.
  When it is used by other power supply voltage, power cable must be changed.
  Ensure that the power cable used for the projector is the correct type for the AC outlet in your country.
  Consult your product dealer.

Power cord

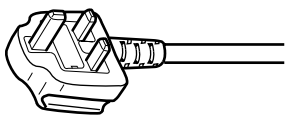

For United Kingdom

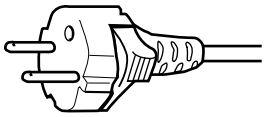

For European continent countries

Power cord

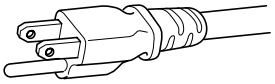

Power supply voltage: AC 120 V

***DO NOT allow any unqualified person to install the unit.**

Be sure to ask your dealer to install the unit (e.g. attaching it to the ceiling) since special technical knowledge and skills are required for installation.
If installation is performed by an unqualified person, it may cause personal injury or electrical shock.

POWER CONNECTION

WARNING:

Do not cut off the main plug from this equipment.
If the plug fitted is not suitable for the power points in your home or the cable is too short to reach a power point, then obtain an appropriate safety approved extension lead or adapter or consult your dealer.
If nonetheless the mains plug is cut off, remove the fuse and dispose of the plug immediately, to avoid a possible shock hazard by inadvertent connection to the main supply.
If a new main plug has to be fitted, then follow the instruction given below:

WARNING:

THIS APPARATUS MUST BE EARTHED. IMPORTANT:
The wires in the mains lead on this product are colored in accordance with the following cord:

Green-and-yellow : Earth
Blue : Neutral
Brown : Live

As these colors may not correspond with the colored making identifying the terminals in your plug, proceed as follows:
The wire which is colored green-and-yellow must be connected to the terminal which is marked ⏚ with the letter E or the safety earth or colored green or green-and-yellow.
The wire which is colored blue must be connected to the terminal which is marked with the letter N or colored black.
The wire which is colored brown must be connected to the terminal which is marked with the letter L or colored red.
When replacing the fuse, be sure to use only a correctly rated approved type, re-fit the fuse cover.

IF IN DOUBT —— CONSULT A COMPETENT ELECTRICIAN.

How To Replace The Fuse

Open the fuse compartment with the blade screwdriver, and replace the fuse.
(* An example is shown in the illustration below.)

POWER CONNECTION (United Kingdom only)

WARNING:

Do not cut off the main plug from this equipment.

If the plug fitted is not suitable for the power points in your home or the cable is too short to reach a power point, then obtain an appropriate safety approved extension lead or adapter or consult your dealer.

If nonetheless the mains plug is cut off, remove the fuse and dispose of the plug immediately, to avoid a possible shock hazard by inadvertent connection to the main supply.

If a new main plug has to be fitted, then follow the instruction given below:

WARNING:

THIS APPARATUS MUST BE EARTHED.

IMPORTANT:

The wires in the mains lead on this product are coloured in accordance with the following cord:

Green-and-yellow : Earth
Blue : Neutral
Brown : Live

As these colours may not correspond with the coloured making identifying the terminals in your plug, proceed as follows:

The wire which is coloured green-and-yellow must be connected to the terminal which is marked ⏚ with the letter E or the safety earth or coloured green or green-and-yellow.

The wire which is coloured blue must be connected to the terminal which is marked with the letter N or coloured black.

The wire which is coloured brown must be connected to the terminal which is marked with the letter L or coloured red.

When replacing the fuse, be sure to use only a correctly rated approved type, re-fit the fuse cover.

IF IN DOUBT —— CONSULT A COMPETENT ELECTRICIAN.

How To Replace The Fuse

Open the fuse compartment with the blade screwdriver, and replace the fuse.
(* An example is shown in the illustration below.)

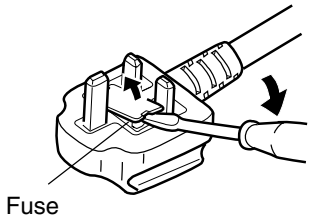

Caution

About Burning-in of D-ILA Device

- **Do not allow the same still picture to be projected for a long time or an abnormally bright video image to be projected.**
  Do not project video images with a high intensity or high contrast on a screen. This video image could be burnt into this D-ILA device.
  Pay special attention when projecting video games and computer program images.
  There is no problem with ordinary video cassette playback images.

Viewing Conditions (Brightness of Room)

- **Brightness of the room**
  Avoid direct exposure of screen to direct sunlight and illumination. Block light using a curtain. Images can be well projected by darkening the brightness of the room.
- **Do not view screen for prolonged hours**
  Looking at the screen continually for a prolonged time will cause your eyes to get tired. Allow your eyes to rest at intervals.
- **Do not use this unit when image flickers due to installation conditions and environment.**
  This may cause your eyesight to deteriorate.

Environment of Use

- **Do not use this unit in rooms with cigarette smoke**
  Do not use this unit in rooms with cigarette smoke.
  This may cause the unit to malfunction.
- **When mounting this unit to ceiling**
  Check temperature around the unit.
  When a heater is in use, the ceiling may reach a temperature higher than anticipated, hence leading to malfunction of the unit.

Maintenance Procedures

- **Clean dirt on the cabinet**
  with a soft cloth. In case of heavy soiling, soak a cloth in neutral detergent diluted with water, wring dry and wipe, followed by wiping again using a dry cloth.
- **Pay attention to the following as the cabinet may deteriorate in condition, get damaged or paint may come off.**
  - Do not wipe with a stiff cloth
  - Do not wipe with force
  - Do not wipe with thinner or benzene
  - Do not spray volatile chemicals like insecticide
  - Do not allow prolonged contact with rubber or plastic products
- **Dirt on the lens**
  shall be cleaned using using commercial blowers or lens cleaning papers (for cleaning glasses and cameras).
  Do not use fluid-type cleaning agents. This may lead to peeling of the surface coating film.
  Lens surface is fragile. Avoid rubbing or knocking it.

Standard for gauging replacement time of components

There are replacement components required for maintenance of the functions of this product such as optical components, cooling fan and filters. Life span of components varies considerably with the frequency of use and environment in which they are used. For replacement of components (except filters), please consult your authorized dealer.

Contents

SAFETY PRECAUTIONS **2**
Caution **5**
Accessories **6**
Controls and Features **7**
Front Side/ Top Surface/ Left Side 7
Rear Side/ Right Side/ Bottom Surface 8
Connector Panel 9
Control Panel 10
Indicator Display on the Control Panel 11
Remote Control 12
Loading Batteries into the Remote Control 13
Installing the Projector **14**
Precautions for Installation 14
Projector and Screen Installation 15
Mounting this Unit 15
Screen Size and Projection Distance 16
Effective Range of Remote Control Unit 17
Connecting to Various Devices **18**
Connecting to Devices 18
Connecting the Power Cord (supplied) 19
Basic Operations Procedures **20**
Adjustments and Settings Using Menus **22**
Menu Structure 22
Menu Operation Buttons 23
Procedures for Menu Operation 24
Menu Configuration 25
Screen Masking **26**
Picture Shift Setting **27**
Replacing the Lamp **28**
Light-source Lamp and Lamp Usage Time 28
Procedure for Lamp Replacement 28
Resetting Lamp Time 30
Cleaning and Replacing the Filter **31**
What to do when these messages are displayed . **32**
Warning Indication **33**
Troubleshooting **34**
Terminal Description **35**
Pin Arrangement 35
RS-232C External Control 36
Specifications **38**

Accessories

The following accessories are packed together with this unit. Please confirm all items.
If any item is missing, please contact your dealer.

Instructions	x 1
Guarantee	x 1
Power Cord	x 1
Remote Control (RM-MH2K)	x 1
AAA size Batteries (for operation confirmation)	x 2

■ **Optional Accessories**
※ Please seek your authorized dealer for details.

- **Replacement Lamp (Lamp Unit)** **BHL5006-S**
- **Replacement Filter**

Inner Filter	LC32058-002A
Lower Filter	LC32087-002A

Controls and Features

Front Side/Top Surface/Left Side

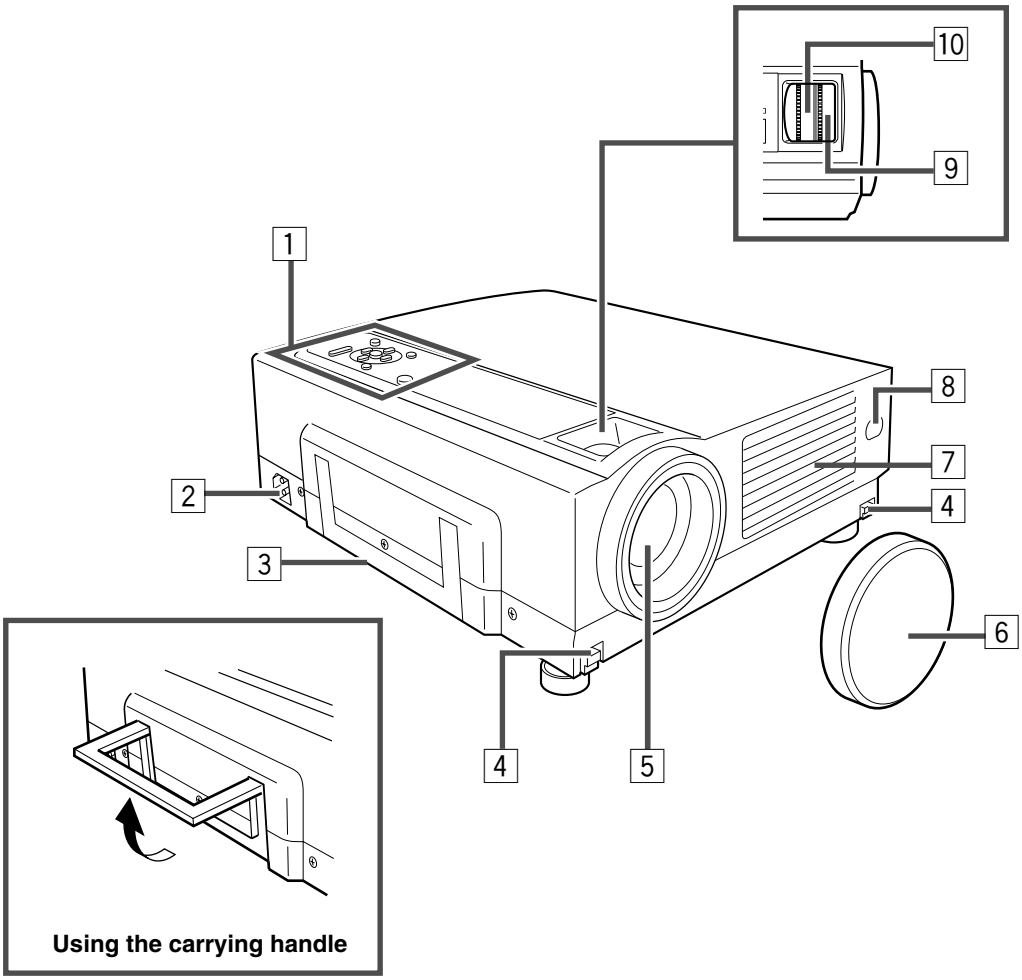

1 Control Panel
For details, please refer to 'Control Panel'. (☞ Page 10)

2 AC Power Input Terminal
This is the AC power input terminal. Connect the supplied power cord to this terminal. (☞ Page 19)

3 Carrying Handle
Use this handle when carrying this unit.

4 Foot Lever (for front adjustable foot)
Use when extending or retracting the front adjustable foot. (☞ Page 14)

5 Lens
This is a 1.3 x manual zoom lens.
Before projection, remove the lens cap. (☞ Pages 16, 19)

6 Lens Cap
It is recommended that the cap be fitted on the lens when this unit is not in use to prevent the lens from becoming dirty. (☞ Page 19)

7 Air Inlets (3 locations: front, right, bottom of unit)
The air inlets absorb air to cool the interior of the unit. Do not block or allow warm air to blow into them.
This may lead to malfunction of the unit.
- The air inlet filter on the right side cannot be removed. Please clean this filter regularly with, for example, a vacuum cleaner.

8 Remote Sensor (Front)
When operating with the remote control, aim it towards this sensor. (☞ Page 17)
- A remote sensor is also located on the rear of the unit.

9 Focus Ring
Turn manually to focus the projected image. (☞ Page 20)

10 Zoom Ring
Turn manually to zoom the projected image. (☞ Page 20)

Rear Side/Right Side/Bottom Surface

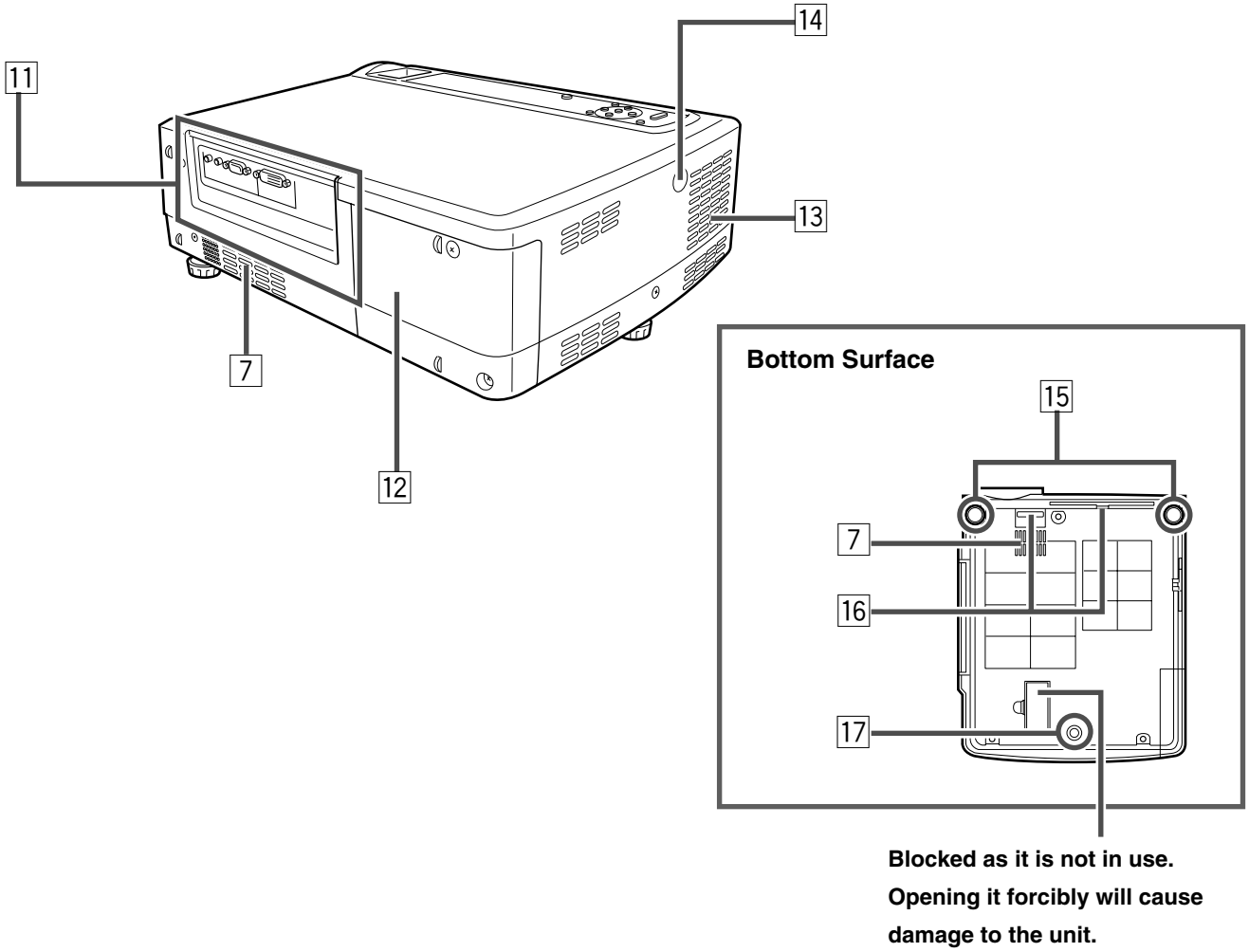

11 Connector Panel
For details, please refer to 'Connector Panel'.
(☞ Page 9)

12 Lamp Cover
Remove this cover when replacing the lamp.
(☞ Page 28)

13 Exhaust Vent
Warm air is expelled through this vent to keep the system cool. Do not block the exhaust vents.

14 Remote Sensor (Rear)
When operating with the remote control, aim it towards this sensor. (☞ Page 17)
- A remote sensor is also located at the front of the unit.

15 Front Adjustable Foot (for adjusting height and angle)
It is set at the lowest position when shipped from the factory.
The foot can be adjusted to a maximum angle of +6° and a maximum length of 31 mm. (☞ Page 14)

16 Filter
Cleans air drawn in from the air inlet.
Please clean this filter regularly. (☞ Page 31)

17 Rear Fixed Foot

Connector Panel

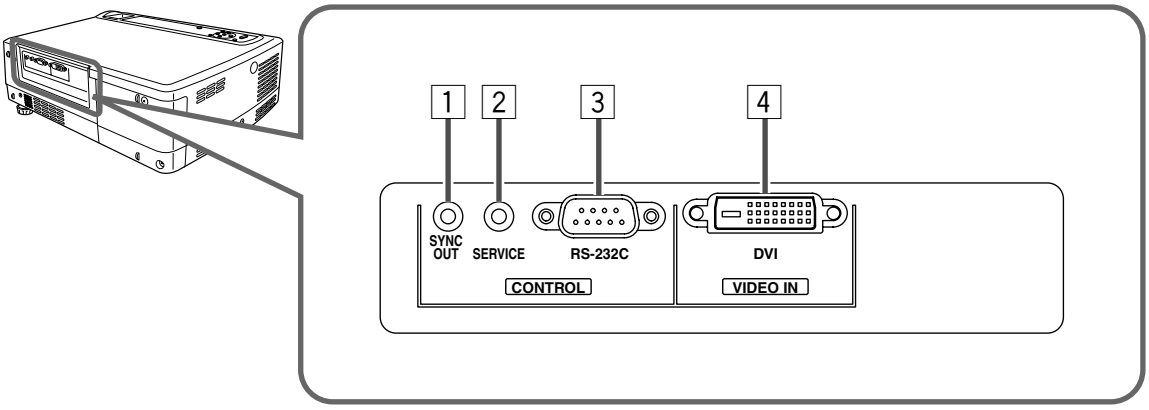

1 **[SYNC OUT] Terminal**

This terminal is intended for servicing purposes. Do not use it.
Using it may give rise to error or malfunction of the unit.

2 **[SERVICE] Terminal**

This terminal is intended for servicing purposes. Do not use it.
Using it may give rise to error and malfunction of the unit.

3 **[RS-232C] Terminal (D-sub 9 Pin)**

This is the RS-232C interface-specific terminal. This unit can be controlled by a computer connected externally. (☞ Page 18)

- For details, please check with your authorized dealer.

4 **[DVI] Terminal (DVI-D 24 Pin)**

This is an input terminal for video signals.
Connect this to a dedicated digital video processor. (☞ Page 18)

Control Panel

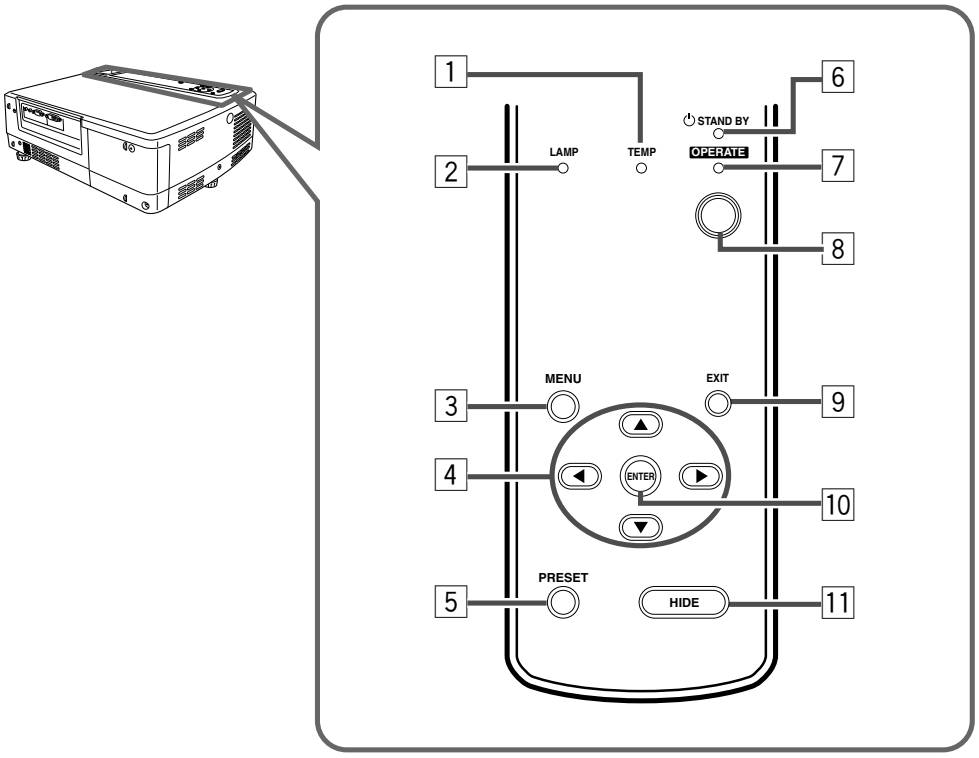

1 [TEMP] Indicator

Blinking: Indicates that temperature inside this unit is abnormally high. (☞ Pages 11, 33)

2 [LAMP] Indicator

Light on: Indicates that lamp has been used for more than 1900 hours. (☞ Pages 11, 28)

Blinking: Indicates that lamp usage time (about 2000 hours) is exceeded. Replace the lamp. (☞ Pages 11, 28, 33)

3 [MENU] Button

Press this button to display the menu. Pressing this button when the menu is displayed clears the menu. (☞ Pages 23, 24)

4 Cursor [▲/▼/◄/►] Buttons

Use these buttons when adjusting the menu items. (☞ Pages 23, 24)

5 [PRESET] Button

Use this button to reset the values to factory settings when the “Gamma”, “Color temp.”, “Mask” or “Picture shift” item in the menu is selected.

6 [STAND BY] Indicator

Light on: When in the standby mode. (☞ Page 11)

Blinking: When in the cool down mode. (☞ Page 11)

7 [OPERATE] Indicator

Light on: When this unit is in operation (during projection). (☞ Page 20)

8 [OPERATE] Button

When this unit is in the standby mode, pressing this button for more than 1 second will turn this unit on and cause the [OPERATE] indicator to light up.

Press it for 1 second or more again to switch the unit to the cool down mode, which will automatically switch to the standby mode after about 90 seconds. (☞ Page 20)

- The [OPERATE] button will not work within approximately 1 minute after the light source has been turned on. Start operation only after 1 minute’s time.

9 [EXIT] Button

Press this button to return to the previous hierarchical menu (for example, to return from submenu to main menu). Pressing this button when the menu is displayed will clear the menu. (☞ Pages 23, 24)

10 [ENTER] Button

Press this button to show the next hierarchical menu (for example, to enter submenu from main menu). It is also used when “ENTER” is displayed against a selection item on the menu screen. (☞ Pages 23, 24)

11 [HIDE] Button

Use this button to temporarily clear the video image. Press again to resume. (☞ Page 21)

Indicator Display on the Control Panel

In addition to the standby mode, operate mode and cool down mode*, this unit also displays other operational states using different combination of indicators.

- Please refer to Page 28 for explanations on warning indication for *1and Page 33 for *2.

[STAND BY] light on

Unit is in standby mode

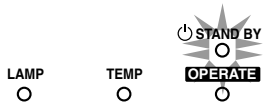

[OPERATE] light on

Unit is in operate mode (during operation (projection))

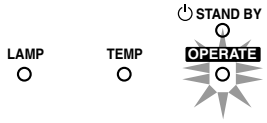

[STAND BY] blinking

Unit is in cool down mode (when cooling lamp)

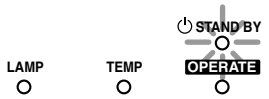

[LAMP] blinking*1

Lamp life has expired
(Lamp usage time has exceeded 2000 hours)

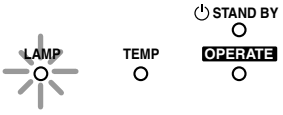

[LAMP] light on*1

About time to replace lamp
(Lamp usage time has exceeded 1900 hours)

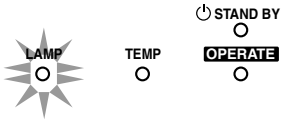

[LAMP] and [STAND BY] blinking*2

Lamp does not light up and unit is unable to project

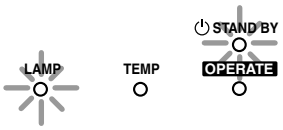

[LAMP] and [OPERATE] blinking simultaneously*1,*2

Lamp turned off during projection
Time to replace lamp
(when lamp usage time has reached 2010 hours)

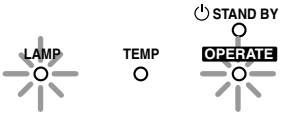

[LAMP] and [TEMP] blinking*2

Circuits are not functioning properly
(Abnormal circuit functioning)

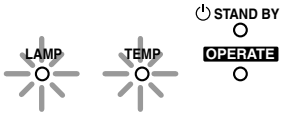

[LAMP] and [OPERATE] blinking alternately*2

Lamp cover has been removed

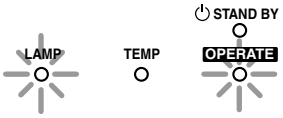

[TEMP] blinking*2

Internal temperature is abnormally high
(Abnormal internal temperature)

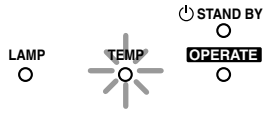

[TEMP] and [STAND BY] blinking*2

Temperature at air inlets is high
(Abnormal external temperature)

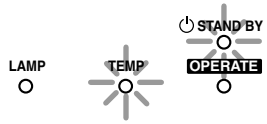

All blinking*2

When inner fan has stopped (fan lock)

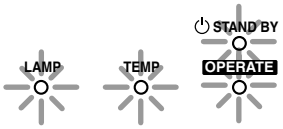

*About Cool Down Mode

After projection, the heated lamp will go through a 90-second cool-down process known as the cool down mode. This function is to prevent damage and deformation that heat from the heated lamp may cause to the internal components of this unit. It also prevents lamp breakage and shortened lamp life.
The cool down mode is indicated by the blinking [STAND BY] indicator. When in the cool down mode, the [OPERATE] button will be disabled.
After the cool down process is completed, the unit will automatically switch to the standby mode.

Note

When in the cool down mode, do not pull out the plug from the power outlet. Also, do not block the air inlets/exhaust vents by standing this unit on its end or laying it on its side.

Remote Control

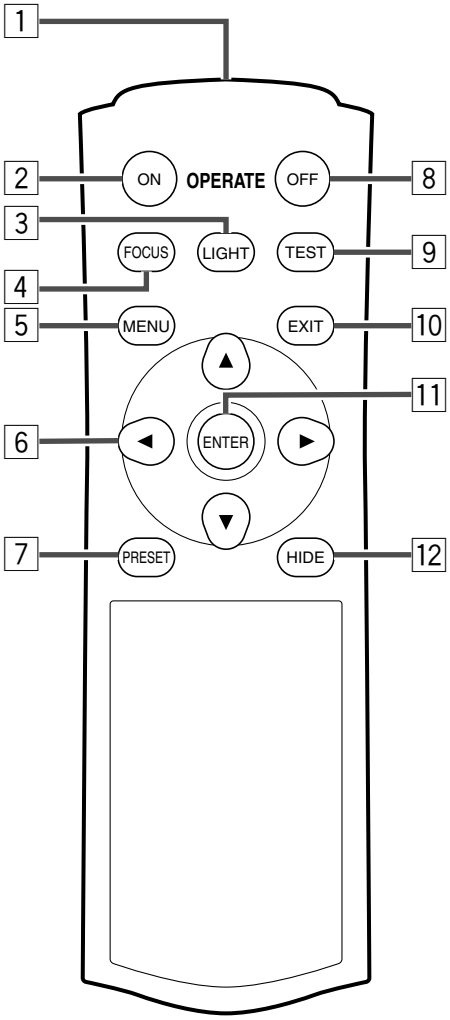

1 Remote Control's Signal Transmitter
(☞ Page 17)

2 [OPERATE ON] Button
When this unit is in the standby mode, pressing the button for more than 1 second will turn this unit on and cause the [OPERATE] indicator to light up. (☞ Page 20)

3 [LIGHT] Button
Lights up illumination (light) of the remote control buttons for about 10 seconds.

4 [FOCUS] Button
Use this button to adjust focus of the projected image. Press the button to switch to the image mode for focus adjustment. Adjust focus using the focus ring on this unit.
- Press the [EXIT] button to return to the original image.

5 [MENU] Button
Press this button to display the menu. Pressing this button when the menu is displayed clears the menu. (☞ Pages 23, 24)

6 Cursor [▲/▼/◄/►] Buttons
Use these buttons when adjusting the menu items. (☞ Pages 23, 24)

7 [PRESET] Button
Use this button to reset the values to factory settings when the "Gamma", "Color temp.", "Mask" or "Picture shift" item in the menu is selected.

8 [OPERATE OFF] Button
When this unit is in operation (projecting), press it for 1 second or more to switch to the cool down mode, which will automatically switch to the standby mode after about 90 seconds. (☞ Page 21)
- The [OPERATE OFF] button will not work within approximately 1 minute after the light source has been turned on. Start operation only after 1 minute's time.

9 [TEST] Button
Press this when adjusting focus, screen size or picture quality. Press the button to switch to the test pattern image for adjustment.
- Alter the test pattern with the [TEST] button.
- Press the [EXIT] button to return to the original image.

10 [EXIT] Button
Press this button to return to the previous hierarchical menu (for example, to return from submenu to main menu). Pressing this button when the menu is displayed will clear the menu. (☞ Pages 23, 24)

11 [ENTER] Button
Press this button to show the next hierarchical menu (for example, to enter submenu from main menu). It is also used when "ENTER" is displayed against a selection item on the menu screen. (☞ Pages 23, 24)

12 [HIDE] Button
Press this button to temporarily clear the video image. Press again to resume. (☞ Page 21)

Loading Batteries into the Remote Control

Load batteries into the remote control. If the remote control starts to function erratically, replace the batteries.

1 Open the back cover

Press the back cover slightly and slide it in the direction of the arrow.

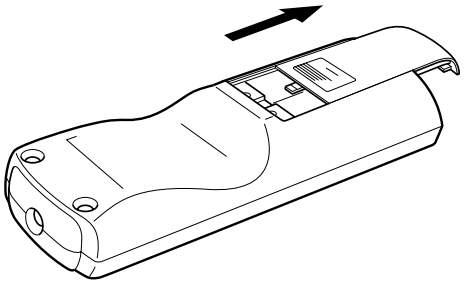

2 Load the batteries

Insert the 2 (AAA) batteries supplied according to the ⊕, ⊖ marks. To prevent short circuit, be sure to insert the ⊖ (minus) end of the battery first.

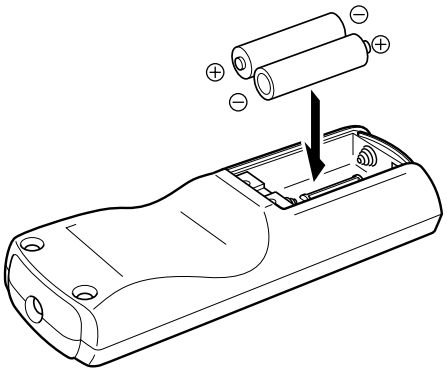

3 Close the back cover

Slide in the direction of the arrow to close the back cover.

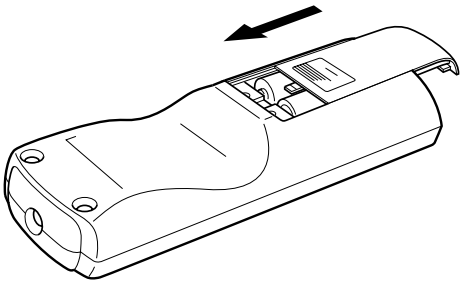

Precautions for Using Batteries

If batteries are incorrectly used, they may crack or leak. This could cause fire, burn, malfunction, and staining or damaging of the surroundings.

Beware of the following:

- Do not mix new and old batteries.
- Do not mix different type of batteries as they are different in characteristics.
- Insert batteries according to the ⊕ ⊖ marks on the battery case.
- Be sure to insert the minus ⊖ end in first to prevent short circuit.
- Do not put batteries into fire or recharge them.
- Use only designated batteries.
- Remove the batteries if the remote control is not to be used for a prolonged period.

Battery Life

Batteries last for 6 months to 1 year under normal use. However, batteries provided are for confirming operation and may not last that long. When the remote control fails to operate properly, replace the batteries with new ones.

Battery Leakage

When the batteries are totally exhausted and can no longer be used, replace them immediately.
Leaving the batteries in the battery compartment causes leakage, which may in turn lead to malfunction.
In cases where the leakage comes to contact with the skin, wipe it away with a cloth. Otherwise, skin problems may occur.

Installing the Projector

Precautions for Installation

Please read the following carefully when installing this unit.

Installation Environment

This unit is a precision device. Do not install it at the following places. Doing so may cause fire or malfunction of the unit.

- Where there is water, humidity or dust
- Where the unit may be subjected to oily or cigarette smoke
- On a soft surface such as carpet or cushion
- Where the unit may be subjected to high temperature due to direct sunlight
- Where temperature is high or low
  Allowable operation temperature range : +5 °C to +35 °C
  Allowable relative humidity range : 20% to 80% (no condensation)
  Allowable Storage Temperature range : –10 °C to +60 °C
- Any room in which there is cigarette smoke or grease
  Even where smoke and grease levels are minimal, prolonged exposure will affect this unit. This unit emits heat and optical components are cooled down by taking in large amount of air. The optical path may be soiled by grease/dirt, thus causing images to become dark or color projection to deteriorate. When soiling on the optical components occurs, removal of grease/dirt totally will not be possible.

Precaution for Usage

This unit uses a light-source lamp which reaches high temperature when projecting. Please do not use it in the following ways. Doing so may cause fire or malfunction of the unit.

- Projecting the image while the unit is on its side
- Projecting images outside the specified angle
  Do not use this unit by setting it beyond ±5° horizontally (left/right) or ±25° vertically (up/down). This may cause color variation or shorten the lamp life.
- Projecting images at places where the air inlets and exhaust vents are blocked

Minimum Space Required

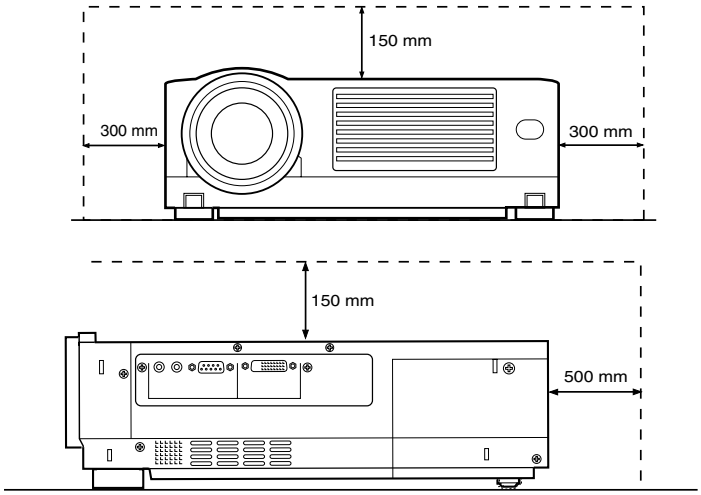

Do not use a cover which may enclose this unit air-tight or block the air inlets/exhaust vents. Allow sufficient space around this unit. When this unit is enclosed in a space of dimensions as indicated on the left, use an air-conditioner so that internal and external temperatures are the same.

Adjusting the Inclination

Adjust the vertical angle of this unit.

Vertical angle adjustment range

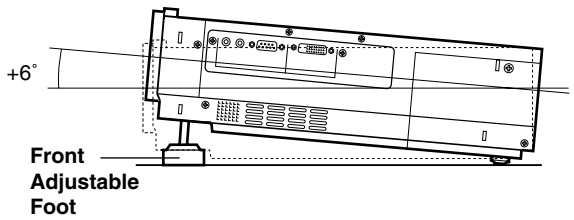

Adjusting the vertical angle
While pushing the foot lever upward, raise this unit to extend the front foot (maximum extension is about 31 mm). To retract the foot, push the level upward and lower the unit slowly. This unit will be fixed at the position where you released the foot lever.

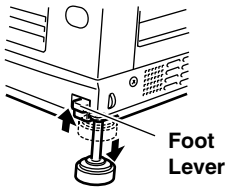

Fine-tuning the vertical angle
Lift this unit and adjust the front adjustable feet on the two sides.

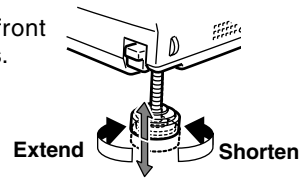

Projector and Screen Installation

The optimum image can be obtained when the center of this unit lens and the screen are placed perpendicular to each other. Take note of the projection angle when placing them. Failing to do so may give rise to trapezoidal distortion of the projected image.

- This unit does not come with a function to correct trapezoidal distortion.

■ When viewed from the left (or right)

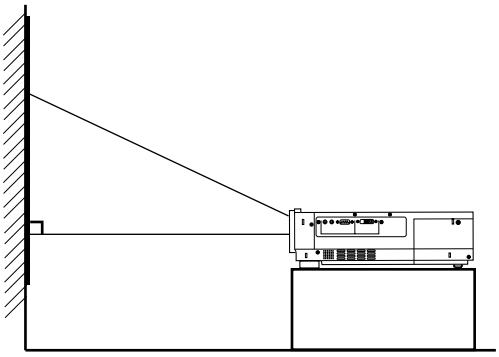

■ When viewed from the top (or bottom)

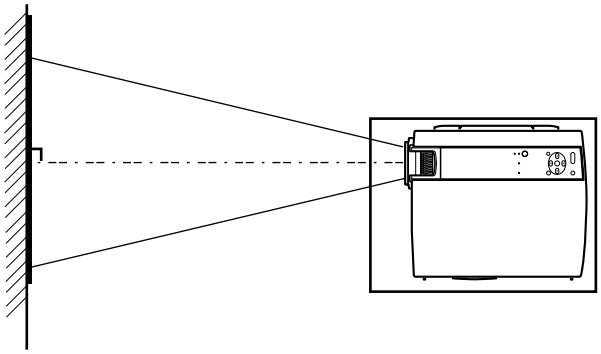

Mounting this Unit

When mounting of this unit is required, do it using the 3 embedded screw holes (M6 nuts) at the bottom of this unit.

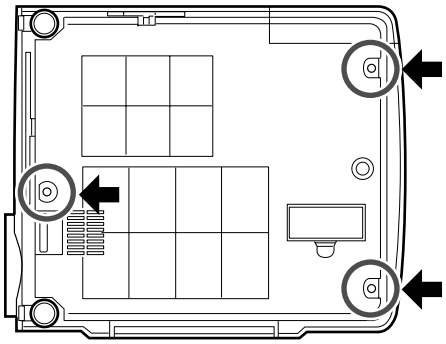

Precautions for Ceiling-mount

- To ceiling-mount this unit, special expertise and techniques are necessary.
  Be sure to ask your dealer (or a specialist) to perform mounting (to ceilings, etc.).
- Do not mount at places that may be subjected to vibration and shock.
- Depth of the screw holes (screw length) is 10 mm.
  Use screws shorter than 10 mm but longer than 6 mm.
  Otherwise, the screws may damage the internal parts of this unit and cause malfunction.
- Install at a safe place in case this unit or a part of it may drop. If the light-source lamp is broken, small pieces of glass from the mesh of the filter may appear outside this unit.

Screen Size and Projection Distance

- This unit uses a 1.3x manual zoom lens for projection.
- Although the focusable projection distance is about 1.5 m to 12 m, the projection distance recommendable for performance is about 2 m to 8 m. Install this unit within this range and adjust the screen size when the aspect ratio of the screen is 16:9.

■ Screen Installation

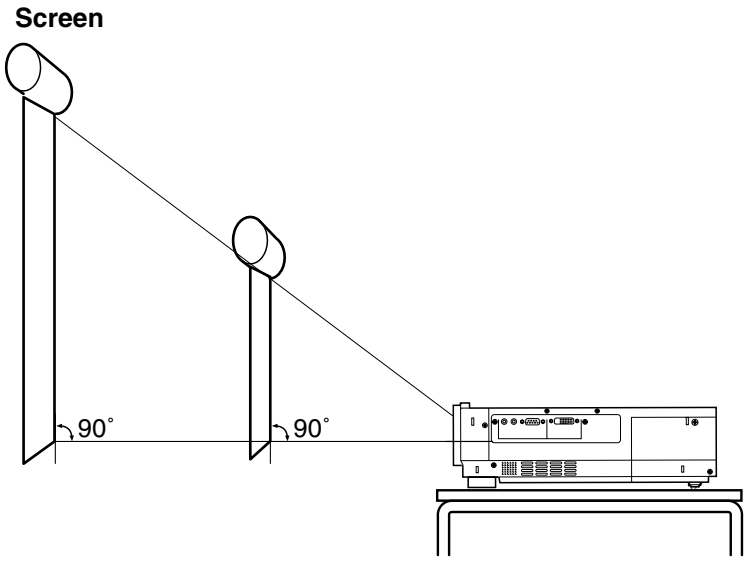

■ Relationship Between Projection Distance and Projection Screen Size

Projection Screen Size (Diagonal Length) of Aspect Ratio 16:9	Approximate Projecting Distance		
	W (Wide)	-	T (Tele)
40" (Approx. 101.6 cm)	(Approx. 1.58 m)	-	(Approx. 2.07 m)
50" (Approx. 127.0 cm)	(Approx. 1.99 m)	-	(Approx. 2.60 m)
60" (Approx. 152.4 cm)	(Approx. 2.39 m)	-	(Approx. 3.12 m)
70" (Approx. 177.8 cm)	(Approx. 2.79 m)	-	(Approx. 3.64 m)
80" (Approx. 203.2 cm)	(Approx. 3.19 m)	-	(Approx. 4.16 m)
90" (Approx. 228.6 cm)	(Approx. 3.60 m)	-	(Approx. 4.69 m)
100" (Approx. 254.0 cm)	(Approx. 4.00 m)	-	(Approx. 5.21 m)
110" (Approx. 279.4 cm)	(Approx. 4.40 m)	-	(Approx. 5.74 m)
120" (Approx. 304.8 cm)	(Approx. 4.81 m)	-	(Approx. 6.26 m)
130" (Approx. 330.2 cm)	(Approx. 5.21 m)	-	(Approx. 6.78 m)
140" (Approx. 355.6 cm)	(Approx. 5.61 m)	-	(Approx. 7.31 m)
150" (Approx. 381.0 cm)	(Approx. 6.02 m)	-	(Approx. 7.83 m)
160" (Approx. 406.4 cm)	(Approx. 6.42 m)	-	(Approx. 8.36 m)
170" (Approx. 431.8 cm)	(Approx. 6.82 m)	-	(Approx. 8.88 m)
180" (Approx. 457.2 cm)	(Approx. 7.23 m)	-	(Approx. 9.41 m)
190" (Approx. 482.6 cm)	(Approx. 7.63 m)	-	(Approx. 9.93 m)
200" (Approx. 508.0 cm)	(Approx. 8.03 m)	-	(Approx. 10.45 m)

- The projection screen sizes (recommended) and projecting distances in the table above are provided only as a guide. Please use them as reference during installation.
  The projected image size may vary depending on the manufacturing tolerance of the lens.

Effective Range of Remote Control Unit

The operable distance of the remote control unit is about 7 m for direct reception. The remote control unit can be used by having the transmission signal reflected off a screen.

- If the fluorescent lamp is lit, the remote control unit might not function properly.

■ When reflecting off a screen

Ensure that total of distance A between this unit and screen and distance B between remote control and screen is within 7 m.

- As the effect of signals reflected from the remote control unit differ with the type of screen used, operable distance may decrease.

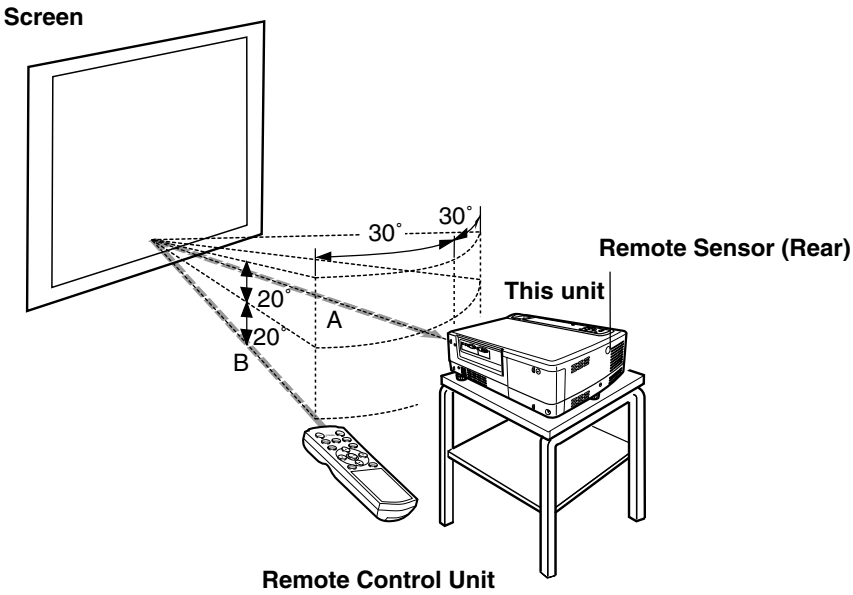

■ When directing remote control unit toward this unit

When aiming the remote control unit towards the remote sensor on this unit, ensure that the distance to the sensor in front or at the rear of this unit is within 7 m.

- If the remote control fails to work properly, move closer to this unit.

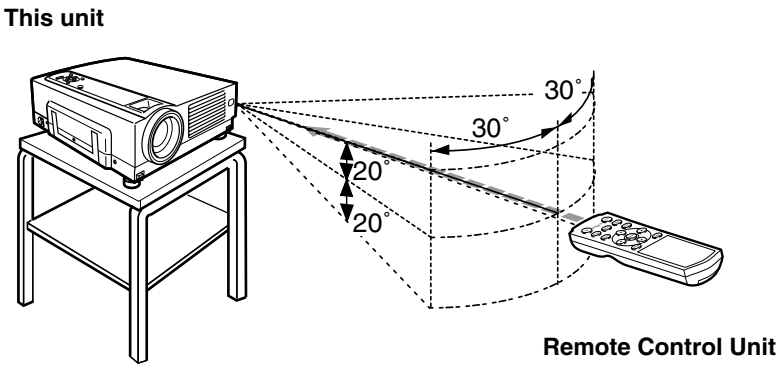

Connecting to Various Devices

Connecting to Devices

Before connection, be sure to turn off both the projector and the device to be connected.

■ Connecting to digital video processors

- Read the manual that is supplied with the digital video processor thoroughly.
- The signal may attenuate and the image may become unstable depending on the DVI cable. Use the high quality DVI cable below 5 m. When using DVI cable above 5 m, use a split system or optical fiber cable.

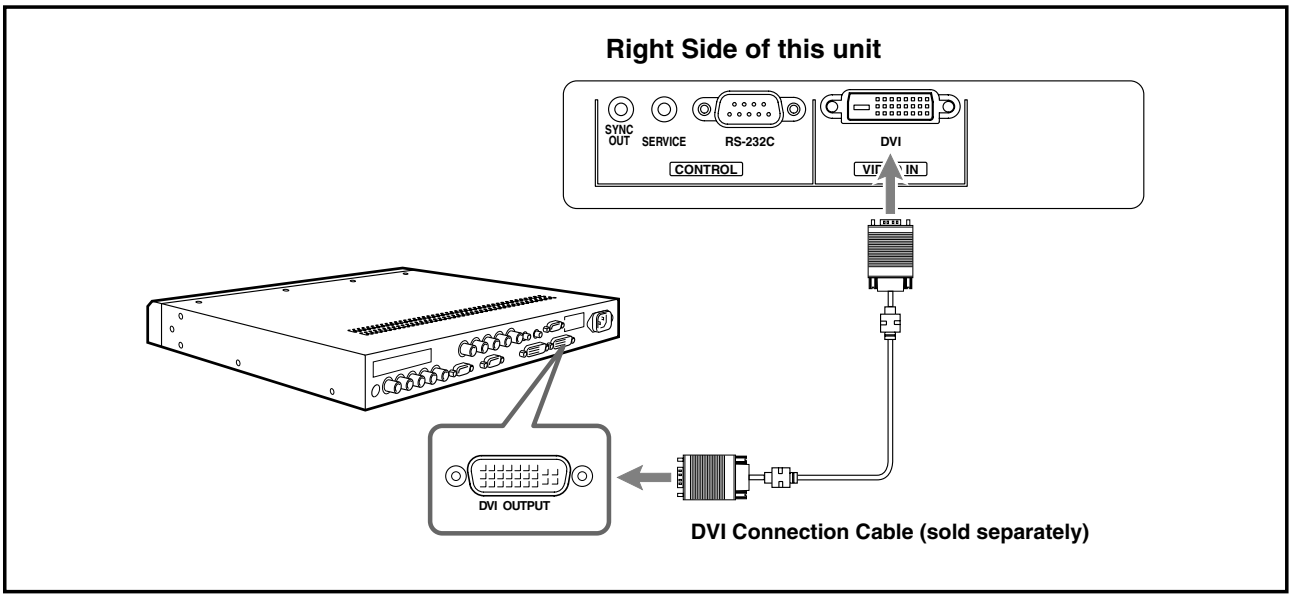

■ Control from external device

It is possible to control this unit by connecting a computer to the [CONTROL RS-232C] terminal of this unit.

- Please request a connection cable from us if needed.
- For details, please consult your authorized dealer.

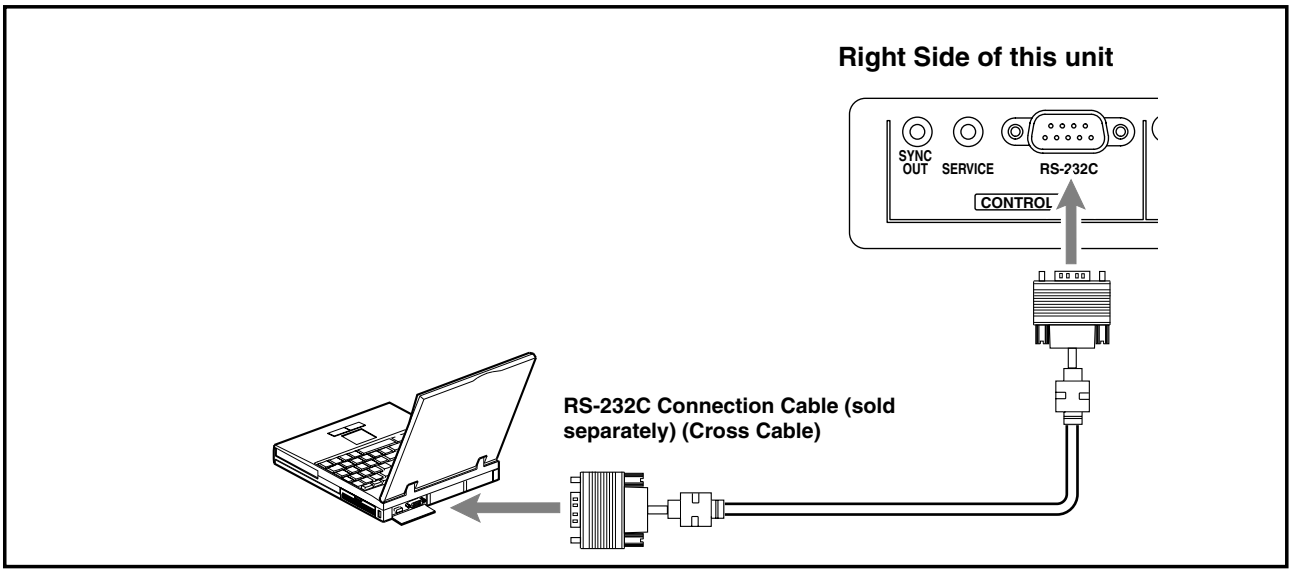

Connecting the Power Cord (supplied)

After all devices have been connected, connect the supplied power cord.

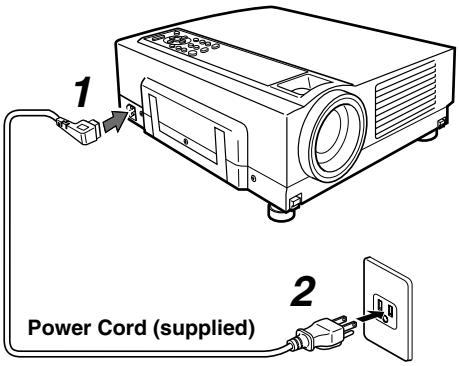

1 Connect the supplied power cord to the power input terminal of this unit

2 Insert the main plug of the supplied power cord into the wall outlet

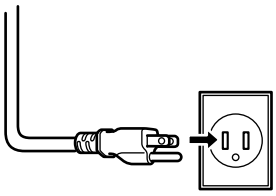

(e.g.)

Cautions Against Fire and Electric Shock

- **Since the power requirement of this unit is high, insert the power plug directly into a wall outlet.**
- When not using devices, remove the power plug from the wall outlet.
- Do not use power cords for connection other than those supplied.
- Do not use a power voltage different from that which is indicated.
- Do not cut, tear or modify the power cords. Also, do not place a heavy object on, heat or stretch the power cords as this may cause damage to the cords.
- Do not insert or pull out plugs with a wet hand.

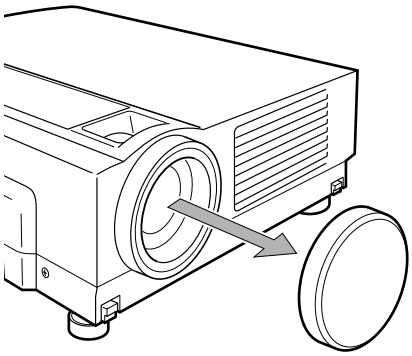

Lens Cap

When using this unit, remove the lens cap

- Be sure to fit the lens cap on when this unit is not in use to keep out dirt.
- Do not project with the lens cap attached. The lens cap may be deformed by heat or malfunction of this unit may occur.

Basic Operation Procedures

If setting for this unit is not completed, please refer to “Adjustments and Settings Using Menus”(☞ Page 22) upon turning on the power and perform the required setting accordingly. Once the basic setting is completed, this unit can be used by simply performing the following operation procedures.

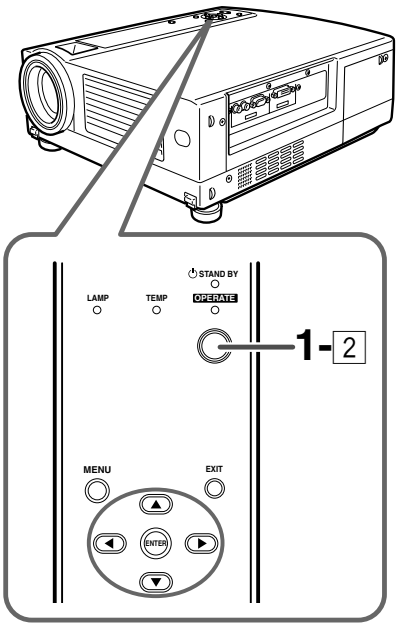

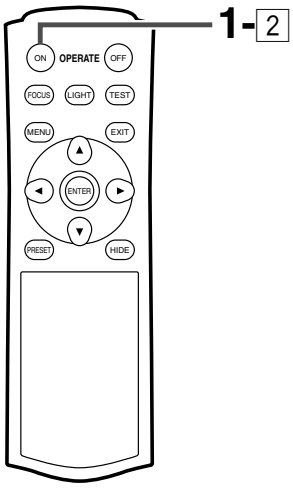

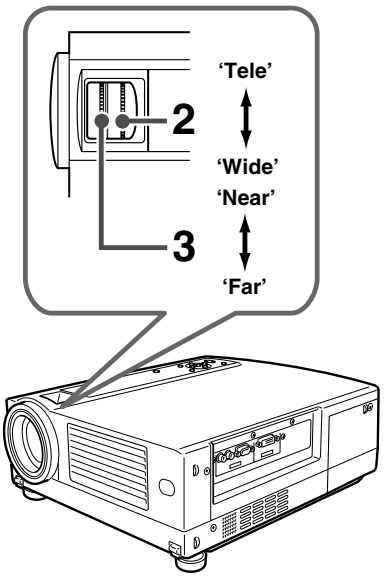

1 Turning on the power

1 Insert the power plug to the power outlet.

- The main power turns on and the [STAND BY] indicator on the unit lights up.

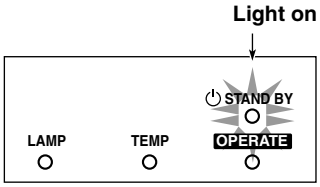

Indicators on this unit

2 Press the [OPERATE] button on this unit (or the [OPERATE ON] button on the remote control unit) for 1 second or more

- The [OPERATE] indicator on this unit lights up and the projected image slowly appears.

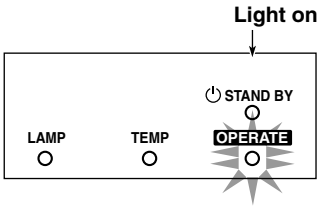

Indicators on this unit

Notes

- Upon projection, the image may flicker for a few seconds. This is not a malfunction.
- When the light source is turned on, the lamp will slowly become brighter. It will take more than 1 minute for the brightness to stabilize.

2 Adjusting zoom (screen size)

To enlarge the screen size

Turn the zoom ring towards the ‘Wide’ side.

To reduce the screen size

Turn the zoom ring towards the ‘Tele’ side.

3 Adjusting focus

To focus on nearer points

Turn the focus ring towards the ‘Near’ side.

To focus on farther points

Turn the focus ring towards the ‘Far’ side.

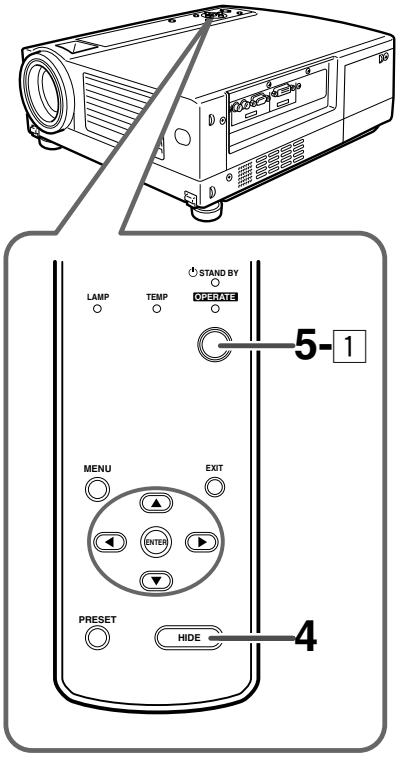

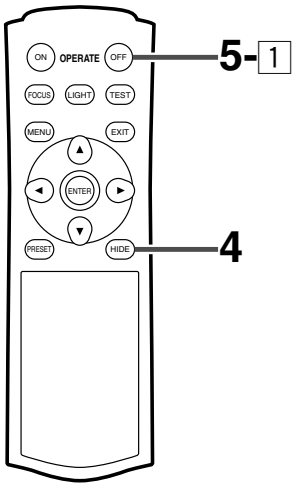

4 Hiding the image temporarily

Press [HIDE]

- The displayed image will disappear.
- Press [HIDE] again to restore the image.

5 Turning off the power

1 Press the [OPERATE] button on this unit (or the [OPERATE OFF] button on the remote control unit) for 1 second or more

- The [OPERATE] indicator turns off, the [STAND BY] indicator starts blinking and this unit switches to the cool down mode. The cool down mode is to allow the temperature of the light source lamp to cool off. (☞ Page 11)

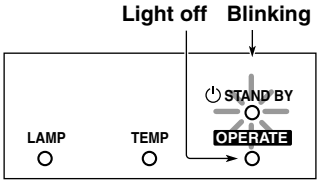

Indicators on this unit

> **Note**
> - The [OPERATE OFF] button will not work within approximately 1 minute after the light source has been turned on. Start operation only after 1 minute's time.

2 Pull out the power plug from the power outlet

> **Note**
> - Do not pull out the plug when the [STAND BY] indicator is blinking. This may shorten the lamp life and cause a malfunction.

Adjustments and Settings Using Menus

The menus displayed on the screen are used to perform adjustment and setting for this unit.

Menu Structure

The menus of this unit have the following structure.

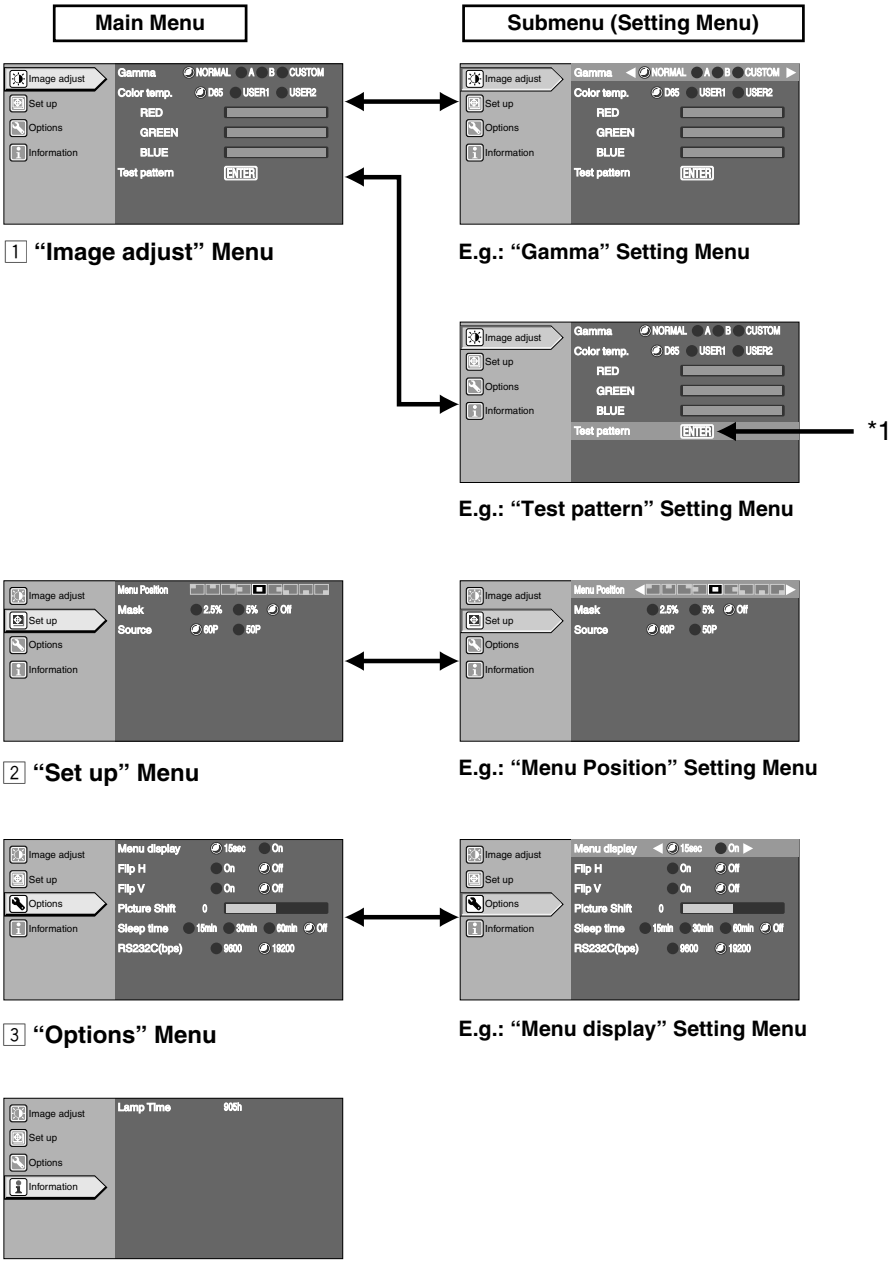

1 **"Image adjust" Menu**

E.g.: "Gamma" Setting Menu

E.g.: "Test pattern" Setting Menu

2 **"Set up" Menu**

E.g.: "Menu Position" Setting Menu

3 **"Options" Menu**

E.g.: "Menu display" Setting Menu

4 **"Information" Menu**

*1 Press the [ENTER] button to switch to the test pattern image. There are 10 types of test patterns. Press the [ENTER] or [TEST] buttons to alter the test pattern to be projected.

Menu Operation Buttons

The menus are operated using buttons on this unit or remote control unit.

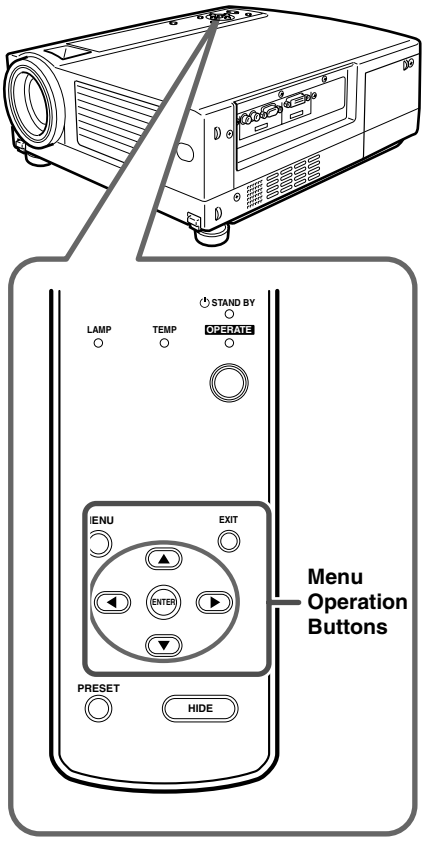

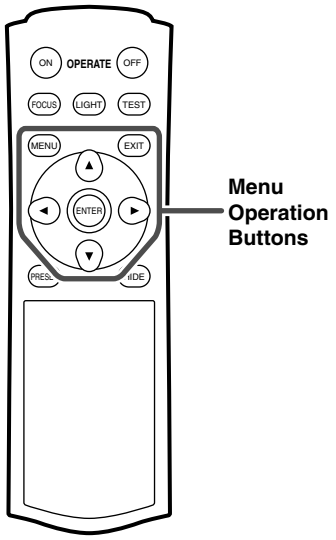

Button		Function
This Unit	Remote Control Unit	
MENU 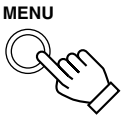		Displays the main menu. ● Press to clear the menu screen when the menu is displayed.
		Confirm the selected item on the main menu. ● Press [ENTER] when the “Test Pattern” item is selected to project the test pattern on the screen. After it is projected, test pattern changes each time [ENTER] is pressed.
EXIT		Press to return to the previous menu. ● Press to clear the menu screen when the main menu screen is displayed. ● Press to clear the test pattern when a test pattern is displayed.
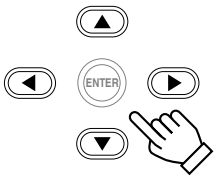 This Unit 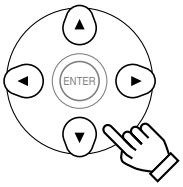 Remote Control Unit		▲/▼: Select menu items and adjustment items. ◄/►: Perform setting of the selected adjustment item. (Setting is not possible for some items) The adjusted value will be reflected on the image immediately.

Procedures for Menu Operation

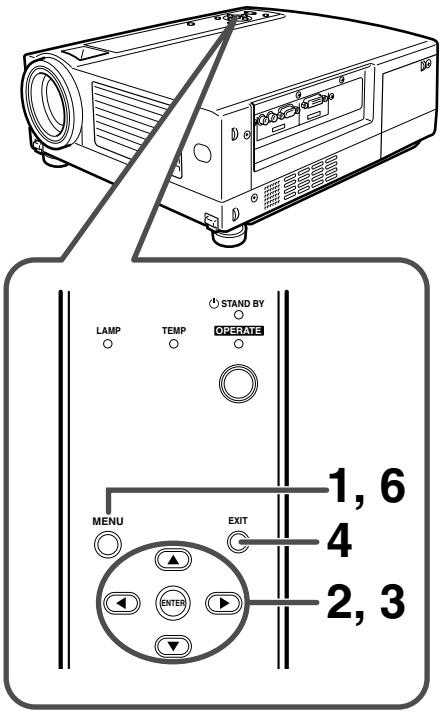

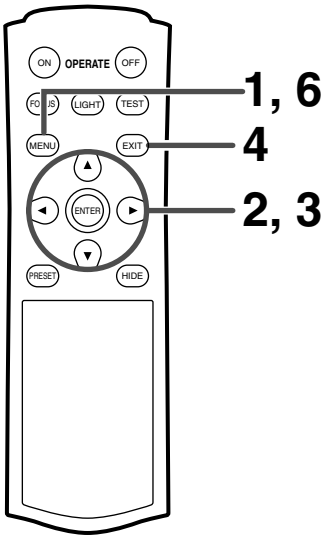

1 Press the [MENU] button

- The main menu is displayed on the screen.

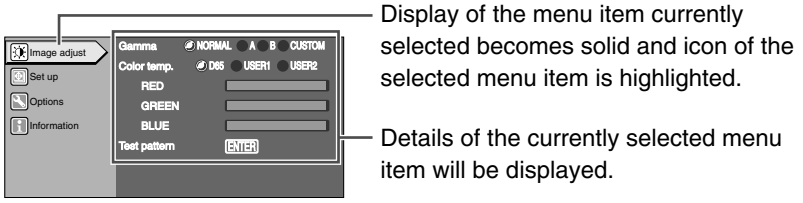

E.g.: “Image adjust” menu

2 Press [▲/▼] to select a main menu item and [ENTER] to confirm

- The “Information” menu does not have a setting menu (submenu).

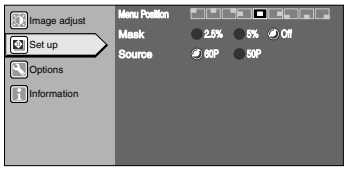

E.g.: “Set up” menu

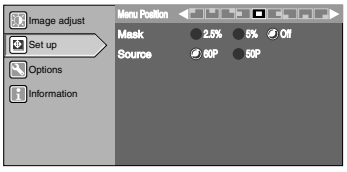

E.g.: “Menu Position” setting menu

3 Press [▲/▼] to select an adjustment item and [◄/►] to change the setting value

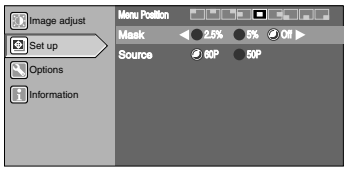

E.g.: “Mask” setting menu

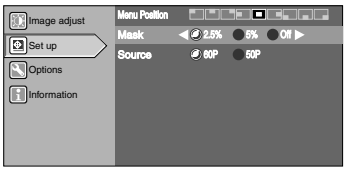

E.g.: “Mask” setting menu

- Press [ENTER] after selecting “Test pattern” on the “Image adjust” menu. This will project the test pattern.

4 After setting is completed, press [EXIT]

- Each time you press the button, the menu returns to the previous one.

5 Repeat procedures 2 to 4 to set other items

6 After setting is fully completed, press [MENU]

- The menu will disappear from the screen.

Menu Configuration

Item values shown in { } are factory settings.

1 "Image adjust" Menu

To adjust images.
On the "Image adjust" menu, you can adjust the following items.

"Gamma"

Switches the gradation characteristics of the image. Select your preference setting values according to the image to be viewed.

Setting Values : "NORMAL", "A", "B", "CUSTOM" {"NORMAL"}
"CUSTOM" : Use when setting Gamma with optional software. The picture quality is same as "NORMAL" for factory setting.

"Color temp."

Adjusts the color temperature of the projected image.

Setting Values : "D65", "USER1", "USER2" {"D65"}
"RED" : -255 to 0 {0}
"GREEN" : -255 to 0 {0}
"BLUE" : -255 to 0 {0}

"Test pattern"

Use this to adjust focus, screen size or picture quality. There are 10 types of test patterns. Press the [ENTER] or [TEST] button to alter the test pattern to be projected.

2 "Set up" Menu

The following items can be set at the "Set up" menu.

"Menu position"

Adjusts the display position of the menu screen.

Setting Values (menu display position):

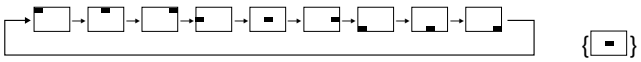

"Mask"

Masks (hides) the outer area of the projected image.

Setting Values : "2.5%", "5%", "Off" {"Off"}

"Source"

Sets the image format for video image signals that are input to this unit.
Ensure to align settings between this unit and the digital video processor that is connected.

Setting Values : "60P", "50P" {"60P"}

3 "Options" Menu

The following items can be set at the "Options" menu.

"Menu display"

Adjusts the display duration of the menu screen.

Setting Values : "15 sec", "On" {"15sec"}

"Flip H"

Reverses image to the left or right.

Setting Values : "On", "Off" {"Off"}

"Flip V"

Inverses image upside down.

Setting Values : "On", "Off" {"Off"}

"Picture shift"

When projecting images with black bands at the top and bottom (cinema image), use this to move the image up or down while retaining one of the black bands at the upper or lower end.

Setting Values : -30 to 30 {0}

"Sleep time"

Sets the lapse time before automatically switching the unit to the standby mode when there is no signal input.

Setting Values : "15 min", "30 min", "60 min", "Off" {"Off"}

"RS232C (bps)"

Sets the communication speed (signal transmission speed) when communicating with a computer using the RS-232C terminal. Ensure that this is same as the rate set at the computer.

Setting Values : "9600", "19200" {"19200"}

4 "Information" Menu

"Lamp Time"

Displays the accumulated hours of usage of the light-source lamp.

Screen Masking

Images for which quality at the outer area has deteriorated can be projected by masking (hiding) the outer area of the projected image.

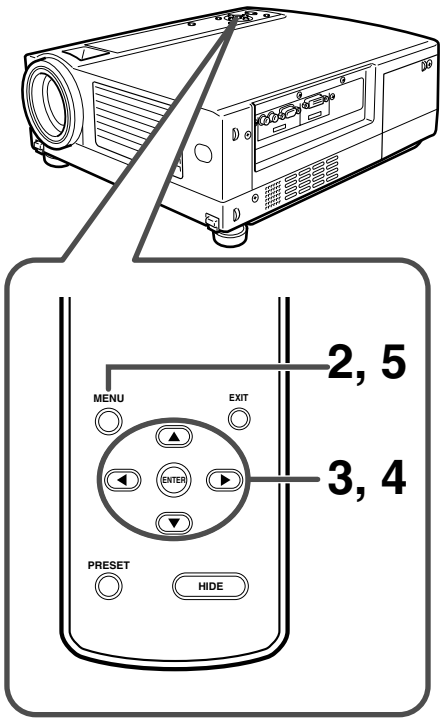

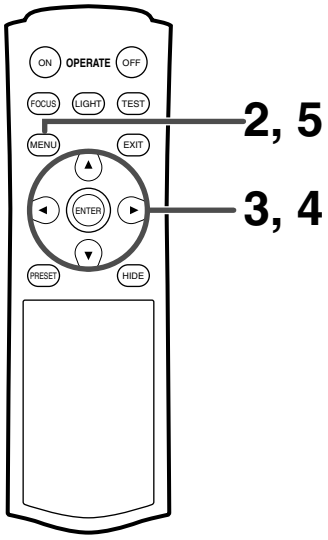

1 Project image onto the screen

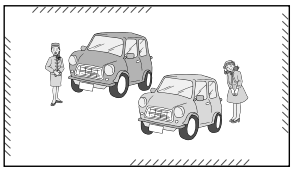

Image for which the outer area has deteriorated

2 Press the [MENU] button

- The main menu is displayed on the screen.

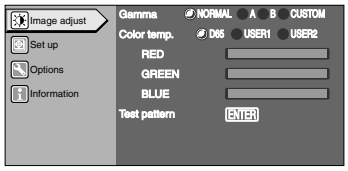

3 Press [▲/▼] to select "Set up", followed by pressing [ENTER]

- The "Set up" menu appears on the right side of the screen.

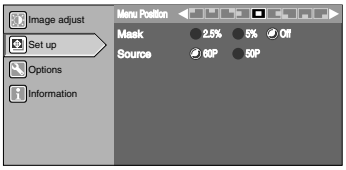

4 Press [▲/▼] to select "Mask", followed by pressing [◄/►] to select the setting value

- Masks (hides) the outer area of the projected image.

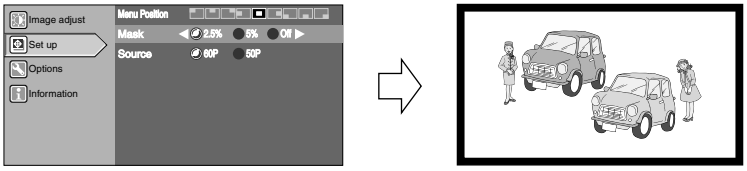

E.g.: When "Mask" value is changed from "OFF" to "2.5%"

5 Press the [MENU] button to end

- The menu will disappear from the screen.

Picture Shift Setting

When projecting images with black bands at the top and bottom (cinema image), use this to move the image up or down while retaining one of the black bands at the upper or lower end.

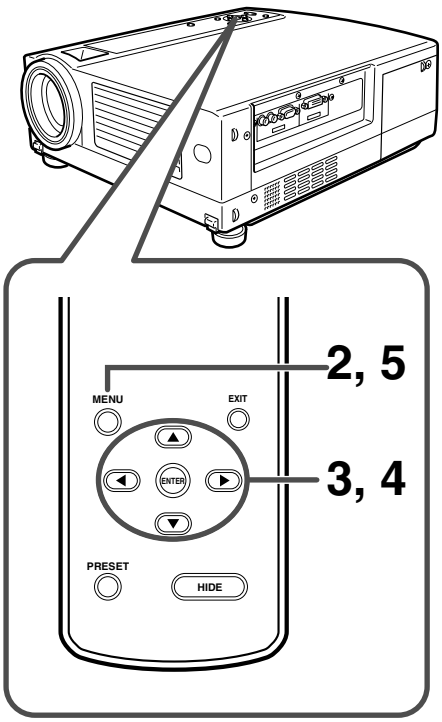

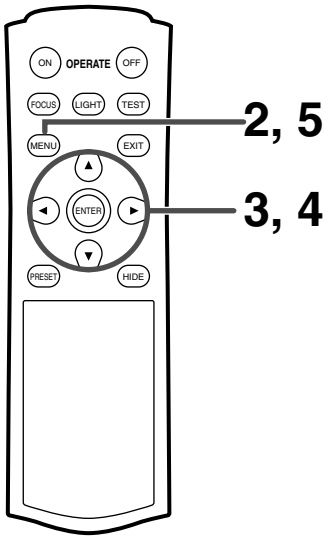

1 Project image onto the screen

← 2.35:1 Cinema Image

2 Press the [MENU] button

- The main menu is displayed on the screen.

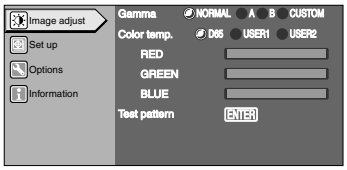

3 Press [▲/▼] to select "Options", followed by pressing [ENTER]

- The "Options" menu appears on the right side of the screen.

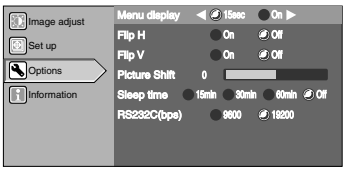

4 Press [▲/▼] to select "Picture Shift", followed by pressing [◄/►] to move the image upwards or downwards

- Set value in the positive (+) direction to move the image upwards and negative (-) direction to move downwards.

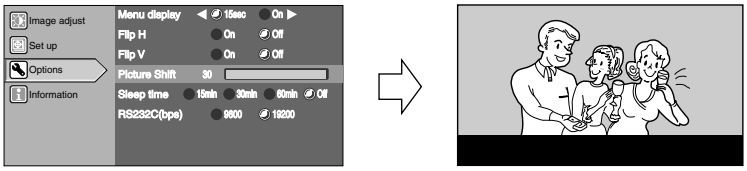

E.g.: When "Picture Shift" value is changed from "0" to "30"

5 Press the [MENU] button to end

- The menu will disappear from the screen.

Replacing the Lamp

Light-source Lamp and Lamp Usage Time

The light-source lamp has a service life. The life of lamps used for this unit is about 2000 hours.

- The lamp life of 2000 hours is merely the average life span of lamps and we do not provide any guarantee for this figure. The lamp life may not reach 2000 hours depending on the operating conditions.

When the light-source lamp approaches the end of its service life, deterioration progresses rapidly. Get ready or replace with a new lamp (lamp unit) when the accumulated lamp usage time exceeds 1900 hours. Depending on the operating conditions, the lamp may have to be exchanged earlier. If the image is dark or color tone abnormal, replace the lamp as soon as possible. You can also check the accumulated hours of usage. Please refer to the "Lamp Time" item of the "Information" menu. (☞ Pages 22, 25)

Please consult your authorized dealer when purchasing a new lamp unit.

■ **Replacement Lamp (Lamp Unit) Part No.: BHL 5006-S**

■ **When the lamp usage time exceeds 1000 hours**

A message indicating "1000 h" will be displayed on the screen.

- Press the [EXIT] button to clear the display.

■ **When the lamp usage time exceeds 1900 hours**

The [LAMP] indicator lights up.

■ **When starting projection after lamp usage time exceeds 1900 hours**

The "Lamp replacement" message will be displayed on the screen.

- Press the [EXIT] button to clear the display.

■ **When lamp usage time exceeds 2000 hours**

The [LAMP] indicator starts to blink.

The "Warning" and "Lamp replacement" messages will be displayed on the projected screen with the "Warning" word blinking.

- Press the [EXIT] button to clear the display.
  However, the same "Warning" and "Lamp replacement" messages will be displayed again after 1 hour.

※When the unit is switched to the standby mode or turned off after the lamp usage time exceeds 2000 hours, it cannot be switched back to the projection mode again. In this case, replace with a new lamp (lamp unit) and reset the lamp time (☞ Page 30).

■ **When the lamp usage time exceeds 2010 hours**

The unit quits the projection mode (operating mode) and switches into the cool down mode.

- The [LAMP] and [OPERATE] indicators will start blinking.

※The projection mode (operating mode) cannot be restored until a new lamp (lamp unit) is replaced and the lamp time reset (☞ Page 30).

About Lamp Replacement

- If this unit is installed in a constricted place, attempting to replace the lamp in that place may cause injury. Move this unit to a place large enough to perform the work.
- Use only genuine replacement parts for the lamp unit. Otherwise, malfunction may occur. Also, never attempt to re-use an old lamp unit. This may cause marked performance deterioration or lamp blowout, thus leading to unit malfunction. Broken pieces of the lamp outside this unit may also cause injuries during lamp unit exchange.
- Do not replace the lamp immediately after this unit has been used. The temperature of the lamp unit is still high and this may cause a burn. Allow a cooling period of 1 hour or more before replacement.
- Before replacing the lamp unit, pull out the power plug from the outlet while the [STAND BY] indicator is still on. Replacing a lamp with the plug connected to the outlet may cause injuries or electric shocks.

Procedure for Lamp Replacement

1 Loosen the screws and remove the lamp cover

- Loosen the 2 screws with a ⊕ screwdriver.

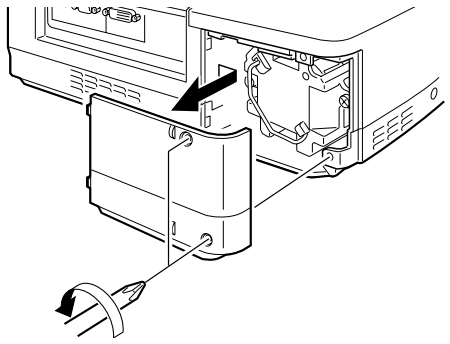

2 Loosen the screws on the lamp unit and lift up the handle

- Loosen the 2 screws with a ⊕ screwdriver.

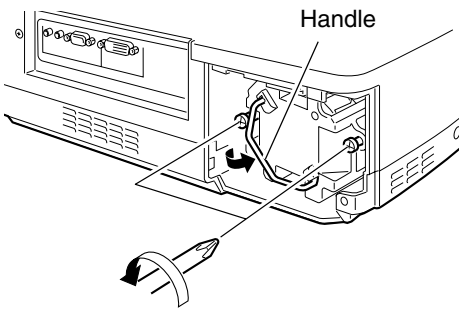

3 Pull out the lamp unit

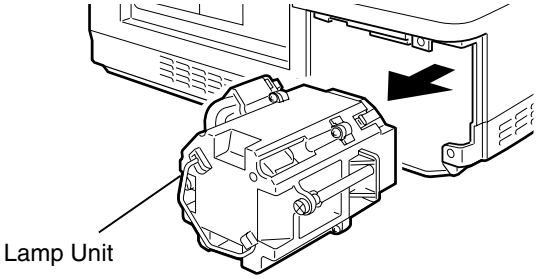

4 Insert the new lamp unit until it is fully in

Caution

Do not touch the glass surface of the lamp directly with your hand or stain it. Touching it with a bare hand may dirty the surface, hence shortening the lamp life, causing marked performance deterioration such as darkened screens, lamp blowout as well as malfunction.

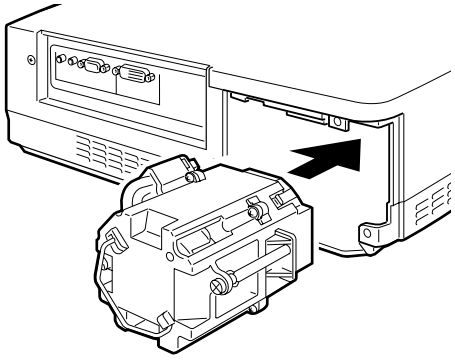

5 Tighten the screws of the lamp unit and close the handle

- Fasten the 2 screws with a ⊕ screwdriver.

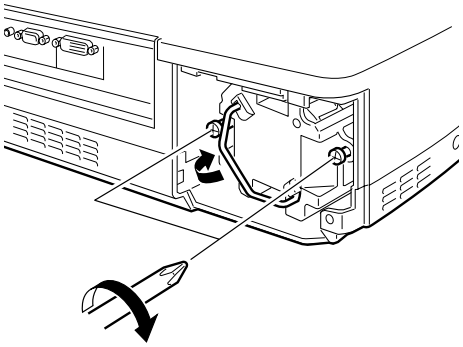

6 Attach the lamp cover and fasten the screws

- Fasten the 2 screws with a ⊕ screwdriver.

Note

When fitting the lamp cover, insert the left end (with 2 claws) of the lamp cover into the unit, followed by ensuring that the protruding part on the reverse side of the lamp cover fits snugly into the hole of the unit.
As this protrusion acts as a switch, misfitting may lead to failure in turning on the power.

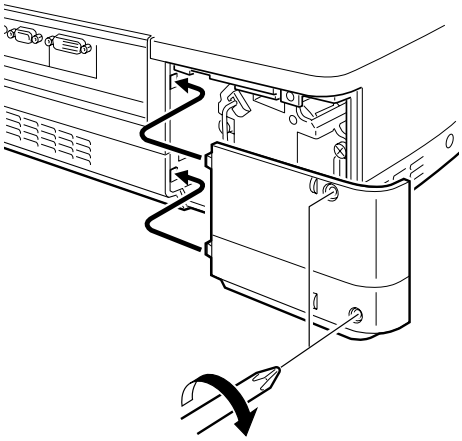

Resetting Lamp Time

After installing a new lamp (lamp unit), reset the lamp time. The lamp time counter will be reset and a new count will start.
If display of the accumulated lamp time has reached 2000 hours, this unit will not work (lamp does not light up) unless the lamp time is reset.

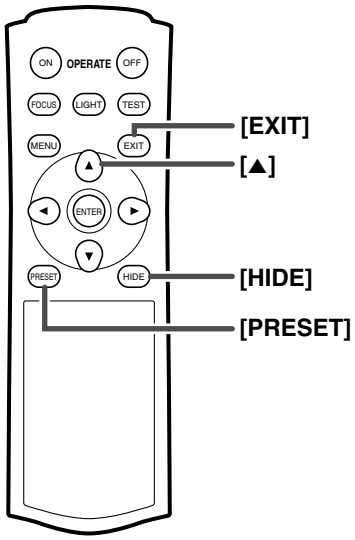

1 Insert plug into the power outlet

- The [STAND BY] indicator on the unit lights up when the main power is turned on.

2 Press the [EXIT], [HIDE] and [PRESET] buttons sequentially, then press [▲] for 2 seconds or more

- The [STAND BY] and [OPERATE] indicators will alternately blink for a duration of 3 seconds each. After blinking stops, lamp time resets and the unit returns to the standby mode ([STAND BY] indicator lights up).

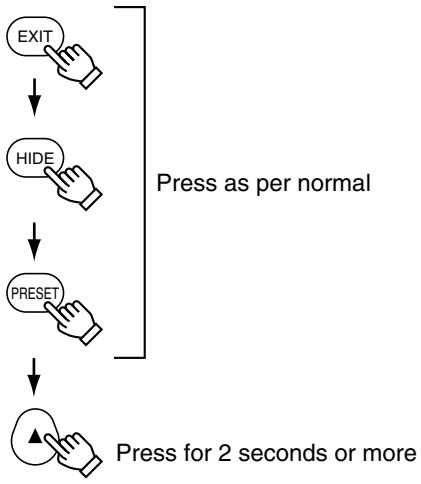

To ensure the lamp time has been reset

The lamp time can be checked via the “Lamp Time” item under “Information” of the main menu. (☞ Pages 22, 25)

Caution During Reset Work

Reset the lamp time only when you have replaced the lamp.
Never reset it when the lamp is still in use.
Otherwise, the approximate standard for gauging replacement time may be inaccurate, lamp performance may deteriorate and lamp blowout may occur.

Cleaning and Replacing the Filter

Clean the filter regularly or air intake efficiency may deteriorate and malfunction may occur. If the filter is extremely dirty and cannot be cleaned, or if it is damaged, replace the filter with a new one (lower filter: LC32087-002A / inner filter: LC32058-002A). Otherwise, dirt may enter the unit and appear on the screen, preventing you from enjoying the video fully. If dirt has entered the unit or if you need information about the filter, please consult your authorized dealer.

※ **The air inlet filter on the right side cannot be removed. Please clean this filter regularly with, for example, a vacuum cleaner.**

1 Pull out the plug from the power outlet

- Pull out the power plug from the outlet while the [STAND BY] indicator is still on.

2 Remove the lower filter

- Withdraw the filter backwards along the rail in the direction of the arrow.

3 Remove the inner filter

- Push up and lift the claw at the base of the inner filter, followed by drawing out the filter.

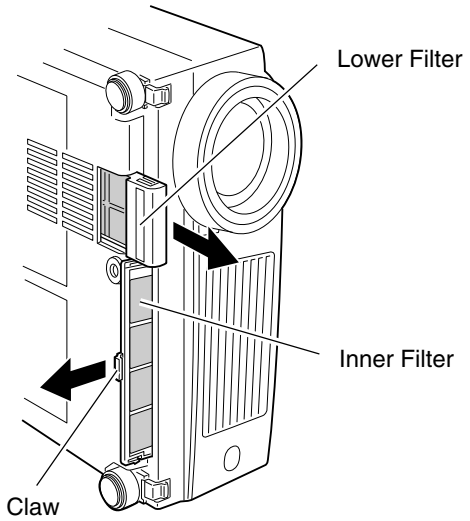

4 Clean the filter

- Clean the filter with water and dry it, avoiding direct sunlight. In extremely soiled cases, use of a neutral detergent is recommended.

- Put on rubber gloves when using a neutral detergent.
- After washing a filter with water, make sure that the filter is completely dry before reinstalling. Otherwise, electric shocks or malfunctions may occur.
- Do not clean lower filters and inner filters with a vacuum cleaner. Since these filters are soft, they may be damaged if they are sucked into the vacuum cleaner.

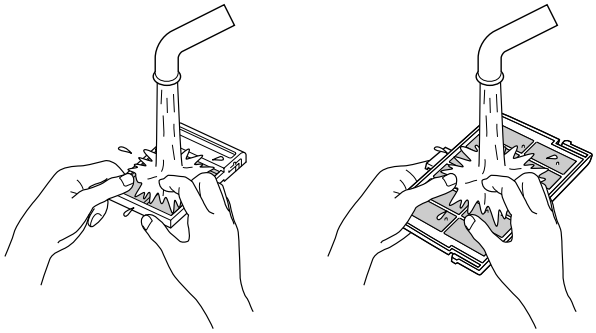

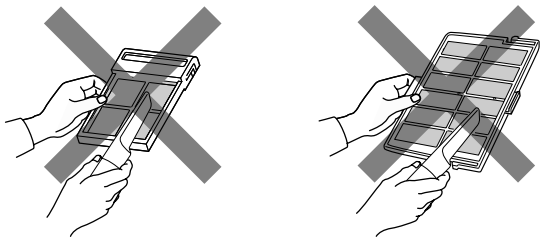

5 Reinstall the lower filter

- Reinstall the lower filter by inserting it into this unit.

6 Reinstall the inner filter

- Install after engaging the 2 claws at the upper part of the inner filter to this unit.

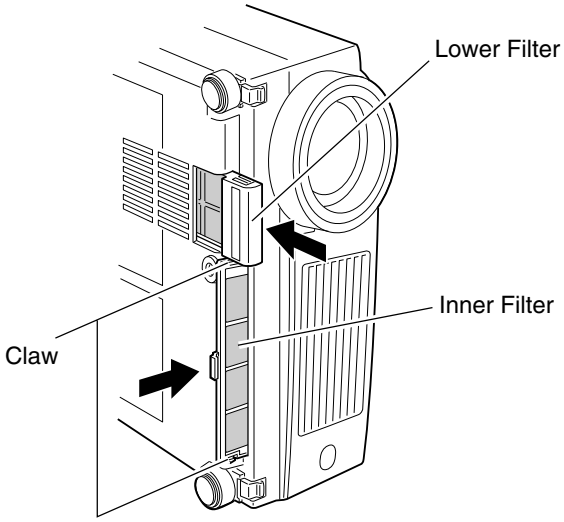

What to do when these messages are displayed

Message	Cause (Details)
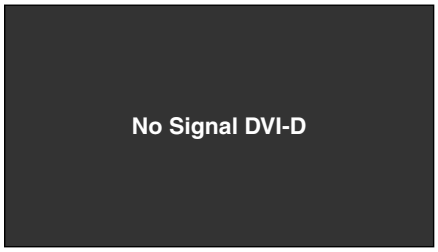	No device is connected to the DVI terminal. The terminal is connected but there is no signal output. → Input the video signals.
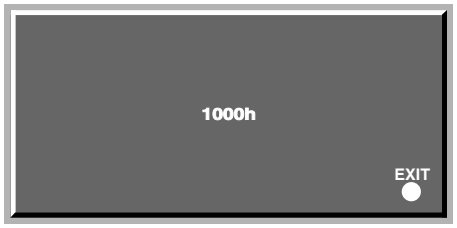	When lamp time reaches 1000 hours → A message indicating “1000 h” will be displayed on the screen. ● Press the [EXIT] button to clear the display.
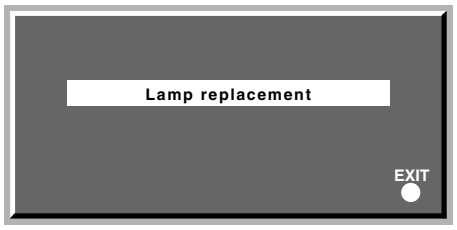	At the moment when the accumulated lamp time reaches 1900 hours, a “Lamp replacement” message will be displayed. In addition, when the accumulated lamp time reaches between 1900 hours to 2000 hours, the “Lamp replacement” message will be displayed each time the projector is turned on. ● The message can be cleared by pressing the [EXIT] button or displaying the menu. → Get ready a new lamp (lamp unit) in advance or replace as soon as possible.
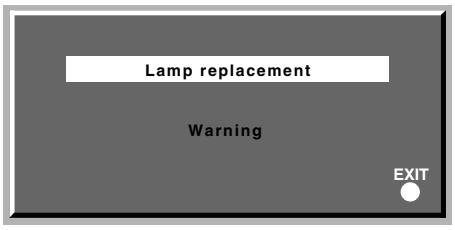	The “Warning” word appears and blinks when the accumulated lamp time exceeds 2000 hours. The message can be cleared by pressing the [EXIT] button. However, the same message will reappear every hour. When the accumulated lamp time exceeds 2000 hours, the unit cannot be turned on again once it is turned off. If continuous projection is performed after 2000 hours, the unit will shut down upon exceeding 2010 hours and projection will be disabled. → Install a new lamp (lamp unit) and reset the lamp time. (☞ Pages 28 - 30)

Warning Indication

■ About warning indicators

If abnormality occurs in this unit during projection, the warning mode will be triggered and the type of abnormality will be indicated by a combination of indicators displayed on the control panel. This unit will then automatically stop projection and run the cooling fan for about 90 seconds.

No.	Indicator				Warning
	[LAMP]	[TEMP]	[STAND BY]	[OPERATE]	
1	Blinking		Blinking		Lamp does not light up and unit is unable to project
2	Blinking ← Blinking Simultaneously → Blinking				Lamp turned off during projection Lamp usage time has exceeded 2010 hours
3	Blinking	Blinking			Circuits are not functioning properly (Circuit Operation Error)
4	Blinking ← Blinking Alternately → Blinking				Lamp cover is not installed
5		Blinking			Internal temperature is abnormally high (Internal Temperature Error)
6		Blinking	Blinking		Temperature at air inlets are high (External Temperature Error)
7	Blinking	Blinking	Blinking	Blinking	Inner fan has stopped (Fan Locked)

- For details on individually blinking indicators, please refer to Page 28.

■ Actions to be taken upon warning indications

Please follow the procedures below.

For Nos. 1-3

No. 1: Perform procedures to turn on/off the power again.

No. 2: After checking if an impact shock has not occurred during operation, perform procedures to turn on/off the power again.
When the warning on lamp time is displayed, remove the power plug when the [STAND BY] indicator is still on, followed by installing a new lamp.

No. 3: Perform procedures to turn on/off the power again.

For Nos. 4-7

Remove the power plug when the [STAND BY] indicator is on. After that, check No. 4 - No. 7.

No. 4: Ensure that the lamp unit is correctly mounted onto this unit. Next, ensure that the lamp cover is correctly mounted. After that, restart according to the basic operation procedures.

No. 5: Check that nothing is blocking the air inlets, and wait until the inside cools down. After that, restart according to the basic operation procedures.

No. 6: Check the ambient temperature. If it is normal, leave the unit until it cools down. After that, restart according to the basic operation procedures.

No. 7: Leave the unit until it cools down. After that, restart according to the basic operation procedures.

If the warning indication is displayed again, wait for the cooling fan to stop. Check that the [STAND BY] indicator is on, followed by removing the plug from the power outlet. Call your authorized dealer for repair.

Troubleshooting

Before sending the unit to your authorized dealer for repair, check the following points.

Symptom	Probable Cause	Corrective Action	Reference Page
Power is not supplied.	• Is the power cord disconnected?	• Insert the power cord (plug) firmly.	19
	• Is the lamp cover properly shut?	• Remove the plug when the [STAND BY] indicator is on. Close the lamp cover properly and insert the plug again.	21, 29
	• Is the filter cover properly shut?	• Remove the plug when the [STAND BY] indicator is on. Close the filter cover properly and insert the plug again.	21, 31
	• Has the lamp life expired? (Has the lamp usage time reached 2000 hours?)	• Remove the plug when the [STAND BY] indicator is on. Install a new lamp (lamp unit) and insert the plug again. Reset the lamp time after installing a new lamp (lamp unit).	11, 28-30
Light is not emitted or light is dim.	• Is the lens cap removed?	• Remove the lens cap.	19
	• Is the lamp near exhaustion?	• Check the lamp time on the menu. Prepare a new lamp (lamp unit) or replace as soon as possible when the lamp (lamp unit) is near exhaustion.	22, 25, 28-30
Unit works when power is turned on but stops abruptly after a few minutes.	• Are the air suction openings (air inlets) and exhaust vents blocked?	• Remove the plug when the [STAND BY] indicator is on. Remove any blocking object and insert the plug again.	7, 8, 14
	• Are the filters dirty?	• Clean the filters.	31
Video image does not appear	• Are devices properly connected?	• Connect devices correctly.	18
	• Are signals being output from the connected devices?	• Set connected devices correctly.	——
	• Is the video image temporarily turned off when the [HIDE] button is being pressed?	• Press the [HIDE] button to display the video image again.	21
Video image is fuzzy.	• Is the focus correctly adjusted?	• Adjust accordingly using the focus ring.	20
	• Is the unit placed too near or too far away from the screen?	• Set the unit at a correct distance from the screen.	16
Video images are missing.	• Has setting been performed for screen mask?	• Set the “Mask” value in the “Set up” menu to “OFF”.	26
	• Has setting been performed for picture shift?	• Alter the “Picture Shift” value in the “Options” menu to ensure that images are not missing.	27
Remote control unit does not work.	• Are batteries installed correctly?	• Match the polarities (+ or -) correctly when inserting the batteries.	13
	• Are batteries exhausted?	• Replace with new batteries.	13
	• Is there an obstructive object between the remote control unit and remote sensor?	• Remove any obstructive objects.	17
	• Is the remote control held too far away from the screen?	• Hold the remote control closer to the sensor when using.	17

- This unit uses a microcomputer. External noise may cause it to malfunction. If this happens, turn off the power and remove the plug from the power outlet. Insert plug again into the outlet and check operation of the unit. (See Pages 20, 21 on how to turn on/off the power of the unit.)

Terminal Description

Pin Arrangement

■ RS-232C Terminal

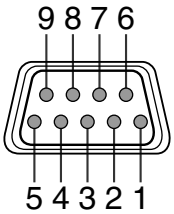

Pin No.	Signal Name	Pin No.	Signal Name
1	N/C	6	N/C
2	RD	7	N/C
3	TD	8	N/C
4	N/C	9	N/C
5	GND		

■ DVI Terminal

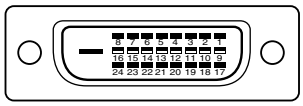

Pin No.	Signal Name	Pin No.	Signal Name
1	TMDS data 2-	13	N/C
2	TMDS data 2+	14	TMDS +5 V power supply
3	TMDS data 2/4 shield	15	Earth (+5 V)
4	N/C	16	Hot plug detection
5	N/C	17	TMDS data 0-
6	DDC clock	18	TMDS data 0+
7	DDC data	19	TMDS data 0/5 shield
8	N/C	20	N/C
9	TMDS data 1-	21	N/C
10	TMDS data 1+	22	TMDS clock shield
11	TMDS data 1/3 shield	23	TMDS clock +
12	N/C	24	TMDS clock -

TMDS = Transition Minimized Differential Signaling

DDC = Display Data Channel

RS-232C External Control

Control of this unit via a computer is possible by connecting the computer to this unit with a RS-232C cross cable (D-sub 9 pins). The commands to control this unit and the response data format against the received commands are explained here. For details, please consult your authorized dealer.

1. Communication Specifications

Communication specification for this unit are as follows:

Baud Rate	9600/19200 bps
Data Length	8 bit
Parity	None
Stop Bit	1 bit
Flow Control	None

2. Command Format

2-1. Command data format

When sending a control command to this unit, use the following data format:

Header | **ID** | **SP** | **Command** [**SP** | **Parameter**] **CR**

Header : Designates the head of data and the data type.
! (21h): Assigns command to the projector
? (3Fh): Query to the projector (Asking command)

ID :1: Identification number of the projector (Factory setting is 1)

SP : Designates the delimiter for ID, Command and Parameter. (20h)

CR : Designates the terminal of the data. (0Dh)

*[ ] is not necessary for Asking command.

2-2. Response data format

Upon executing a control command it has received, this unit sends back the following response data to the computer:

Header | **ID** | **SP** | **Normal Termination Status** [**SP** | **Parameter**] **CR**

Header : Designates the head of the data.
@ (40h): Fetches data from the projector

ID : 1: Identification number of the projector (Factory setting is 1)

SP : Designates the delimiter for ID, Command and Parameter. (20h)

Normal Termination Status : 0 (30h)

CR : Designates the terminal of the data. (0Dh)

2-3. Parameters used for the data format

The following 3 types of parameters are used for command and response data:
① Numeric value ② ON/OFF ③ Special parameters

Each parameter is as follows:

① **Numeric value**
A 2-byte hexadecimal value (sign included) is represented by a set of 4-digit (4-byte) characters.
Assignable range: 8000H to 7FFFH

② **ON/OFF**
Shows the status (ON or OFF) of the unit, such as POWER and HIDE.

Character	Hex	Meaning
0	30	OFF
1	31	ON

③ **Special parameters**

Parameters for input video image format

Character	Hex	Meaning
0	30	60p
1	31	50p

Operation mode parameters

Character	Hex	Meaning
0000	30h 30h 30h 30h	Standby mode
0001	30h 30h 30h 31h	Power-on mode
0002	30h 30h 30h 32h	Cool down mode
0004	30h 30h 30h 34h	Emergency mode

3. External control command table

Function	Command	Asking		Data Type		
		Power On	ELSE	Numeric Value	ON/OFF	Special Data
Operate	U0F	×	×	×	○	×
HIDE	U00	○	×	×	○	×
Left/Right Reversal	U17	○	×	×	○	×
Top/Bottom Inversion	U18	○	×	×	○	×
Operation Mode	Z03	○	○	×	×	○

Operation mode: Only Asking command is possible

Specifications

■ **Model Name/ Article Name**	DLA-HD2KU/DLA-HD2KE D-ILA Home Theater Projector
■ **Emission Method**	D-ILA*1(Reflective Active Matrix Principle)
■ **Display Panel/Size**	D-ILA Device*2/0.82" (1920 pixels x 1080 pixels) x 3 (Total no. of pixels: Approx. 6,220,000)
■ **Projection Lens**	x 1.3 zoom lens (1.8:1 to 2.35:1) (Zoom/Focus adjustment: manual)
■ **Light-source Lamp**	250 W Ultra-high Pressure Mercury Lamp [Part No.: BHL5006-S / Rating: 250 W]
■ **Screen Size**	Approx. 40" to 200" (Aspect ratio: 16:9)
■ **Projection Distance**	Approx. 1.5 m to 12 m
■ **Input Signal**	1080/60p signal, 1080/50p signal
■ **Resolution**	1920 dots x 1080 dots
■ **Input Sync Frequency**	Horizontal : 56.25 kHz, 67.43 kHz, 67.5 kHz Vertical : 50 Hz, 59.94 Hz, 60 Hz
■ **Input Terminals** **VIDEO IN** **CONTROL**	DVI 1-line, DVI-D (single-24pin) terminal, HDCP-compatible*3 RS-232C 1-line, D-sub 9 pin x 1 (External control) SERVICE 1-line, stereo mini-jack x 1 (For Service)
■ **Output Terminal** **CONTROL**	SYNC OUT 1-line, stereo mini-jack x 1 (For Service)
■ **Power Requirements**	AC 100 V - 240 V, 50 Hz/60 Hz
■ **Rated Power**	3.5 A (100V AC) - 1.4 A (240V AC)
■ **Operation Environment**	Temperature 41 °F to 95 °F (+5 °C to +35 °C) Humidity 20% to 80% (No condensation) Storage Temperature 14 °F to 140 °F (-10 °C to +60 °C)
■ **Dimensions** **(Width x Height x Depth)**	Approx. 11 $^{7}/_{10}$" x approx. 5 $^{3}/_{10}$" x approx. 14 $^{1}/_{5}$" (Approx. 298 mm x 134 mm x 360 mm) (Excluding carrying handle, lens and protrusion portion)
■ **Mass**	Approx. 13.7 lbs (Approx. 6.2 kg)
■ **Accessories**	(☞ Page 6)

*1 D-ILA is the abbreviation for Direct drive Image Light Amplifier.

*2 D-ILA devices are manufactured using extremely high-precision technology. Pixel effectiveness is 99.99%. Only 0.01% or less of the pixels would either not lit up or remain permanently lit up.

*3 The image of DVI-D input terminal may not be displayed due to HDCP specification change.

- Design and specifications are subject to change without prior notice.
- Please note that some of the pictures and illustrations may have been abridged, enlarged or contextualized in order to aid comprehension. Images may differ from the actual product.

■ Dimensions (Unit: mm)

Top

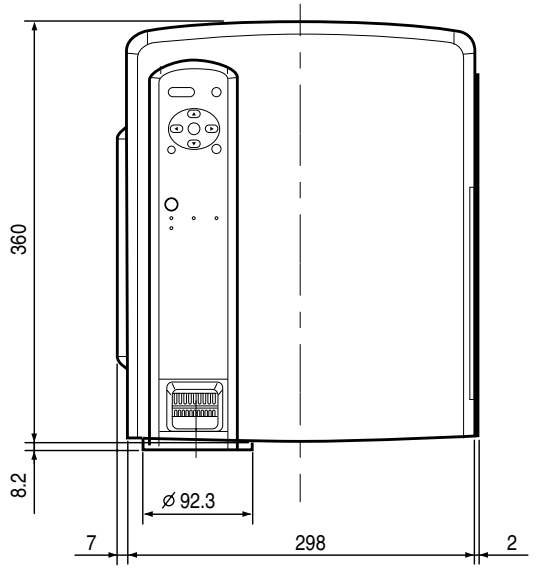

Bottom

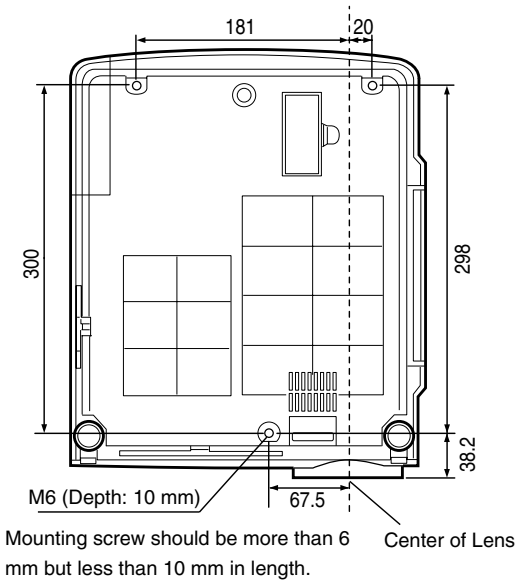

Front

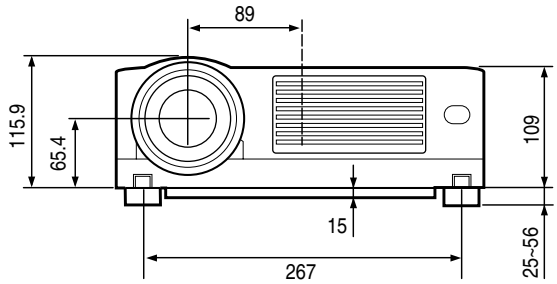

Side

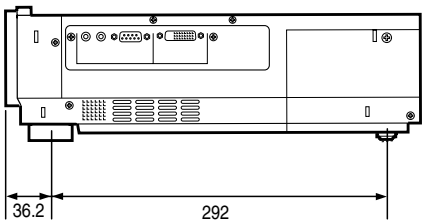

DLA-HD2KU/DLA-HD2KE

D-ILA® HOME THEATER PROJECTOR

JVC®

VICTOR COMPANY OF JAPAN, LIMITED

© 2004 VICTOR COMPANY OF JAPAN, LIMITED

Printed in Japan
0504-SW-VP