myprojectorlamps.com

The most trusted, dependable name in projector lamp sales.

http://www.myprojectorlamps.com

http://www.myprojectorlamps.ca

http://www.myprojectorlamps.eu

The following projector manual has not been modified or altered in any way.

JVC®

D-ILA® PROJECTOR

MANUEL D'INSTRUCTIONS : PROJECTEUR D-ILA®

DLA-G150CLU

INSTRUCTIONS

ENGLISH

FRANÇAIS

For Customer Use:
Enter below the Serial No. which is located on the side panel of the cabinet. Retain this information for future reference.

Pour l'utilisateur:
Inscrivez ci-dessous le No de série situé sur le panneau latéral du coffret de l'appareil. Conservez cette information à titre d'information.

Model No.
No de modèle DLA-G150CLU

Serial No.
No de série

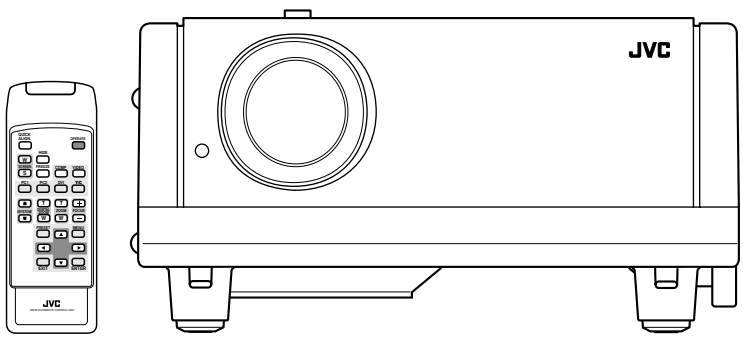

(Lenses are optional)

LCT1123-001B

INSTRUCTIONS

D-ILA® PROJECTOR

DLA-G150CLU

ENGLISH

Thank you for purchasing this projector. Before using it, read and follow all instructions carefully to take full advantage of the projector's capabilities.

SAFETY PRECAUTIONS

IMPORTANT INFORMATION

WARNING :

TO PREVENT FIRE OR SHOCK HAZARDS, DO NOT EXPOSE THIS APPLIANCE TO RAIN OR MOISTURE.

CAUTION :

To reduce the risk of electric shock, do not remove cover.
Refer servicing to qualified service personnel.

This projector is equipped with a 3-blade grounding-type plug to satisfy FCC rule. If you are unable to insert the plug into the outlet, contact your electrician.

FCC INFORMATION (U.S.A. ONLY)

CAUTION :

Changes or modification not approved by JVC could void the user's authority to operate the equipment.

NOTE :

This equipment has been tested and found to comply with the limits for a Class B digital devices, pursuant to Part 15 of the FCC Rules. These limits are designed to provide reasonable protection against harmful interference in a residential installation. This equipment generates, uses, and can radiate radio frequency energy and, if not installed and used in accordance with the instructions, may cause harmful interference to radio communications. However, there is no guarantee that interference will not occur in a particular installation. If this equipment does cause harmful interference to radio or television reception, which can be determined by turning the equipment off and on, the user is encourage to try to correct the interference by one or more of the following measures:

- Reorient or relocate the receiving antenna.
- Increase the separation between the equipment and receiver.
- Connect the equipment into an outlet on a circuit different from that to which the receiver is connected.
- Consult the dealer or an experienced radio/TV technician for help.

About burning-in of the D-ILA device

Do not allow the same still picture to be projected for a long time or an abnormally bright video picture to be projected. Do not project video images with high-intensity or high-contrast on a screen. The video image could be burned in to the D-ILA device.
Use special care when projecting video games or computer program images. There is no problem with ordinary video-cassette playback images.

About the installation place

Do not install the projector in a place that cannot support its weight securely.
If the installation place is not sturdy enough, the projector could fall or overturn, possibly causing personal injury.

IMPORTANT SAFEGUARDS

Electrical energy can perform many useful functions. This unit has been engineered and manufactured to assure your personal safety. But **IMPROPER USE CAN RESULT IN POTENTIAL ELECTRICAL SHOCK OR FIRE HAZARD**. In order not to defeat the safeguards incorporated into this product, observe the following basic rules for its installation, use and service. Please read these "Important Safeguards" carefully before use.

- All the safety and operating instructions should be read before the product is operated.
- The safety and operating instructions should be retained for future reference.
- All warnings on the product and in the operating instructions should be adhered to.
- All operating instructions should be followed.
- Place the projector near a wall outlet where the plug can be easily unplugged.
- Unplug this product from the wall outlet before cleaning. Do not use liquid cleaners or aerosol cleaners. Use a damp cloth for cleaning.
- Do not use attachments not recommended by the product manufacturer as they may be hazardous.
- Do not use this product near water. Do not use immediately after moving from a low temperature to high temperature, as this causes condensation, which may result in fire, electric shock, or other hazards.
- Do not place this product on an unstable cart, stand, or table. The product may fall, causing serious injury to a child or adult, and serious damage to the product. The product should be mounted according to the manufacturer's instructions, and should use a mount recommended by the manufacturer.
- When the product is used on a cart, care should be taken to avoid quick stops, excessive force, and uneven surfaces which may cause the product and cart to overturn, damaging equipment or causing possible injury to the operator.

- Slots and openings in the cabinet are provided for ventilation. These ensure reliable operation of the product and protect it from overheating. These openings must not be blocked or covered. (The openings should never be blocked by placing the product on bed, sofa, rug, or similar surface. It should not be placed in a built-in installation such as a bookcase or rack unless proper ventilation is provided and the manufacturer's instructions have been adhered to.)

  For proper ventilation, separate the product from other equipment, which may prevent ventilation and keep / distance more than 23-5/8" (60 cm).

– This product should be operated only with the type of power source indicated on the label. If you are not sure of the type of power supply to your home, consult your product dealer or local power company.

– This product is equipped with a three-wire plug. This plug will fit only into a grounded power outlet. If you are unable to insert the plug into the outlet, contact your electrician to install the proper outlet. Do not defeat the safety purpose of the grounded plug.

– Power-supply cords should be routed so that they are not likely to be walked on or pinched by items placed upon or against them. Pay particular attention to cords at doors, plugs, receptacles, and the point where they exit from the product.

– For added protection of this product during a lightning storm, or when it is left unattended and unused for long periods of time, unplug it from the wall outlet and disconnect the cable system. This will prevent damage to the product due to lightning and power line surges.

– Do not overload wall outlets, extension cords, or convenience receptacles on other equipment as this can result in a risk of fire or electric shock.

– Never push objects of any kind into this product through openings as they may touch dangerous voltage points or short out parts that could result in a fire or electric shock. Never spill liquid of any kind on the product.

– Do not attempt to service this product yourself as opening or removing covers may expose you to dangerous voltages and other hazards. Refer all service to qualified service personnel.

– Unplug this product from the wall outlet and refer service to qualified service personnel under the following conditions:

  a) When the power supply cord or plug is damaged.

  b) If liquid has been spilled, or objects have fallen on the product.

  c) If the product has been exposed to rain or water.

  d) If the product does not operate normally by following the operating instructions. Adjust only those controls that are covered by the Operation Manual, as an improper adjustment of controls may result in damage and will often require extensive work by a qualified technician to restore the product to normal operation.

  e) If the product has been dropped or damaged in any way.

  f) When the product exhibits a distinct change in performance – this indicates a need for service.

– When replacement parts are required, be sure the service technician has used replacement parts specified by the manufacturer or with same characteristics as the original part. Unauthorized substitutions may result in fire, electric shock, or other hazards.

– Upon completion of any service or repairs to this product, ask the service technician to perform safety checks to determine that the product is in proper operating condition.

– The product should be placed more than one foot away from heat sources such as radiators, heat registers, stoves, and other products (including amplifiers) that produce heat.

– When connecting other products such as VCR's, and personal computers, you should turn off the power of this product for protection against electric shock.

– Do not place combustibles behind the cooling fan. For example, cloth, paper, matches, aerosol cans or gas lighters that present special hazards when over heated.

– Do not look into the projection lens while the illumination lamp is turned on. Exposure of your eyes to the strong light can result in impaired eyesight.

– Do not look into the inside of this unit through vents (ventilation holes), etc. Do not look at the illumination lamp directly by opening the cabinet while the illumination lamp is turned on. The illumination lamp also contains ultraviolet rays and the light is so powerful that your eyesight can be impaired.

– Do not drop, hit, or damage the light-source lamp (lamp unit) in any way. It may cause the light-source lamp to break and lead to injuries. Do not use a damaged light-source lamp. If the light-source lamp is broken, ask your dealer to repair it. Fragments from a broken light-source lamp may cause injures.

– Xenon gas is enclosed with high pressure inside the light-source lamp (lamp unit) of this projector. If you drop or impart a shock to the lamp, or discard it as is, there is the possibility of explosion, leading to personal injury. Use special care when handling the lamp. For any unclear points, consult your product dealer.

– Do not "ceiling-mount" the projector to a place which tends to vibrate; otherwise, the attaching fixture of the projector could be broken by the vibration, possibly causing it to fall or overturn, which could lead to personal injury.

– Use only the accessory cord designed for this product to prevent shock.

  The power supply voltage rating of this product is AC 120 V, the power cord attached conforms to the following power supply voltage. Use only the power cord designated by our dealer to ensure Safety and EMC.

  When it is used by other power supply voltage, power cable must be changed.

  Ensure that the power cable used for the projector is the correct type for the AC outlet in your country.

  Consult your product dealer.

Power cord

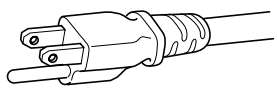

Power supply voltage: AC 120 V

*** DO NOT allow any unqualified person to install the unit.**

Be sure to ask your dealer to install the unit (eg. attaching it to the ceilling) since special technical knowledge and skills are required for installation.
If installation is performed by an unqualified person, it may cause personal injury or electrical shock.

ENGLISH

Contents

SAFETY PRECAUTIONS 2
Contents 4
Accessories 5
Controls and Features 6
Front Side / Top Surface / Right Side 6
Left-hand Side / Rear Side.....7
Bottom Surface 8
Control Panel on the Projector.....9
Connector Panel 11
Remote Control Unit.....12
Installing Batteries.....14
Precautions for using batteries.....14
Installing the Projector..... 15
Precautions for Installation.....15
Adjusting the Inclination of the Projector.....16
Installing the Projector against the Screen.....17
Projection Distance and Screen Size.....18
Setting the Amount of Lens Shifting.....19
Effective Range and Distance of the Remote Control Unit.....20
Setting the Position Selecting Screw for Ceiling Mounting 21
When installing (adjusting/setting) the unit.....21
Connecting to Various Devices.... 22
Signals that Can Be Input to the Projector.....22
Connecting to Video Devices.....24
Connecting to Hi-Vision Devices/DVD Players 25
Connecting to Other Devices 26
Connecting to Devices which Control the Projector.....27
Connecting to Computer Devices 28
Connecting to DVI.....29
How to attach the ferrite core.....29
Connecting the Power Cord.....30
Removing the Lens Cap.....30
Basic Operations 31
1. Turning on the Power.....32
2. Select the Input source to be Projected 33
3. Adjust the Screen Size (Zooming) 34
4. Adjust Focus 34
5. Setting the Screen Aspect Ratio 34
Turning off Image (HIDE).....35
Removing the Trapezoidal Distortion of the Image 35
Quick Alignment Function (QUICK ALIGN.).....36
Displaying a Still Picture (FREEZE).....37
Zooming a Part of the Image (DIGITAL ZOOM T/W) 37
Menu Operations 38
Basic Menu Operation.....43
Changing the Color System (Video Menu Mode Only) 45
Changing the Language Display.....46
Changing the Screen aspect ratio/HDTV format (Video Menu Mode Only) 46
Adjusting Tracking/Phase 47
Setting for Watching Image Software (Video Menu Mode Only) 48
Adjusting Picture Quality 49
Adjusting Color temperature..... 50
Adjusting the Video Screen/Menu Position 51
Changing the Image Gamma/Aspect Ratio (Video Menu Mode Only) 52
Changing the Image Size - Resize Function (PC Menu Mode Only)..... 53
Changing the Clamp pulse position (PC Menu Mode Only)..... 53
Setting and Adjusting Other Functions (OPTIONS)..... 54
Getting Information..... 56
Replacing the Fuse 57
Replacing the Light-Source Lamp 58
Cleaning and Replacing the Filter Cover 63
Troubleshooting.....64
Warning Indication.....66
Warning Messages 67
Specifications.....70
Outside dimensions..... 72
Pin assignment (Specifications for terminals) 73
RS-232C external control 74
Appendix.....76

Accessories

The following accessories are included with this projector. Check for them; if any item is missing, please contact your dealer.

■ **Remote control unit (RM-M160G)**

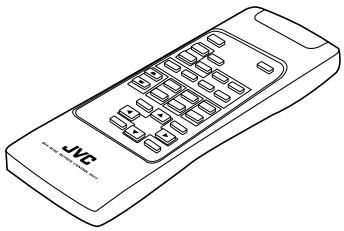

■ **AA/R6-size dry cell battery (×2)**
(for checking operation)

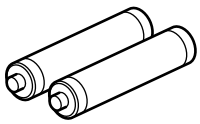

■ **Power cord**
[approx. 8.2 ft (approx. 2.5 m)]

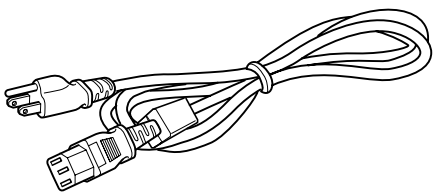

■ **Ferrite core (×2)**

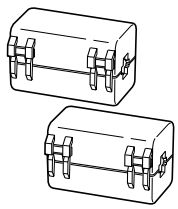

■ **Personal computer connection cable**
[approx. 6.56 ft (approx. 2 m)]
(D-sub, 3-row 15 pin)

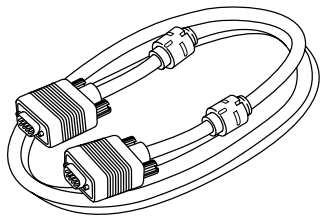

■ **Video cable**
[approx. 6.56 ft (approx. 2 m)]

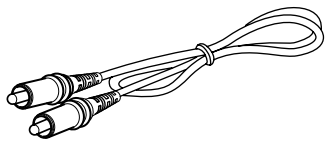

■ **Conversion adapter for Mac**
(for Macintosh)

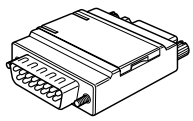

■ **BNC-RCA Conversion plug**

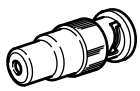

■ **Hex. wrench**

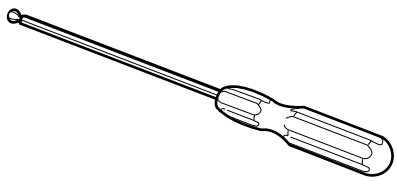

ENGLISH

Controls and Features

Front Side / Top Surface / Right Side

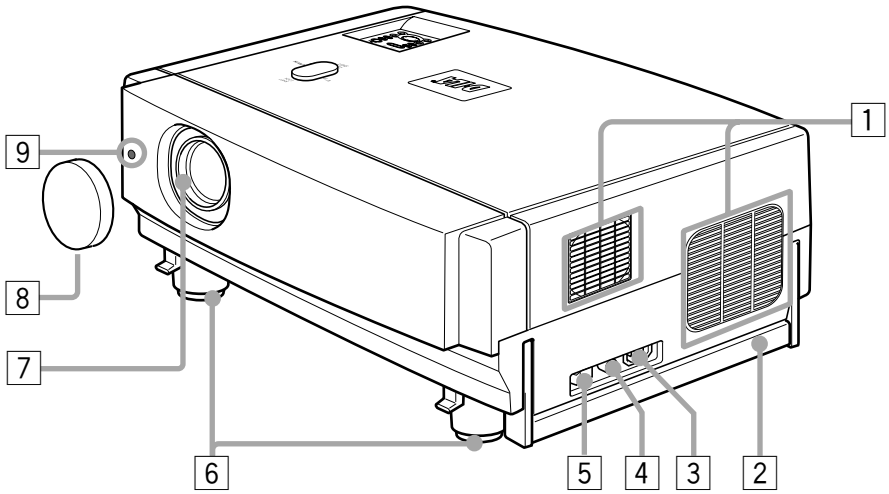

1 **Exhaust vents**
Vents for cooling fans through which warm air comes out.

CAUTION

- Do not block the exhaust vents, or heat will build up inside, possibly causing a fire. Also, do not touch the vents, or this could give you a low-temperature burn.

2 **Carrying handle**
Raise this handle when carrying the projector.

CAUTIONS

- When carrying the projector, do not transmit shocks to it. Also be careful to keep it balanced.
- Do not carry it while the light-source lamp is on or the cooling fan is operating. This could cause personal injury.

3 **AC IN (power input) terminal**
This is the power input terminal where the supplied power cord is connected. For details, refer to page 30.

4 **Fuse holder**
A fuse rated 12A/250V is installed. (Power source protection)
To replace the fuse, refer to page 57.

CAUTION

- When replacing the fuse, use the same rating and type. Otherwise, a fire may occur and/or the projector may be damaged.

5 **MAIN POWER switch**
This is the main power switch. When it is turned on, the projector goes into stand-by state, and the STAND BY indicator on the control panel comes on. (Refer to page 32.)
ON [I]: The main power turns on.
OFF [O]: The main power turns off.

6 **Adjustable feet (for adjusting the height and angle)**
By extending the feet, the projector angle can be adjusted up to +7°.
For details, refer to “Adjusting the Inclination of the Projector” on page 16.

7 **Lens**
One of the optional lens units should be installed before using the projector.
A lens-hole blind cover (black one) is installed when the projector is shipped from the factory.
For details on the types of optional lenses available, refer to page 18.

CAUTION

- Please consult your authorized dealer or service center for information about attaching an optional lens.

8 **Lens cap**
This is the lens cap provided for the optional lens.
When you are not using the projector, attach the lens cap to protect the lens from dirt or being damaged. (Refer to page 30.)

9 **Remote sensor**
When operating with the remote control, aim it toward this sensor. (Refer to page 20.)

Left-hand Side / Rear Side

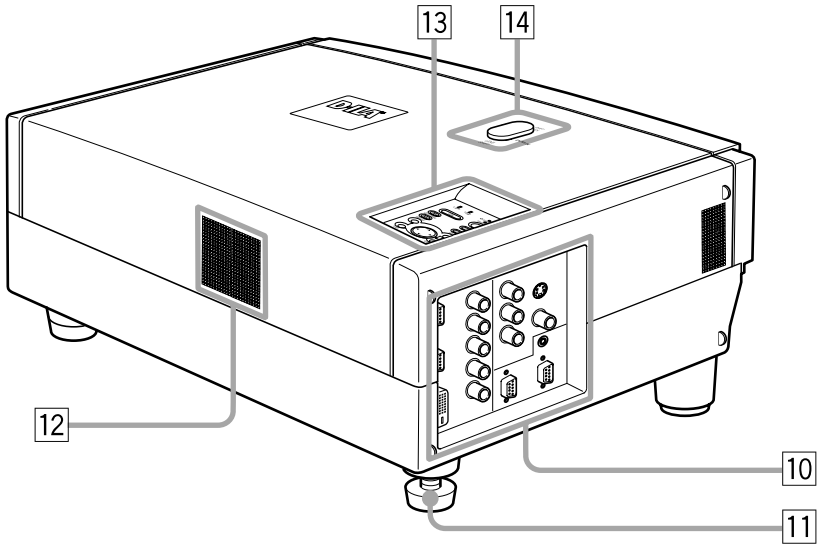

10 **Connector panel**
For details, refer to “Connector Panel” on page 11.

11 **Rear adjustable foot (for leveling the projector)**
It is set at the shortest position when shipped from the factory. Turn the foot to make the projector level. Adjustment can be made in the range of +1.5° and –1.5° from the horizontal position. For details, refer to “Adjusting the Inclination of the Projector” on page 16.

12 **Air inlet**
This is the air inlet. Do not cover or obstruct this slot.

13 **Control panel**
For details, refer to “Control Panel on the Projector” on page 9.

14 **Lens shift knob cap**
When you have mounted a lens that uses the lens shift function, open this cap and rotate the lens shift knob to move the lens position. For more information, refer to “Setting the Amount of Lens Shifting” on page 19.

ENGLISH

Bottom Surface

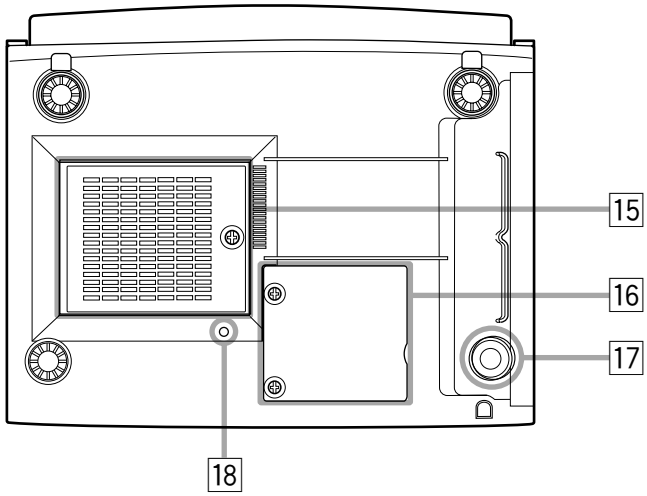

15 **Air inlet (filter)**
Air is taken in through the filter to cool the light-source lamp. If the filter is blocked or if something that obstructs the flow of air is placed around the projector, heat may build up inside and could cause a fire. For required space, refer to “Precautions for Installation” on page 15.

CAUTIONS

- Be careful as paper, cloth or soft cushion could be drawn in if placed nearby. Do not block the filter, or heat may build up and could cause a fire.
- Clean the filter periodically. For details, refer to “Cleaning and Replacing the Filter Cover” on page 63. Deposition of dirt on the filter reduces the cooling effect, causing heat to build up inside, which could cause a fire or malfunction.

16 **Opening for replacing the light-source lamp**
For replacing the light-source lamp, refer to “Replacing the Light-Source Lamp” on page 58.

17 **Fixing foot**

18 **Position selecting screw for ceiling mounting**
When using the projector in an upside-down, ceiling-mounted position (inverted top-to-bottom and right-to-left), the “position selecting screw for ceiling mounting” must be turned to switch to ceiling mounting.
This will correct variance in color images (shading), which otherwise would occur in ceiling mounting.
For more information, refer to “Setting the Position Selecting Screw for Ceiling Mounting” on page 21.

CAUTION

- To ceiling-mount and adjust the projector, special expertise and technique are necessary. Be sure to ask your dealer or specialist to perform this work.

Control Panel on the Projector

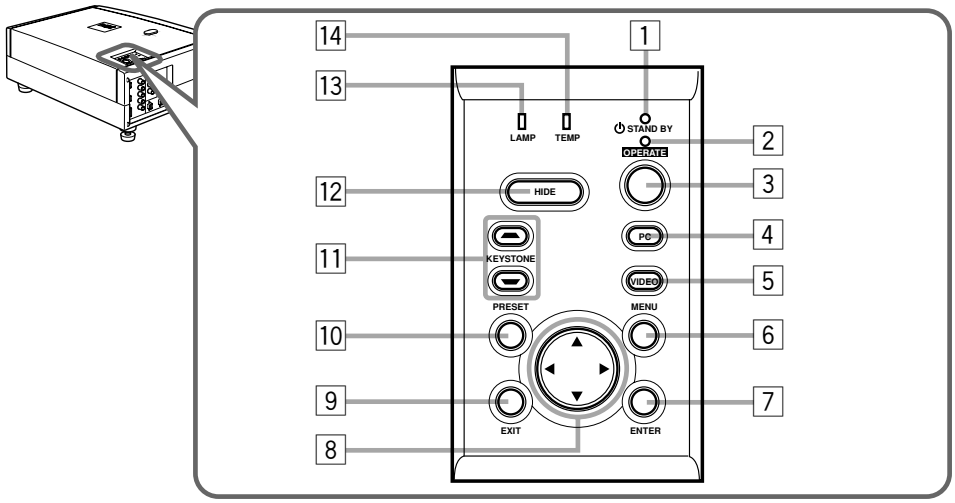

1 **STAND BY Indicator**

ON : When in stand-by mode.
Blinking :When in cool-down mode.

Memo

About the cool-down mode:
This projector has a function to cool down the heated lamp for a fixed period of time (approx. 120 seconds) after projection is finished. This feature is referred to as the cool-down mode. The purpose of the cool-down mode is to prevent inner parts from being deformed or broken by heat from the heated lamp as well as to prolong the life of the lamp.

CAUTIONS

- Do not turn off the MAIN POWER switch while in the cool-down mode.
- Do not place the projector on its side or stand it upright while in the cool-down mode; this may block the vents.

2 **OPERATE indicator**

ON : When the projector is in operation (projecting).
OFF : When the projector is not in operation (not projecting).

3 **OPERATE button**

When the projector is in the stand-by mode, press this button one second or more, and the projector is turned on, causing the OPERATE indicator to light.
Press it one second or more again, and the projector goes into the cool-down mode, then stand-by mode. (Refer to page 32.)

** You cannot use the OPERATE button for about one minute after the lamp blinks. Press the button after a minute or longer has elapsed.*

Memo

While in the cool-down mode (STAND BY indicator is blinking):
Even if you press the OPERATE button, the projector is not turned on. Wait until the projector enters stand-by mode (STAND BY indicator stays lit).

4 **PC button**

Use this button to select a device connected to the PC 1, PC 2 or DVI terminals. Each time you press the button, the selection alternates among PC 1, PC 2 and DVI.

** "PC1" , "PC2" or "DVI" will be displayed on the top right of the projected image. (This function can be disabled by the menu.)*

5 **VIDEO button**

Use this button to select a device such as a video deck connected to the AV IN (Y/C, VIDEO or COMP) terminal of the projector. Each time you press the button, the selection alternates among Y/C, VIDEO and COMP.

** "Y/C", "VIDEO" or "COMP" will be displayed on the top right of the projected image. (This function can be disabled by the menu.)*

6 **MENU button**

Use this button to enter or exit the menu mode. The main menu appears or disappears at the screen. For details, refer to "Basic Menu Operation" on page 43.

7 **ENTER button**

This button will be used in the menu mode. Use to display the hierarchical menus. Also use when "ENTER" is displayed against the item on the menu screen or when the "All reset" selection is confirmed. For details, refer to "Basic Menu Operation" on page 43.

8 **Cursor buttons ▲/▼/◄/►**

These buttons will be used in the menu mode to select an item, or to set or adjust the value. For details, refer to "Basic Menu Operation" on page 43.

ENGLISH

9 **EXIT button**

This button will be used in the menu mode to return to the previous menu. When the main menu is displayed, this button will cause the menu to disappear. For details, refer to “Basic Menu Operation” on page 43.

10 **PRESET button**

This PRESET button only works as a reset button for the direct button adjustment of the KEYSTONE button of the control panel and the DIGITAL ZOOM button of the remote control. When adjusting the keystone or digital zoom (when the setting is displayed on the screen) the adjusted value is reset to that which was set when the projector was shipped from the factory. Of the menu items, this button only works for the keystone setting screen.

11 **KEYSTONE ▬/▲ buttons**

Use these buttons to correct a trapezoidal distortion of the projected image. (Refer to page 35.)

12 **HIDE button**

Use this button to turn off the image on the screen temporarily. Pressing it again restores the image to resume. (Refer to page 35.)

13 **LAMP indicator**

ON : After the light-source lamp has been used for more than approx. 900 hours. (NORMAL only)

Blinking : After the light-source lamp has been used for more than approx. 1000 hours (1900 hours in the LPC or LOC mode). Replace the light-source lamp. Refer to “Replacing the Light-Source Lamp” on page 58 or page 59.

14 **TEMP indicator**

Blinking : The temperature inside the projector has risen abnormally.

Note

- While the TEMP indicator is blinking (during abnormal temperature), the power is automatically cut off.

Connector Panel

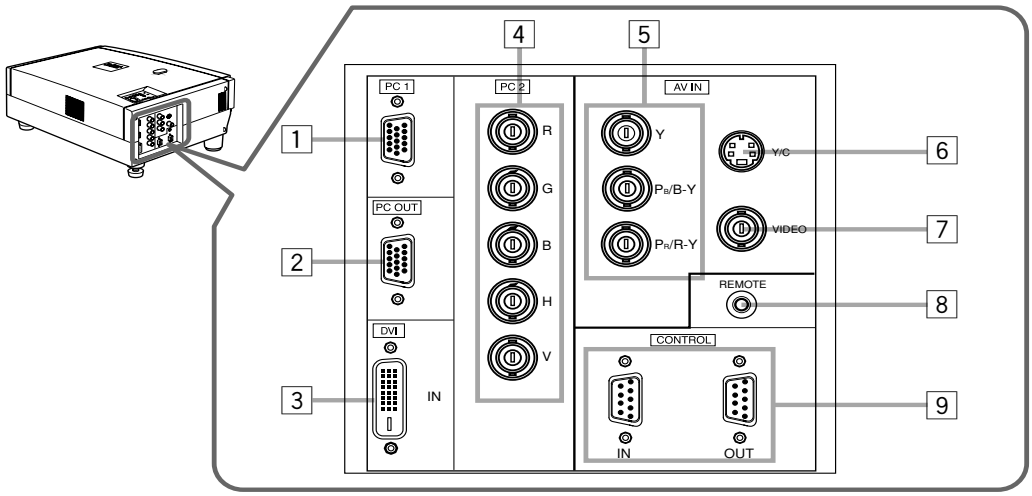

1 **PC (computer) 1 input terminal (D-sub 3-row 15 pin)**
This is an input terminal dedicated to computer signals (RGB video signals and sync signals).
Connect the display output terminal of the computer to this terminal. When a Macintosh computer is to be connected, use the supplied conversion adapter for Mac.

Note

- When computer-related signals are input, the uppermost edge of the image may appear to bow if the sync signal input is composite sync (Cs) or G on sync signal. In this case, use separate sync signals for vertical sync (V) and horizontal sync (H).

2 **PC (computer) OUT terminal (D-sub 3-row 15 pin)**
This is the terminal for video output from the monitor of the computer connected to PC1 or PC2.
The computer input signal projected on the screen is output. A display monitor can be used by connecting it to this terminal.

3 **DVI terminal [DVI-D 24 pin]**
This is the digital RGBHV input terminal.
- The Mac ADC is not supported.

4 **PC (computer) 2 input terminals (BNC × 5)**
These are multipurpose video input terminals that allow input of the following signals.
- Analog RGB signals, vertical sync (V) signals, and horizontal sync (H) signals / composite signals (Cs). (Devices which have analog RGB signal output terminals can be connected.)
  ** Input of external sync signals is automatically detected. Detection of H/V signals or Cs signals causes automatic switching to external sync. The priority order is H/V > Cs.*

Note

- When computer-related signals are input, the uppermost edge of the image may appear to bow if the sync signal input is composite sync (Cs) or G on sync signal. In this case, use separate sync signals for vertical sync (V) and horizontal sync (H).

5 **Component terminal**
Component signals (Y, B-Y, R-Y) or DTV-format (Y, P_B, P_R) signals. (Devices which have component output terminals can be connected.)
** For details about DTV-format signals (480i, 480p, 720p, 1080i) compatible with this unit, refer to page 22.*

6 **Y/C (S-video) input terminal (Mini DIN 4 pin)**
Connect this terminal to the S-video output terminal of a video deck, etc.
Attach the ferrite core (accessory) to the cable which is connected to the Y/C input terminal. (Refer to page 29.)

7 **VIDEO (composite video) input terminal (BNC)**
Connect this terminal to the composite video output terminal of a video deck, etc.

8 **REMOTE terminal (stereo mini jack)**
Connect an infrared remote control extension unit, etc. to this jack.
Attach the ferrite core (accessory) to the cable which is connected to the REMOTE terminal. (Refer to page 29.)
** For details, consult your dealer.*

9 **RS-232C CONTROL terminal IN/OUT (D-sub 9 pin)**
This is the RS-232C interface-specified terminal. The projector can be controlled by a computer connected externally.
** For details, refer to page 27 and 74.*

ENGLISH

Remote Control Unit

On the remote control, the same buttons as on the control panel of the projector are provided except for the following buttons. For the same buttons, operation is the same in principle.

For remote control only:
DIGITAL ZOOM T/W, QUICK ALIGN., FREEZE, ZOOM T/W, FOCUS +/–, SCREEN W/S, PC 1, PC 2, VIDEO, Y/C, DVI, COMP.

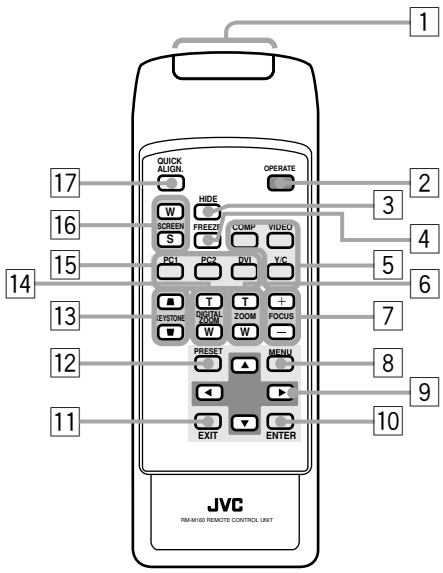

1 **Remote control's signal transmitter**

2 **OPERATE button**
When the projector is in the stand-by mode, press this button one second or more, and the projector is turned on, causing the OPERATE indicator to light.
Press it one second or more again, and the projector goes into the cool-down mode, then stand-by mode. (Refer to page 32.)
** The OPERATE button will not work for approximately 1 minute from when the light-source lamp is turned on. Use the button after approximately 1 minute.*

Memo

While in the cool-down mode (STAND BY indicator is blinking):
Even if you press the OPERATE button, the projector is not turned on. Wait until the projector enters stand-by mode (STAND BY indicator stays lit).

3 **HIDE button**
Use this button to turn off the image on the screen temporarily. Pressing it again makes the image to resume. (Refer to page 35.)

4 **FREEZE button**
During projection of an image on the screen, press this button to obtain a still picture.
To restore normal projection, press it again. (Refer to page 37.)
** Depending on the video signal source (UXGA, etc.), this button does not work.*

5 **VIDEO button**
Use this button to select a device such as a video deck connected to the AV IN terminal (VIDEO, Y/C or COMP input terminal) of the projector. Each time you press the button, the selection alternates among Y/C, VIDEO and DVI. (Refer to page 33.)
** "Y/C", "VIDEO" or "DVI" will be displayed on the top right of the projected image. (This function can be disabled by the menu.)*

6 **ZOOM T/W buttons**
Use these buttons to adjust the projected screen size.
T (Tele): The projected screen size decreases.
W (Wide):The projected screen size increases.

7 **FOCUS +/– buttons**
Use these buttons to adjust the focus of the projected video image.
+ : The focus point becomes more distant.
– : The focus point becomes nearer.

8 **MENU button**
Use this button to enter or exit the menu mode. The main menu appears or disappears at the screen. For details, refer to "Basic Menu Operation" on page 43.

9 **Cursor buttons ▲/▼/◄/►**
These buttons are used in the menu mode to select an item or to set or adjust the value. For details, refer to "Basic Menu Operation" on page 43.

10 **ENTER button**
This button is used in the menu mode. Use to display the hierarchical menus. Also use when "ENTER" is displayed against the item on the menu screen or when the "All reset" selection is confirmed. For details, refer to "Basic Menu Operation" on page 43.

11 **EXIT button**
This button is used in the menu mode to return to the previous menu. When the main menu is displayed, this button will cause the menu to disappear. For details, refer to "Basic Menu Operation" on page 43.

12 **PRESET button**
This PRESET button only works as a reset button for the direct button adjustment of the KEYSTONE button of the control panel and the DIGITAL ZOOM button of the remote control. When adjusting the keystone or digital zoom (when the setting is displayed on the screen) the adjusted value is reset to that which was set when the projector was shipped from the factory. Of the menu items, this button only works for the keystone setting screen.

13 **KEYSTONE ▲/▼ buttons**
Use these buttons to correct a trapezoidal distortion of the projected image. (Refer to page 35.)

14 DIGITAL ZOOM T/W buttons

A part of image can be magnified up to four times on the screen.
Each time the T or W button is pressed, the image is enlarged or the enlarged image is reduced by a certain degree. (Refer to page 37.)

** Images which are enlarged with the digital zoom become less clear.*
** Depending on the video signal source (UXGA, etc.), this button does not work.*

15 PC buttons

Use these buttons to select a device connected to the PC 1, PC 2 or DVI terminals. (Refer to page 33.)

** "PC 1", "PC 2" or "DVI" will be displayed on the top right of the projected image. (This function can be disabled using the menu.)*

16 SCREEN W/S buttons

Changes the projection screen size to [4:3] or [16:9].

17 QUICK ALIGN. (Quick Alignment) button

Use this button to automatically align "Horizontal and vertical position", "Tracking" and "Phase" for the projected image.
During the automatic alignment, "Quick Alignment" appears on the screen, and disappears after alignment is finished. (Refer to page 36.)

** The "Quick Alignment" function only works when the signal is input from the input terminal of PC 1, PC 2 or DVI. It does not work when the signal is input from the VIDEO IN terminal (VIDEO, Y/C and COMP. input terminal).*

CAUTION

- Automatic alignment with the quick alignment function should be carried out on a bright still-picture. This function may not work correctly on a dark picture or motion-picture. If adjustment with this function is not satisfactory, adjust "Horizontal and vertical position", "Tracking" and "Phase" in the menu mode.

ENGLISH

Installing Batteries

Install batteries in the remote control. If the remote control has started to work erratically, replace the batteries.

1 Open the back cover.

Open the back cover in the direction of the arrow.

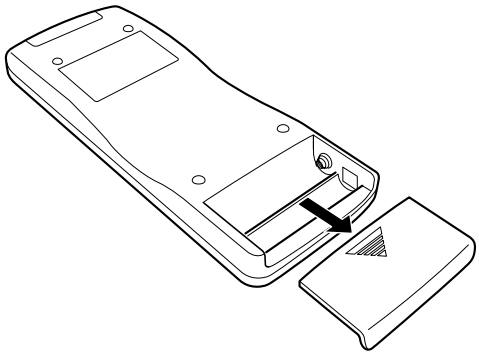

2 Install the batteries.

Place the two supplied batteries (AA/R6-size) in the remote control as illustrated below.

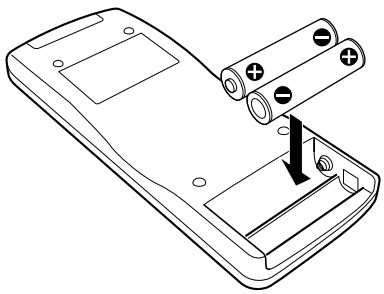

3 Close the back cover.

First fit the claws on the back cover in the case, then close the back cover in the direction of the arrow.

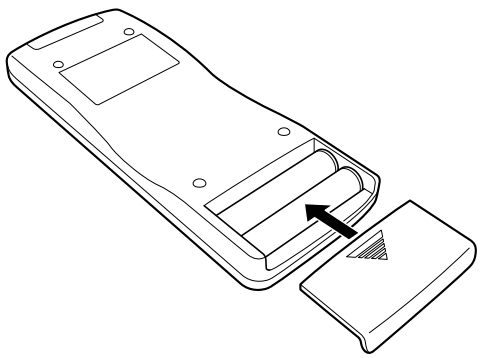

Precautions for using batteries

If batteries are used incorrectly, they may crack or leak liquid. This could cause a fire, burn, malfunction, or staining or damaging of the surroundings.

Beware of the following:

- Do not mix new and old batteries.
- Do not mix different types of batteries as they differ in characteristics.
- Place batteries so they match the polarities indicated: (+) to (+) and (–) to (–).
- Be sure to put the minus (–) end in first to avoid short-circulating.
- Use only designated batteries.
- Remove the batteries if the remote is not to be used for a prolonged period.
- When the batteries are exhausted, replace them immediately. Otherwise, liquid could leak, or malfunction could occur due to leaking liquid. If the leaked liquid contacts the skin, wipe it off with a cloth, otherwise the skin could become rough.
- Do not put batteries into a fire or try to recharge them.
- Batteries run for six months to one year in normal use. However, the batteries supplied are for confirming operation and may not run that long. When the remote control starts failing to work properly, replace the batteries with new ones.

Installing the Projector

Precautions for Installation

CAUTIONS

1. Before installation, do not connect the projector's power cord.

2. Do not install the projector in the following places:

- Where there is water, humidity or dust.
- Where the projector may be subjected to oil, smoke or cigarette smoke.
- On a soft surface such as a carpet or cushion.
- Where the projector may be subjected to direct sunlight.
- Where temperature is high or humidity is low.
  Allowable operation temperature range: 41°F to 95°F (+5°C to +35°C)
  Allowable relative humidity range: 20% to 80% (no condensation)
  Allowable storage temperature range: 14°F to 140°F (–10°C to +60°C)

■ When installing the projector, observe the following:

- Do not use the projector placed on its side.
  Avoid using the projector placed on its side. This could cause a malfunction.
- Use the projector within the specified angle.
  Do not use the projector inclined ±30° horizontally (left/right). This could cause color variation or shorten the lamp life.
- Do not block the exhaust vents.
  Do not use a cover which encloses the projector air-tight or blocks the exhaust vents. Allow sufficient space around the projector. When the projector is enclosed in a space of the following dimensions, use an air conditioner so the temperature inside becomes equal to the outside temperature.

Allowable minimum space required

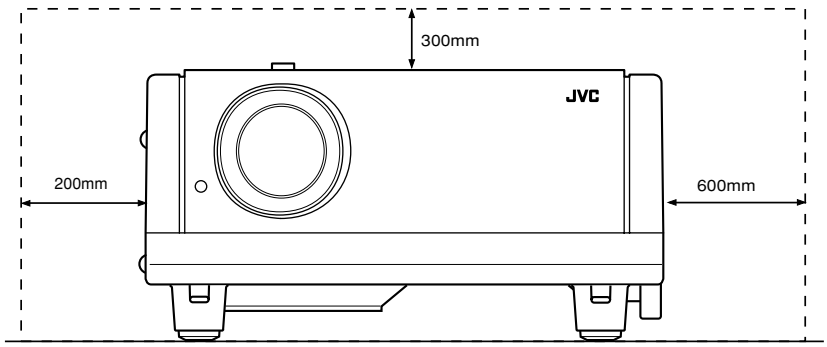

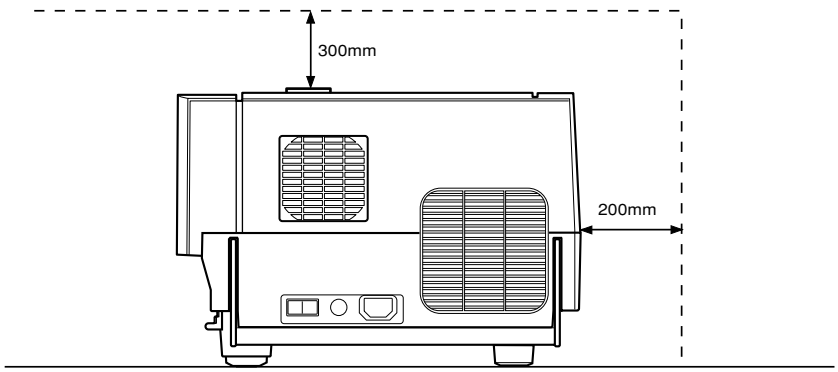

ENGLISH

Adjusting the Inclination of the Projector

The vertical angle and the leveling of the projector can be adjusted with the adjustable feet at the bottom of the projector.

■ Adjusting the vertical angle of the projector

While pushing the levers on both sides upward, raise the projector. The adjustable feet automatically extend.
To retract the feet, push the levers and lower the projector slowly; the projector is fixed at the position where you release the levers.

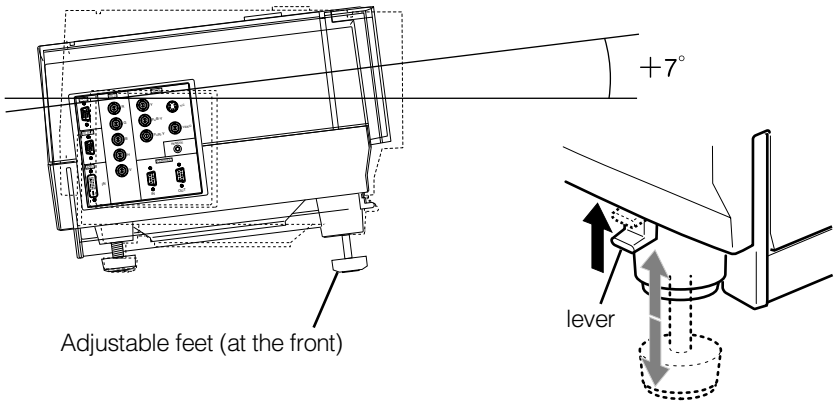

■ Leveling the projector

Lift the projector, rotate the rear adjustable foot, and adjust the horizontal angle until the projector is level.

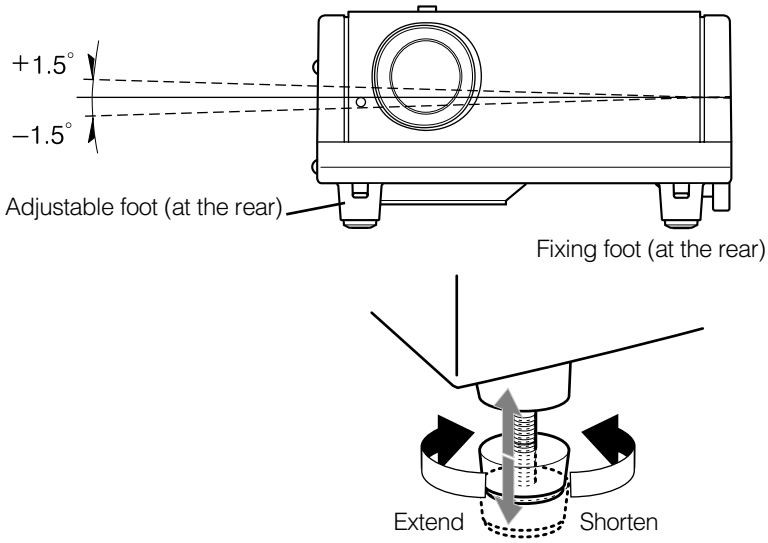

Installing the Projector against the Screen

The projector should be placed so that the center line of the lens is at a right angle to the screen as shown in the following figures.

■ Side view

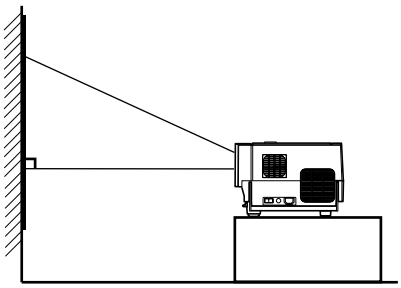

■ Top view

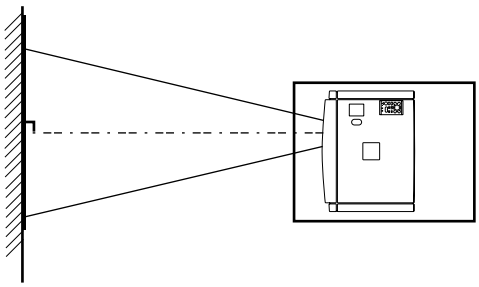

■ Trapezoidal-distortion correctable maximum angle

The projector has a function to correct the trapezoidal distortion of the projected image on the screen.
To correct this distortion, use the KEYSTONE buttons on the projector. (Refer to “Removing the Trapezoidal Distortion of the Image” on page 35.) Also, correction is possible by using the “Keystone” menu. (Refer to “Setting and Adjusting Other Functions (OPTIONS)” on page 54.)

Correctable angle:

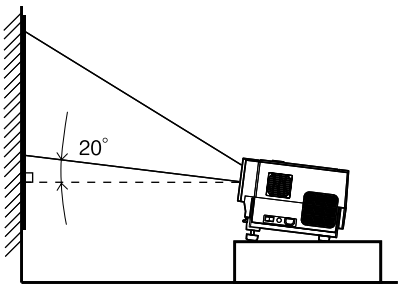

Up to approx. 20° upward from the horizontal line

Correctable angle:

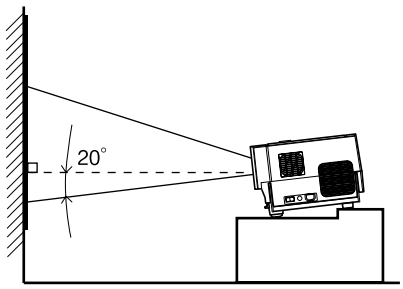

Up to approx. 20° downward from the horizontal line

ENGLISH

Projection Distance and Screen Size

• The range of projection distances that can be focused depends on the lens unit (optional) to be used. When the aspect ratio of the screen is 4:3, the range is as follows and you need to install the projector within this range.

Lens type	Approximate projection distance
GL-M2910G	0.77 m to 4.03 m
GL-M2915SG	1.76 m to 4.50 m
GL-M2920ZG	2.77 m to 19.71 m
GL-M2930SZG	4.74 m to 29.87 m

*: The value for projection distance is a guide (reference) one. The projected image size may vary depending on the manufacturing tolerance of the projection lens.

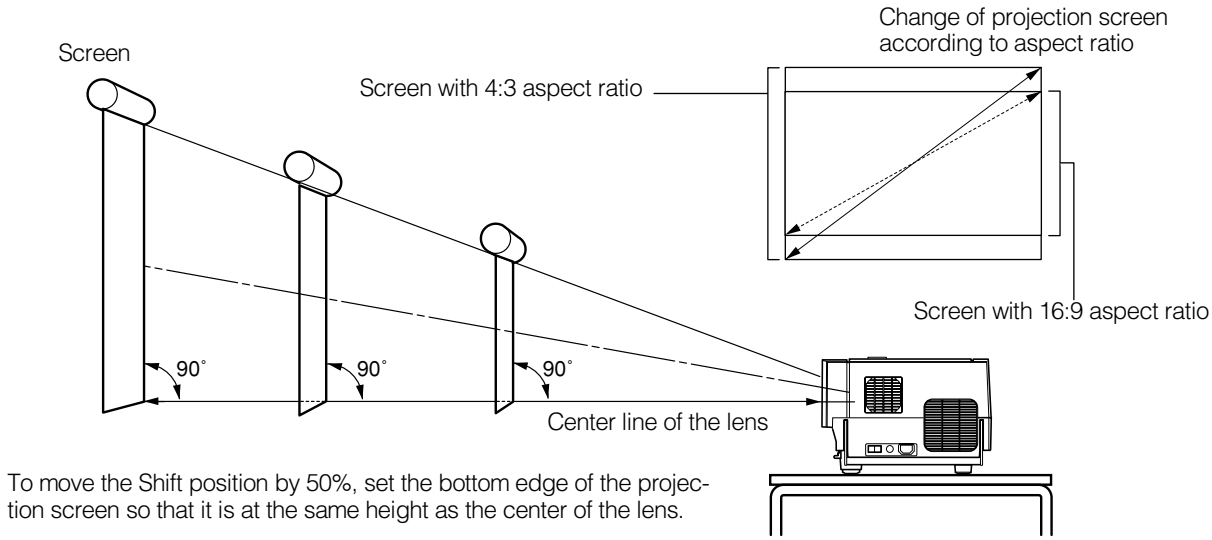

Notes

• For detailed relationship between projection distances and projection screen sizes, refer to Appendix A. The relationships for both 4:3 and 16:9 ratios are listed there.
• When installing a screen, use a 4:3 aspect-ratio picture.
• (A 16 : 9 aspect-ratio picture is projected based on the width of the range in which a 4:3 aspect-ratio picture is projected.)
• The diagonal length of a 16:9 aspect-ratio screen is about 91.8% that of a 4:3 aspect-ratio screen. This value is only a guide (reference).
• If sunlight or lamp light strikes the projection screen directly, the picture tends to become pale and dim. Use a curtain or other means to shield the light.
• Set the projector horizontally on a surface that is within the range of adjustable angles (up/down adjustment angle: +7° ; horizontal adjustment angle: ±1.5°).
• If the keystone is adjusted, the projected screen becomes smaller.
• When hanging from the ceiling, use a dedicated hanging fixture (not supplied).

■ Optional Lenses

This projector does not include a lens. You can select one of the optional lenses to adjust the projection distance. Please ask your authorized dealer or service center to install the lens.

Lens model	Function
GL-M2910G	Powered focus for rear projection, short focal length (subject ratio 1:1), 0% influence.
GL-M2915SG	Powered focus, short focal length (subject ratio 1.5:1), powered image adjustment (2% zoom), includes manual vertical shift function, 30%-55% influence
GL-M2920ZG	Powered zoom/powered focus lens (subject ratio 2:1-3:1), 50% influence.
GL-M2930SZG	Powered zoom/powered focus long focal length lens (subject ratio 2.9:1-5.5:1), includes manual vertical shift function, 30%-55% influence.

Setting the Amount of Lens Shifting

When the lens unit (optional) with the lens shifting function is used, the projected screen can be shifted up and down in position.

Notes

- The amount of shifting is within the range of approx. 30% to 55%.
- After finishing the lens shift setting, tighten the SHIFT LOCK fixing bolt firmly so that the lens will not move.

1 Turn the cap on the top of the projector to open it.

2 Loosen the SHIFT LOCK fixing bolt.

Use the hex. wrench supplied.

3 Rotate the LENS SHIFT knob to adjust the position (shift amount) of the projected screen.

Rotate it to the right: The lens shifts upward.
Rotate it to the left: The lens shifts downward.

4 Tighten the SHIFT LOCK fixing bolt firmly.

Use the hex. wrench supplied.

5 Turn the cap to close it.

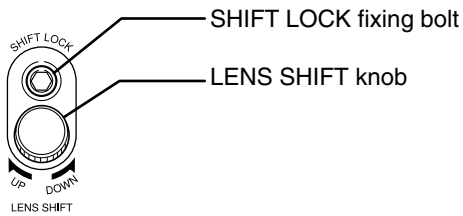

■ Projected screen position image by amount of shift

* The projected screen position can only shift in an up-and-down direction.
The illustration shows the screen shifted sidewise for the purpose of explanation.

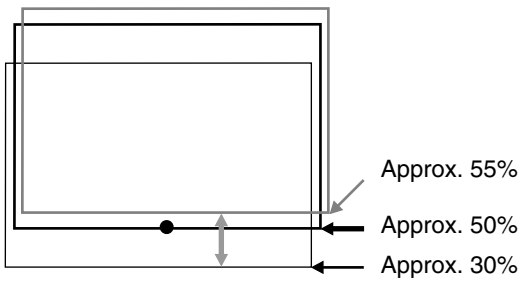

ENGLISH

Effective Range and Distance of the Remote Control Unit

The remote control unit can be used as either a wireless remote control unit or a wired one.

■ Using as a wireless remote control unit

Aim the remote control unit toward the remote sensor on the front or the rear of the projector.
The operable distance of the remote control unit is about 10 m for direct reception. The remote control unit can be used by having it reflected on the screen. In this case, the total distance of "A+B" should be about 10 m or less. The operable angles of the remote control unit are 15° right and left, and 15° up and down.

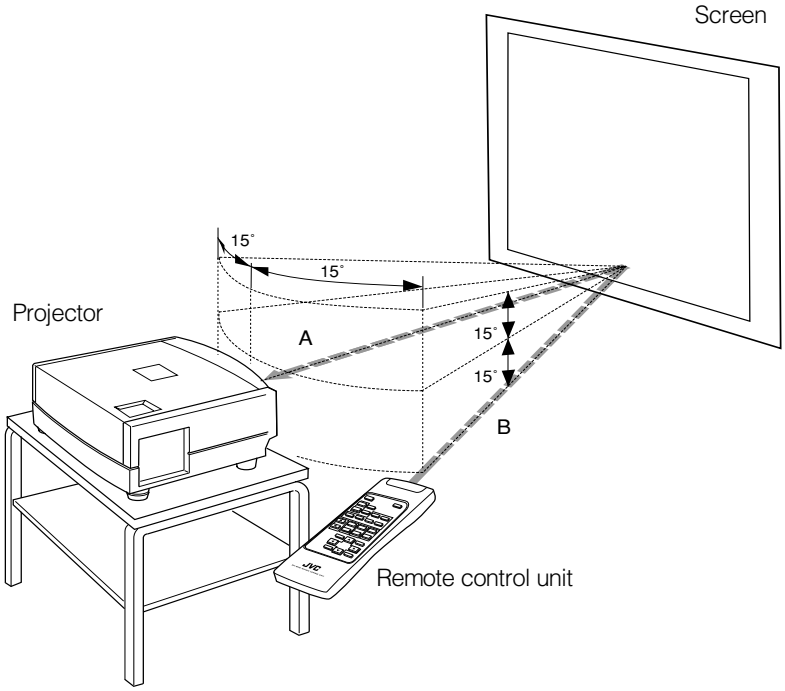

Setting the Position Selecting Screw for Ceiling Mounting

When using the projector in an upside-down, ceiling-mounted position (inverted top-to-bottom and right-to-left), the “position selecting screw for ceiling mounting” must be turned to switch to ceiling mounting.
This will correct variance in color images (shading), which otherwise would occur in ceiling mounting.
To revert to normal desktop setting, turn the “position selecting screw for ceiling mounting” back to the initial position (factory-shipped).

When using the projector in an upside-down, ceiling-mounted position:
Turn the “position selecting screw for ceiling mounting” fully counterclockwise (until it is turning idly).

To again use the projector in a normal desktop setting:
Turn the “position selecting screw for ceiling mounting” fully clockwise (until it firmly tightens).

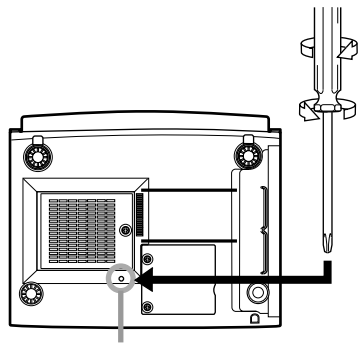

For normal desktop mounting:
Turn the screw clockwise.
For upside-down, ceiling-mounting:
Turn the screw counterclockwise.

CAUTIONS

- To ceiling-mount and adjust the projector, special expertise and technique are necessary. Be sure to ask your dealer or a specialist to perform this work.
- To turn the “position selecting screw for ceiling mounting”, use a Phillips screwdriver with a 30-mm or longer shank.
  The screw is located in the hole shown in the illustration.

Note

- When using the projector in a ceiling-mounted position, you should reverse the projected image by changing the settings of Right Left rev. and Top Bottom inv. menus. For details, refer to page 54. You can also change these settings without receiving a video signal. In this case, refer to “Menu Transition Diagram in No signal Menu Mode” on page 38.

When installing (adjusting/setting) the unit

- **When using “Top Bottom inv.” on the “Options” menu, reset the unit by following the procedure below.**
- **This reset procedure must be performed before operating the unit.**
  1. Change the “Top Bottom inv.” Setting on the “Options” menu.
  2. Press the OPERATE button to enter the unit into the stand-by mode.
  3. Press the OPERATE button again to turn on the unit.
- **Adjust the focus after projecting a picture for 30 minutes or longer.**

ENGLISH

Connecting to Various Devices

Before connection, be sure to turn off the projector and connected devices.
Read the manual which comes with each device thoroughly.

Signals that Can Be Input to the Projector

The following signals can be input to the projector:

■ Video signals

(1) Response to color systems

Color systems / Input terminal	NTSC	NTSC4.43	PAL	SECAM
VIDEO	○	○	○	○
Y/C	○	○*1	○	- - - - -
Y, P_B/B-Y, P_R/R-Y	○*2	○*2	○*2	○*2
G, B, R, H/C_S, V	○*2	○*2	○*2	○*2

**1:Responds if Y/C output is available.*
**2:Signifies that component signals ("Y, P_B, P_R" / "Y, B-Y, R-Y" / "G, B, R, H/C_S, V") conform to the signal timing (synchronization and video period) of each color system. The color systems are used for convenience only.*

(2) Response to double density (*3), high-vision signals

Input terminal	NTSC*4	NTSC*5	High-vision signal
Y, P_B/B-Y, P_R/R-Y	○	○	○
G, B, R, H/C_S, V	○	○	○

**3:Signals whose density of scanning lines/field is twice as high.*
**4:Responds to signals whose horizontal scanning frequency is 31.5 kHz. NTSC can be made twice as dense by a line doubler (separately available: recommended article). Also, possible to respond to fully-specified, decoded wide-clear-vision signal and decoded 525P progressive signal.*
**5:Responds to signals whose horizontal scanning frequency is 33.5 kHz. PAL can be made twice as dense by a line doubler (separately available: recommended article).*

(3) Response to DTV-format signals

DTV-format signals (480i, 480p, 720p, 1080i) can be input to the Y, P_B/B-Y, P_R/R-Y, G, B, R, H/C_S, V input terminal.

■ Computer signals

Signals with the following scanning frequencies can be input to the PC 1 or PC 2 (G, B, R, H/C_S, V) and DVI terminals.

Horizontal scanning frequency	15kHz - 105kHz
Vertical scanning frequency	50Hz - 100Hz

Be sure that the computer to be used suffices the following conditions:

- The computer has the video signal output port.
  Be sure that the computer has the video signal output port by reading the instruction book of the computer.
  The video signal output port is generally called as "RGB port", "monitor port", or "video port". If the computer-monitor hybrid type or note type is used, it may need to prepare for an external output port. Also, there will be the type to which an external output port cannot be installed.
- DVI input
  During DVI input, depending on the computer settings, there may be no signal input or an error may occur (blue screen).
  If this happens, turn off the power to both the projector and the computer, and then turn the projector back on before turning the computer on again. Then correctly set the computer's graphic board.
- The resolution and the scanning frequencies are within the range specified in the table on page 23.
  Be sure that the resolution and the scanning frequencies of the video signal are within the range. A video signal out of range cannot be used. (Even signals out of the range could be projected. However, it may not sharp enough. On the other hand, even some of the signals within the range may require adjustment depending on the video board used.)
  When a signal other than listed in the table on page 23 is input, the image could be partially erased or an unneeded fold-over image could appear.
  Even signals in the frequency range that can be input may not be displayed normally depending on the type of the signal.
  Composite sync (C_S) and G on Sync signals cannot be handled depending on the devices connected.

■ Allowable input signals

Signal			Horizontal resolution Hor [Pixels]	Vertical resolution Ver [Lines]	Horizontal frequency H [kHz]	Vertical frequency V [Hz]
PC system	PC98	VESA350	640	350	37.86	84.13
	PC/AT	PC98	640	400	24.83	56.42
	DOS/V	VGA 60Hz*	640	480	31.47	59.94
	DVI*	VGA 72Hz*	640	480	37.86	72.81
		VGA 75Hz*	640	480	37.50	75.00
		VGA 85Hz*	640	480	43.27	85.01
		SVGA 56Hz*	800	600	35.16	56.25
		SVGA 60Hz*	800	600	37.88	60.32
		SVGA 72Hz*	800	600	48.08	72.19
		SVGA 75Hz*	800	600	46.88	75.00
		SVGA 85Hz*	800	600	53.67	85.06
		XGA 43Hz*	1024	768/2	35.52	43.48
		XGA 60Hz*	1024	768	48.36	60.00
		XGA 70Hz*	1024	768	56.48	70.07
		XGA 75Hz*	1024	768	60.02	75.03
		XGA 85Hz*	1024	768	68.68	85.00
		SXGA 43Hz*	1280	1024/2	46.43	43.44
		SXGA 60Hz*	1280	1024	63.98	60.02
		SXGA 75Hz*	1280	1024	79.98	75.03
		SXGA 85Hz*	1280	1024	91.15	85.02
		UXGA 60Hz	1600	1200	75.00	60.00
	Mac	MAC13	640	480	35.00	66.67
		MAC16	832	624	49.73	74.55
		MAC19	1024	768	60.24	74.93
		MAC21	1152	870	68.68	75.06
Video system	Video	HDTV (1035i) 60Hz			33.75	60.00
		HDTV (1035i) 59Hz			33.72	59.94
		480p	720	483	31.47	59.94
		720p 60Hz	1280	720	45.00	60.00
		720p 59Hz	1280	720	44.96	59.94
		1080i 60Hz	1920	1080/2	33.75	60.00
		1080i 59Hz	1920	1080/2	33.72	59.94
		1080 24sF	1920	1080	27.00	24.00
		NTSC			15.734	60
		PAL			15.625	50
		SECAM			15.625	50

** A signal that can be input by DVI (V-sync 85Hz is not supported.)*

Notes

- The resolution for the input signals is listed in the above table.
- Even signals in the frequency range that can be input may not be displayed normally depending on the type of the signal.
- When a signal other than listed above is input, the image could be partially erased or an unneeded fold-over image could appear.
- Some signals other than listed above can be displayed. But they may require adjustment.
- Even some of the signals listed above may require adjustment depending on the video board used.
- Composite sync (Cs) and G on Sync signals cannot be handled depending on the devices connected.
- The VGA signal of the PC system could be displayed in 480p mode of the VIDEO system. (In this case, the projector enters video menu mode when the MENU button is pressed.)

ENGLISH

Connecting to Video Devices

Before connection, be sure to turn off both the projector and video device.

- Read thoroughly the manual that comes with each video device.
- Use the supplied video cable. An video cable with an S-video (Y/C) terminal is not supplied.

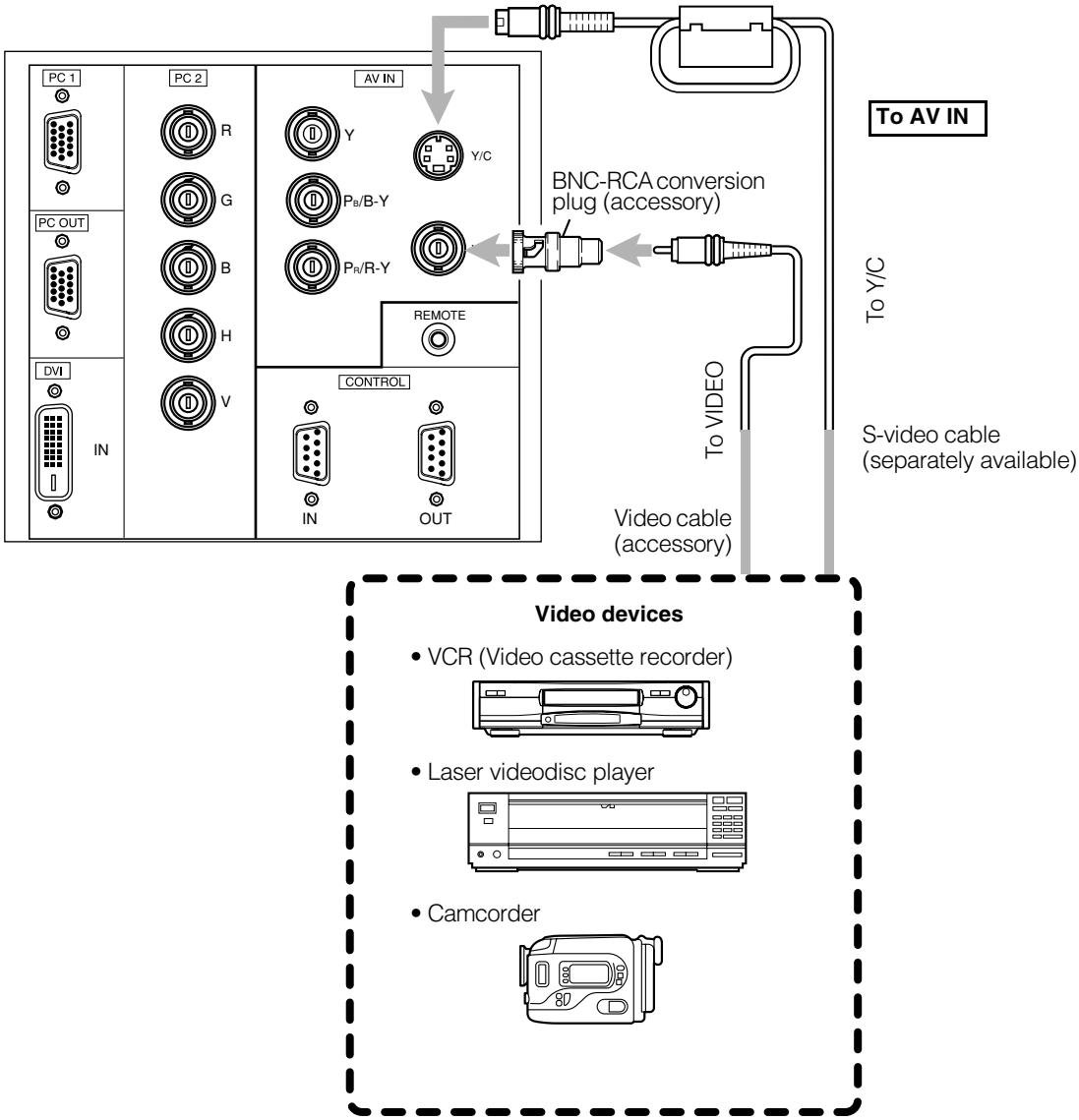

Notes

- Connect a composite image signal output device or Y/C (S-video) image output device.
- When connecting the S-video cable, refer to “How to attach the ferrite core” on page 29.

Memo

- When connecting a video device, use a TBC along with it, or one which has a built-in TBC.
- Use of an extension cable to connect a video device and the projector could cause video degradation.
- When a signal with much jitter is reproduced on a VCR, or special-effect playback is performed, the upper part of the image or the image itself may be erased or distorted.

Connecting to Hi-Vision Devices/DVD Players

Before connecting, be sure to turn off both the projector and Hi-Vision devices/DVD players.

- Thoroughly read the manual that comes with each Hi-Vision device or DVD player.
- Use separately available BNC cables to connect Hi-Vision devices and DVD players.

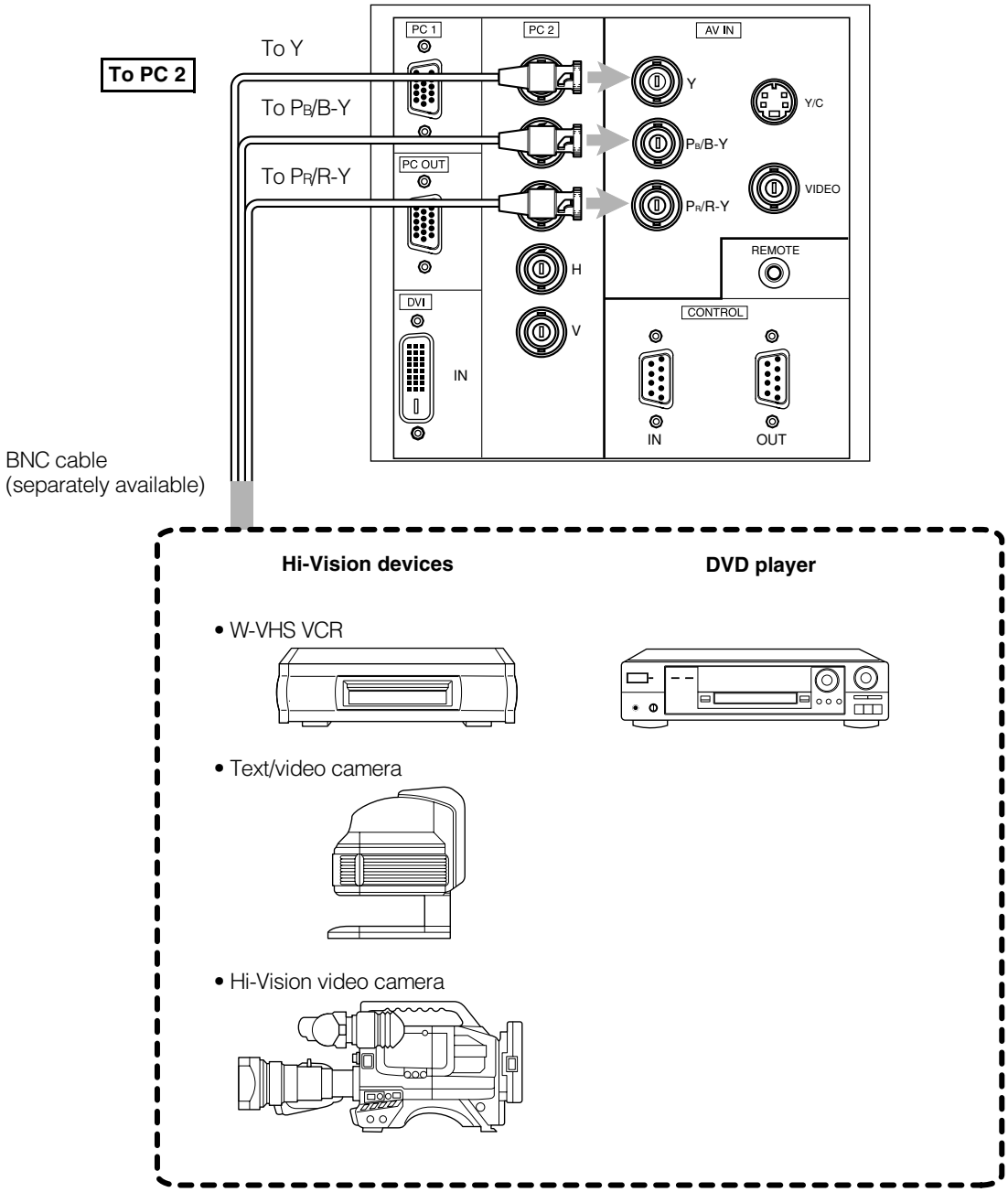

Note

- Connect a component signal output device or DTV-format signal output device.

Memo

- Other devices with component signal output terminals (DVD player (NTSC), etc.) can be connected. (*DVD: Digital Video Disc)
- DTV-format signals (480i, 480p, 720p, 1080i) can be input. For DTV-format signals which can be handled, refer to “Video signals” on page 22.

ENGLISH

Connecting to Other Devices

Before connection, be sure to turn off both the projector and other devices to be connected.

- Read thoroughly the manual that comes with the device to be connected.
- Use the supplied video cable or the cable supplied with the game device.

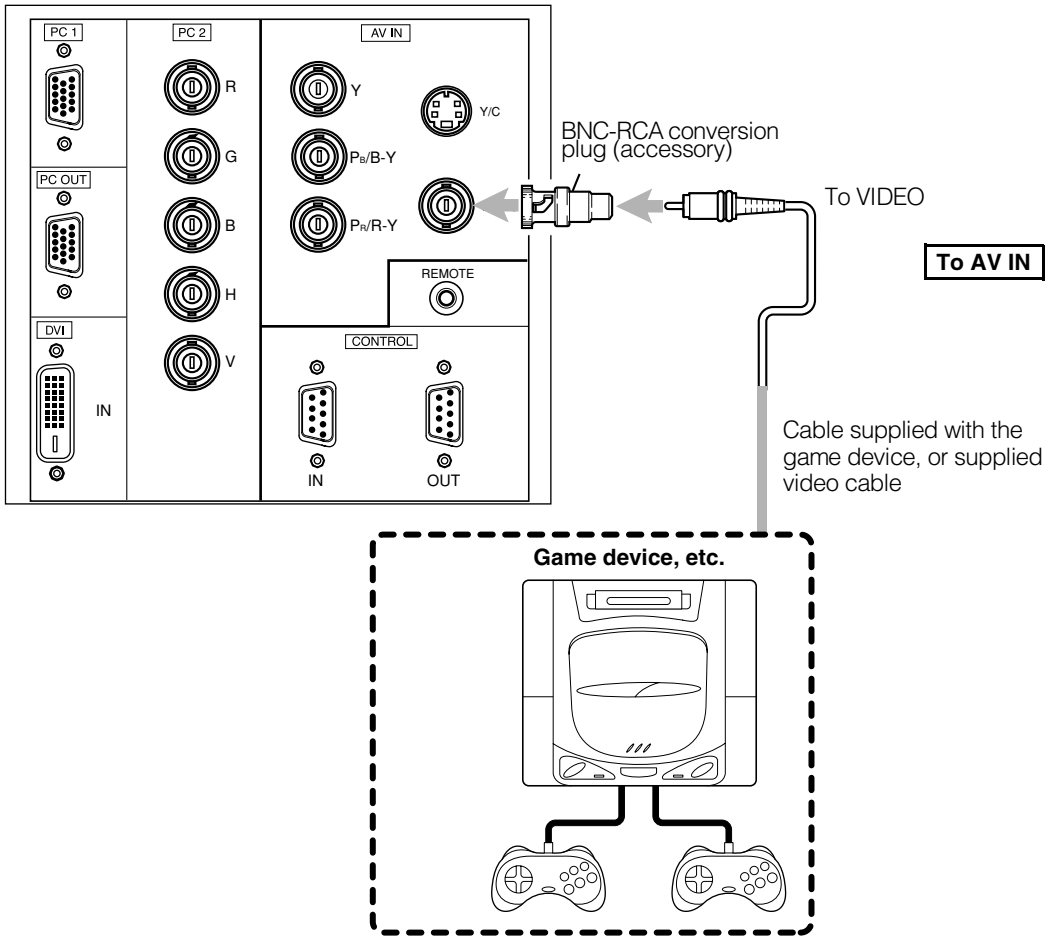

Connecting to Devices which Control the Projector

Before connection, be sure to turn off both the projector and devices to be connected.

- Read thoroughly the manual that comes with each device to be connected.
- By connecting a computer to the RS-232C terminal, you can control the projector. Also, you can make an infrared remote sensor extension unit and connect it to the REMOTE terminal of the projector.

** Obtain connection cables as required. Use a reverse connection cable.*
** For details, refer to "RS-232C external control" on page 74.*
** For further details, consult your dealer or an authorized service center.*

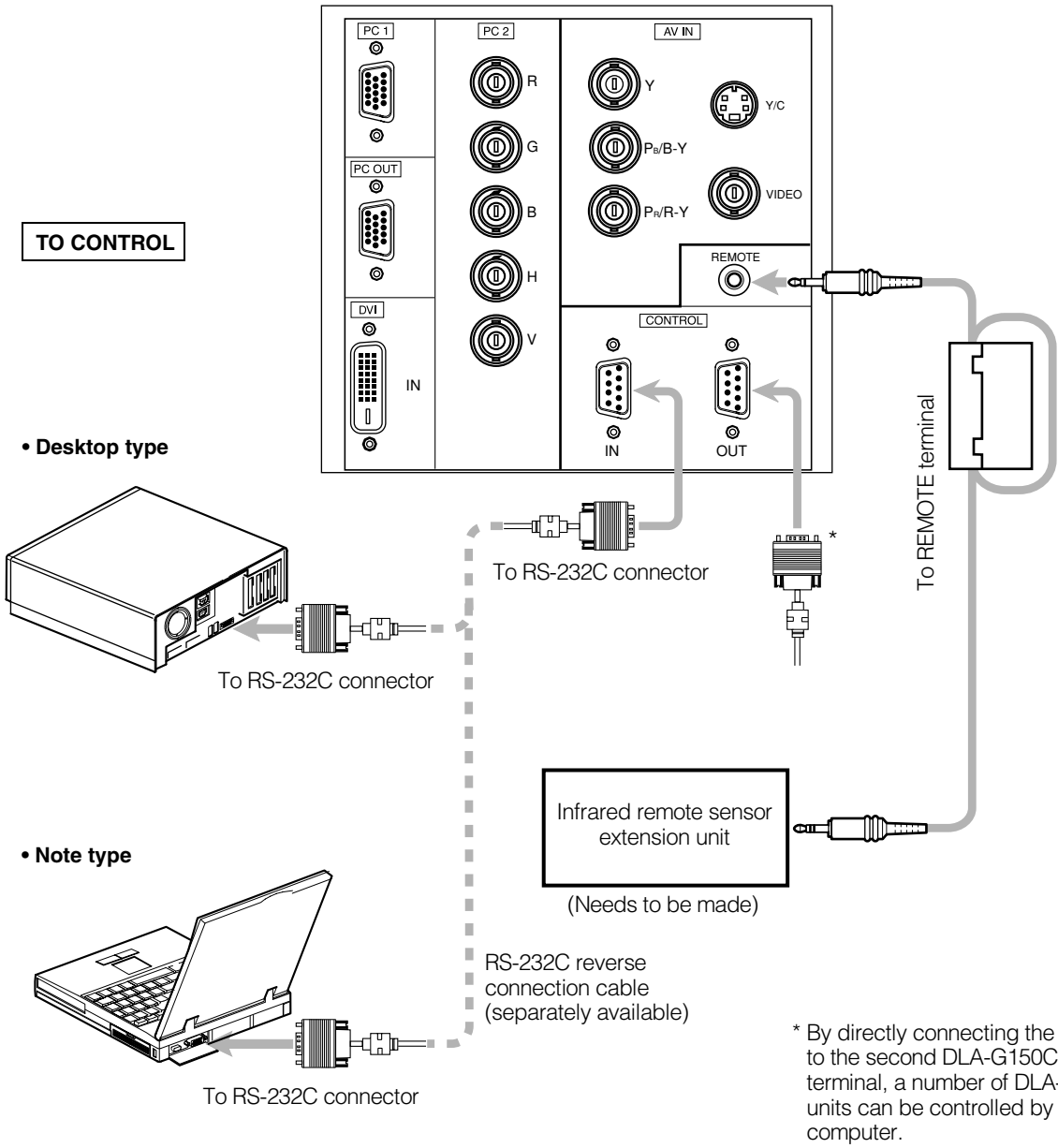

* By directly connecting the OUT terminal to the second DLA-G150CLU IN terminal, a number of DLA-G150CLU units can be controlled by a single computer.

Note

- When connecting the cable to the REMOTE terminal, refer to "How to attach the ferrite core" on page 29.

ENGLISH

Connecting to Computer Devices

Before connection, be sure to turn off both the projector and computer devices.
• Read thoroughly the manual that comes with each device.

■ Connection to an IBM PC or IBM-compatible computer

• Use the supplied personal computer connection cable. Also, prepare cables required for connecting the devices connected.

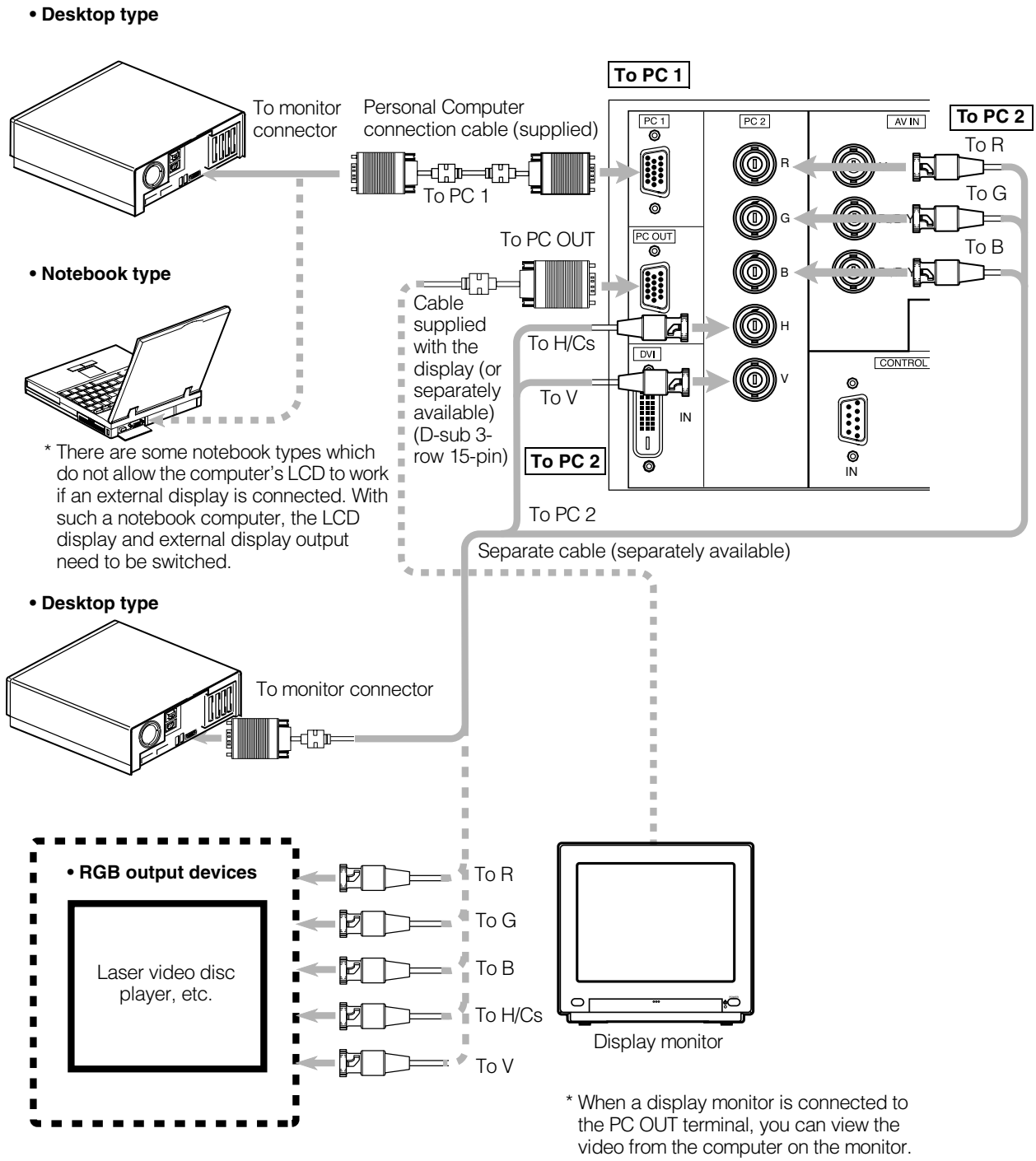

Connecting to DVI

Before connection, be sure to turn off both the projector and computer devices.
• Read thoroughly the manual that comes with each device.

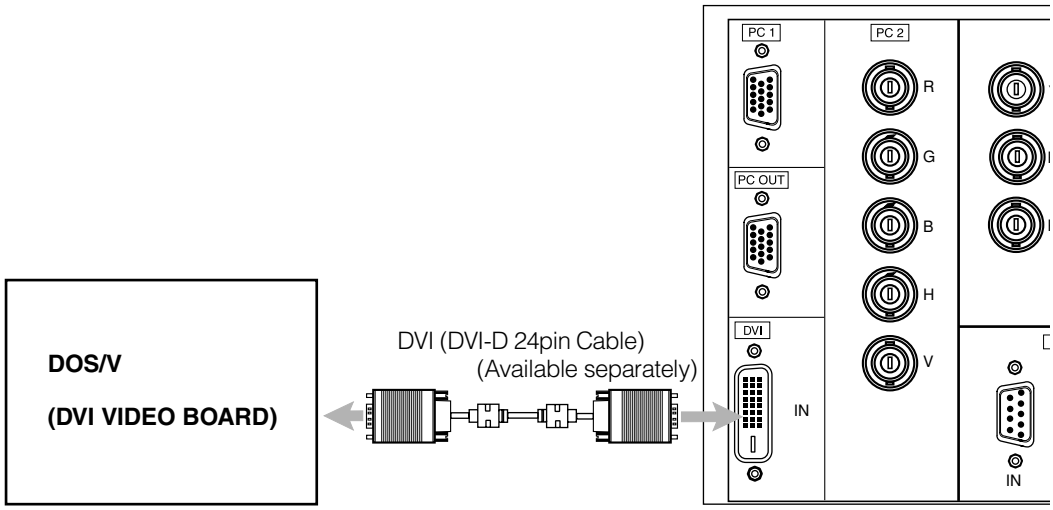

Note

• Other connections are the same as in the connection example for IBM PC or IBM compatible PCs.

How to attach the ferrite core

Attach the ferrite core when using the S-video cable or infrared remote sensor extension unit which are sold separately. However, use a cable that can be wound once.

1 Release the stopper at each end and open the ferrite core.

2 Wind the cord around the ferrite core.

Attach the ferrite core about 3 cm from the end of the cord.

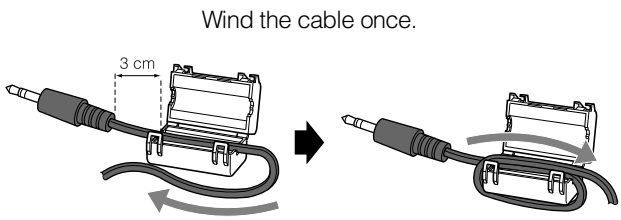

3 Close the ferrite core with the cord inside until you hear it click shut.

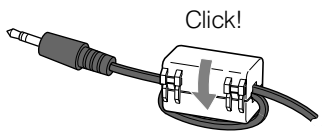

Note

• When connecting, connect the terminal which is at the ferrite core end of the cord to the projector.

ENGLISH

Connecting the Power Cord

After all devices have been finished being connected, connect the supplied power cord. At this time, **do not yet turn on the MAIN POWER switch**.

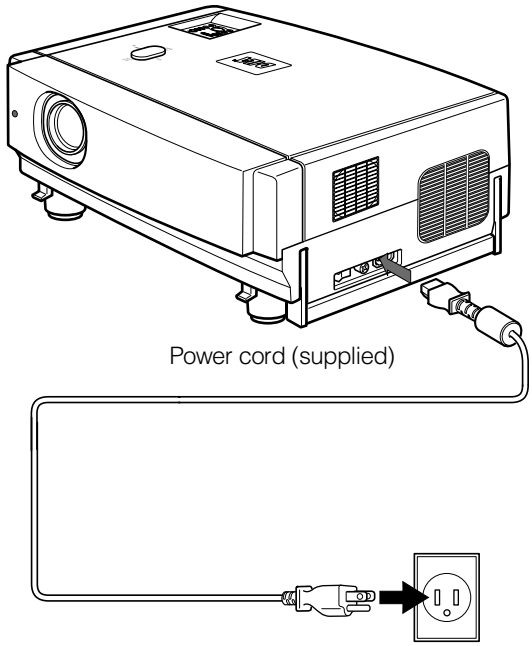

1 Insert the supplied power cord into the power input terminal of the projector.

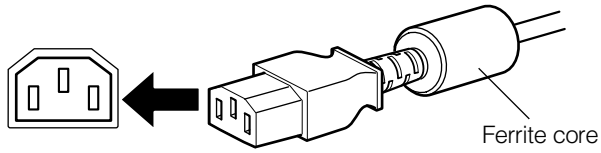

2 Insert the main plug of the supplied power cord into a suitable wall outlet.

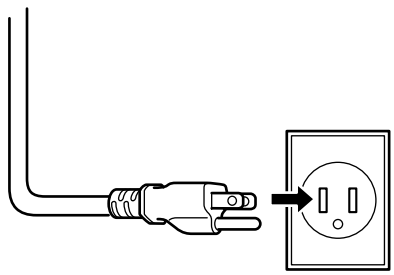

CAUTIONS

To prevent fire and electric shock, observe the following:

- When you do not use devices, pull out their power cords from wall outlets.
- Do not connect the devices with power cords other than those supplied.
- Do not use mains voltage other than the power voltage indicated.
- Do not scar, damage, or work on the power cords. Also, do not put a heavy object on, heat, or stretch the power cords, otherwise they may be damaged.
- Do not insert or pull out the plugs with a wet hand.

CAUTIONS

- Since the power requirement of the projector is high, insert

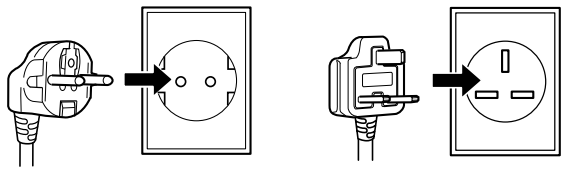

for European continent countries

for United Kingdom

the power plug directly into a wall outlet.
- Use the supplied power cord with the ferrite core only.
- Do not remove the ferrite core from the supplied power cord; Otherwise, there may be a possibility that a harmful interference occurs.

Removing the Lens Cap

Remove the lens cap before using the projector.

Notes

- The lens cap is supplied with the lens unit (optional). It should be attached to the lens when the projector is not used.
- Do not operate the projector with the lens cap attached. Doing so can deform the lens cap because of the heat. A metallic lens cap can get hot and cause injury.

■ Lamp control settings

After turning the power on, first perform the lamp control settings on the setting menu referring to “Setting and Adjusting Other Functions (OPTIONS)” on page 54.

There are 3 modes in the lamp control settings.

1: NORMAL MODE (Normal)
Used as a normal lamp.
The projector is set to “Normal” mode at the time of purchase.
** “Lamp replacement” appears on the screen when the lamp use time exceeds 1000 hours.*

2: LIGHT POWER CONTROL MODE (LPC)
Automatically controls the power used by the lamp and increases it in steps. When this mode is used, the brightness starts at approximately 70%. The decrease in brightness is slower than in “Normal” mode and this mode is best suited when using the projector continuously for long periods of time.
** “Lamp replacement” appears on the screen when the lamp use time exceeds 2000 hours.*

3: LIGHT OUTPUT CONTROL MODE (LOC)
The brightness can be set in seven levels (-6 to 0). Since the brightness can be set in steps, this is the mode best suited for adjusting multiple screens. This setting can also be changed while the projector is being used. To change the setting, choose LOC with the ▲/▼ cursors and choose the level with the ◄/► cursors.
** “Lamp replacement” appears on the screen when the lamp use time exceeds 2000 hours.*

The lamp replacement time is different for the 3 modes.

1: NORMAL MODE (Normal) ... 1000 hours
2: LIGHT POWER CONTROL MODE (LPC) ... 2000 hours
3: LIGHT OUTPUT CONTROL MODE (LOC) ... 2000 hours
** These lamp replacement times are only a rough guide as to how long the lamp will last if these modes are used from the beginning. These are not guaranteed service lives.*

Notes

- Although the LIGHT OUTPUT CONTROL MODE (LOC) and LIGHT POWER CONTROL MODE (LPC) electrically control the brightness of the lamp and extend the replacement time longer than that for the NORMAL MODE, the service life of the lamp is approximately 1000 hours.
- The lamp will gradually become less bright in each mode.
  Since the lamp may become less bright quickly in some usage environments, replace the lamp if you notice that it is no longer bright even if the lamp has not yet reached the end of its life.
- Mode settings

** If the projector is not put in stand-by mode or turned off after the lamp has been used continuously in the normal mode for more than 1000 hours (but less than 2010 hours), it can be used for “up to 2010 hours”.*
However, if the projector is put in stand-by mode or turned off, it can not be turned back on again.
** If the projector is put in stand-by mode or turned off after the lamp has been used in the light output control mode or light power control mode for more than 2000 hours (but less than 2010 hours), it can not be turned back on again.*
However, if the projector is not put in stand-by mode or turned off, it can be used for “up to 2010 hours”.
** If the projector is used in the light output control mode or light power control mode for more than 1000 hours, and then switched to the normal mode, put in stand-by mode or turned off, it can not be turned back on again.*

After performing the above settings, perform the necessary settings.

ENGLISH

■ Projector's buttons

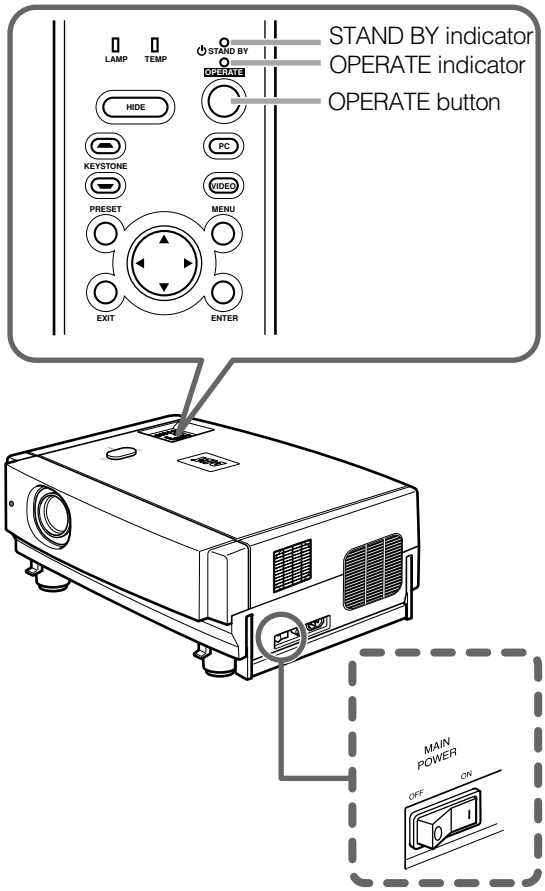

■ Remote control unit

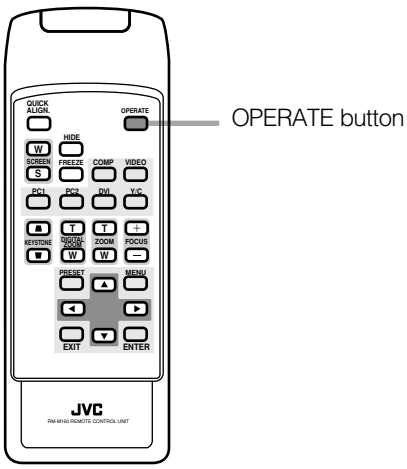

The following describes the basic procedure for normal use of the projector.

1. Turning on the Power

1 Turn on the MAIN POWER switch.

ON [❙]:The main power turns on and the STAND BY indicator comes on.

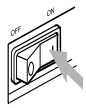

Projector's indicator

2 Press the OPERATE button for one second or more.

- The OPERATE indicator lights and the projected screen slowly appears.

Remote control unit

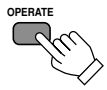

or

Projector

Notes

- After the power is turned on, the image may be jumbled for a few seconds, but this is not a malfunction.
- After the indicator comes on, it can take a minute or so for the lamp to warm up and operate consistently.

■ Turning off the Power

1 Press the OPERATE button for one second or more.

- The STAND BY indicator changes to blinking, and the projector goes into cool-down mode. The cool-down mode will continue for approximately 120 seconds.

Remote control unit

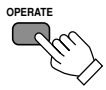

Projector (Blinking)

Note

- The OPERATE button will not work for approximately 1 minute from when the light-source lamp is turned on. Use the button after approximately 1 minute.

2 Turn off the MAIN POWER switch after the STAND BY indicator changes to steady on.

OFF [O]:The MAIN POWER switch turns off and the STAND BY indicator goes off.

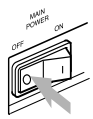

Projector

CAUTION

- Do not turn off the MAIN POWER switch during cool-down mode (the STAND BY indicator blinking). Turn it off after the STAND BY indicator becomes on (stand-by mode).

■ Projector's buttons

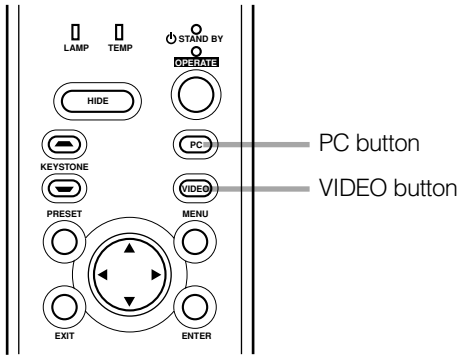

■ Remote control unit

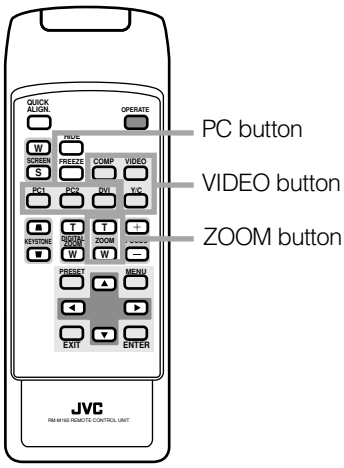

■ Language display

The display languages of the menus, direct buttons (DIGITAL ZOOM, KEYSTONE, etc) and messages is set to "ENGLISH" when the projector is bought. The display language can be selected from the following 6 languages: "日本語 (Japanese)", "English (English)", "Deutsch (German)", "Español (Spanish)", "Italiano (Italian)" and "Français (French)". (Refer to page 46.) However, some words (VIDEO, NTSC, Quick Alignment, etc) are only displayed in English.

2. Select the Input source to be Projected

Press the VIDEO button or the PC button to switch the input.

- Each time you press either button, the selected input changes as follows. The selected name appears on the top right of the image on the screen for five seconds. (Called line display.)

When selecting an image device connected to the AV IN (VIDEO, Y/C or COMP) terminal:

Projector

Press VIDEO.

The input mode changes as follows every time the button is pressed.

VIDEO ↔ Y/C ↔ COMP

Remote control unit

Press the "VIDEO", "Y/C" or "COMP" button.

VIDEO: The image from the VIDEO input terminal on the side of the unit is projected.

Y/C: The image from the Y/C input terminal on the side of the unit is projected.

COMP: The image from the COMP (Y, R_B/B-Y, P_R/R-Y) input terminal on the side of the unit is projected.

** When there is no signal from the selected input terminal (No signal), "No Input" is displayed.*

When selecting a device such as a computer which is connected to the PC1, PC2 or DVI terminal:

Projector

Press PC.

The input mode changes as follows every time the button is pressed.

PC1 ↔ PC2 ↔ DVI

Remote control unit

Press the "PC1", "PC2" or "DVI" button.

PC1: The image from the PC1 input terminal on the side of the unit is projected.

PC2: The image from the PC2 input terminal on the side of the unit is projected.

DVI: The image from the DVI input terminal on the side of the unit is projected.

** When there is no signal from the selected input terminal (No signal), "No Input" is displayed.*

Remote control unit **Projector**

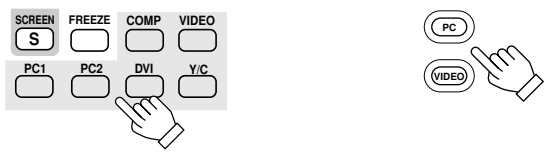

[Screen display]

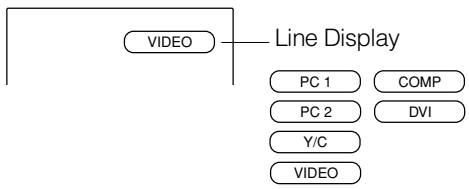

** To show the line display (Y/C, VIDEO, COMP, PC1, PC2 or DVI) or not is selectable by the menu. Refer to "Setting and Adjusting Other Functions (OPTIONS)" on page 54.*

Note

- When no image signal is input to the selected input terminal, the message "No Input" is displayed on the screen. (Refer to page 67.)

ENGLISH

■ Projector's buttons

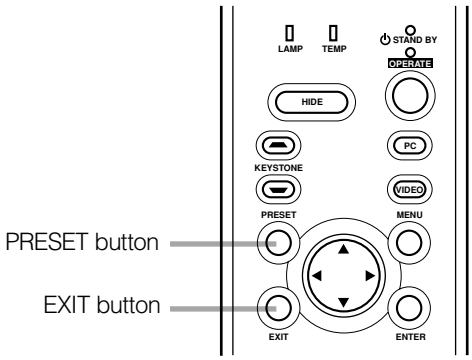

■ Remote control unit

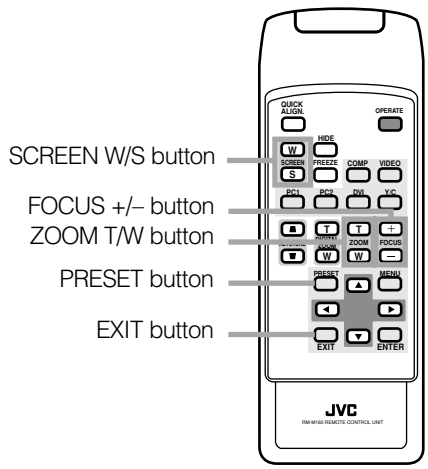

3. Adjust the Screen Size (Zooming)

How to adjust the projected screen size differs depending on the lens unit (optional) you are using.

GL-M2910G (without zooming function):
The projected screen size cannot be changed.

GL-M2915SG/GL-M2920ZG/GL-M2930SZG (with zooming function):
Adjust the projected screen size with the following buttons on the remote control unit.

Note

- The function of GL-M2915SG is to adjust the view angle zooming by 2%. (For fine view angle adjustment)

To enlarge the projected screen size
Press the ZOOM W (Wide) button.

To reduce the screen size
Press the ZOOM T (Tele) button.

Remote control unit

4. Adjust Focus

Adjust focus with the following buttons on the remote control unit.

To focus on farther points:
Press the FOCUS + button.

To focus on nearer points:
Press the FOCUS – button.

Remote control unit

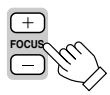

5. Setting the Screen Aspect Ratio

Set in accordance with the screen aspect ratio that will be used. When a screen aspect ratio of 16:9 is used, a 4:3 image can be projected within the screen without using the zoom function.

When using a 16:9 screen:
Press the "W" button.

When using a 4:3 screen:
Press the "S" button.

Remote control unit

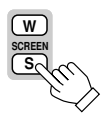

** There is no button on the unit.*
** This setting can also be performed from the menu. (Refer to page 46.)*

• When using a screen with a 16:9 aspect ratio

When set to "S" (4:3)
** If a 4:3 image is projected, some parts of the top and bottom of the image may not be displayed.*

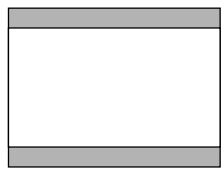

When set to "W" (16:9)
** A 4:3 image will be displayed in full in the middle of the screen.*

■ Projector's buttons

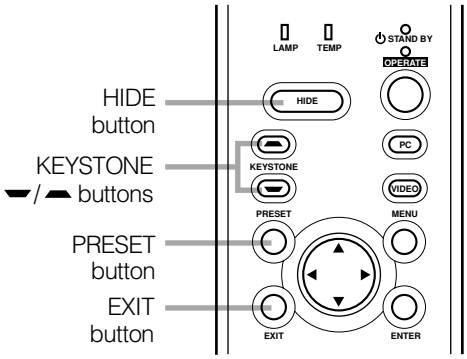

■ Remote control unit

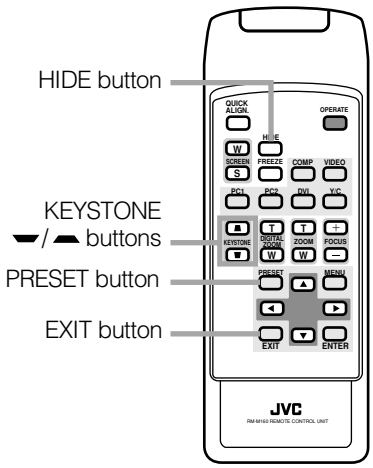

Turning off Image (HIDE)

Video image can be temporarily turned off.

Press the HIDE button once:
Video image instantly turn off.

Press the HIDE button again:
Video image come on again.

Remote control unit **Projector**

Note

- When the projected image input is changed, the HIDE function is canceled and the image return.

Removing the Trapezoidal Distortion of the Image

If the image projected on the screen is distorted in trapezoid form, correct it with the KEYSTONE buttons on the projector. When the KEYSTONE button is pressed, "Keystone" appears on the screen together with the level bar and set value (–80 to 128). When "15 sec." is displayed in the menu, "Keystone" will appear in approximately 15 seconds.

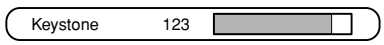

When you press the KEYSTONE ▬ button:
The trapezoid form is corrected as shown in the figure.

When you press the KEYSTONE ▬ button:
The top bottom inverted trapezoid form is corrected as shown in the figure.

** To cancel correction and restore the original screen, press the PRESET button.* (Adjusted value:0)
** Press the EXIT button to immediately remove the keystone display.*

Remote control unit **Projector**

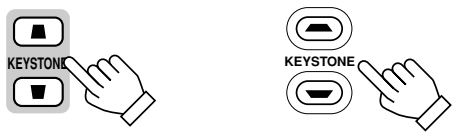

Projected image with trapezoidal distortion

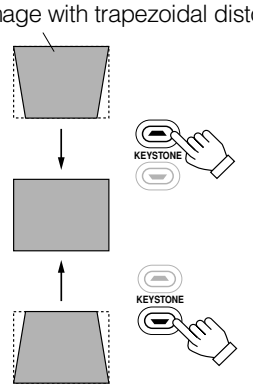

Notes

- The trapezoidal distortion (keystone) can be adjusted from the option menu. (Refer to page 54.)
- The range of the trapezoidal distortion adjustment is approximately 20° in the vertical direction.
- Interference patterns may appear on the screen when adjusting the keystone. This is not a malfunction.
- Depending on the type of signal, some noise may appear in the picture when the keystone is adjusted.
  This is not a malfunction.

ENGLISH

■ Remote control unit

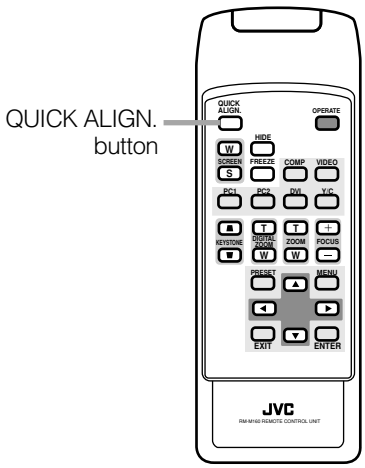

Quick Alignment Function (QUICK ALIGN.)

The Quick Alignment function automatically adjusts (sets) the screen settings of the image input from the PC1, PC2 or DVI input terminals. This can only be performed from the remote control.

While projecting an image on the screen, press the QUICK ALIGN. button on the remote control.
Quick alignment is conducted to obtain best image.
** During the automatic alignment, "Quick Alignment" appears on the screen, and then disappears when the alignment is completed.*

Remote control unit

[Screen display]

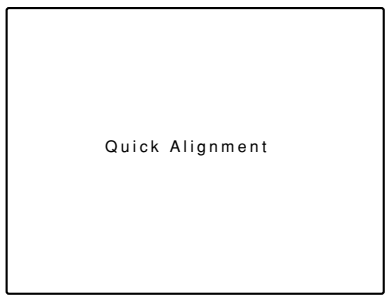

Notes

- This only works for the signals input from the PC1, PC2 or DVI input terminals. It does not work for the signals input from the AV IN terminal (VIDEO, Y/C or COMP input terminal).
- The quick alignment function is used to automatically adjust the "Horizontal and vertical position", "Phase" and "Tracking" of the projected image.
- When using the quick alignment function to automatically adjust the image, use a bright, still-picture. It may not function correctly on a dark or motion picture. If the results obtained with the quick alignment function are not satisfactory, manually adjust the "Horizontal and vertical position", "Phase" and "Tracking" of the projected image.

■ Remote control unit

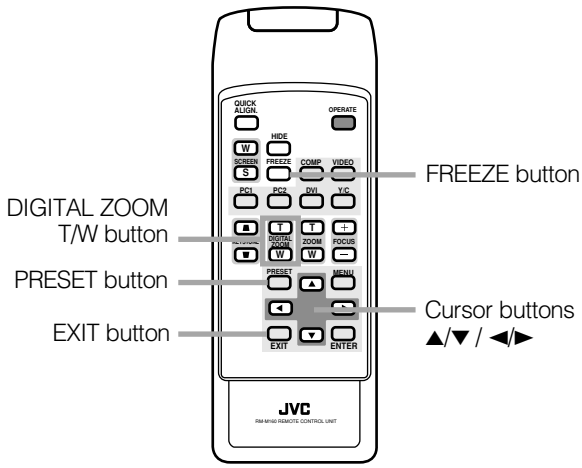

FREEZE message

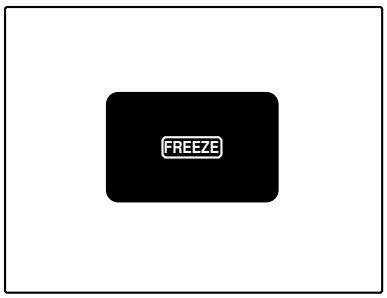

FREEZE inhibit message

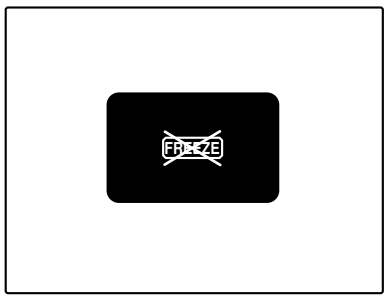

DIGITAL ZOOM inhibit message

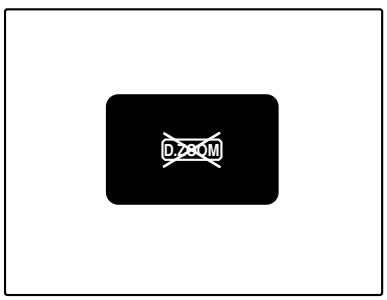

Displaying a Still Picture (FREEZE)

While projecting an image, a still picture is obtained at any time by using the FREEZE button on the remote control.

When you press the FREEZE button:

"FREEZE" appears on the screen for a few seconds and then the still picture is shown on the screen. Refer to the FREEZE message shown on the left of this page.

** To forcibly clear "FREEZE", press the EXIT button.*

When you press the FREEZE button again.

The original image resumes.

Remote control unit

Notes

- During freezing, the picture sent from the signal source is lost.
- If any of the inoperative buttons ("MENU", "QUICK ALIGN.", "KEYSTONE") are pressed while displaying a still picture, "FREEZE" is displayed on the screen.
- This function will not work with some signal sources (UXGA, etc). In this case, the FREEZE inhibit message appears for a few seconds, as shown on the left. To forcibly clear this message, press the EXIT button.

Zooming a Part of the Image (DIGITAL ZOOM T/W)

A part of the image being projected can be digitally magnified up to four times. When the DIGITAL ZOOM T or W button is pressed, "Digital zoom" appears on the screen together with the level bar and magnifying power (×1.0, ×1.2, ×1.4, ×1.6, ×2.0, ×2.5, ×3.2, ×4.0). When "15 sec." is displayed in the menu, "Digital zoom" will appear in approximately 15 seconds.

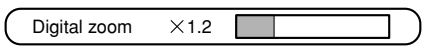

- To zoom up or zoom down, press the DIGITAL ZOOM T or W button on the remote control.

Remote control unit

Moving the zoomed image:

While "Digital zoom" appears on the screen, you can move the zoomed image with the cursor (▲/▼/◄/►) button on the remote control.

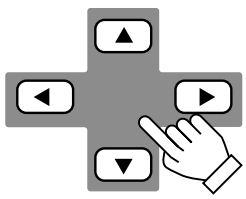

▲: Upper part of the image will be displayed.
▼: Lower part of the image will be displayed.
◄: Left side part of the image will be displayed.
►: Right side part of the image will be displayed.

Notes

- This function will not work with some signal sources (UXGA, etc). In this case, the DIGITAL ZOOM inhibit message appears for a few seconds, as shown on the left. To forcibly clear this message, press the EXIT button.
- The quality of the zoomed image reduces in comparison with the original one.
- To return to the original size (×1.0) and original position, press the PRESET button while "Digital zoom" is displayed on the screen.

ENGLISH

Menu Operations

You can adjust picture quality, set functions, get information on the input video signal, etc. using the menus. From the following menu transition diagrams, you can see the overall menus and basic button operation in menu mode. Note that there are three menu modes, No signal menu mode, video menu mode and PC menu mode. When the MENU button is pressed, the projector enters one of these modes by judging the input signal being received.

■ Menu Transition Diagram in No signal Menu Mode

This is displayed if there is no signal from the selected input terminal.

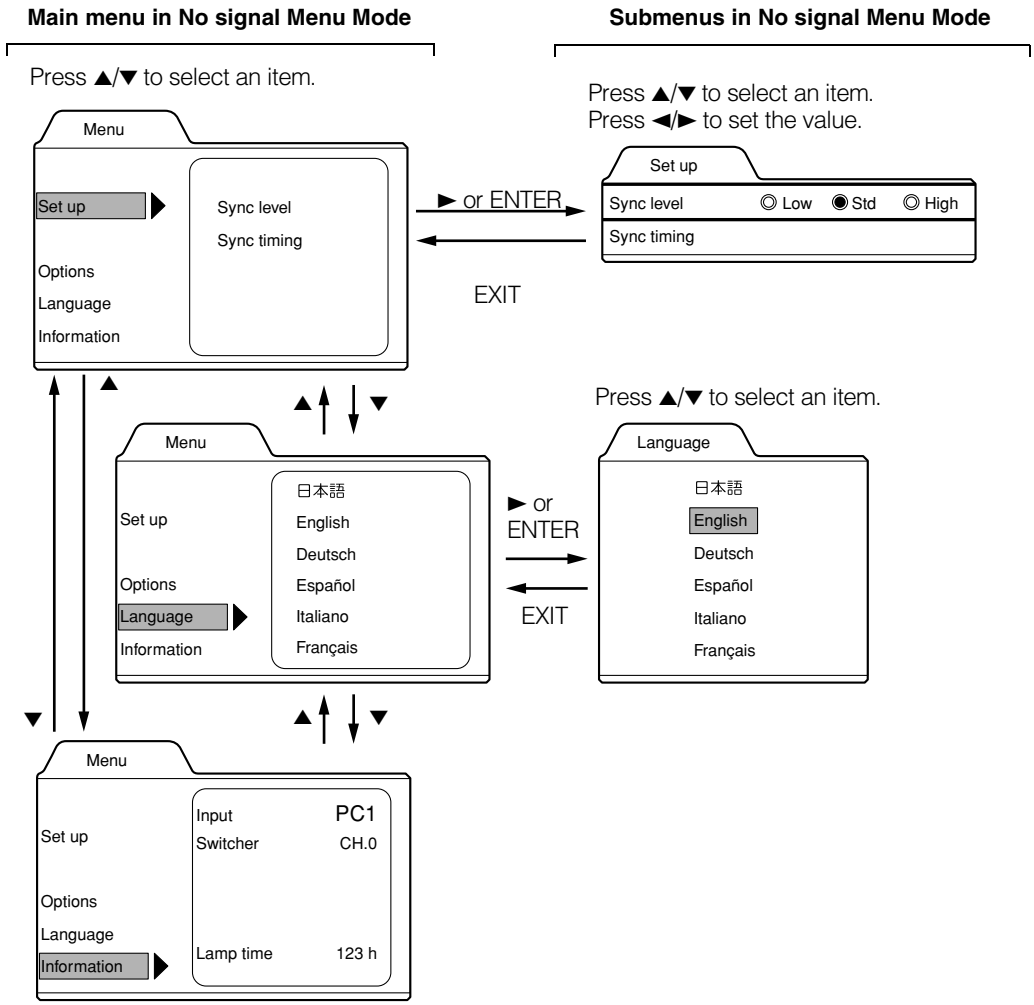

■ Quick Reference Guide for No signal Menu Mode

Main Menu in No signal Menu Mode

- Set up
  - Sync level: Low. Std*. High.
  - Sync timing: 3-5
- Options
  - Flip H: OFF* / ON (Select for upside-down hanging on the ceiling.)
  - Flip V: OFF* / ON (Select for upside-down hanging on the ceiling.)
  - RS-232C [bps]: Selectable baud rate (transmission speed). 9600 / 19200*
  - Sleep time [min]: Selectable sleep times. If no-signal condition continues for the period of selected time (Unit: Minutes), the projector enters the stand-by mode. 15 / 30 / 60 / OFF*
- Language — Language for on-screen display.
  - Japanese / English* / German / Spanish / Italian / French
- Information
  - Input: Shows the terminal name selected by the VIDEO or PC button. (Y/C, VIDEO, COMP, PC1, PC2 or DVI)
  - Switcher: Has no meaning. This display currently has no meaning. (“CH.0” is usually displayed to indicate that it is not being used.)
  - Lamp time: Accumulated used hours of the light-source lamp.

■ Menu Transition Diagram in Video Menu Mode

Main menu in Video Menu Mode

Submenus in Video Menu Mode

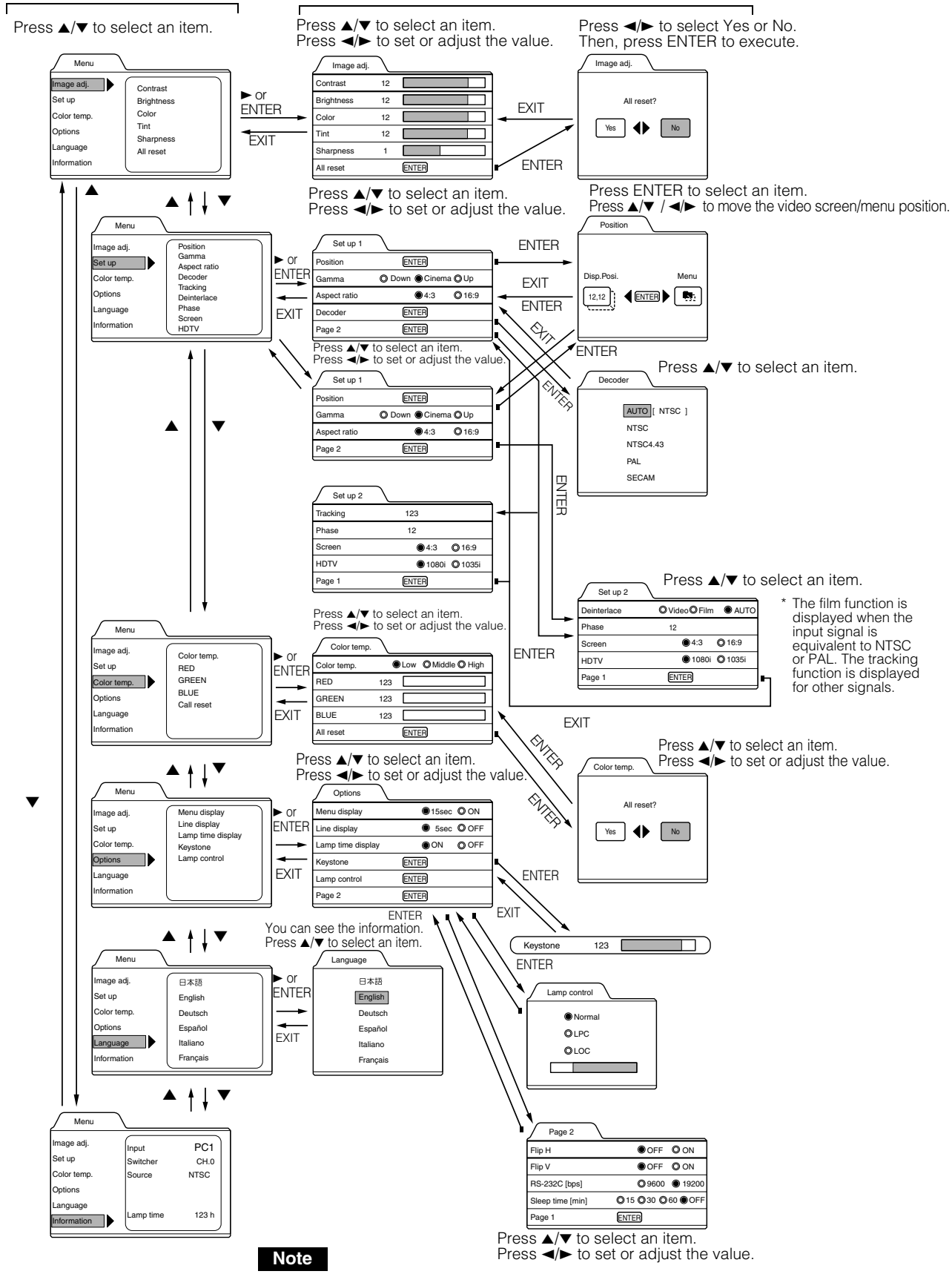

Note

- The display languages of the menus are set to “English” when the projector is bought. The display language can be selected from the following 6 languages: “日本語 (Japanese)”, “English (English)”, “Deutsch (German)”, “Español (Spanish)”, “Italiano (Italian)” and “Français (French)”. (Refer to page 46.)
  The language settings in the section are explained in “English”.

ENGLISH

■ Quick Reference Guide for Video Menu Mode

Main Menu in Video Menu Mode (While receiving video-device-related signals)

- Image adj. → (Refer to page 49)
  - Contrast: Contrast of the video image being projected can be adjusted. (–30 to +30, 0*)
  - Brightness: Brightness of the video image being projected can be adjusted. (–30 to +30, 0*)
  - Color: Color density of the video image being projected can be adjusted. (–30 to +30, 0*)
  - Tint: Tint of the video image being projected can be adjusted. (–30 to +30, 0*)
  - Sharpness: Sharpness of the video image being projected can be adjusted. (–5 to +5, 0*)
  - All reset: Resets above items to the factory set values.
    - Yes / No
- Set up 1
  - Position: Video screen position and menu position can be adjusted. → (Refer to page 51)
    - Disp. Posi. / Menu
  - Gamma: Image tone can be changed. Down/Cinema*/Up (Suitable for the cinema programes)→ (Refer to page 52)
  - Aspect ratio Selectable aspect ratio, 4:3*/16:9. → (Refer to page 52)
  - Decoder: Selectable color systems, Normally, set to AUTO. (Refer to page 45) (This item is displayed only when inputting VIDEO or Y/C.)
    - AUTO*/NTSC/NTSC4.43/PAL/SECAM
  - Page 2 Press ENTER to enter the “Set up 2” submenu
    - Tracking: Normally, no adjustment is required. The lateral size and display area of video image can be adjusted. (–128 to + 127) → (Refer to page 47)
    - Deinterlace: Set when watching movies which were recorded on film.
    - Phase: Flickering or dim picture image can be adjusted. (0 to 31) → (Refer to page 47)
    - Screen: Selectable screen’s aspect ratio. 4:3*/16:9 → (Refer to page 46)
    - HDTV: Selectable HDTV format. Normally, set to 1080i, 1080i*/1035i → (Refer to page 46)
    - Page 1: Press ENTER to return to “Page 1” submenu.
- Color temp.
  - Color temp.: Adjustable color temperature, Low/Middle*/High. Will be adjusted to correct reddish or blueish image.
  - RED: Adjusts the red level. (0 to 255, the adjustable range varies depending on signals)
  - GREEN: Adjusts the green level. (0 to 255, the adjustable range varies depending on signals)
  - BLUE: Adjusts the blue level. (0 to 255, the adjustable range varies depending on signals)
  - All-reset: Reset above items to the factory set values.
    - Yes/No
- Options → (Refer to page 54)
  Options 1
  - Menu display: 15sec* (Menu disappears in 15 seconds.) / ON (Menu stays on.)
  - Line display: 5sec* (Line display such as “VIDEO”, “Y/C”, “PC1”, or “PC2” appears on top right of the screen for 5 seconds when the VIDEO or PC button is pressed.) / OFF (Line display does not appear.)
  - Lamp time display:
    - ON*: Displays when the lamp use time reaches 1000 hours when set in the LPC or LOC mode.
    - OFF: Does not display when the lamp use time reaches 1000 hours when set in the LPC or LOC mode.
  - Keystone: Press ENTER to enter the Keystone submenu.
    - Keystone: Adjust to correct the trapezoidal distortion of the projected image. (–80 to +120, 0*)
  - Lamp control:
    - Normal*: Used as a normal lamp.
    - LPC: Lamp brightness is automatically controlled with time.
    - LOC: Lamp brightness is controlled in 7 levels (-6 to 0) irrespective of the time. This is set within the menu.
  - Page 2: Press ENTER to enter the “Page 2” submenu.
    - Flip H.: OFF* / ON (Select for upside-down hanging on the ceiling.)
    - Flip V: OFF* / ON (Select for upside-down hanging on the ceiling.)
    - RS-232C [bps]: Selectable baud rate (transmission speed). 9600 / 19200*
    - Sleep time [min]: Selectable sleep times. If no-signal condition continues for the period of selected time (Unite: Minutes), the projector enters the stand-by mode. 15 / 30 / 60 / OFF*
    - Page 1: Press ENTER to return to the “Page 1” submenu.
- Language Language for on-screen display. → (Refer to page 46)
  - Japanese / English* / German / Spanish / Italian / French
- Information → (Refer to page 56)
  - Input: Shows the terminal name selected by the VIDEO or PC button. (Y/C, VIDEO, COMP, PC1, PC2 or DVI)
  - Switcher: Has no meaning. This display currently has no meaning, (“CH.0” is usually displayed to indicate that it is not being used.)
  - Source: Shows the projected image’s type of video signal.
  - Lamp time: Accumulated used hours of the light-source lamp.

** : Factory set value.*

■ Menu Transition Diagram in PC Menu Mode

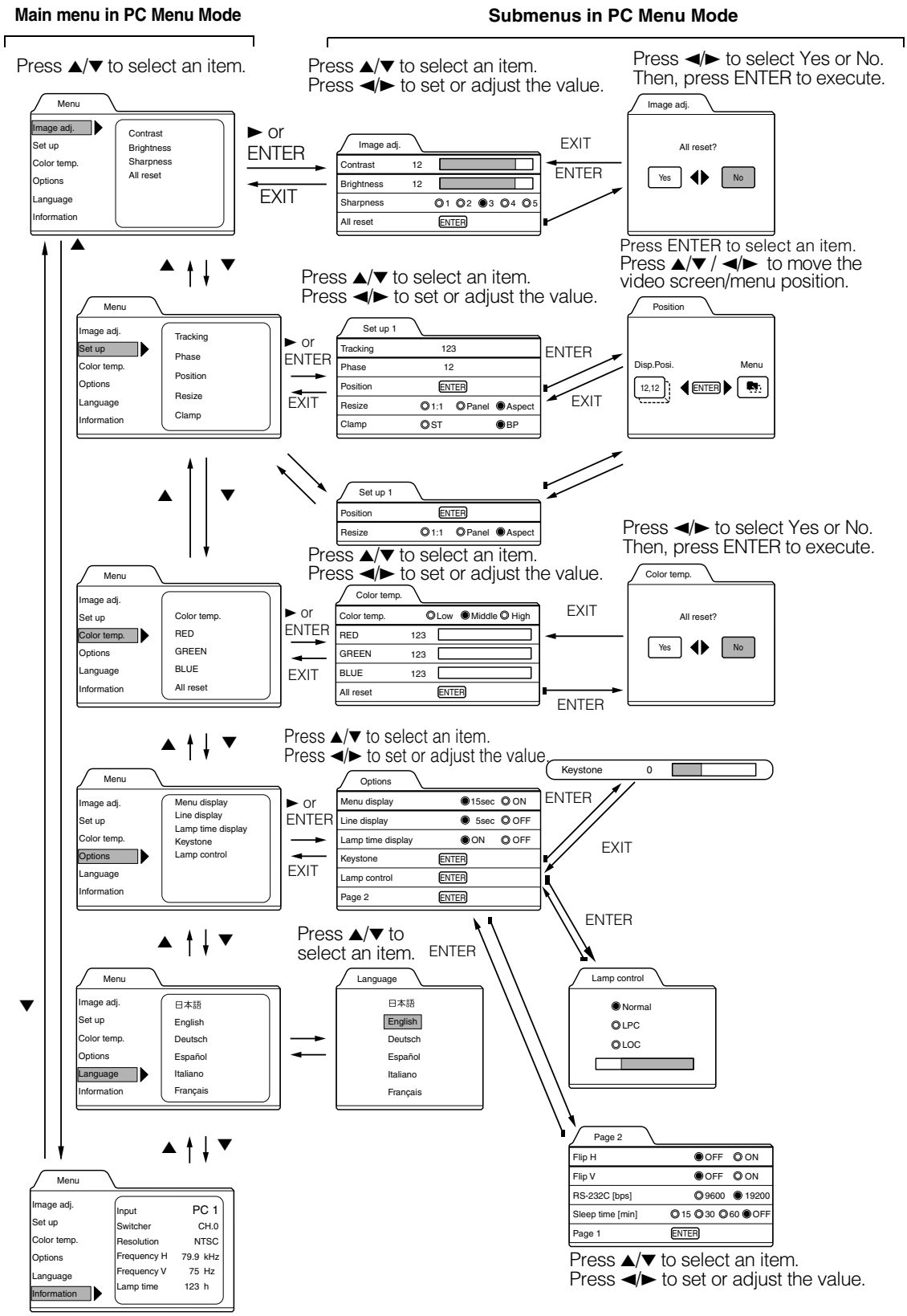

Note

- The display languages of the menus are set to “English” when the projector is bought. The display language can be selected from the following 6 languages: “日本語 (Japanese)”, “English (English)”, “Deutsch (German)”, “Español (Spanish)”, “Italiano (Italian)” and “Français (French)”. (Refer to page 46.) The language settings in the section are explained in “English”.

ENGLISH

■ Quick Reference Guide for PC Menu Mode

Main Menu in PC Menu Mode (While receiving computer-related signals)

- Image adj. → (Refer to page 49)
  - Contrast: Contrast of the picture image being projected can be adjusted. (–30 to +30, 0*)
  - Brightness: Brightness of the picture image being projected can be adjusted. (–30 to +30, 0*)
  - Sharpness: Adjust the outline of letters etc. (1 / 2 / 3 / 4 / 5, 3*)
  - All reset: Resets above items to the factory set values.
    - Yes / No
- Set up
  - Tracking: The lateral size and display area of picture image can be adjusted. (–128 to +127) → (Refer to page 47)
  - Phase: Flickering or dim picture image can be adjusted. (0 to 31) → (Refer to page 47)
  - Position: Video screen position and menu position can be adjusted. → (Refer to page 51)
    - Disp. Posi. / Menu
  - Resize: The relationship between the number of pixels (resolution) and the screen can be selected. → (Refer to page 53)
    - "1:1": Picture image is projected with its original size.
    - Panel: Picture image is enlarged to the full size.
    - Aspect*: Picture image is enlarged while maintaining the original aspect ratio.
  - Clamp: Selectable clamp position. Normally, set to "BP". ST / BP*
- Color temp.
  - Color temp.: Adjustable color temperature, Low/Middle* /High. Will be adjusted to correct reddish or blueish image.
  - RED: Adjusts the red level. (o to 255, the adjustable range varies depending on signals)
  - GREEN: Adjusts the green level. (o to 255, the adjustable range varies depending on signals)
  - BLUE: Adjusts the blue level. (o to 255, the adjustable range varies depending on signals)
  - All-reset: Reset above items to the factory set values.
    - Yes/No
- Options → (Refer to page 54)

  Options 1
  - Menu display: 15sec* (Menu disappears in 15 seconds.) / ON (Menu stays on.)
  - Line display: 5sec* (Line display such as "PC1" or "PC2" appears on top right of the screen for 5 seconds when the VIDEO or PC button is pressed.) / OFF (Line display does not appear.)
  - Lamp time display:
    - ON*: Displays when the lamp use time reaches 1000 hours when set in the LPC or LOC mode.
    - OFF: Does not display when the lamp use time reaches 1000 hours when set in the LPC or LOC mode.
  - Keystone: Press ENTER to enter the Keystone submenu.
    - Keystone: Adjust to correct the trapezoidal distortion of the projected image. (–80 to +128, 0*)
  - Lamp control:
    - Normal*: Used as a normal lamp.
    - LPC: Lamp brightness is aLutomatically controlled with time.
    - LOC: Lamp brightness is controlled in 7 levels (-6 to 0) irrespective of the time. This is set within the menu.
  - Page 2: Press ENTER to enter the "Page 2" submenu.
    - Flip H: OFF* / ON (Select for upside-down hanging on the ceiling.)
    - Flip V: OFF* / ON (Select for upside-down hanging on the ceiling.)
    - RS-232C [bps]: Selectable baud rate (transmission speed). 9600 / 19200*
    - Sleep time [min]: Selectable sleep times. If no-signal condition continues for the period of selected time (Unite: Minutes), the projector enters the stand-by mode. 15 / 30 / 60 / OFF*
    - Page 1: Press ENTER to return to the "Page 1" submenu.
- Language: Language for on-screen display. → (Refer to page 46)
  - Japanese / English* / German / Spanish / Italian / French
- Information → (Refer to page 56)
  - Input: Shows the terminal name selected by the PC button. (PC1 or PC2)
  - Switcher: This display currently has no meaning. ("CH.0" is usually displayed to indicate that it is not being used.)
  - Resolution: Shows the resolution of the input signal being received. (Horizontal × Vertical) It may not be displayed correctly with some input signals.
  - Frequency H: Shows the horizontal frequency of the input signal being received. (kHz)
  - Frequency V: Shows the vertical frequency of the input signal being received. (Hz)
  - Lamp time: Accumulated used hours of the light-source lamp.

** : Factory set value.*

Basic Menu Operation

When the MENU button is pressed, the projector enters Video or PC menu mode by responding to the input signal being received.

Video menu mode:
Enters this mode when video-device-related signals are input from the following devices.
- Video devices connected to the VIDEO IN (Y/C, VIDEO and COMP) terminals.

PC menu mode:
Enters this mode when computer-related signals are input from the following devices.
- A computer connected to the PC 1 terminal.
- A computer connected to the PC 2 terminal, which outputs analog RGB, V, H/Cs signals.
- A computer connected to the DVI terminal.

1 Press the MENU button.

The main menu is displayed on the screen.

Remote control unit **Projector**

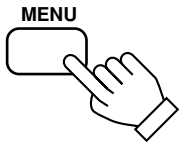

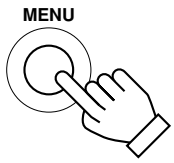

2 Press the cursor button ▲ or ▼ to select an item in the main menu.

Remote control unit **Projector**

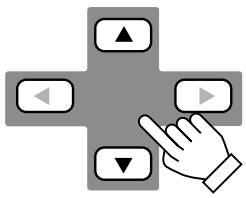

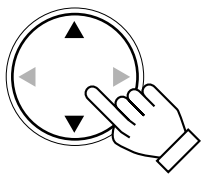

3 Press the cursor button ► or the ENTER button to enter the submenu.

The submenu corresponding to the item selected in step 2 is displayed on the screen.

** When you selected "Information" in step 2, no submenu is available.*

Remote control unit **Projector**

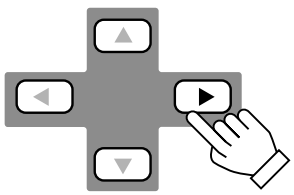

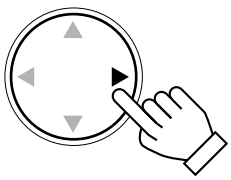

4 Press the cursor button ▲ or ▼ to select an item in the submenu.

When a "Language" has been selected in step 2, press to set the language.

Remote control unit **Projector**

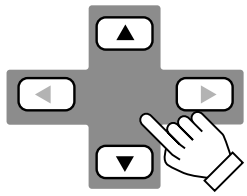

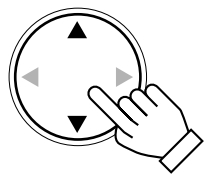

5 Press the cursor button ◄ or ► to set or adjust the value.

Remote control unit **Projector**

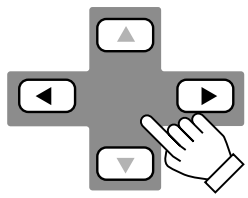

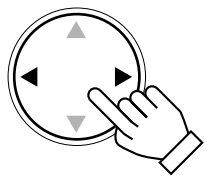

When an item which has the "ENTER" message has been selected in step 4, press the ENTER button to move to the next submenu.
- All reset → (Refer to page 49)
- Position → (Refer to page 51)
- Decoder → (Refer to page 45)
- Keystone → (Refer to page 54)
- Page 1 → (Refer to page 54)
- Page 2 → (Refer to page 54)

To exit the main menu:
- While the main menu is displayed, press the MENU button. The main menu disappears and the original picture image resumes.

To exit the submenu:
- While the submenu is displayed, press the EXIT button. The menu returns to the previous menu.
- To exit the menu mode directly, press the MENU button. The submenu disappears and the original video image is restored.

ENGLISH

Basic Menu Operation (Cont.)

■ Basic Button Functions in the Menu Mode

Button	Function
MENU	Enters the main menu or exits the menu mode.
Cursor button ▲/▼	Selects an item in the menu. Pressing ▼ or ▲ will scroll the item in the menu.
Cursor button ◄/►	Sets or adjusts the value.
PRESET	If pressed while the keystone setting submenu is displayed, the value is set to “0”.
EXIT	Returns to the previous menu.
ENTER	Used to enter the submenu from the main menu. Used to enter the next submenu if “ENTER” is displayed in the selected item.

■ Remote control unit

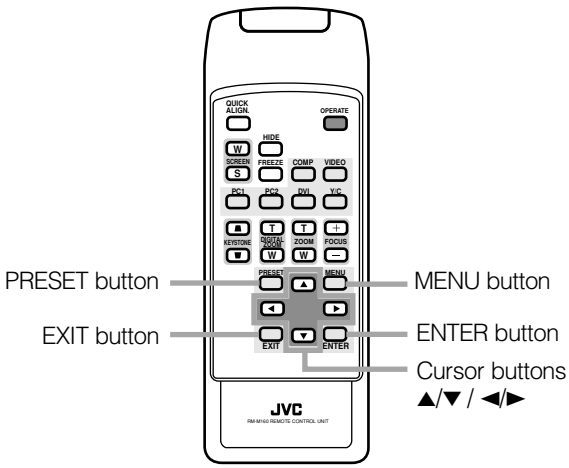

■ Projector

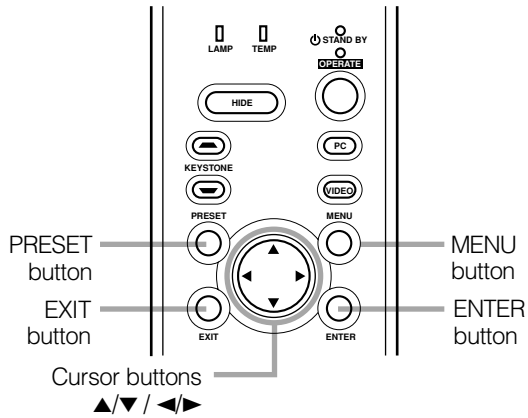

■ Video menu mode

Video main menu

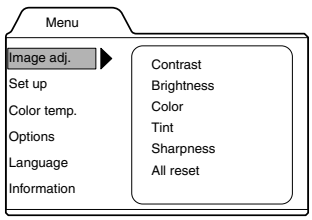

Press ▲/▼ to select an item.

► or ENTER →

← EXIT

Video submenu

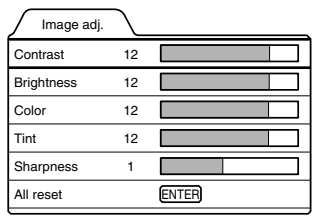

Press ▲/▼ to select an item.
Press ◄/► to set or adjust the value.

■ PC menu mode

PC main menu

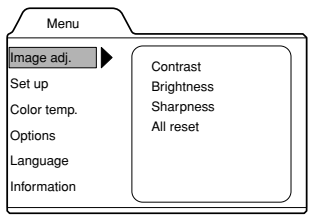

Press ▲/▼ to select an item.

► or ENTER →

← EXIT

PC submenu

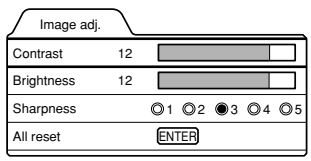

Press ▲/▼ to select an item.
Press ◄/► to set or adjust the value.

Changing the Color System (Video Menu Mode Only)

This function is available only in Video menu mode.
The menu is only displayed when there is a signal for the AV IN (Y/C, VIDEO and COMP) terminal.
Normally, use the color system in AUTO. If operation in AUTO is unstable, such as color not being shown, set to a dedicated color system in accordance with the color system of the video signal being input.

1 Press the MENU button.

The main menu appears on the screen.

2 Select "Set up" with the cursor button ▲ or ▼, and press ► or the ENTER button.

The "Set up 1" submenu appears on the screen.

3 Select "Decoder" with the cursor button ▲ or ▼, and press the ENTER button.

The "Decoder" submenu appears on the screen.

Video submenus

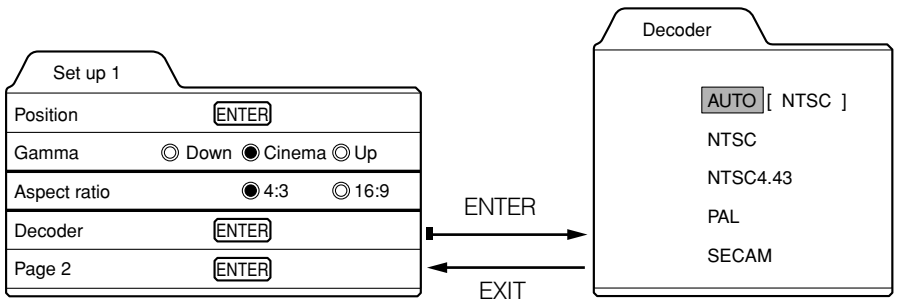

4 Set the color system with the cursor button ▲ or ▼.

AUTO: Normally, set to "AUTO". (Factory set value)
The color system of a video signal being input is automatically identified and displayed in [ ].
In [ ], B/W (Black & White), NTSC, NTSC4.43, PAL or SECAM will be displayed. (It is not always displayed.)
For example, AUTO [NTSC] shows that the NTSC signal is being received.
NTSC: Dedicated to NTSC.
NTSC4.43: Dedicated to NTSC4.43.
PAL: Dedicated to PAL.
SECAM: Dedicated to SECAM.

5 Press the EXIT button to return to the previous menu or press the MENU button to exit the menu mode.

ENGLISH

Changing the Language Display

The on-screen language is set to “English” when shipped from the factory. When you want to change to another language, set it as follows.

1 Press the MENU button.

The main menu appears on the screen.

2 Select “Language” with the cursor button ▲ or ▼, and press ► or the ENTER button.

The “Language” submenu appears on the screen.

日本語	:	Japanese
English	:	English
Deutsch	:	German
Español	:	Spanish
Italiano	:	Italian
Français	:	French

3 Set the language with the cursor button ▲ or ▼.

4 Press the EXIT button to return to the previous menu or press the MENU button to exit the menu mode.

Memo

About language display

Some words in the menu and messages such as “Quick Alignment”, “Keystone”, “VIDEO” and “NTSC” are shown only in English.

Changing the Screen aspect ratio/HDTV format (Video Menu Mode Only)

1 Press the MENU button.

The main menu appears on the screen.

2 Select “Set up” with the cursor button ▲ or ▼, and press ► or the ENTER button.

The “Set up 1” submenu appears on the screen.

3 Select “Set up 2” with the cursor button ▲ or ▼, and press ► or the ENTER button.

The “Set up 2” submenu appears on the screen.

4 Select “Screen” or “HDTV” with the cursor button ▲ or ▼.

5 Adjust the Screen aspect ratio or HDTV format with the cursor button ◄ or ►.

To adjust multiple items, repeat 4 and 5.

Adjustment item	Button	Adjustment content
Screen	◄ or ►	Select according to the aspect ratio of the screen used. 4:3 16:9
HDTV	◄ or ►	Set the number of effective scanning lines. Normally, select 1080i. 1080i: 1035i:

6 Press the EXIT button to return to the previous menu or press the MENU button to exit the menu mode.

Adjusting Tracking/Phase

Normally, tracking and phase adjustments are automatically carried out when a video signal is input to the projector for the first time, or when the QUICK ALIGN. button on the remote control is pressed.
However, you can manually adjust the tracking and phase on the menu.

If a wide stripe appears on the screen, adjust the lateral size of the picture image and the display area (tracking adjustment) so the stripe disappears.
Also, if text projected on the screen appears flickers or appears dim, adjust phase adjustment so it becomes clear.

1 Press the MENU button.

The main menu appears on the screen.

2 Select “Set up” with the cursor button ▲ or ▼, and press ► or the ENTER button.

The “Set up 1” (video mode) or “Set up” submenu appears on the screen.
In video mode: Select set up 2 with the cursor ▼ or ▲, and press ENTER button.
The “Set up 2” submenu appears on the screen.

Video submenu

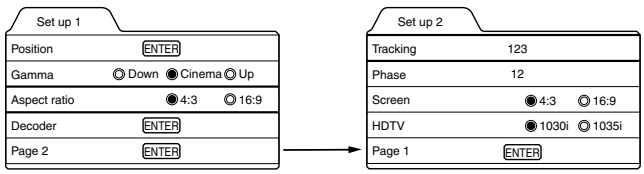

Decoder is only displayed when there is a signal for the AV IN terminal.

PC submenu

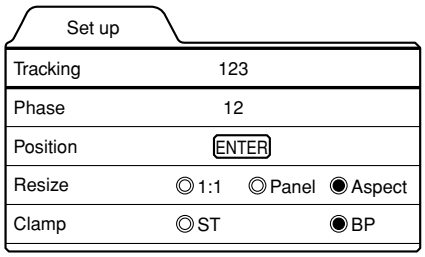

3 Select “Tracking” or “Phase” with the cursor button ▲ or ▼.

4 Adjust the tracking or phase with the cursor ◄ or ►.

Adjust the tracking and phase of the picture image being projected. To adjust the phase, first check for correct tracking adjustment.
**To adjust multiple items, repeat 3 and 4.*

Adjustment item	Button	Adjustment content
Tracking	◄ or ►	The picture image shrinks laterally (right-to-left) or extends laterally (left-to-right). (–128 ↔ +127)
Phase	◄ or ►	Set to a position where text appears clear. (0 ↔ 31)

5 Press the EXIT button to return to the previous menu or press the MENU button to exit the menu mode.

Note

- A dim image could be caused by insufficient adjustment of brightness and contrast. Before adjusting phase, make sure that brightness and contrast are correctly adjusted. To adjust them, refer to “Adjusting Picture Quality” on page 49.

ENGLISH

Set up for Watching Image Software (Video Menu Mode Only)

This unit has a function which allows you to project movies, which were recorded on film, in the best possible conditions. (Function to convert 2-3 pull-down interlace scans to progressive scans)

Normally use set to AUTO.

1 Press the MENU button.

The main menu appears on the screen.

2 Select “Set up” with the cursor button ▲ or ▼, and press ► or the ENTER button.

The “Set up 1” submenu appears on the screen.

3 Select “Set up 2” with the cursor button ▲ or ▼, and press ► or the ENTER button.

The “Set up 2” submenu appears on the screen.

4 Select “Deinterlace” with the cursor button ▲ or ▼.

5 Select the Deinterlace function mode with the cursor button ◄ or ►.

Video: When watching images recorded with a video camera
Film: When watching images recorded on film
AUTO: The setting is changed automatically

6 Press the EXIT button to return to the previous menu or press the MENU button to exit the menu mode.

Note

- Operates when the signal is an NTSC or PAL interlace signal. Does not operate for other signals. (The menu is not displayed when other signals are inputted.)

Adjusting Picture Quality

In the “Image adj.” submenu, adjust brightness, contrast, sharpness, etc. to obtain the desired picture quality. Note that the adjustment items differ in Video menu mode and PC menu mode.

1 Press the MENU button.

The main menu appears on the screen.

2 Select “Image adj.” with the cursor button ▲ or ▼, and press ► or the ENTER button.

The “Image adj.” submenu appears on the screen.

Video submenu

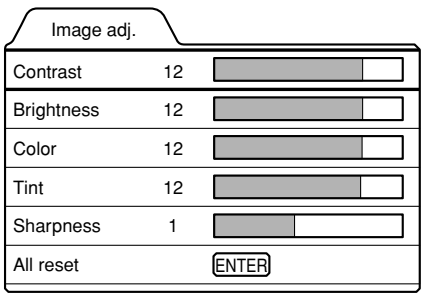

PC submenu

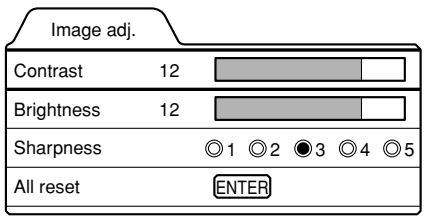

3 Select the item to be adjusted with the cursor button ▲ or ▼.

**“Color” and “Tint” are shown in Video submenu only.*

4 Make adjustment with the cursor ◄ or ►.

**To adjust multiple items, repeat 3 and 4.*

Adjustment item	Button	Adjustment content
Contrast	◄ or ►	Gets lower/higher. (–30 ↔ 0* ↔ +30)
Brightness	◄ or ►	Gets darker/brighter. (–30 ↔ 0* ↔ +30)
Color	◄ or ►	Gets softer/deeper. (–30 ↔ 0* ↔ +30) (Video menu mode only)
Tint	◄ or ►	Gets reddish/greenish. (–30 ↔ 0* ↔ +30) (Video menu mode only)
Sharpness	◄ or ►	Gets softer/sharper. • Video menu mode: (–5 ↔ 0* ↔ +5) • PC menu mode: (1 ↔ 3* ↔ 5) **Note** • When in the PC menu mode, if the resize function in the PC submenu is set to “1:1”, the image quality will not change even if the value is changed.
All reset	ENTER	Resets above items to the factory set values. How to operate is mentioned below (next page).

** : Factory set value*

■ To perform All Reset

- In the Image adj. submenu, select “All reset” with the cursor button ▲ or ▼, and press the ENTER button. Then, the “All reset” submenu appears on the screen.
- Press the cursor button ◄ to select “Yes”, and then press the ENTER button.
- All items in the “Image adj.” submenu are reset to the factory set values and the menu returns to the previous one.
  To exit the “All reset” submenu without performing All reset, select “No” with the cursor button ► and, press the ENTER button.

(To be continued on the next page)

ENGLISH

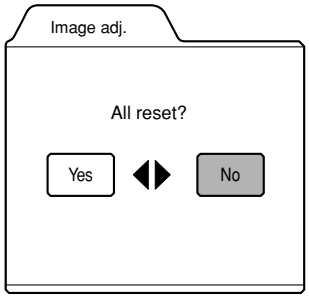

5 Press the EXIT button to return to the previous menu or press the MENU button to exit the menu mode.

Memo

In some adjustments, the level bar changes according to the set value. (The setting value is also displayed at the left of the level bar.)

Adjusting Color temperature

1 Press the MENU button.

The main menu appears on the screen.

2 Select "Color temp." with the cursor button ▲ or ▼, and press ► or the ENTER button.

The "Color temp." submenu appears on the screen.

3 Select "Color temp." with the cursor button ▲ or ▼.

4 Adjust the color temperature with the cursor button ◄ or ►.

Low: Color temperature decreases (image becoming reddish).
Middle: Results in middle color temperature. (Factory set position).
High: Color temperature increases (image becoming blueish).

5 Select "RED" or "GREEN" or "BLUE" with the cursor button ▲ or ▼.

6 Fine adjust the color temperature with the cursor button ◄ or ►.

To adjust multiple items, repeat 5 and 6.

Adjustment item	Button	Adjustment content
RED	◄ or ►	Adjusts the red level. (0 to 255)
GREEN	◄ or ►	Adjusts the green level. (0 to 255)
BLUE	◄ or ►	Adjusts the blue level. (0 to 255)

■ To perform All Reset

- In the Color temp. submenu, select "All reset" with the cursor button ▲ or ▼, and press the ENTER button. Then, the "All reset" submenu appears on the screen.
- Press the cursor button ◄ to select "Yes", and then press the ENTER button.
- All items in the Color temp. submenu are reset to the factory set values and the menu returns to the previous one.
  To exit the "All reset" submenu without performing All reset, select "No" with the cursor button ► and, press the ENTER button

7 Press the EXIT button to return to the previous menu or press the MENU button to exit the menu mode.

Adjusting the Video Screen/Menu Position

The position of the video screen and the menu on the video screen can be adjusted. You can finely adjust the video screen position. The menu will move widely on the video screen.

1 Press the MENU button.

The main menu appears on the screen.

2 Select “Set up” with the cursor button ▲ or ▼, and press ► or the ENTER button.

The “Set up 1” or “Set up” submenu appears on the screen.

Video submenu (“Set up 1” submenu)

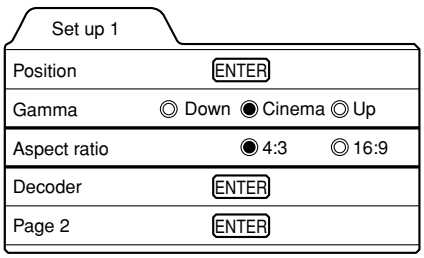

Decoder is only displayed when there is a signal for the AV IN terminal.

PC submenu (Set up submenu)

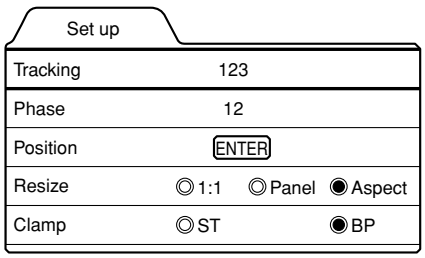

3 Select “Position” with the cursor button ▲ or ▼, and press the ENTER button.

The “Position” submenu appears on the screen.

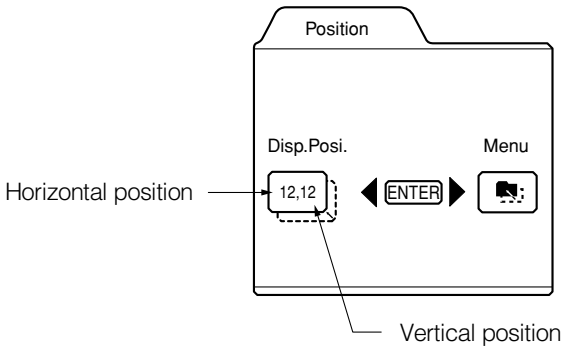

4 Press the ENTER button to select “Disp.Posi.” or “Menu”.

Disp.Posi. (Display Position):The video screen position (display position) can be adjusted.
Menu:The menu position can be adjusted.

5 Press the cursor button ▲, ▼, ◄ or ► to move the video screen (display) or the menu.

**Repeat 4 and 5 to move both video screen (display) and menu positions.*

Adjustment item	Button	Adjustment content
Disp.Posi. - H	◄ or ►	The video screen moves to the left or right. (–30 ↔ +30)
Disp.Posi. - V	▲ or ▼	The video screen moves up or down. (–30 ↔ +30)
Menu - H	◄ or ►	The menu moves to the left or right. (Left, center*, right)
Menu - V	▲ or ▼	The menu moves up or down. (Top, center*, bottom)

** : Factory set value*

6 Press the EXIT button to return to the previous menu or press the MENU button to exit the menu mode.

ENGLISH

Changing the Image Gamma/Aspect Ratio (Video Menu Mode Only)

The image Gamma (Down, Cinema or Up) and the aspect ratio (4:3 or 16:9) are selectable in Video menu mode.

1 Press the MENU button.

The main menu appears on the screen.

2 Select “Set up” with the cursor button ▲ or ▼, and press ► or the ENTER button.

The “Set up 1” submenu appears on the screen.

Video submenu

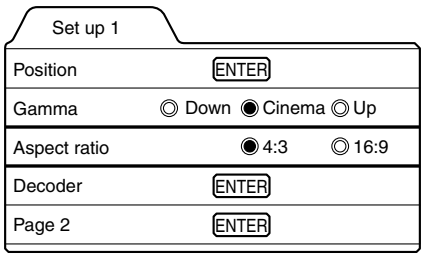

Decoder is only displayed when there is a signal for the Video IN terminal.

3 Select “Gamma” or “Aspect ratio” with the cursor button ▲ or ▼.

4 Adjust the image tone or aspect ratio with the cursor ◄ or ►.

**To adjust multiple items, repeat 3 and 4.*

Adjustment item	Button	Adjustment content
Gamma	◄ or ►	The image Gamma projected on the screen can be changed. Down : Suitable for projecting the video programs. Cinema* : Normally use in this mode. Up : Suitable for projecting the cinema programs.
Aspect ratio	◄ or ►	Sets the vertical-to-horizontal ratio (4:3 or 16:9) of the video image projected. “4:3*” : The aspect ratio of the projected image becomes 4:3. Set it to 4:3 for video of NTSC, NTSC4.43, PAL, SECAM. “16:9” : The aspect ratio of projected image becomes 16:9. Set it to 16:9 for Hi-Vision devices (W-VHS VCR, etc.).

** : Factory set value*

5 Press the EXIT button to return to the previous menu or press the MENU button to exit the menu mode.

Changing the Image Size - Resize Function (PC Menu Mode Only)

The picture image projected can be selectable with the Resize function which is available only in PC menu mode. You can choose the video image size projected from the following: (Factory setting is “Aspect”.)

“1:1”: The image is displayed at the input resolution. The picture image projected is not enlarged even if its number of pixels (resolution) is smaller than that of the projector’s D-ILA element (1365 pixels × 1024 pixels).

Resize: 1:1

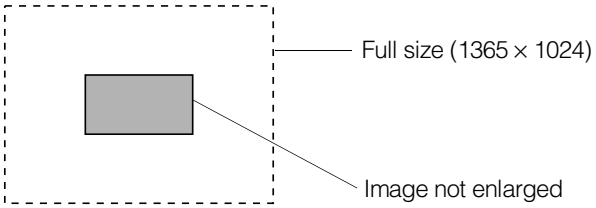

Panel: The picture image projected is virtually enlarged to the full size (1365 pixels × 1024 pixels). The horizontal and vertical enlargement ratio will differ depending on the original image and the image will be deformed.

Resize: Panel

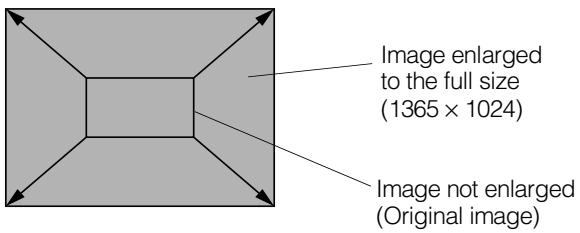

Aspect: While maintaining the original aspect ratio, the video image projected is virtually enlarged until either the horizontal or vertical side reaches the full size (1365 pixels × 1024 pixels).

Resize: Aspect

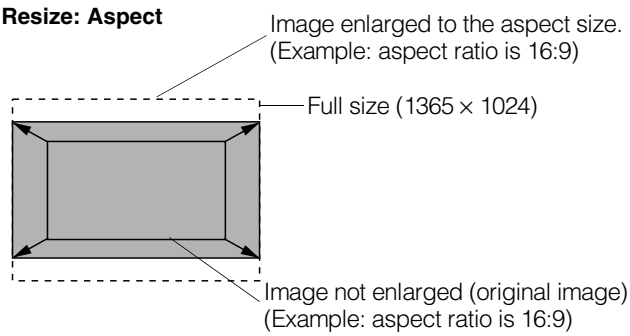

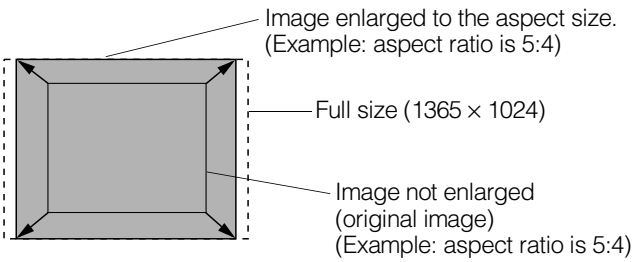

1 Press the MENU button.

The main menu appears on the screen.

2 Select “Set up” with the cursor button ▲ or ▼, and press ► or the ENTER button.

The “Set up” submenu appears on the screen.

PC submenu

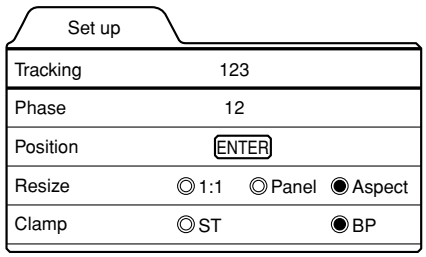

3 Select “Resize” with the cursor button ▲ or ▼.

4 Choose “1:1”, “Panel”, or “Aspect” with the cursor button ◄ or ►.

5 Press the EXIT button to return to the previous menu or press the MENU button to exit the menu mode.

Changing the Clamp pulse position (PC Menu Mode Only)

When the image is too dark or bright, or when the image is unstable, switching the position may improve the image quality. Normally, set to “BP”.

1 Press the MENU button.

The main menu appears on the screen.

2 Select “Set up” with the cursor button ▲ or ▼, and press ► or the ENTER button.

The “Set up” submenu appears on the screen.

3 Select “Clamp” with the cursor button ▲ or ▼.

4 Choose “ST” or “BP” with the cursor button ◄ or ►.

5 Press the EXIT button to return to the previous menu or press the MENU button to exit the menu mode.

ST: Sync Tip BP: Back Porch

ENGLISH

Setting and Adjusting Other Functions (OPTIONS)

Various functions are provided as shown in the “Options 1” and “Options 2” submenus.
You can set or adjust each function, as required.

1 Press the MENU button.

The main menu appears on the screen.

2 Select “Options” with the cursor button ▲ or ▼, and press ► or the ENTER button.

The “Options 1” submenu appears on the screen.

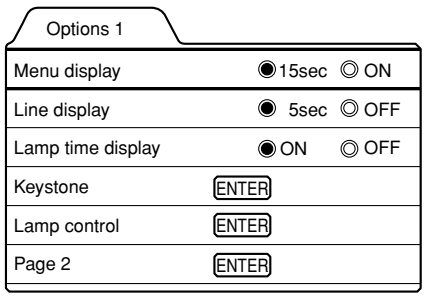

3 Select the item to be adjusted with the cursor button ▲ or ▼.

4 Make adjustment with the cursor ◄ or ►.

- While the keystone item is selected, press the ENTER button to display the “Keystone” submenu.
- To enter the “Page 2” submenu, select “Page 2” with the cursor button ▲ or ▼, and press the ENTER button.
- To return to the “Page 1” submenu from the “Page 2” submenu, select “Page 1” with the cursor button ▲ or ▼, and press the ENTER button.

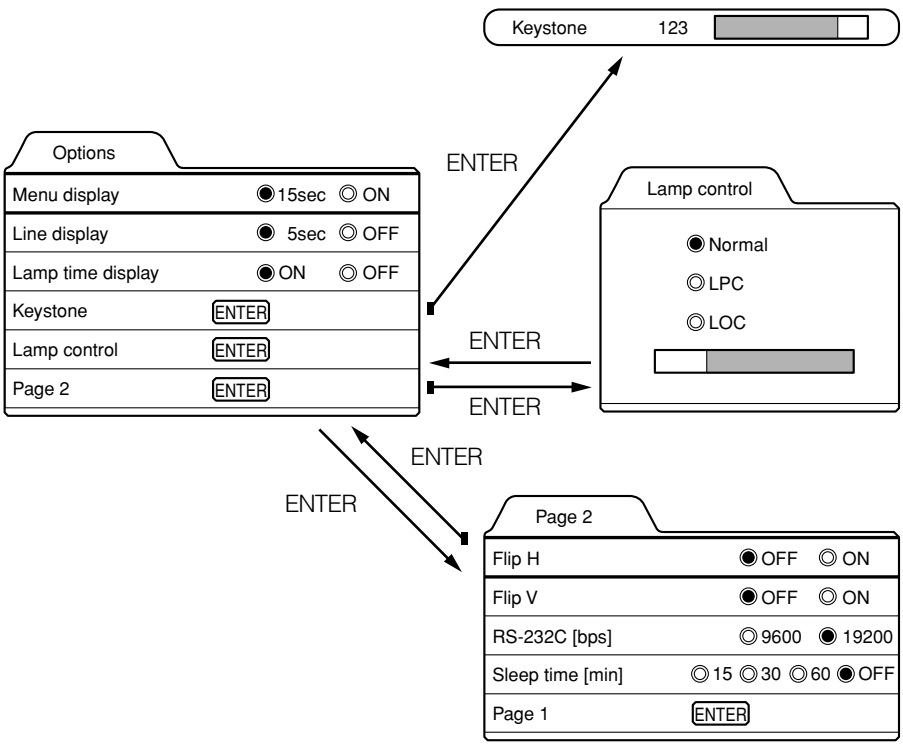

To adjust multiple items, repeat 3 to 4.
To reset the keystone (trapezoidal distortion of the picture image) to the original setting, press the PRESET button when the “Keystone” submenu appears on the screen.

Adjustment item	Button	Adjustment content
Menu display	◄ or ►	Sets whether to clear the menu display automatically or not. 15sec* : Clears the display automatically in about 15 seconds. ON : Does not automatically clear the menu display.
Line display	◄ or ►	Sets whether to show the line display (Y/C, VIDEO, COMP, PC1, PC2 or DVI) on top right of the screen or not when the VIDEO or PC button is pressed. 5sec* : Shows the line display for about 5 seconds. OFF : Does not show the line display.
Lamp time display	◄ or ►	Displays the lamp use time. ON* : Displays when the lamp use time reaches 1000 hours when set in the LPC or LOC mode. OFF : Does not display when the lamp use time reaches 1000 hours when set in the LPC or LOC mode.3
Keystone	ENTER	Press the ENTER button to enter the keystone submenu. In the keystone submenu, press ◄ or ► to correct trapezoidal distortion of the projected image. (–80 ↔ 0* ↔ +128) To reset the keystone (trapezoidal distortion of the picture image) to the original setting (factory set value: 0), press the PRESET button when the “Keystone” submenu appears on the screen. To exit the keystone submenu, press the EXIT button.
Lamp control	ENTER	Press ENTER to enter the lamp control submenu. Normal* : Used as a normal lamp. LPC : Automatically controls the power used by the lamp and increases it in steps. When this mode is used, the brightness starts at approximately 70%. The decrease in brightness is slower than in “Normal” mode and this mode is best suited when using the projector continuously for long periods of time. ** “Lamp replacement” appears on the screen when the lamp use time exceeds 2000 hours.* LOC : The brightness can be set in seven levels (-6 to 0). Since the brightness can be set in steps, this is the mode best suited for adjusting multiple screens. This setting can also be changed while the projector is being used. To change the setting, choose LOC with the ▲/▼ cursors and choose the level with the ◄/► cursors.
Flip H	◄ or ►	Reverses image right-to-left. OFF* : For the front method. ON : For upside-down hanging from the ceiling.
Flip V	◄ or ►	Inverses image upside-down. OFF* : For normal setup. ON : For upside-down hanging from the ceiling.
RS-232C [bps]	◄ or ►	Sets the baud rate for transmission. 9600 : 9600 bps 19200* : 19200 bps
Sleep time [min]	◄ or ►	Sets the length of sleep time which automatically brings the projector into stand-by state. You can select one of the sleep times: 15, 30, 60 and 0 (OFF*) minutes.

** Factory set value*

5 Press the EXIT button to return to the previous menu or press the MENU button to exit the menu mode.

Note

• Refer to “Removing the Trapezoidal Distortion of the Image” on page 35 for more details about adjusting the keystone.

ENGLISH

Getting Information

You can get information on the input signal, accumulated used hours of light-source lamp, etc.

1 Press the MENU button.

The main menu appears on the screen.

2 Select “Information” with the cursor button ▲ or ▼.

The “Information” will be displayed in the main menu.
**No submenu can be selected.*

Video main menu

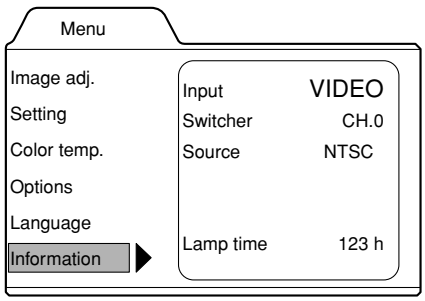

PC main menu

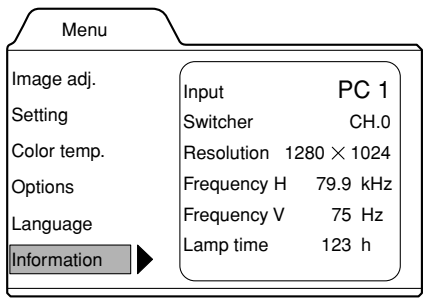

Input:	Shows the terminal name selected by the VIDEO or PC button. (Y/C, VIDEO or COMP, or PC1, PC2 or DVI)
Switcher:	This display currently has no meaning. This is reserved for future use. (“CH.0” is usually displayed to indicate that it is not being used.)
Source:	Shows the projected image’s type of video signal. (Video menu mode)
Resolution:	Shows the resolution of the video signal being received. (PC menu mode) It may not be displayed correctly with some input signals.
Frequency H:	Shows the horizontal frequency of the video signal being received. (PC menu mode)
Frequency V:	Shows the vertical frequency of the video signal being received. (PC menu mode)
Lamp time:	Accumulated used hours of the light-source lamp.

3 Press the MENU button to exit the menu mode.

Replacing the Fuse

A fuse is used to protect the power source of the projector. If the fuse is blown, replace it. When the power switch is turned on but no power is supplied to the projector, check the fuse. If there are any unclear points, contact the dealer where you purchased your projector, or consult the Service center.

CAUTION

- When replacing the fuse, use the same rating and type (12 A 250 V). Otherwise, a fire may occur and/or the projector may be damaged.

1 Turn off the main power switch and disconnect the power cord from both the projector and the wall outlet.

In stand-by state (the STAND BY indicator lights on), place the MAIN POWER switch of OFF [○] position.

2 Loosen the fuse holder to remove it.

To loosen the fuse holder, use a Phillips screwdriver.

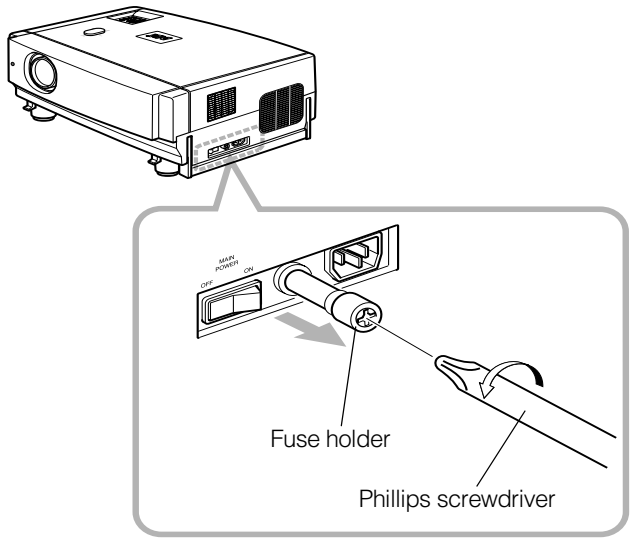

3 Remove the fuse from the fuse holder you just removed.

4 Install the new fuse (not supplied) into the fuse holder.

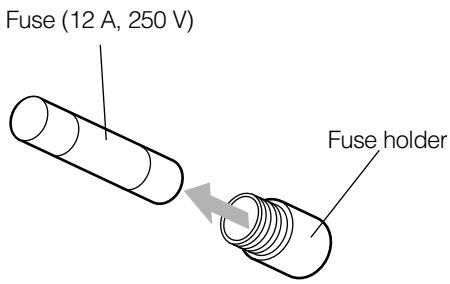

5 Reinstall the fuse holder into the projector.

To reinstall the fuse holder, use a Phillips screwdriver.

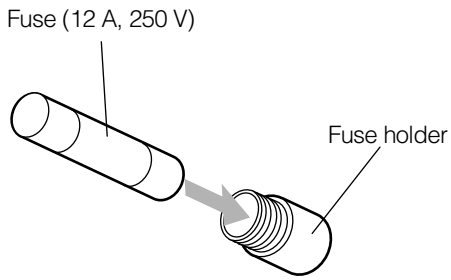

ENGLISH

Replacing the Light-Source Lamp

■ Light-source lamp and lamp use time

The light-source lamp has a service life of approximately 1000 hours.
[Average lamp life: 1000 hours (brightness half-life)]
When the light-source lamp approaches the end of its service life, degradation progresses rapidly. In NORMAL MODE, arrange for a new lamp (lamp unit) or replace the lamp after 900 hours. Depending on the usage conditions, the replacement time may be shorter.
(In LOC and LPC modes, the brightness of the lamp is electrically controlled and the replacement time is extended. Arrange for a new lamp (lamp unit) or replace the lamp after 1900 hours. Depending on the usage conditions, the replacement time may be shorter.)
If, even after adjusting the brightness or color, the video image is dark or the color is not correct, replace the lamp early.
The lamp use time can be checked. Look at the “Lamp time” which is displayed with the “Information” option in the menu. (Refer to page 40, 42.)

Contact the store from where you purchased the projector or the JVC service center for details about purchasing replacement lamps.
Replacement lamp (lamp unit) part number: BHL 5001-SU
The LAMP indicator and the message on the screen warn you that replacement of the lamp is required, as follows:

■ Projecting after the lamp has been used for more than 900 hours (NORMAL MODE)

Accumulated used hours of the light-source lamp

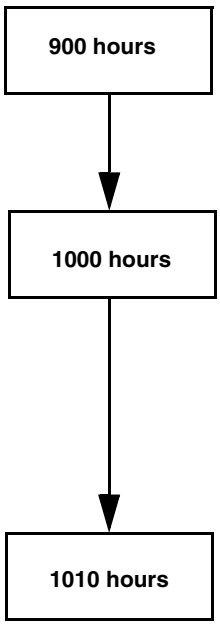

When the lamp use time reaches 900 hours:
The LAMP indicator lights on the projector.
When starting to project after 900 hours has been exceeded:
“Lamp replacement” appears on the screen.
** The message will disappear when any button is pressed.*
When the lamp use time exceeds 1000 hours:
The LAMP indicator blinks on the projector.
“Lamp replacement” appears on the screen and the word “Warning” blinks.
** To cancel this message, press the EXIT button.*
However, the same message will appear every hour.
** If the projector is put in stand-by mode or turned off after the lamp has been used for more than 1000 hours (but less than 2010 hours), it can not be turned back on again unless the light-source lamp is replaced with a new one.*
Replace with a new lamp (lamp unit) and reset the lamp time. (Refer to page 62.)
When the lamp use time reaches 1010 hours:
The projector is forcibly turned off.
The LAMP and OPERATE indicators blinks on the projector.
** The projector can not be turned on unless the lamp (lamp unit) is replaced with a new one and the lamp time is reset. (Refer to page 62.)*

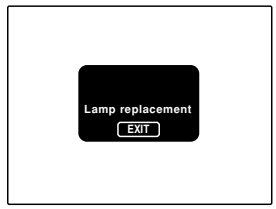

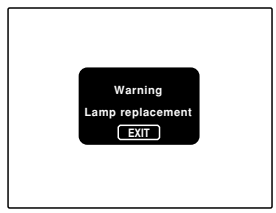

Note

• If the projector is not put in stand-by mode or turned off, it can be used until 2010 hours is reached.

■ Projecting after the lamp has been used for more than 1000 hours (LIGHT OUTPUT CONTROL MODE) (LAMP POWER CONTROL MODE)

Accumulated used hours of the light-source lamp

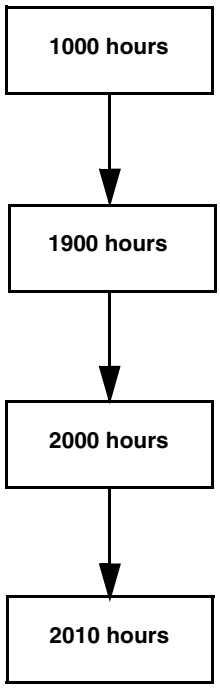

When the lamp use time reaches 1000 hours:
"1000h" and "Lamp replacement" appear on the screen.
** The messages will disappear when any button is pressed.*
** The time after which the display appears can be set with the OSD menu.*

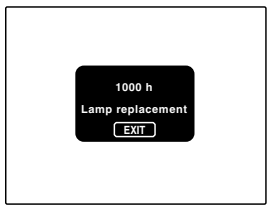

When the lamp use time exceeds 1900 hours:
The LAMP indicator blinks on the projector.
"Lamp replacement" appears on the screen.
** To cancel this message, press the EXIT button or display another menu.*
Every time the projector is turned on, the message appears.

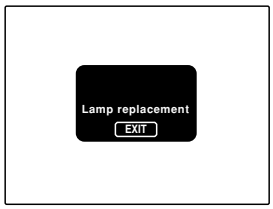

When the lamp use time exceeds 2000 hours:
The LAMP indicator blinks on the projector.
"Lamp replacement" appears on the screen and the word "Warning" blinks.
** To cancel this message, press the EXIT button.*
However, the same message will appear every hour.
** If the projector is put in stand-by mode or turned off after the lamp has been used for more than 2000 hours, it can not be turned back on again unless the light-source lamp is replaced with a new one.*
(If the projector is not put in stand-by mode or turned off, it can be used until 2010 hours is reached.)
Replace with a new lamp (lamp unit) and reset the lamp time. (Refer to page 62.)

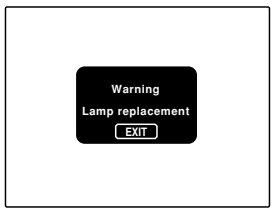

When the lamp use time reaches 2010 hours:
The projector is forcibly turned off.
The LAMP and OPERATE indicators blinks on the projector.
** The projector can not be turned on unless the lamp (lamp unit) is replaced with a new one and the lamp time is reset. (Refer to page 62.)*

ENGLISH

CAUTIONS

- If the projector is set up in a constricted place which is unsuitable for work, and if you perform replacement work there, this could cause injury. Move the projector to a place large enough for work, and then replace the light-source lamp.
- Use a genuine product for the light-source lamp. If you use other than a genuine product, this could cause a malfunction. Also, never use an old light-source lamp. This could cause marked degradation in performance or explode, possibly causing the projector to malfunction or broken pieces to injure you.
- Do not replace the light-source lamp immediately after the projector has been used. The temperature of the light-source lamp is still high and could cause a burn. Allow a cooling period of one hour or more before performing replacement.
- Before starting light-source lamp replacement work, turn off the MAIN POWER switch, and disconnect the power cord from the wall outlet. If you perform the replacement work with the power cord connected, this could cause injury or electric shock.
- The light-source lamp used in this projector is a high pressure mercury lamp. Be careful when disposing of the light-source lamp. If anything is unclear, please consult your dealer.

■ Be sure that the power cord is unplugged from the wall outlet.

1 Remove the lamp-replacement opening cover by loosening screws.

Loosen the two screws with a flat-end screwdriver.

Note

- The screws are fitted so that they do not come off the lamp-replacement opening cover.

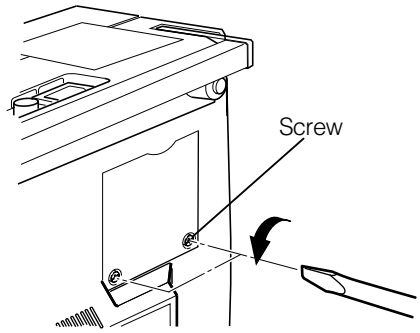

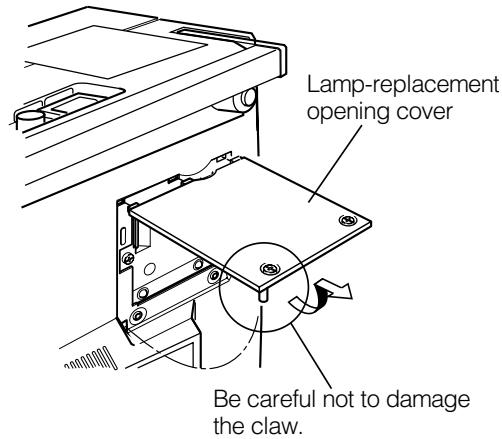

2 Loosen the screws, raise the handle, and pull out the light-source lamp.

Loosen the two screws with a flat-end screwdriver.

Note

- The screws are fitted so that they do not come off the light-source lamp.

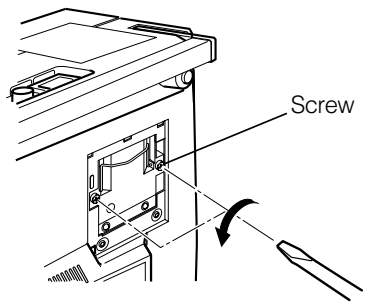

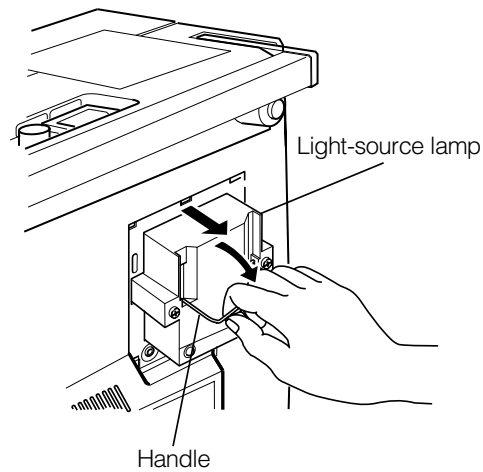

(To be continued on the next page)

3 Insert the new light-source lamp fully inside and fasten the screws.

Fasten the two screws with a flat-end screwdriver.

CAUTION

- Do not touch the glass surface of the light-source lamp directly with your hand as well as staining it. If you touch with a bare hand, oils and other substances on your hand may adhere to the lamp, possibly preventing it from performing as specified and therefore giving a shortened lamp life, a darkened screen, etc. To handle a new light-source lamp, hold it by the plastic part. Never touch the metal part or the front glass surface.

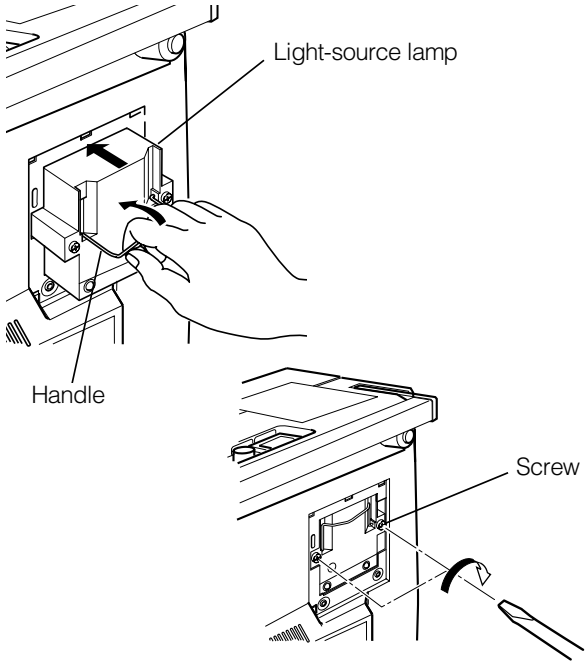

4 Replace the lamp-replacement opening cover and fasten the screws.

Fasten the two screws with a flat-end screwdriver.

CAUTIONS

- Install the light-source lamp and close the lamp-replacement opening cover correctly; otherwise, a safety switch is activated to prevent the projector from operating.
- If the claw on the lamp-replacement opening cover is damaged, the projector may not possibly operate. Then, replace with a new lamp-replacement opening cover.

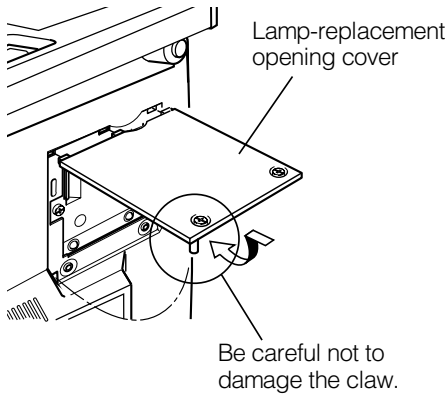

5 Reset the lamp use time.

Perform “Resetting the Lamp Use Time” on page 62.

ENGLISH

■ Resetting the Lamp Use Time

After replacing with a new light-source lamp, reset the lamp-time counter inside the projector to clear the accumulated lamp time to zero (0). After resetting, a new count will start for the new light-source lamp.

■ Projector's button

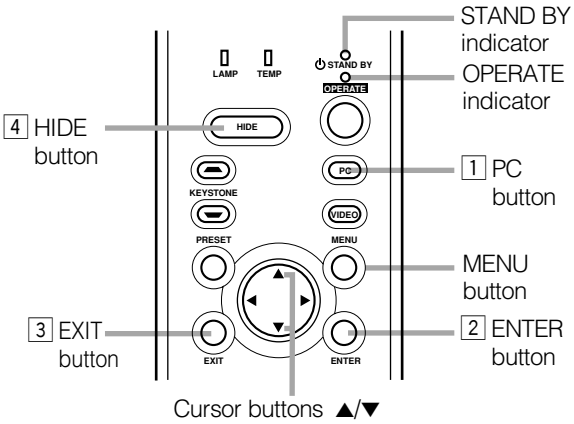

1 Turn on the MAIN POWER switch to go into stand-by mode.

In stand-by mode, the STAND BY indicator on the projector lights up.

2 Press the following buttons on the projector, sequentially.

1 **Momentary press the PC button.**

2 **Momentary press the ENTER button.**

3 **Momentary press the EXIT button.**

4 **Press and hold the HIDE button for two seconds or more.**

** During this sequence, the STAND BY and OPERATE indicators alternately blink about every approx. 3 seconds. After completion of the sequence, the STAND BY indicator alone stays on.*

** Buttons must be pressed within 2 seconds of the previous button.*

** When you make a mistake in button operations, return to the beginning of the sequence.*

** To check the lamp time on the menu, press the MENU button and select "Information" with the cursor button ▲ or ▼. The lamp use time is indicated in the item "Lamp time".*

Video main menu

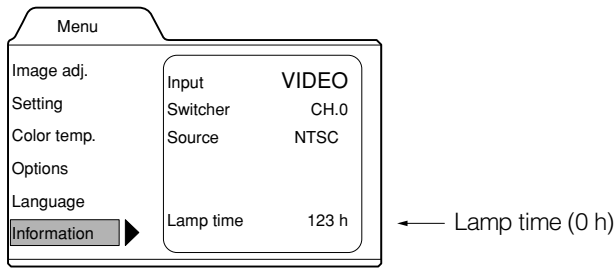

PC main menu

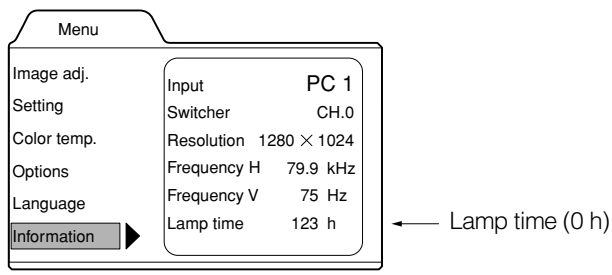

CAUTION

- Reset the lamp use time only when you have replaced with a new light-source lamp. Never reset it during lamp life, otherwise the replacement time may become unclear, and lead to degraded performance or lamp explosion.

Cleaning and Replacing the Filter Cover

Clean the filter regularly. If the filter is heavily stained and does not clean, or if it is damaged, replace the filter with a new filter. Otherwise, dirt may get inside and appear on the screen, preventing you from fully enjoying the video image. If dirt gets inside or if you need information about the filter, consult authorized dealer where you purchased the projector or the nearest Service Center.

1 Turn off the MAIN POWER switch.

After the projector goes into stand-by state with the STAND BY indicator on, turn off the MAIN POWER switch and pull out the power cord from the projector and the wall outlet.

2 Remove the filter.

Loosen the screw with a flat-end screwdriver.

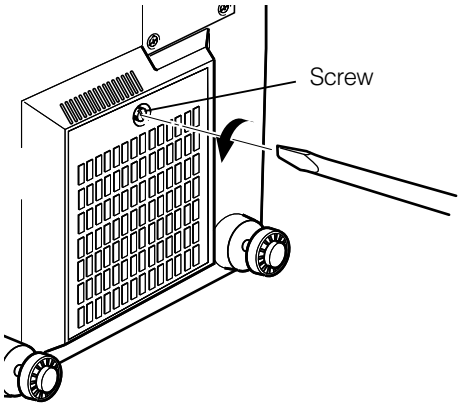

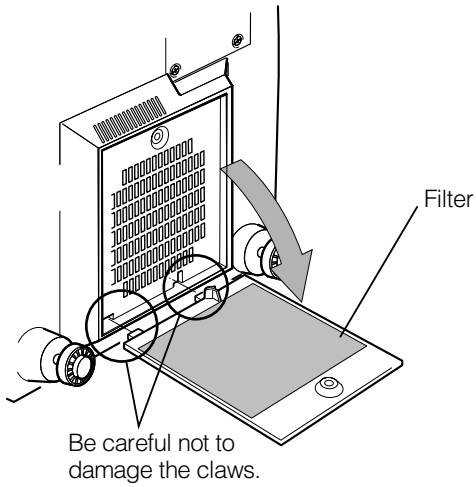

Notes

- The screw is fitted so that it does not come off the filter.
- If the filter is clogged with dirt, etc., the projector goes into an warning state (the OPERATE and STAND BY indicator blink. etc.). Therefore regularly, clean the filter. For the warning indication, refer to page 67.

3 Clean the filter.

Clean the filter with a neutral detergent, wash it in water, and then dry it in the shade.

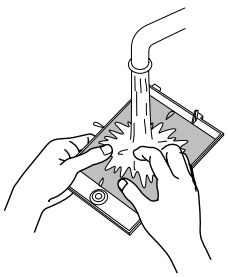

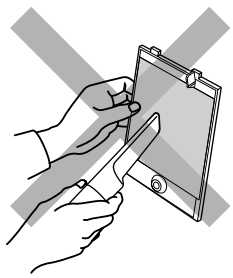

CAUTIONS

- Put on rubber gloves when using neutral detergent.
- After you have washed the filter in water, make sure the filter is completely dry before reinstalling it, otherwise an electric shock or malfunction could occur.
- Do not clean the filter using a vacuum cleaner. Since the filter is soft, it may be sucked into the vacuum cleaner or damaged.

4 Reinstall the filter.

Fasten the screw with a flat-end screwdriver.

Notes

- Install the filter correctly. Otherwise, the projector does not operate. (Goes into an warning state (For the warning indication, Refer to page 66).)
- If the filter's claws (in particular the claw which is hidden behind the filter cover knob) are damaged, the projector may not operate. Then, replace with a new filter.

ENGLISH

Troubleshooting

Solutions to common problems related to your projector are described here. If none of the solutions presented here solves the problem, unplug the projector and consult an authorized dealer or Service Center.

Symptom	Probable cause	Corrective action	Page
Power is not supplied.	• Is the power cord disconnected?	• Insert the power cord (plug) firmly.	30
	• Is the MAIN POWER switch turned on?	• Turn on the MAIN POWER switch.	32
	• Is the fuse blown?	• Turn off the MAIN POWER switch and check the fuse. If it is blown, replace it	57
	• Is the lamp-replacement opening cover closed correctly?	• Turn off the MAIN POWER switch, close the lamp-replacement opening cover correctly, and turn on the MAIN POWER switch again.	7, 32, 60
	• Is the filter closed correctly?	• Turn off the MAIN POWER switch, fit the filter correctly, and turn on the MAIN POWER switch again.	7, 32, 63
	• Has the lamp life expired? (Has the lamp use time reached 1000 hours in the normal mode?) (Has the lamp use time reached 2000 hours in the LPC or LOC mode?)	• Turn off the MAIN POWER switch, replace with a new light-source lamp, and turn on the MAIN POWER switch. Reset the lamp use time after replacing with a new lamp.	32, 58, 59, 62
Light is not emitted, or light level is low.	• Is the lens cap removed?	• Remove the lens cap.	30
	• Is the lamp life near its end?	• Check the lamp use time on the menu, and if the lamp life is near its end, arrange for a replacement lamp, or replace a little earlier.	56, 58, 59
With power on, operation starts but stops in a few minutes.	• Is the air intake or exhaust area blocked?	• Turn off the MAIN POWER switch, remove any blocking objects, and turn on the MAIN POWER switch again.	6, 7, 32
Video image does not appear.	• Is the correct input selected?	• Select the correct input with the VIDEO and PC buttons.	9, 13
	• Are devices connected correctly?	• Connect devices correctly.	11, 22
	• Are signals being supplied from the connected devices?	• Set connected devices correctly.	–
	• Are input signals (scanning frequency, etc.) appropriate?	• Check if the signal is appropriate (scanning frequency, etc.) and input the appropriate signal.	22, 23
	• Is the correct color system selected?	• Set the color system to AUTO or to the correct dedicated color system.	45
	• Is brightness adjusted correctly?	• Adjust brightness on the menu.	49
	• Is video turned off by pressing the HIDE button?	• Press the HIDE button to turn video on.	10, 12, 35
	• During DVI input, are image signals output from the computer graphic board (DVI output terminal)? (During DVI input, depending on the computer settings, there may be no signal input or an error may occur (blue screen).)	• If this happens, turn off the power to both the projector and the computer, and then turn the projector back on before turning the computer on again. Then correctly set the computer's graphic board.	22
Video image dims.	• Is focus adjusted correctly?	• Adjust focus.	12, 34
	• Is distance too short or too long?	• Set the projector at the correct distance.	18, 76, 77
	• Are Tracking and Phase adjusted correctly?	• If satisfactory results are not obtained by pressing the QUICK ALIGN. button to conduct quick alignment, adjust Tracking and Phase on the menu.	13, 36, 47
Video image is abnormally dark or bright.	• Is picture quality (Brightness, etc.) adjusted correctly?	• Adjust picture quality on the menu.	49
Video image freezes.	• Was the FREEZE button on the remote control pressed?	• Press the FREEZE button to release freezing.	12, 37

Symptom	Probable cause	Corrective action	Page
A part of image is magnified.	• Was the DIGITAL ZOOM T button on the remote control pressed?	• Press the PRESET button to restore the original video screen.	12, 37
Color is poor or unstable.	• Is picture quality (color density, etc.) adjusted correctly?	• Adjust picture quality on the menu.	49
	• Is the correct color system selected?	• Set the color system to AUTO or to the correct dedicated color system.	45
	• Are signals (scanning frequency, etc.) of the connected devices appropriate?	• Check if the signal is appropriate (scanning frequency, etc.), and input the appropriate signal.	22
The upper part of the video image bows or distorts.	• While computer system signal is input, isn't a sync signal for composite sync (Cs) or G on sync being input?	• Input separate sync signals for vertical sync (V) and horizontal sync (H) signals.	11, 28
	• Isn't signal with much jitter or skew distortion being input from a video deck?	• Input signals with little jitter or distortion. Use a TBC or a device with a built-in TBC.	–
Video image suddenly go out.	• Is video picture turned off by pressing the HIDE button?	• Turn on video picture by pressing the HIDE button.	10, 12, 35
Remote control unit does not work.	• Are batteries installed correctly?	• Match the polarities of batteries correctly (+ to + and – to –).	14
	• Are batteries exhausted?	• Replace with new batteries.	14
	• Is there a shielding object between the remote control unit and the remote sensor?	• Remove any shielding objects.	20
	• Is the distance too long?	• Use the remote control unit at a nearer point.	20
	• Is either side of remote cable disconnected?	• Firmly insert the remote cable when using the remote control unit as the wired one.	21

** This device uses a computer. External noise may cause it to malfunction. If this happens, turn the power off, remove the electric plug from the wall outlet. Then insert the electric plug back into the wall outlet, turn the power back on and check the operation.*

■ When warning indication is shown by the blinking indicators:

The warning status will be notified by the combination lighting of the projector's indicators.
For the warning contents and the action to be taken, refer to "Warning Indication" on page 66.

■ Maintenance

- Stains on the cabinet
  These should be wiped off with a soft cloth. If the cabinet is heavily stained, wipe it with a cloth soaked in water-diluted neutral detergent and wring well, then wipe clean with a dry cloth.
- Since the cabinet may deteriorate in quality, become damaged, or show paint peeled, note the following:
  – Do not wipe with rough cloth.
  – Do not wipe vigorously.
  – Do not wipe with thinner or benzene.
  – Do not apply any volatile substance such as insecticides.
  – Do not allow any rubber or vinyl article to remain in contact with the cabinet for a long time.
- Stains on the lens
  These should be cleaned off with commercially available lens blowers or lens cleaning paper (for cleaning glasses and cameras).
  Do not use liquid cleaning agents. This could cause the surface coating to be removed.
  Do not rub, scratch or hit the lens as its surface is prone to damage.

Warning Indication

If something abnormal has occurred with the projector, the warning status will be indicated by the combination of lighting the indicators on the control panel as shown in the following table. Then, the projector automatically stops projection and runs the cooling fan for about 120 seconds.

Warning indication table:

No.	Indicator				Warning content
	LAMP	TEMP	STAND BY	OPERATE	
1	Blink		Blink		The light-source lamp does not light and projection is not made.
2	Blink			Blink	The light-source lamp has suddenly gone off during projecting an image.
3	Blink	Blink			Circuit operation is abnormal.
4			Blink	Blink	The filter is displaced.
5		Blink			The internal temperature is too high. (Sensor 1)
6		Blink	Blink		The internal temperature is too high. (Sensor 2)
7	Blink	Blink	Blink	Blink	The cooling fan has stopped (locked).

** For individual indicator lighting, refer to page 58.*

■ Action to be taken for warning indication

Stopping the projector:

After the cooling fan has stopped, take the following action.

No. 1 : Check that the cover for replacing the light-source lamp and the front panel are securely attached, and then, press the OPERATE button for one second or more to turn on the projector for retrying.
No. 2 : Check that the cover for replacing the light-source lamp and the front panel are securely attached, and then, press the OPERATE button for one second or more to turn on the projector for retrying.
No. 3 : Press the OPERATE button for one second or more to turn on the projector for retrying.

Nos. 4-7 : Follow the next steps.

1. Turn off the MAIN POWER switch and unplug the power cord from the wall outlet.
2. Take an action according to the number.
   No. 4 : Set the filter in place.Then, leave the projector until it cools down.
   No. 5 : Check that nothing is blocking the air inlet nor outlet, and wait until the inside cools down.
   No. 6 : Check that nothing is blocking the air inlet nor outlet, and wait until the inside cools down.
   No. 7 : Leave the projector until it cools down.
3. Plug in the power cord again, turn on the MAIN POWER switch, and press the OPERATE button for one second or more to turn on the projector for retrying.

Retrying operation:

Plug in the power cord again and operate the projector.
If the same warning indication is observed again, after the cooling fan has stopped, turn off the MAIN POWER switch, unplug the power cord, and call your dealer for repair.

Warning Messages

The following shows the warning messages that can be displayed on the screen. When a warning message is displayed, take the corrective action described here.

Message	Cause	Corrective action	Page
PC 1 No Input	• No device is connected to the input terminal. • The terminal is connected but no signal is output from the connected device. * *The selected input mode (input terminal) name is shown in the first line of the massage.*	• Connect a device to the selected terminal. • Operate the connected device and output a signal.	9, 11, 24 ~ 29, 33
PC 1 Frequency of input signal is out of range.	• The frequency of the input video signal is out of range. • The selected input mode (input terminal) name is shown in the first line of the message.	• Input the video signals whose frequency is within the projector's specifications.	22, 23, 70
PC 1 Signal is not supported.	• Though the frequency of the input video signal is within the acceptable range, other items such as resolution are out of the projector's specifications. • The selected input mode (input terminal) name is shown in the first line of the message.	• Input the video signals that satisfies the projector's specifications.	22, 23, 70
FREEZE	• When the FREEZE button is pressed, this message appears for a few seconds. • When a button not acceptable is pressed during freezing, this message appears for a few seconds to notify that the image is being frozen.	• To release freezing, press the FREEZE button on the remote control.	12, 37
FREEZE	• When the FREEZE button is pressed for the video signals that cannot be frozen (UXGA 60Hz, SXGA 60Hz.), this message appears for a few seconds to notify that the image cannot be frozen. * *To forcibly clear the message, press the EXIT button.*	• Freeze function does not work for the inputted video signals. To use this function, input the video signals that can be frozen.	12, 37

ENGLISH

Message	Cause	Corrective action	Page
D.ZOOM	• When the DIGITAL ZOOM button is pressed for the video signals that cannot be zoomed (UXGA 60Hz, SXGA 60Hz.), this message appears for a few seconds to notify that the image cannot be digitally zoomed. * *To forcibly clear the message, press the EXIT button.*	• Digital-zoom function does not work for the inputted video signals. To use the this function, input the video signals that can be digitally zoomed.	13, 37
Lamp replacement EXIT	Displayed when the lamp control setting is set to NORMAL MODE • Appears every time the projector is turned on after the lamp use time has exceeded 900 hours and until it reaches 1000 hours. * *The message is cleared by pressing any button.*	• Arrange for a new lamp (lamp unit) or replace the lamp early.	44, 46
Warning Lamp replacement EXIT	Displayed when the lamp control setting is set to NORMAL MODE • When the lamp use time reaches 1000 hours, the word “Warning” blinks on the screen. * *To cancel this message, press the EXIT button.* *However, the same message will appear every hour.* * *If the power is turned off after the lamp use time has exceeded 1000 hours, the power can not be turned on again.* * *When the lamp use time reaches 1010 hours, the projector is forcibly turned off and can not be turned back on again.*	• Replace with a new lamp (lamp unit) and reset the lamp time.	44, 46

Message	Cause	Corrective action	Page
1000 h Lamp replacement EXIT	Displayed when the lamp control setting is set to LIGHT OUTPUT CONTROL MODE (LOC) or LIGHT POWER CONTROL MODE (LPC) and the lamp use time display is turned [ON] with the OSD menu • Displayed when the lamp use time exceeds 1000 hours. * *The message does not appear if the lamp use time display is turned [OFF] with the OSD menu.*	• Arrange for a new lamp (lamp unit) or replace the lamp early.	44, 46
Lamp replacement EXIT	Displayed when the lamp control setting is set to LIGHT OUTPUT CONTROL MODE (LOC) or LIGHT POWER CONTROL MODE (LPC) • Appears every time the projector is turned on after the lamp use time has exceeded 1900 hours and until it reaches 2000 hours. * *The message is cleared by pressing any button.*	• Arrange for a new lamp (lamp unit) or replace the lamp early.	44, 46
Warning Lamp replacement EXIT	Displayed when the lamp control setting is set to LIGHT OUTPUT CONTROL MODE (LOC) or LIGHT POWER CONTROL MODE (LPC) • When the lamp use time reaches 2000 hours, the word “Warning” blinks on the screen. * *To cancel this message, press the EXIT button. However, the same message will appear every hour.* * *If the power is turned off after the lamp use time has exceeded 2000 hours, the power can not be turned on again.* * *When the lamp use time reaches 2010 hours, the projector is forcibly turned off and can not be turned back on again.*	• Replace with a new lamp (lamp unit) and reset the lamp use time.	44, 46

Memo

The message display language corresponds to the menu display language setting. This is set to “English (English)” when the projector is bought. The display language can be selected from 6 languages. (Refer to page 46.) However, the input mode (PC1, PC2, DVI, Y/C, VIDEO, COMP) and button indications (FREEZE, D.ZOOM, EXIT) are only displayed in English irrespective of the display language setting.
The language settings in the section are explained in “English”.

ENGLISH

Specifications

■ Optical mechanism system

- Projection method: D-ILA® (Direct Drive Image Light Amplifier) method (Reflective-type active-matrix method)
- D-ILA® device: 0.9" (2.3 cm) measured diagonally (1365 pixels × 1024 pixels) × 3 (Total number of pixels : 4,193,280)
- Projecting lens:
  GL-M2910G: 1:1
  GL-M2915SG: 1.5:1 (with ±2% zooming/shift function)
  GL-M2920ZG: × 1.5 zoom lens (2:1 to 3:1) (zooming function)
  GL-M2930SZG: × 1.9 zoom lens (2.9 to 5.5:1) (zooming/shift function)
- Screen size:
  GL-M2910G: Refer to page 76.
  GL-M2915SG: Refer to page 76.
  GL-M2920ZG: Refer to page 77.
  GL-M2930SZG: Refer to page 77.
- Projection distance:
  GL-M2910G: Refer to page 76.
  GL-M2915SG: Refer to page 76.
  GL-M2920ZG: Refer to page 77.
  GL-M2930SZG: Refer to page 77.
- Light-source lamp: 420 W xenon lamp

■ Electrical system

- Color system: NTSC, NTSC4.43, PAL, SECAM (Automatic switching / manual switching)
- Resolution: 1365 dots × 1024 dots (S-XGA full resolution, during RGB input)
  1000 TV lines (Horizontal resolution, aspect ratio 4 : 3, during video input)
- Scanning frequency: Horizontal frequency : 15 kHz ~ 105 kHz
  Vertical frequency : 50 Hz ~ 100 Hz
- Audio power output: 1 W (monaural), 1-5/8" (4 cm) round type micro-speaker × 1

■ Input terminals

[AV IN]

- Y/C: 1-line, mini-DIN 4 pin × 1 (for S-video)
- VIDEO: 1-line, BNC × 1 (for composite video)
  1-line, BNC × 3 (for computer, DTV or video)
- Y, B-Y, R-Y: Component (Y, B-Y, R-Y) signal
- Y, P_B, P_R: DTV-format (Y, P_B, P_R) signal

[PC 1]

- R, G, B, H, V: 1-line, D-sub 3-row 15 pin × 1 (for computer)

[PC 2]

1-line, BNC × 5 (for computer, DTV or video)

- R, B, G: Analog RGB signal
- H/C_S, V: Horizontal (H) sync/composite (C_S) sync, Vertical (V) sync signal

[DVI] 1-line, DVI-D 24-pin × 1

[CONTROL]

- RS-232C: 1-line, D-sub 9-pin × 1
  ** RS-232C-interface specified control terminal for controlling this projector with a personal computer.*
- REMOTE: 1-line, stereo mini-jack × 1
  ** Remote terminal for connecting with the remote control unit.*

■ Output terminal

- PC OUT: 1-line, D-sub 3-row 15-pin × 1 (output for display monitor)
- CONTROL OUT: 1-line, D-sub 9-pin × 1
  ** RS-232C-interface specified control terminal for controlling this projector with a personal computer.*

■ General

- Power requirements: 120 V AC, 50/60 Hz
- Power consumption: 7 A
- Allowable operation temperature: 41°F to 95°F (+ 5°C to + 35°C)
- Allowable relative humidity: 20% to 80% (no condensation)
- Allowable storage temperature: 14°F to 140°F (– 10°C to + 60°C)
- Dimensions: Approx. 20" × 10-1/2" × 15-1/2" (Approx. 505 mm × 265 mm × 393 mm)
  [Carrying band, Excluding protrusions]
  (Width × Height × Depth)
- Weight: Approx. 32.12 lbs. (Approx. 14.6 kg)
- Accessories: (Refer to page 5.)

** Design and specifications are subject to change without notice.*
** D-ILA devices are manufactured with a very high-precision technology, allowing 99.99% of the pixels to be effective. Only 0.01% or less of the pixels are missing or always on.*
** For easy understanding, pictures and illustrations maybe emphasized, composed or have omissions and may be more or less different from actual products.*
** TRADEMARKS*
D-ILA is a trademark of Victor Company of Japan, Limited.
IBM and IBM PC are registered trademarks of International Business Machines Corporation. Macintosh is a registered trademarks of Apple Computer, Inc.
VESA is a trademark of the non-profit organization Video Electronics Standards Association.
All other product names mentioned herein are used for identification purposes only, and may be the trademarks or registered trademarks of their respective companies.

Outside dimensions

■ Top

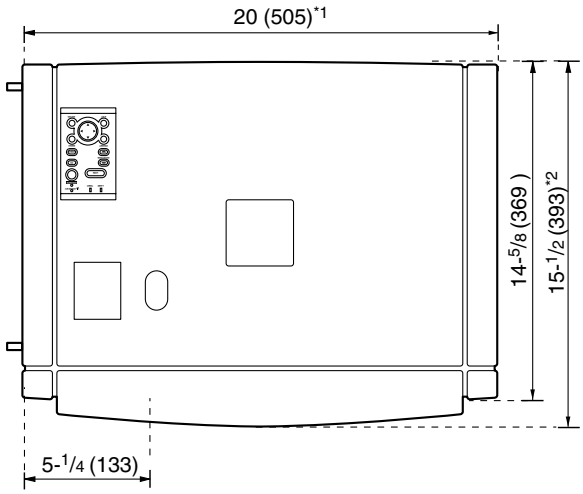

Unit: inch (mm)

*1: Protrusion excluded
*2: Lens excluded

■ Front

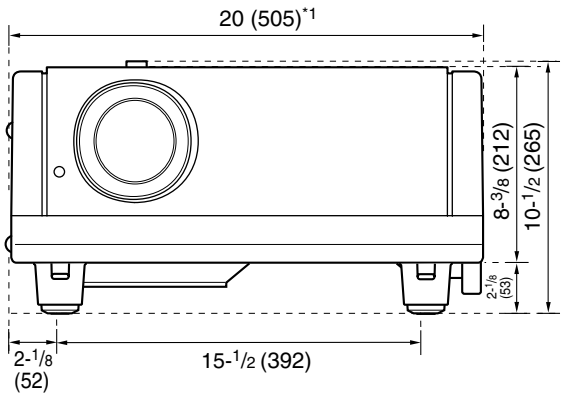

■ Side

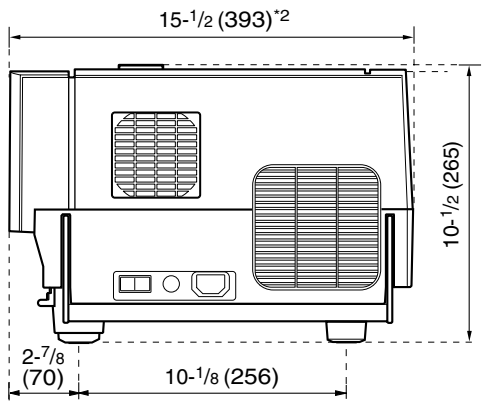

Pin assignment (Specifications for terminals)

■ Y/C terminal

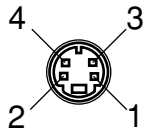

Pin number	Signal name
1	GND (Y)
2	GND (C)
3	Y
4	C

■ RS-232C terminal

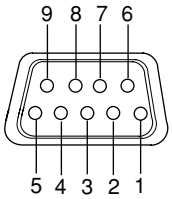

Pin number	Signal name	Pin number	Signal name
1	N/C	6	N/C
2	RD	7	N/C
3	TD	8	N/C
4	N/C	9	N/C
5	GND		

■ PC1 terminal/PC OUT terminal

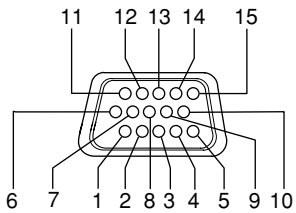

Pin number	Signal name	Pin number	Signal name
1	Red	9	N/C
2	Green	10	GND (SYNC)
3	Blue	11	GND
4	N/C	12	N/C
5	N/C	13	H.SYNC
6	GND (Red)	14	V.SYNC
7	GND (Green)	15	N/C
8	GND (Blue)		

■ DVI terminal

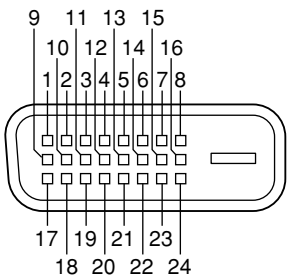

Pin number	Signal name	Pin number	Signal name	Pin number	Signal name
1	T.M.D.S.Data2-	9	T.M.D.S.Data1-	17	T.M.D.S.Data0-
2	T.M.D.S.Data2+	10	T.M.D.S.Data1+	18	T.M.D.S.Data0+
3	T.M.D.S.Data2 Shield	11	T.M.D.S.Data1 Shield	19	T.M.D.S.Data0 Shield
4	No Connect	12	No Connect	20	No Connect
5	No Connect	13	No Connect	21	No Connect
6	DDC Clock	14	+5V Power	22	T.M.D.S. Clock Shield
7	DDC Data	15	Ground (for +5 V)	23	T.M.D.S. Clock +
8	No Connect	16	Hot Plug Detect	24	T.M.D.S. Clock -

ENGLISH

RS-232C external control

By connecting a computer to the RS-232C terminal, you can control the projector. Use a reverse connection cable as the RS-232C connection cable.
The commands to control the projector and the response data against the received commands are explained here.
For further information, please consult the dealer where you purchased your projector or consult the Service Center.

1. Communication Specifications

The communication specifications are as follows:

Baud rate	9600bps / 19200bps*
Data length	8 bits
Parity	None
Stop bit	1 bit
Flow control	None

** Factory set value. To change the value, refer to "Setting and Adjusting Other Functions (OPTIONS)" on page 54.*

2. Command Format

2-1. Command data format (from the computer to the projector)

When sending a control command, use the following data format.

Header | ID | SP | Command [SP | Parameter] | CR

Header: Designates the head of data and the kind of data.
"!" (21h): Control command to the projector
"?" (3Fh): Query to the projector (Asking command)
ID: "1" (fixed)
SP: Designates the delimiter for ID, Command, and Parameter. (20h)
CR: Designates the terminal of the data. (0Dh)
** [ ] is not necessary when Asking command.*

2-2. Response data format (from the projector to the computer)

Upon executing the received control command, the projector sends back the following response data to the computer.

Header | ID | SP | Normal Termination Status | SP | Parameter | CR

Header: Designates the head of data.
"@" (40h): Fetches data from the projector.
ID: "1" (fixed)
SP: Designates the delimiter for ID, Command, and Parameter (20h)
Normal Termination Status: "0" (30h)
CR: Designates the terminal of the data (0Dh)

2-3 Parameters used for the data format

The following three kinds of parameters are prepared for the control command and response data.

(1) Numeric value

Designates the 2-byte hexadecimal value with the sign as the 4-digit (byte) characters.
Designation allowable range: “8000” to “7FFF”

(2) ON/OFF

Designates the status (ON/OFF) of the projector, such as POWER and HIDE.

Character	Hex.	Meaning
“0”	30	OFF
“1”	31	ON

(3) Special parameters

Input switching parameters:

Character	Hex.	Meaning
“0”	30	Y/C
“1”	31	VIDEO
“2”	32	COMP
“3”	33	PC1
“4”	34	PC2
“5”	35	DVI

Operation mode parameters:

Character	Hex.	Meaning
“0000”	30h, 30h, 30h, 30h	Stand-by mode
“0001”	30h, 30h, 30h, 31h	Power-on mode
“0002”	30h, 30h, 30h, 32h	Cool-down mode
“0004”	30h, 30h, 30h, 34h	Warning mode

3. Control command table

The control commands that can be sent from the computer are as follows:

Function	Command	Asking		Kind of data		
		Power ON	ELSE	Numeric Value	ON/OFF	Special Data
OPERATE	U0F	–	–	–	✓	–
HIDE	U00	✓	–	–	✓	–
Right Left rev.	U17	✓	–	–	✓	–
Top Bottom inv.	U18	✓	–	–	✓	–
Keystone	U40	✓	–	✓	–	–
Input	U1A	✓	–	–	–	Y/C, VIDEO, PC1, PC2, COMP, DVI
Operation mode	Z03	✓	✓	–	–	Stand-by, Power-on, Cool-down, Warning

** Keystone: Numeric value can range from “FF80” to “0080”*
** Operation mode: Only Asking command is possible*

ENGLISH

Appendix

■ Relationship between Projection Distances and Projection Screen Sizes

Notes

- The relationship between the projection distances and projection screen sizes differs depending on the lens unit (optional) you are using.
- The projection distance and projection screen sizes listed here are only for a guide. Use them as reference when setting the projector.

For lens unit GL-M2910G (1:1):

Projection screen size (Diagonal length)	Approximate projection distance unit: ft (m)	
	For 4:3 aspect-ratio screens	For 16:9 aspect-ration screens
36.7" (approx. 93.2 cm)	---	2.53 (0.77)
40" (approx. 101.6 cm)	2.53 (0.77)	2.76 (0.84)
50" (approx. 127.0 cm)	3.18 (0.97)	3.48 (1.06)
60" (approx. 152.4 cm)	3.84 (1.17)	4.20 (1.28)
70" (approx. 177.8 cm)	4.53 (1.38)	4.95 (1.51)
80" (approx. 203.2 cm)	5.18 (1.58)	5.68 (1.73)
90" (approx. 228.6 cm)	5.87 (1.79)	6.40 (1.95)
100" (approx. 254.0 cm)	6.53 (1.99)	7.12 (2.17)
110" (approx. 279.4 cm)	7.22 (2.20)	7.87 (2.40)
120" (approx. 304.8 cm)	7.87 (2.40)	8.60 (2.62)
130" (approx. 330.2 cm)	8.53 (2.60)	9.32 (2.84)
140" (approx. 355.6 cm)	9.22 (2.81)	10.04 (3.06)
150" (approx. 381.0 cm)	9.88 (3.01)	10.79 (3.29)
160" (approx. 406.4 cm)	10.56 (3.22)	11.52 (3.51)
170" (approx. 431.8 cm)	11.22 (3.42)	12.24 (3.73)
180" (approx. 457.2 cm)	11.88 (3.62)	12.96 (3.95)
190" (approx. 482.6 cm)	12.57 (3.83)	13.68 (4.17)
200" (approx. 508.0 cm)	13.22 (4.03)	---

For lens unit GL-M2915SG (1.5:1):

Projection screen size (Diagonal length)	Approximate projection distance unit: ft (m)	
	For 4:3 aspect-ratio screens	For 16:9 aspect-ration screens
55" (approx. 139.7 cm)	---	6.00 (1.83)
60" (approx. 152.4 cm)	5.77 (1.76)	6.30 (1.92)
65" (approx. 165.1 cm)	6.27 (1.91)	6.82 (2.08)
70" (approx. 177.8 cm)	6.76 (2.06)	7.38 (2.25)
75" (approx. 190.5 cm)	7.28 (2.22)	7.91 (2.41)
80" (approx. 203.2 cm)	7.78 (2.37)	8.46 (2.58)
85" (approx. 215.9 cm)	8.27 (2.52)	9.02 (2.75)
90" (approx. 228.6 cm)	8.76 (2.67)	9.55 (2.91)
95" (approx. 241.3 cm)	9.28 (2.83)	10.10 (3.08)
100" (approx. 254.0 cm)	9.78 (2.98)	10.63 (3.24)
105" (approx. 266.7 cm)	10.27 (3.13)	11.19 (3.41)
110" (approx. 279.4 cm)	10.76 (3.28)	11.75 (3.58)
115" (approx. 292.1 cm)	11.25 (3.43)	12.27 (3.74)
120" (approx. 304.8 cm)	11.78 (3.59)	12.83 (3.91)
125" (approx. 317.5 cm)	12.27 (3.74)	13.35 (4.07)
130" (approx. 330.2 cm)	12.76 (3.89)	13.91 (4.24)
135" (approx. 342.9 cm)	13.25 (4.04)	14.44 (4.40)
140" (approx. 355.6 cm)	13.75 (4.19)	---
145" (approx. 368.3 cm)	14.27 (4.35)	---
150" (approx. 381.0 cm)	14.76 (4.50)	---

For lens unit GL-M2920ZG (2 to 3:1):

Projection screen size (Diagonal length)	Approximate projection distance unit: ft (m)			
	For 4:3 aspect-ratio screens		For 16:9 aspect-ration screens	
	Wide end	Tele end	Wide end	Tele end
40" (approx. 101.6 cm)	---------	---------	---------	8.53 (2.60)
42" (approx. 106.7 cm)	---------	8.23 (2.51)	---------	9.96 (2.73)
50" (approx. 127.0 cm)	---------	9.74 (2.97)	---------	10.60 (3.23)
60" (approx. 152.4 cm)	---------	11.65 (3.55)	8.50 (2.59)	12.66 (3.86)
70" (approx. 177.8 cm)	9.09 (2.77)	13.55 (4.13)	9.84 (3.00)	14.73 (4.49)
80" (approx. 203.2 cm)	10.33 (3.15)	15.42 (4.70)	11.22 (3.42)	16.80 (5.12)
100" (approx. 254.0 cm)	12.83 (3.91)	19.23 (5.86)	13.94 (4.25)	20.90 (6.37)
150" (approx. 381.0 cm)	19.09 (5.82)	28.71 (8.75)	20.77 (6.33)	31.23 (9.52)
200" (approx. 508.0 cm)	25.33 (7.72)	38.16 (11.63)	27.59 (8.41)	41.54 (12.66)
240" (approx. 609.6 cm)	30.35 (9.25)	45.73 (13.94)	33.04 (10.07)	49.80 (15.18)
250" (approx. 635.0 cm)	31.59 (9.63)	47.64 (14.52)	34.38 (10.48)	51.87 (15.81)
300" (approx. 762.0 cm)	37.86 (11.54)	57.09 (17.40)	41.21 (12.56)	62.17 (18.95)
310" (approx. 787.4 cm)	39.11 (11.92)	58.99 (17.98)	42.59 (12.98)	64.24 (19.58)
320" (approx. 812.8 cm)	40.35 (12.30)	60.89 (18.56)	43.93 (13.39)	---------
330" (approx. 838.2 cm)	41.60 (12.68)	62.76 (19.13)	45.31 (13.81)	---------
340" (approx. 863.6 cm)	42.85 (13.06)	64.67 (19.71)	46.65 (14.22)	---------
350" (approx. 889.0 cm)	44.09 (13.44)	---------	48.03 (14.64)	---------
400" (approx. 1016.0 cm)	50.36 (15.35)	---------	54.86 (16.72)	---------
450" (approx. 1143.0 cm)	56.63 (17.26)	---------	61.65 (18.79)	---------
470" (approx. 1193.8 cm)	59.12 (18.02)	---------	64.37 (19.62)	---------
480" (approx. 1219.2 cm)	60.37 (18.40)	---------	---------	---------
500" (approx. 1270.0 cm)	62.89 (19.17)	---------	---------	---------
521" (approx. 1323.3 cm)	65.52 (19.97)	---------	---------	---------

For lens unit GL-M2930SZG (2.9 to 5.5:1):

Projection screen size (Diagonal length)	Approximate projection distance unit: ft(m)			
	For 4:3 aspect-ratio screens		For 16:9 aspect-ration screens	
	Wide end	Tele end	Wide end	Tele end
40" (approx. 101.6 cm)	---------	14.83 (4.52)	---------	16.11 (4.91)
50" (approx. 127.0 cm)	---------	18.44 (5.62)	---------	20.05 (6.11)
60" (approx. 152.4 cm)	---------	22.05 (6.72)	---------	23.98 (7.31)
70" (approx. 177.8 cm)	---------	25.66 (7.82)	14.83 (4.52)	27.92 (8.51)
80" (approx. 203.2 cm)	15.55 (4.74)	29.30 (8.93)	16.93 (5.16)	31.86 (9.71)
100" (approx. 254.0 cm)	19.36 (5.90)	36.52 (11.13)	21.06 (6.42)	39.76 (12.12)
150" (approx. 381.0 cm)	28.87 (8.80)	54.59 (16.64)	31.43 (9.58)	59.45 (18.12)
200" (approx. 508.0 cm)	38.39 (11.70)	72.67 (22.15)	41.77 (12.73)	79.17 (24.13)
240" (approx. 609.6 cm)	45.96 (14.01)	87.14 (26.56)	50.07 (15.26)	94.91 (28.93)
250" (approx. 635.0 cm)	47.86 (14.59)	90.78 (27.67)	52.13 (15.89)	---------
260" (approx. 660.4 cm)	49.77 (15.17)	94.39 (28.77)	54.20 (16.52)	---------
270" (approx. 685.8 cm)	51.67 (15.75)	97.99 (29.87)	56.27 (17.15)	---------
280" (approx. 711.2 cm)	53.58 (16.33)	---------	58.33 (17.78)	---------
300" (approx. 762.0 cm)	57.38 (17.49)	---------	62.50 (19.05)	---------
350" (approx. 889.0 cm)	66.90 (20.39)	---------	72.83 (22.20)	---------
400" (approx. 1016.0 cm)	76.41 (23.29)	---------	83.20 (25.36)	---------
470" (approx. 1193.8 cm)	89.70 (27.34)	---------	97.70 (29.78)	---------
480" (approx. 1219.2 cm)	91.60 (27.92)	---------	---------	---------
500" (approx. 1270.0 cm)	95.41 (29.08)	---------	---------	---------
510" (approx. 1295.4 cm)	97.31 (29.66)	---------	---------	---------