myprojectorlamps.com

The most trusted, dependable name in projector lamp sales.

http://www.myprojectorlamps.com

http://www.myprojectorlamps.ca

http://www.myprojectorlamps.eu

The following projector manual has not been modified or altered in any way.

TABLE OF CONTENTS

Safety Instructions **iii**

Introduction **1**
Image Resolution 1
Compatibility 2
Unpacking the Projector 2
Usage Guidelines 5
If You Need Assistance 5
Warranty 6

Setting up the Projector **7**
Connecting the CableWizard™3 to the Projector 8
Preparing to Connect Your Equipment to the Projector 9
Connecting a Laptop Computer 10
Connecting a Desktop Computer 12
Connecting a Video Player 14
Powering up the Projector and Adjusting the Image 16
Turning Off the Projector 17

Using the Projector **19**
Basic Image Adjustment 19
Using the Remote Control 19
Adjusting the Projector 21
Using the Keypad and Remote Buttons 22
Using the On-Screen Menus 24
Display Menu 25
Audio Menu 27
Image Menu 28
Controls Menu 30
Language Menu *32*
Status Menu 33

Maintenance & Troubleshooting **35**
Cleaning the Lens 35
Replacing the Projection Lamp 35
Replacing the Batteries in the Remote Control 38
Using the Kensington Lock 39
Troubleshooting 40

Appendix **45**
Specifications 45
Accessories 47
Portable and Laptop Activation Chart 49
Using Video Mirroring with a PowerBook Computer 54
Projected Image Size 55

Index **57**

SAFETY INSTRUCTIONS

Please read and follow all safety instructions provided BEFORE using your new projector. Failure to comply with safety instructions may result in fire, electrical shock, or personal injury and may damage or impair protection provided by equipment. Please save all safety instructions.

Safety Definitions:

- **Warning:** Statements identify conditions or practices that could result in permanent personal injury.
- **Caution:** Statements identify conditions or practices that could result in damage to your equipment.

Safety Symbols:

Attention: For information about usage of a feature, please refer to the User's Guide.

Warning: Hot surface. Do not touch.

An arrow pointing to the lamp door on the projector.

Safety Terms:

- **Warning:** Don't look directly into the lens when the projector is turned on.
- **Warning:** Don't block ventilation openings.
- **Warning:** To replace the lamp, turn the power off and unplug the power cord. To avoid burns, wait 30 minutes before opening the lamp door. Follow all instructions provided in this User's Guide.
- **Warning:** Please use the power cord provided. Connect the power cord to a receptacle with a protective safety (earth) ground terminal.
- **Warning:** Refer all service to qualified service personnel. Servicing your own projector will void the warranty. See the following page for the customer service contact information.

- **Caution:** Don't set liquids on the projector. Spilled liquids may damage your projector.
- **Caution:** Don't place the projector on a hot surface or in direct sunlight.
- **Caution:** Do not drop the projector. Transport the projector in an InFocus-approved case; see page 48 for a list of cases.
- **Caution:** For ceiling mount installations, please use the ceiling mount recommended in this User's Guide on page 48 and follow all instructions provided with it.

Customer Service

If you need assistance, call InFocus Customer Service directly at **1-800-799-9911**. Support is free between 6 a.m. and 6 p.m. PST, Monday through Friday. Support is available in North America after hours and weekends for a fee at **1-888-592-6800.**

Or, send us an e-mail at techsupport@infocus.com

In Europe, call InFocus in The Netherlands at **(31) 35-6474010** between 8 a.m. and 6 p.m. Central European Time.

In Asia, call **(65) 332-0659** between 9:30 a.m. and 5:30 p.m.

INTRODUCTION

The InFocus® LP™425z and LP435z lightweight multimedia projectors are specifically designed for the mobile presenter. They generate crisp, clear images using Digital Light Processing™ (DLP) technology. The projectors are easy to connect, easy to use, and easy to maintain. The soft carry case makes it easy to transport the 7.4 pound projectors. The 425z has SVGA 800x600 graphics, the 435z has XGA 1024x768 graphics. The user interfaces of the two products are identical; information in this User's Guide applies to both products.

Image Resolution

LP425z

The SVGA resolution of the 425z's projected image is 800x600. Screen resolutions between 800x600 and 1024x768 are compressed to 800x600. The 425z cannot compress screen resolutions above 1024x768. If your computer's screen resolution is higher than 1024x768, reset it to a lower resolution before you connect the projector.

LP435z

The XGA resolution of the 435z's projected image is 1024x768. The 435z cannot compress screen resolutions above 1024x768. If your computer's screen resolution is higher than 1024x768, reset it to a lower resolution before you connect the projector.

NOTE: *The 425z automatically expands 640x480 images to 800x600. You can display these images at 640x480 by turning off the Auto Resize feature. See "Auto Resize" on page 28.*

NOTE: *The 435z automatically expands 640x480 and 800x600 images to 1024x768. You can display these images at their original resolutions by turning off the Auto Resize feature. See "Auto Resize" on page 28.*

Compatibility

The projector is compatible with a wide variety of computers and video devices, including:

- IBM-compatible computers, including laptops, up to 1024x768 resolution at 75 Hz
- Apple Macintosh and PowerBook computers up to 1024x768 resolution at 75 Hz.
- Most standard VCRs, DVD players, camcorders and laser disc players.

Unpacking the Projector

The projector comes with the items shown in Figure 1. Check to make sure all are included. **Contact your InFocus dealer immediately if anything is missing**.

If you are experienced in setting up presentation systems, use the *Quick Start* card that was included in the shipping box. For complete details on connecting and operating the projector, refer to this User's Guide. User's Guides are also available for download from our website at www.infocus.com.

NOTE: *The contents of your shipping box may vary depending on the projector configuration you've ordered.*

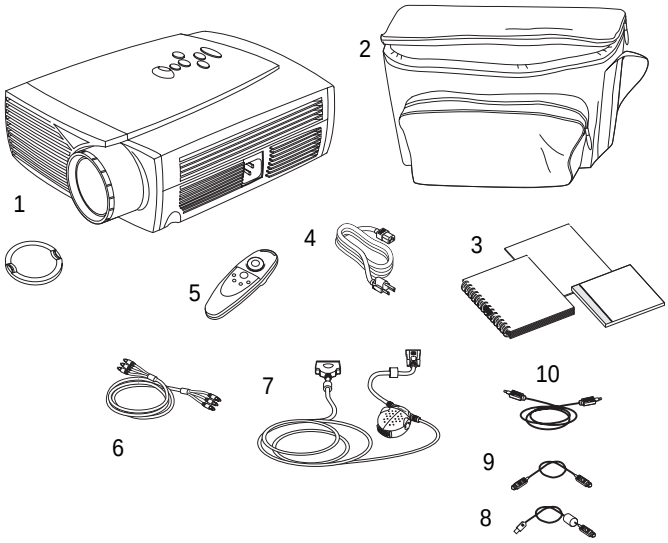

FIGURE 1

Shipping box contents

1. LP425z or 435z projector and lens cap
2. Soft carry case
3. *LP425z/435z User's Guide*, quick start card, and Online User Guide CD
4. Power cord
5. Remote
6. RCA audio/video (A/V) cable
7. CableWizard[3]
8. CableWizard USB mouse cable
9. CableWizard PS/2 mouse cable
10. CableWizard audio cable

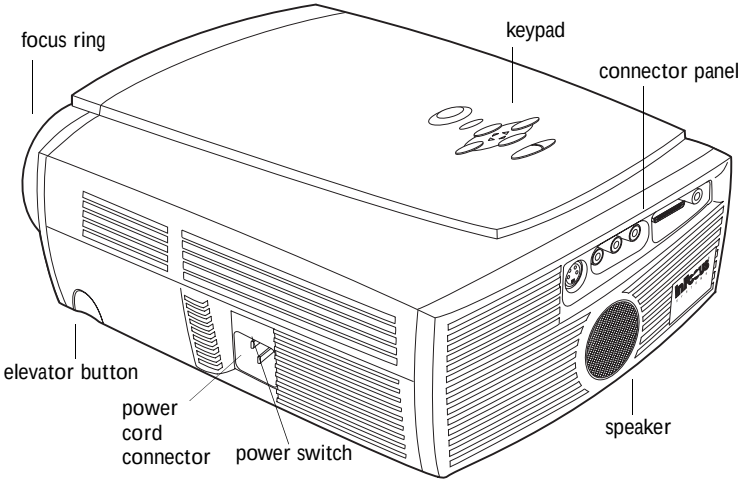

FIGURE 2

Side view of projector

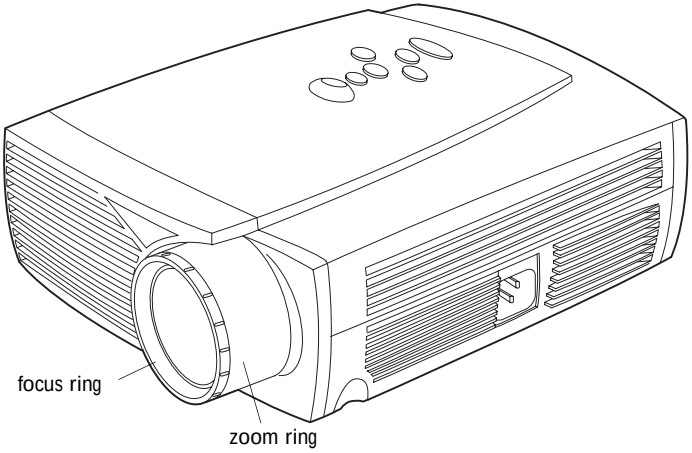

FIGURE 3

Front view of projector

Usage Guidelines

- Do not look directly into the projection lens when the projector is turned on. The bright light may harm your eyes.
- Do not block the grills on the projector. Restricting the air flow can cause it to overheat and turn off. If this happens, you must wait a minute before attempting to turn it back on.
- Handle the projector as you would any product with glass components. Be especially careful not to drop it.
- Avoid leaving the projector in direct sunlight or extreme cold for extended periods of time. If this happens, allow it to reach room temperature before use.
- This projector is not intended for use in mainframe computer rooms as defined in the Standard for the Protection of Electronic Computer / Data Processing Equipment, ANSI / NFPA 75.
- Transport the projector in a vendor-approved hard or soft case. Part numbers for these cases are listed on page 48.

If You Need Assistance

The first place to look for help is in this manual. Be sure to check the guidelines in "Troubleshooting" on page 40. Or, check the Service and Support section of our website at **http://www.infocus.com/service.**

If those sources don't answer your question, call your InFocus dealer. You can also call InFocus Customer Service directly at **1-800-799-9911**. Call between 6 a.m. and 6 p.m. PST, Monday through Friday. Service is available in North America after hours and on weekends for a fee at **1-888-592-6800**.

In Europe, call InFocus in The Netherlands at **(31) 35-6474010** between 8 a.m. and 6 p.m. Central European Time.

In Asia, call **(65) 332-0659** between 9:30 a.m. and 5:30 p.m.

Or, send us an e-mail at **techsupport@infocus.com**

Our World Wide Web address is **http://www.infocus.com**.

Warranty

This product is backed by a limited two-year warranty. The details of the warranty are printed at the back of this manual. A longer term warranty can be purchased from your InFocus dealer. Refer to page 48 for the part number.

SETTING UP THE PROJECTOR

1 Place the projector on a flat surface.

- The projector must be within 10 feet (3 m) of your power source and within 8 feet (2.4 m) of your computer.
- If you want to project from behind a translucent screen, set up the projector behind your screen. See “Rear Projection” on page 31 to reverse the image.
- If you are installing the projector on the ceiling, refer to the *Ceiling Mount Installation Guide* that comes with the Ceiling Mount Kit for more information. To turn the image upside down, see “Ceiling Projection” on page 30. The Ceiling Mount Kit is sold separately; see page 48.

2 Position the projector the desired distance from the screen.

- The distance from the lens of the projector to the screen and the zoom setting determine the size of the projected image. Figure 4 shows three projected image sizes. For information about image sizes at minimum and maximum zoom settings, see “Projected Image Size” on page 55.

3 Make sure the projector and your computer are turned off.

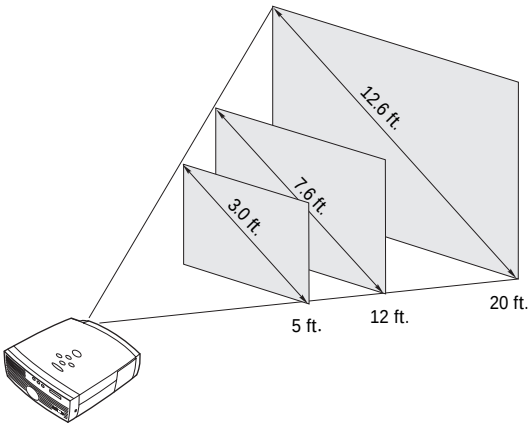

FIGURE 4

Projected image size for LP425z at minimum focusing distance

CAUTION: *Turn off the computer, monitor and projector whenever you connect or disconnect cables.*

NOTE: *The projectors are optimized for use with newer CableWizards (2 and 3). If you have a CableWizard 1from older models of InFocus projectors, we do not recommend using it as image quality is reduced. The label on the bottom reads CableWizard or CableWizard II or CableWizard^3.*

NOTE*: In some older computers, the monitor connector does not have a hole for Pin 9. If you have trouble connecting the CableWizard cable to your computer, contact InFocus Technical Support.*

Connecting the CableWizard™^{3} to the Projector

The CableWizard^3 (referred to as "CableWizard" in this manual for brevity) simplifies the connection process by providing a central hub for all the connections between the projector and your computer. The connectors on the CableWizard are labeled with icons. The CableWizard also has an LED that lights solid green when the projector is on and CableWizard is functioning properly. A slowly blinking LED indicates CableWizard is waiting to initialize with the projector; a rapidly blinking LED indicates a problem with CableWizard.

Connect the end of the CableWizard cable to the connector on the projector's connector panel (Figure 5).

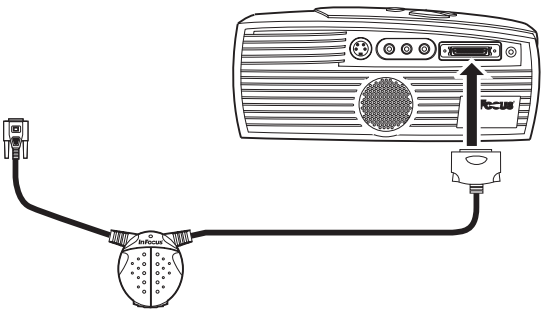

FIGURE 5

Connecting the CableWizard to the projector

Preparing to Connect Your Equipment to the Projector

Now you're ready to connect your equipment. Computers are connected to the CableWizard. Video players are connected directly to the projector.

Steps for connecting the different types of equipment are given on the pages listed below.

Equipment you want to connect	Page
Laptop computer with CableWizard	page 10
Desktop computer with CableWizard	page 12
USB or PS/2 mouse	pages 10-11, page 13
Video player	page 14

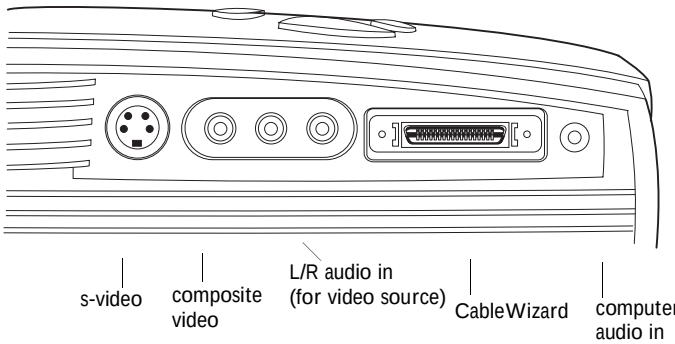

FIGURE 6

Connector panel

***NOTE**: Before you continue, make sure the projector and your equipment are turned off. If you're connecting a computer, make sure the distance between it and the projector is 10 feet or less.*

***NOTE**: The computer audio in connector on the connector panel is only used with the optional CableWizard Lite cable. If you are using CableWizard, the audio cable should be connected to the CableWizard, not directly to the projector.*

***NOTE:** If you are connecting an older Macintosh computer that does not have a 15-pin connector, you must use a Mac adaptor between the computer and the CableWizard. See "Optional Accessories" on page 48.*

NOTE: *Many laptop computers do not automatically turn on their external video port when a secondary display device such as a projector is connected. Refer to your computer manual for the command that activates the external video port. Activation commands for some laptop computers are listed in the Appendix.*

NOTE: *If you don't want audio or mouse control, you can use a simplified cable called CableWizard Lite, ordered separately.*

NOTE: *If you are connecting an older Macintosh computer that does not have a 15-pin connector, you must use a Mac adaptor between the computer and the CableWizard. See "Optional Accessories" on page 48.*

Connecting a Laptop Computer

1 Plug the end of the CableWizard cable into the video connector on your laptop.

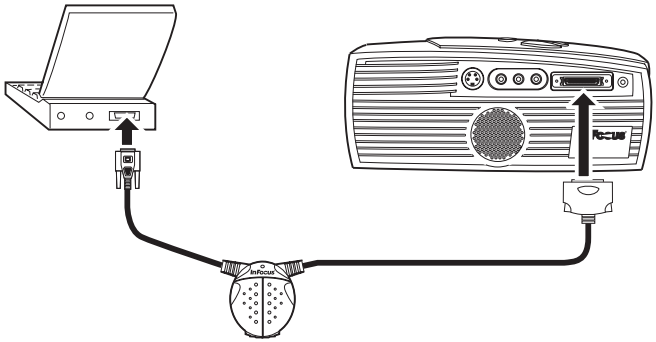

FIGURE 7

Connecting the CableWizard to a laptop computer

Do you want to play your computer's audio on the projector?

1 Plug either end of the CableWizard audio cable into the audio connector on your computer.

2 Plug the other end of the audio cable into the connector on the CableWizard.

Do you want to control the computer's mouse from the projector's remote or keypad?
If your computer has a PS/2 connector, use the PS/2 mouse cable

1 Plug the end of the CableWizard mouse cable into the mouse connector on your computer.

2 Plug the end of the CableWizard mouse cable into the connector on the CableWizard.

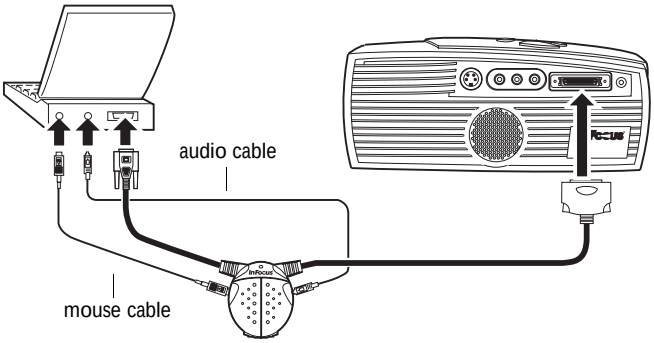

FIGURE 8

Connecting the CableWizard audio and mouse cables to a laptop computer

If your computer has a USB connector and is running Windows 98, use the USB mouse cable

1. Plug the end of the CableWizard mouse cable into the mouse connector on your computer.

2. Plug the end of the CableWizard mouse cable into the connector on the CableWizard.

You must have the appropriate USB drivers installed on your computer to use the USB feature. Windows 98 ships with the appropriate drivers.

Now you're ready to power up the projector and your laptop. Skip to "Powering up the Projector and Adjusting the Image" on page 16.

NOTE: *The USB mouse is supported for use with Windows 98 only.*

NOTE: *A USB mouse is hot-pluggable, meaning you do not need to re-boot your computer after connecting the mouse to use it. A PS-2 mouse is not hot-pluggable.*

Connecting a Desktop Computer

1 Locate the cable that connects your monitor to your computer. Unplug it from the computer.

2 Plug the end of the CableWizard cable into the monitor connector on your computer.

NOTE: *If you are connecting an older Macintosh computer that does not have a 15-pin connector, you must use the Mac adaptor between the computer and the CableWizard. See "Optional Accessories" on page 48.*

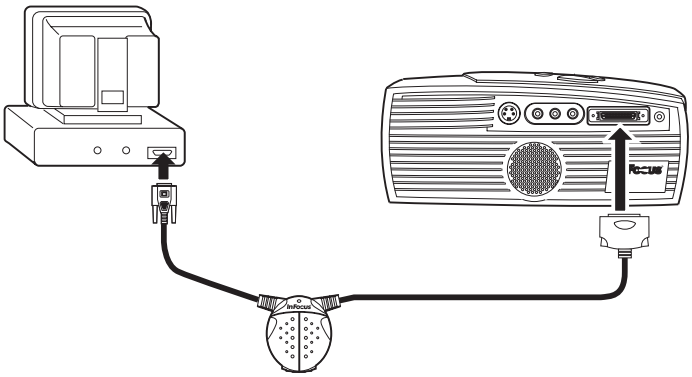

FIGURE 9

Connecting the CableWizard cable to a desktop computer

Do you want to display the image on your computer's monitor as well as on the projection screen?

1 Plug your monitor's cable into the connector on the CableWizard.

NOTE*: The projector must be turned on to display the image on your monitor.*

Do you want to play your computer's audio on the projector?

1 Unplug the audio cable, if present, from your computer.

2 Plug either end of the CableWizard audio cable into the audio connector on your computer.

3 Plug the other end of the audio cable into the connector on the CableWizard.

Do you want to control your computer's mouse from the projector's remote or keypad?
If your computer has a PS/2 connector, use the PS/2 mouse cable

1 Unplug the mouse cable from your computer.

2 Plug the end of the CableWizard mouse cable into the mouse connector on your computer.

3 Plug the end of the CableWizard mouse cable into the connector on the CableWizard.

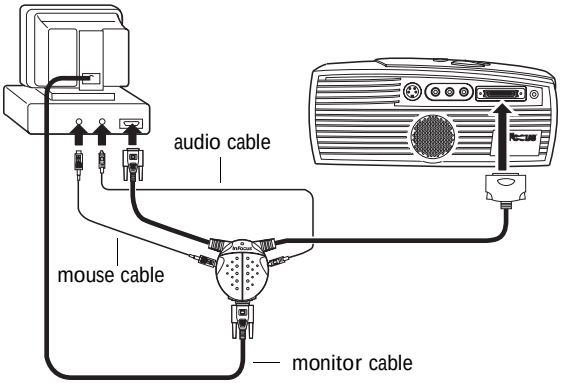

FIGURE 10

Connecting the CableWizard monitor, audio and mouse cables to a desktop computer

***NOTE**: A USB mouse is hot-pluggable, meaning you do not need to re-boot your computer after connecting the mouse to use it. A PS-2 mouse is not hot-pluggable.*

If your computer has a USB connector and is running Windows 98, use the USB mouse cable

1 Plug the end of the CableWizard mouse cable into the mouse connector on your computer.

2 Plug the end of the CableWizard mouse cable into the connector on the CableWizard.

You must have the appropriate USB drivers installed on you computer to use the USB feature. Windows 98 ships with the appropriate drivers.

Now you're ready to power up the projector and your computer. Skip to "Powering up the Projector and Adjusting the Image" on page 16.

***NOTE:** The USB mouse is supported for use with Windows 98 only.*

Connecting a Video Player

1. If your video player uses a round, one-prong composite video connector, you'll need only the A/V cable that shipped with the projector.
   - If your video player uses a round, four-prong S-video connector, you'll need an S-video cable in addition to the A/V cable. The S-video cable is sold separately. (See "Optional Accessories" on page 48.)
2. Plug the A/V cable's yellow connector into the "video-out" port on your video player (Figure 11). This port may be labeled "To Monitor."
   - If you're using an S-video cable, connect it to the "s-video out" connector on the video player (Figure 12).
3. Plug the other yellow connector into the composite connector on the back of the projector.
   - If you're using S-video, plug the other end of the cable into the "s-video" connector on the projector (Figure 12).

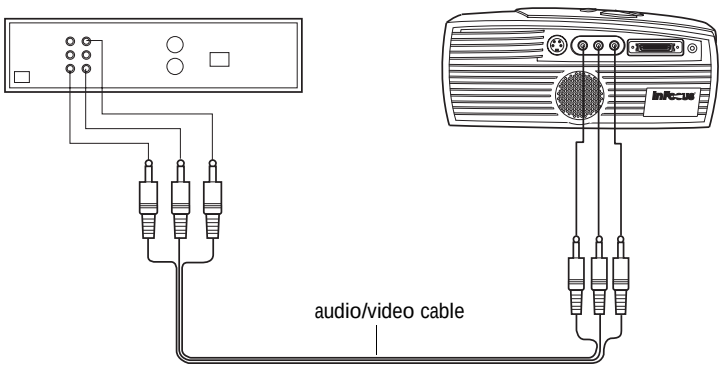

FIGURE 11

Connecting the projector to a video player using the standard A/V cable (with composite video connector)

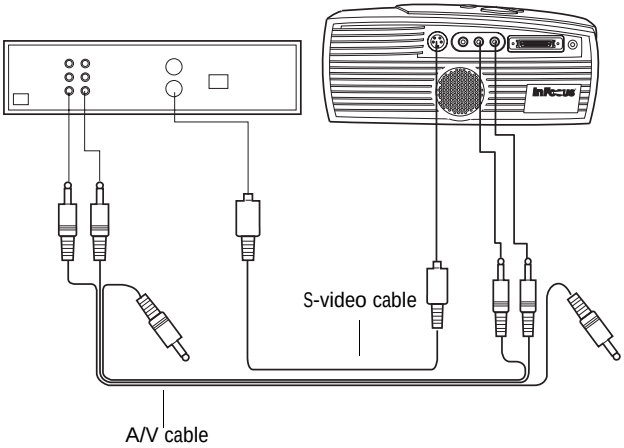

FIGURE 12

Connecting the projector to a video player using an S-video cable and the audio connectors on the standard A/V cable

4 Plug the A/V cable's white connector into the left "audio out" port on your video player. Plug the cable's red connector into the right "audio out" port on the video player (Figure 11 and Figure 12).

- If you're using an S-video cable, the yellow connectors on the A/V cable remain unused (Figure 12).

5 Plug the A/V cable's other white and red connectors to the left and right "audio in" ports on the projector.

The projector is compatible with these major broadcast video standards: NTSC, NTSC 4.43, PAL, PAL-M, PAL-N, and SECAM. It automatically adjusts to optimize its performance for the incoming video. The input signals for SECAM, PAL-M, and PAL-N video are similar to other video signals and cannot be automatically detected, therefore they must be chosen manually. See "Video Standard" on page 30 for details.

CAUTION: *Your video player may also have a "Video Out" port for a coaxial cable connection. DO NOT use this to connect to the projector.*

NOTE: Always use the power cord that shipped with the projector.

Powering up the Projector and Adjusting the Image

1. Remove the lens cap.
2. Plug the power cord into the side of the projector, then plug it into your electrical outlet. A surge-protected power strip is recommended.
3. Turn on the projector by pressing the "I" side of the power switch (see Figure 2 on page 4).
   - The InFocus startup screen displays and the Power LED on top of the projector lights up (Figure 16 on page 22).
4. If you connected a video player, turn it on.
   - The video image should display on the projection screen. If a computer source is active, press the **source** button on the keypad (page 22) or the **video** button on the remote to display your video image. You can select a default source to determine which source the projector examines first during power-up for active video; see "Default Source" on page 31.
   - Use the **volume** buttons to adjust the volume.
5. Turn on your computer.
   - The computer image should display on the projection screen. (If a video source is active, press the **source** button on the keypad (page 22) or the **computer** button on the remote to display your computer's image.)
   - If necessary, make adjustments to the image from the projector's on-screen menus. To open the menus, press the **menu** button on the keypad or remote, then select the Display or Image sub-menu. For more information about the menus, see page 24.

NOTE: With some computers, the order in which you power up the equipment is very important. Most computers should be turned on last, after all other peripherals have been turned on. Refer to your computer's documentation to determine the correct order.

Turning Off the Projector

If you want to turn off the projector for a short period of time, press the **standby** button on the keypad or remote. This blanks the screen for fifteen minutes, but keeps the projector running. (You can change the amount of time the projector stays in standby mode; see “Standby Time” on page 30 for details.) After 15 minutes, the lamp goes out (the projector keeps running). To exit standby mode, press the **standby** button again. (It may take several seconds for the projection lamp to reach full power and project the image again.)

To completely power off the projector, press the “O” side of the power switch on the side of the projector. If you want to turn the projector back on immediately, you must allow about a minute for the lamp to cool. The lamp won’t light if it’s too hot.

CAUTION: *When you disconnect the projector after you have switched it off, always remove the power cord from the electrical outlet first, then remove it from the projector.*

USING THE PROJECTOR

This section describes how to use and make adjustments to the projector. It also provides a reference to the keypad and remote buttons and the options available from the on-screen menus.

Basic Image Adjustment

1. Make sure you have powered up your equipment in the right order (page 16).
2. If the image doesn't display completely, zoom the image (page 21), adjust the height of the projector (page 21) or center the image by adjusting its horizontal or vertical position (page 29). Be sure the projector is at a 90 degree angle to the screen.
3. If the image is out of focus, rotate the focus lens (page 21).
4. If the image appears to shimmer or if it has blurry vertical bars after you have adjusted the focus, turn Auto Image (page 28) off and then back on to reset the automatic sync and tracking. If that doesn't clear up the image, turn Auto Image off and adjust the sync (page 28) and/or the tracking (page 29) manually.
5. If the colors don't look right, adjust the brightness (page 25).

Using the Remote Control

Point the remote control at the projection screen or at the front or rear of the projector. The range for optimum operation is about 25 feet. If you point the remote at the projection screen, the distance to the screen and back to the projector must be less than or equal to 25 feet. For best results, point the remote directly at the projector.

The projector ships with a remote that has four function buttons, a disk mouse and two mouse buttons, one on the top of the remote and one on the bottom.

NOTE: *If you can't aim the remote control at the projector so that its signal is received — for example, when using rear projection —purchase the optional LaserPro remote and connect it directly to the projector with the optional remote control cable. See "Optional Accessories" on page 48.*

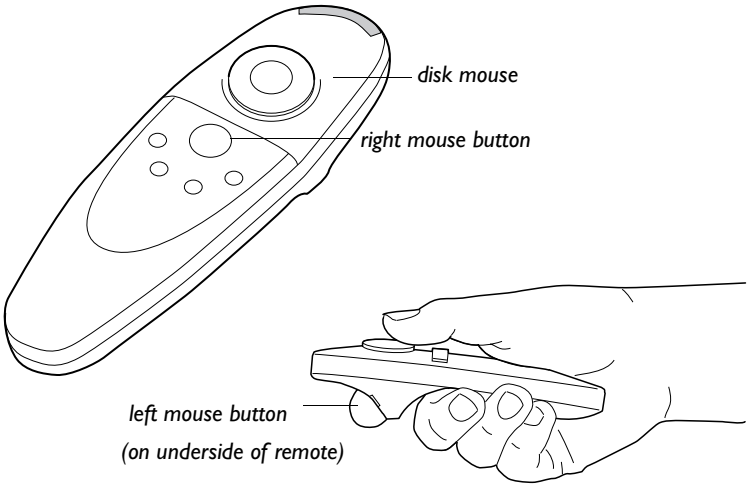

FIGURE 13

Remote control

Press anywhere on the edge of the disk mouse to move the cursor on the screen. You can move the cursor at any angle by pressing the corresponding edge of the disk. The mouse button on the top of the remote simulates your computer's right mouse button; the button on the bottom simulates your computer's left mouse button. See "Using the Keypad and Remote Buttons" starting on page 22 for a description of the four function buttons.

NOTE: *To control the computer's mouse from the projector's remote or keypad, you must connect the mouse cable to the CableWizard. See page 10 for details.*

If you are creating presentations in Microsoft® PowerPoint®, you can use the remote's mouse buttons to navigate through your presentation while in Slide Show mode. To configure PowerPoint for this, choose Options from the Tools menu, click the View Tab, de-select the "Popup Menu on Right Mouse Click" option in the Slide Show section, then click OK. Then, when you're in PowerPoint's Slide Show mode, a left click advances to the next slide and a right click returns to the previous slide (other PowerPoint modes are not affected).

Adjusting the Projector

To focus the image, rotate the focus ring (Figure 14) until the image is clear. To zoom the image, rotate the zoom ring. This adjusts the image size without affecting focus.

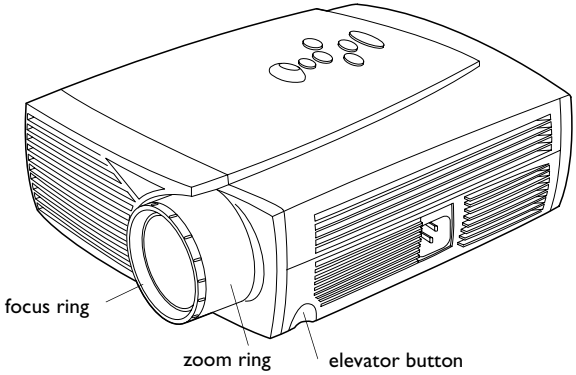

FIGURE 14

Focus ring, zoom ring, and elevator button

The projector is equipped with a self-locking, quick-release elevator foot and button (Figure 14).

To raise the projector:

1. Press and hold the elevator button (Figure 15).
2. Raise the projector to the height you want, then release the button to lock the elevator foot into position.

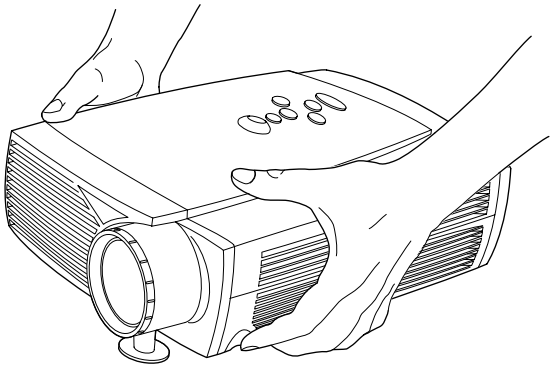

FIGURE 15

Adjusting the height of the projector

Using the Keypad and Remote Buttons

The keypad is lit orange when the projector is on and lit green while the menus are displayed. While the menus are displayed, the volume, source, and standby buttons act as navigation buttons. See "Using the On-Screen Menus" on page 24 for details.

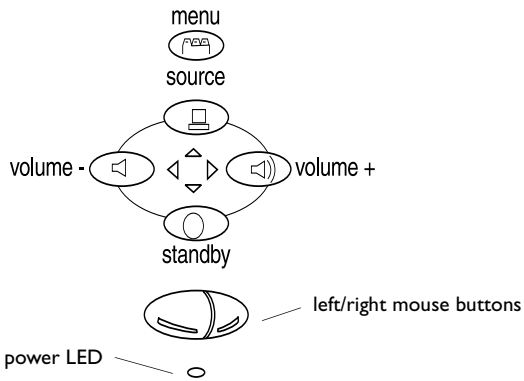

FIGURE 16

Keypad

Menu

Press **menu** to open the on-screen menus (the keypad lights green). Press **menu** again to close the menus. When you close the menus, the projector saves any changes you made. For more information about the on-screen menus, see page 24.

Mouse buttons

Use the left and right mouse buttons to make selections and adjustments in the menus. See "Using the On-Screen Menus" on page 24 for details.

Source (keypad only) or Computer and Video (remote only)

When you have more than one source (computer and video) connected to the projector, select between them by pressing the source button on the keypad or the Computer or Video button on the remote.

Standby

When you press **standby**, the display and audio turn off and a blank screen is displayed for 15 minutes. You can change the amount of time the projector stays in standby mode; see "Standby Time" on page 30 for details.

- If you press **standby** again within 15 minutes, the projector returns to normal operations immediately.
- If you press **standby** again after 15 minutes, there is about a 30 second delay before the lamp turns back on.
- If you don't press **standby** again, the lamp turns off after 15 minutes.

Volume (keypad only)

- To increase the volume, press
- To decrease the volume, press

Volume adjustments are saved for each source you have connected.

Using the On-Screen Menus

The projector has six drop-down menus that allow you to make image adjustments and change a variety of settings. Most of these adjustments aren't available directly from the keypad.

To open the on-screen menus, press the **menu** button on the keypad or remote. This changes the volume, source, and standby buttons on the keypad to menu navigation buttons (and illuminates the keypad green). Press the corresponding buttons to move the cursor up, down, left, or right, or use the disk mouse on the remote. To select a menu, move the cursor left and right to highlight the menu you want. The drop-down menu appears.

NOTE: *Some menu items may be grayed out at certain times. This indicates the item is not applicable to your setup (for example, video standards do not apply to computer sources) or the item is not enabled until another selection is made (for example, Manual Tracking is not available until Auto Image is turned off).*

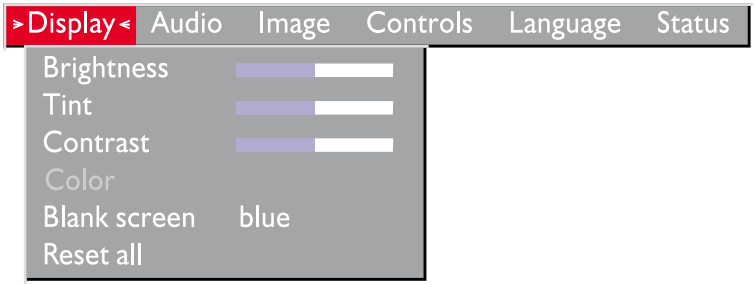

FIGURE 17

Drop-down menu

To change a menu setting, use the up and down arrow keys on the keypad or the disk mouse on the remote to move the cursor up and down to the item you want to change (the selected item is highlighted red), then use the left and right mouse buttons (not the left and right arrow buttons) to adjust a setting. Some sub-menus, such as Brightness, consist of a slider bar you use to increase or decrease a value; some submenus, such as Standby Time, consist of options you scroll through to select the desired one. All changes are saved when you close the menus.

To access another menu, use the left and right arrow buttons or the disk mouse to move left or right to another menu.

Display Menu

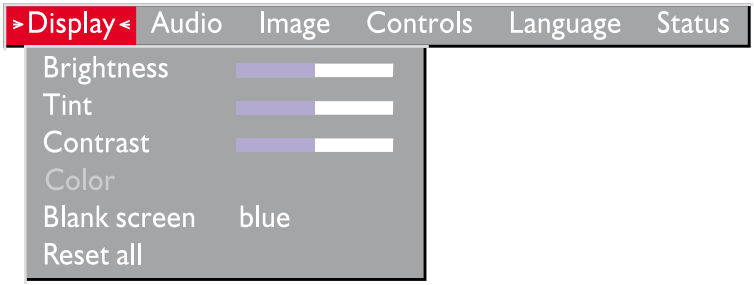

FIGURE 18

Display menu

Brightness

Adjusting the brightness changes the intensity of the image.

- Press the left mouse button to darken the image.
- Press the right mouse button to lighten the image.

Tint

The tint adjusts the red-green color balance in the projected image. Changing the Tint setting has no effect on PAL or SECAM video sources.

- Press the left mouse button to increase the amount of green in the image.
- Press the right mouse button to increase the amount of red in the image.

Contrast

The contrast controls the degree of difference between the lightest and darkest parts of the picture. Adjusting the contrast changes the amount of black and white in the image.

- Press the left mouse button to decrease the contrast.
- Press the right mouse button to increase the contrast, making the blacks appear blacker and the whites appear whiter.

Color

The color setting adjusts a video image from black and white to fully saturated color.

- Press the left mouse button to decrease the amount of color in the image.
- Press the right mouse button to increase the amount of color in the image.

Blank Screen

Blank Screen determines what color is displayed when there is no active source and when the projector is in standby. Click either mouse button to toggle between blue and black.

Reset All

Click either mouse button to reset all the options (except Language, Video Standard, Ceiling and Rear Projection, and Standby Time) in all the menus to their original settings. This also returns Freeze and Mute to their default (off) settings.

Audio Menu

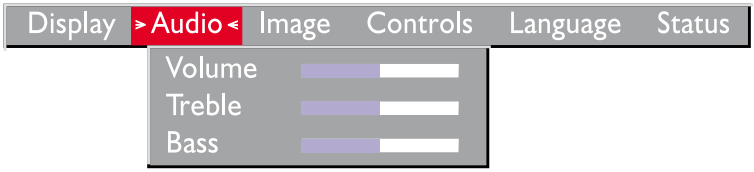

FIGURE 19

Audio menu

Volume

- Press the left mouse button to decrease the volume.
- Press the right mouse button to increase the volume.

Volume adjustments you make are saved for each source.

Treble

The treble setting controls the high frequencies of your audio source.

- Press the left mouse button to decrease the treble.
- Press the right mouse button to increase the treble.

Treble adjustments are saved for each source you have connected.

Bass

The bass setting controls the low frequencies of your audio source.

- Press the left mouse button to decrease the bass.
- Press the right mouse button to increase the bass.

Bass adjustments are saved for each source you have connected.

NOTE: *Changing the volume from the menu is the same as changing it using the keypad.*

Image Menu

FIGURE 20

Image menu

NOTE: *Some screen savers interfere with the operation of Auto Image. If you're experiencing problems, try turning your screen saver off, then turning Auto Image off and back on.*

Auto Image

The projector automatically adjusts tracking, signal synchronization and vertical and horizontal position for most computers (Auto Image does not apply to video sources). If you want to adjust these features manually, you must turn off **Auto Image** first by highlighting Auto Image in the Image menu and clicking either mouse button to select "off".

Auto Resize

Auto Resize automatically resizes the image by scaling it up or down. It only affects computer images that are not the projector's native resolution.

When **Auto Resize** is on, the projector makes the best fit of the image to the screen. If you turn **Auto Resize** off (by highlighting it in the Image menu and clicking either mouse button to select "off"), the image may be either cropped or too small for the screen.

Manual Sync

The projector adjusts signal synchronization automatically for most computers. But if the projected computer image looks fuzzy or streaked, try turning **Auto Image** off then back on again. If the image still looks bad, try adjusting the signal synchronization manually:

1. Turn Auto Image off.
2. Highlight Manual sync, then press either mouse button repeatedly until the image is sharp and free of streaks.

Manual Tracking

The projector adjusts tracking automatically to match the video signal from your computer. However, if the display shows evenly spaced, fuzzy, vertical lines or if the projected image is too wide or too narrow for the screen, try turning **Auto Image** off then back on again. If the image is still bad, try adjusting the tracking manually:

1. Turn Auto Image off.
2. Highlight Manual tracking, the press either mouse button repeatedly until the fuzzy vertical bars are gone.

Positioning adjustments are saved when you power off the projector.

Horizontal position

Follow these steps to manually adjust the horizontal position:

1. Turn Auto Image off.
2. Highlight Horizontal position, then press the left mouse button to move the image right or press the right mouse button to move the image left.

Positioning adjustments are saved when you power off the projector.

Vertical position

Follow these steps to manually adjust the vertical position.

1. Turn Auto Image off.
2. Highlight Vertical position, then press the left mouse button to move the image down or press the right mouse button to move the image up.

Positioning adjustments are saved when you power off the projector.

NOTE: *The* ***Manual Sync***, ***Manual Tracking***, ***Horiz. Position*** *and* ***Vert. Position*** *options are available only for computer sources. The projector sets these options automatically for a video source.*

Controls Menu

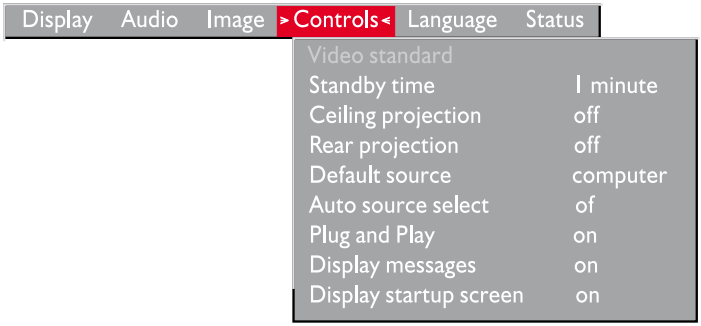

FIGURE 21

Controls menu

NOTE: *If you already know the video standard used in your geographical area, it's often best to manually select it.*

Video Standard

When Video standard is set to Auto, the projector attempts to pick the video standard (NTSC, NTSC 4.43, PAL, PAL-M, PAL-N, or SECAM) automatically based on the input signal it receives. (The video standard options may vary depending on your region of the world.) The input signals for SECAM, PAL-M, and PAL-N video cannot be automatically detected, therefore they must be chosen manually. If the projector is unable to detect the correct standard, the colors might not look right or the image might appear "torn." If this happens, manually select a standard by clicking either mouse button and cycling through the standards.

Standby Time

This option lets you select how long the lamp stays on and the blank screen is displayed when the projector enters standby mode before the projector turns off. Select among 1, 5, 10, and 15 minutes and 1 and 2 hours by clicking either mouse button and cycling through the options.

NOTE: *To order the LP425 Ceiling Mount, refer to "Optional Accessories" on page 48.*

Ceiling Projection

When you turn **Ceiling Projection** on, the projector turns the image upside down for ceiling-mounted projection. Highlight Ceiling Projection, then click either mouse button to turn this feature on and off.

Rear Projection

When you turn **Rear Projection** on, the projector reverses the image so you can project from behind a translucent screen. Highlight Rear Projection, then click either mouse button to turn this feature on and off.

Default Source

Default Source toggles between Computer and Video. This determines which source the projector checks first for active video during power-up. Highlight Default Source and click either mouse button to toggle between the options.

Auto Source Select

This setting toggles between On and Off. When this feature is Off, the projector defaults to the source selected in Default Source. To display another source, you must manually select one by pressing the **source** button on the keypad. When this feature is On, the projector automatically finds the active source, checking the default source first. Highlight Auto Source Select and click either mouse button to turn this feature on and off.

Plug and Play

This setting toggles between On and Off. When it is On, most new computers will automatically recognize the projector, then set the monitor resolution and refresh rate accordingly. You need to set the Plug and Play setting to Off for the projector to display properly on some older computers. The Plug and Play setting does not affect video images.

If the projector's display constantly changes between the computer image and the message, "Perfecting the image", you may need to set Plug and Play to Off.

Display Messages

This setting toggles between On and Off. When this feature is On, status messages such as "No signal detected" or "Standby Active" appear in the lower-right corner of the screen. Click either mouse button to turn this feature off and not see status messages.

Display Startup Screen

This setting toggles between On and Off. When this feature is On, the InFocus startup screen appears when the projector starts up and remains until an active source is detected. The startup screen contains information on contacting InFocus. Click either mouse button to turn this feature off and display a plain black or blue screen instead of the startup screen.

Language Menu

FIGURE 22

Language menu

You can display the on-screen menus in English, French, German, and Spanish.

- Move the cursor to the language you want, then click either mouse button. The menus redraw immediately.

Status Menu

This is a read-only window for informational purposes. To display the status window, select Show status from the menu, then click either mouse button. To remove the window, click either mouse button.

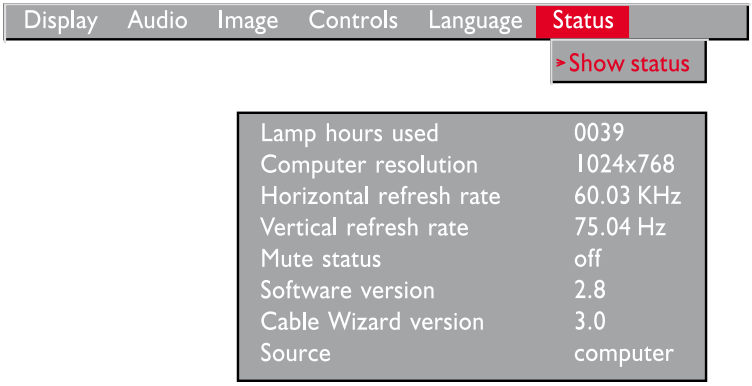

FIGURE 23

Status menu

Lamp hours used

Indicates how many hours the current lamp has been in use. The counter starts at zero hours and counts each hour the lamp is in use. Change the bulb when the brightness is no longer acceptable. See "Replacing the Projection Lamp" on page 35 for details.

Computer resolution

Shows your computer's resolution setting. To change this, go to your computer's Control Panel and adjust the resolution in the Display tab. See your computer's user's guide for details.

Horizontal refresh rate

The time period that one horizontal line is displayed.

Vertical refresh rate

The time period that one video frame is displayed.

Mute status

Indicates if the audio is muted.

Software version
Indicates the projector's software version. This information is useful when contacting Technical Support.

CableWizard version
Indicates the CableWizard's software version. This information is useful when contacting Technical Support.

Source
Indicates the active source, Computer or Video.

MAINTENANCE & TROUBLESHOOTING

This section describes how to:

- clean the lens
- replace the projection lamp
- replace the batteries in the remote
- use the Kensington lock feature
- troubleshoot the projector

Cleaning the Lens

Follow these steps to clean the projection lens:

1. Apply a non-abrasive camera lens cleaner to a soft, dry cloth.
   - Avoid using an excessive amount of cleaner.
   - Abrasive cleaners, solvents or other harsh chemicals might scratch the lens.
2. Lightly wipe the cleaning cloth over the lens.
3. If you don't intend to use the projector immediately, replace the lens cap.

Replacing the Projection Lamp

The lamp hour counter in the Status menu counts the number of hours the lamp has been in use. The projectors use a metal halide bulb. These types of bulbs deteriorate over time. Replace the lamp when the brightness is no longer acceptable. You can order new lamp modules from your InFocus dealer. See "Accessories" on page 47 for information.

Follow these steps to replace the projection lamp:

1. Turn off the projector and unplug the power cord.
2. Wait 30 minutes to allow it to cool thoroughly.
3. Place the projector on its side, then insert a small screwdriver or other flat object into the tabs on the lamp module door (Figure 24).

WARNING: *To avoid burns, allow the projector to cool for at least 30 minutes before you open the lamp module door. Never extract the lamp module while the lamp is operating.*

4 Pull the lamp door up and remove it.

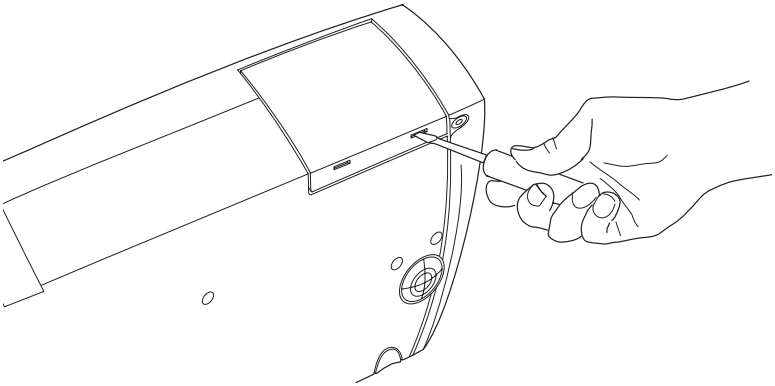

FIGURE 24

Removing the lamp door

CAUTION: *Never operate the projector with the lamp door open or removed. This disrupts the air flow and causes the projector to overheat.*

5 Loosen the two non-removable screws on the outside of the module.

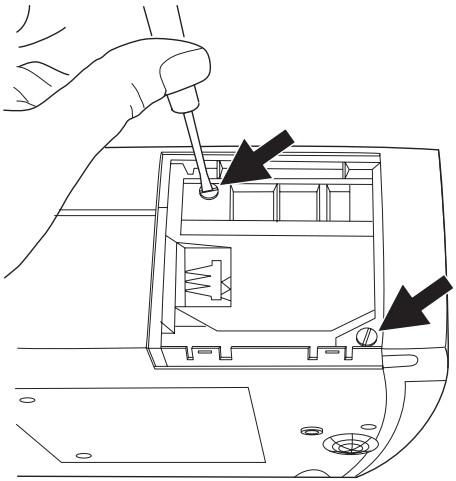

FIGURE 25

Loosening the screws on the lamp module

6 Slide the lamp connector to the right to disconnect it from the projector (Figure 26).

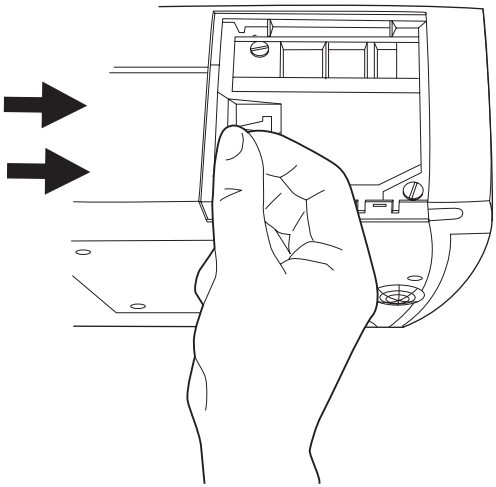

FIGURE 26

Sliding the lamp connector

7 Remove the module (Figure 27).

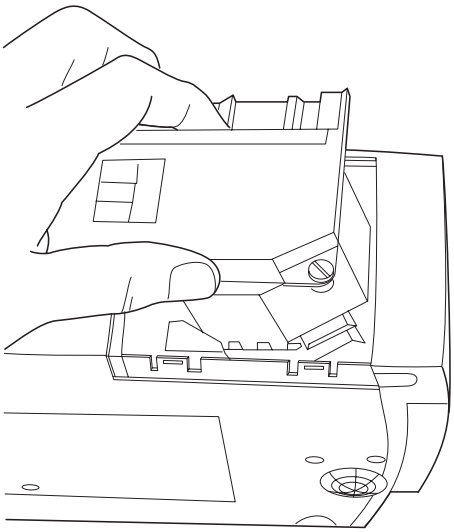

FIGURE 27

Removing the lamp module

WARNING: *Do not drop the lamp module or touch the glass bulb! The glass may shatter and cause injury.*

8 Align the new lamp module in the correct direction.

9 Gently push the module in as far as it goes.

10 Tighten the screws on the outside of the module.

11 Slide the lamp connector to the left to re-attach it.

12 Insert the tabs at the top of the lamp door into the projector and press the lamp door into place.

13 Plug in the power cord and turn the projector back on.

14 To reset the lamp hour counter in the Status window, press and hold the left mouse button, then press the menu button (while still holding down the mouse button) for 5 seconds. Verify that the counter was reset by pressing the menu button and viewing the counter in the Status window.

Replacing the Batteries in the Remote Control

The life of the batteries depends on how often and how long you use the remote. Symptoms of low battery charge include erratic responses when using the remote and a reduced range of operation.

Follow these steps to replace the batteries:

1 Turn the remote face down in your hand.

2 Slide the battery cover off the end of the remote by pressing on it with the heel of your hand.

3 Remove the old batteries.

4 Install two new AAA alkaline batteries. Make sure you install each in the correct direction.

5 Slide the battery cover back on the remote.

Using the Kensington Lock

The projector has a Kensington Security Standard connector for use with a Kensington MicroSaver Security System (Figure 28). Refer to the information that came with the Kensington System for instructions on how to use it to secure the projector.

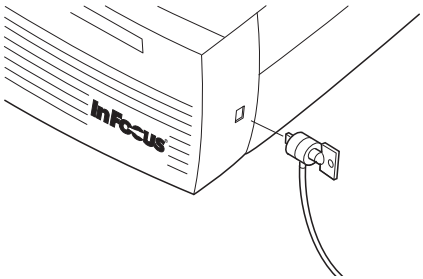

FIGURE 28

Installing the Kensington lock

Troubleshooting

Problem: Nothing on projection screen

- Make sure that the power cord is properly connected to a fully functional AC electrical outlet. Make sure that the power cord is also properly connected to the projector.
- If the projector is plugged into a power strip, make sure the power strip is turned on.
- Make sure you have removed the lens cap on the projection lens at the front of the projector.
- Make sure the projector is switched on.
- Check the projector's lamp to ensure that it is securely connected in the lamp module. See "Replacing the Projection Lamp" on page 35.
- Make sure that the cables do not have any bent pins.

Problem: Color or text not being projected

- You might need to adjust the brightness up or down until the text is visible. Refer to "Brightness" on page 25 for more information.

Problem: The screen resolution is not right

- Make sure the computer's video card is set for a resolution of no greater than 1024x768.

Problem: Image isn't centered on the screen

- Reposition the image. Refer to "Horizontal position" on page 29 and "Vertical position" on page 29.
- Be sure the projector is at a 90 degree angle to the screen.

Problem: Only the start-up screen displays

- Verify that the cables are connected correctly. See page 10 through page 14 for connection procedures.
- Verify that the proper input source is connected. See "Source (keypad only) or Computer and Video (remote only)" on page 22.

- You might need to turn everything off and power up the equipment again in the proper order. Refer to your computer's documentation to determine the correct order.
- Make sure your laptop's external video port is turned on. See the "Portable and Laptop Activation Chart" on page 49 or your computer's manual for details.
- Make sure your computer's video board is installed and configured correctly.

If you're using Windows 3.x:

1. In the Windows Program Manager, double-click the Windows Setup icon in the Main program group.
2. Verify that the Display setting is 1024x768 or less.

If you're using Windows 95:

1. Open "My Computer" icon, the Control Panel folder and then the Display icon.
2. Click the Settings tab.
3. Verify that the Desktop area is set to 1024x768 or less.

Also check the following:

- Does your computer have a compatible video board? The projector isn't CGA or EGA compatible.
- Is your computer's video port activated? This is especially true for laptop computers. See "Portable and Laptop Activation Chart" on page 49.

Problem: Image is too wide or narrow for screen

- You might need to manually adjust the tracking to reduce or enlarge the projected image. Refer to "Manual Tracking" on page 29.
- Adjust the resolution of your video card if it's greater than 1024x768.

Problem: Image is out of focus

- Turn the projection lens to focus the image.
- Make sure the projection screen is at least 5 feet (1.5 m) from the projector.
- Check the projection lens to see if it needs cleaning.

Problem: Image and menus are reversed left to right

- Rear projection mode is probably turned on. Turn Rear Projection off in the Controls menu. The image should immediately return to forward projection. See "Rear Projection" on page 31.

Problem: the projector displays vertical lines, "bleeding" or spots

- Adjust the brightness. See "Brightness" on page 25.
- Check the projection lens to see if it needs cleaning.

Problem: no sound

- Adjust volume.
- Verify audio/input connections.
- Adjust audio source.

Problem: Image is "noisy" or streaked

Try these steps in this order.

1. Deactivate the screen saver on your computer.
2. Turn **Auto Image** off and then back on again. See "Auto Image" on page 28.
3. Adjust the synchronization and tracking manually to find an optimal setting. See "Manual Sync" on page 28 and "Manual Tracking" on page 29.

- The problem could be with your computer's video card. If possible, connect a different computer.

Problem: Projected colors don't match the computer or video player's colors

- Just as there are differences in the displays of different monitors, there are often differences between the computer image and the projected image. Adjust the brightness, tint and / or contrast from the Display menu. See "Brightness" on page 25, "Tint" on page 25 and "Contrast" on page 25.

Problem: Lamp seems to be getting dimmer

- The lamp begins to lose brightness when it has been in use for a long time. Replace the lamp as described in "Replacing the Projection Lamp" on page 35.

Problem: Lamp shuts off

- A minor power surge may cause the lamp to shut off. Turn the projector off, wait at least a minute, then turn it back on.

The most current troubleshooting information can be found in the Service and Support section of our website at **http://www.infocus.com/service.**

Before calling your dealer or InFocus Technical Support for assistance, please have the following information available:

- the projector's serial number (located on the bottom label)
- the resolution of your computer.

Call InFocus Technical Support at **1-800-799-9911** between 6 a.m. and 6 p.m. PST, Monday through Friday. Service is available in North America after hours and on weekends for a fee at **1-888-592-6800**.

In Europe, call InFocus in The Netherlands at **(31) 35-6474010** between 8 a.m. and 6 p.m. Central European Time.

In Asia, call **(65) 332-0659** between 9:30 a.m. and 5:30 p.m.

Or, send us an e-mail at **techsupport@infocus.com**

APPENDIX

Specifications

The projectors must be operated and stored within the temperature and humidity ranges specified.

Temperature	
Operating	50 to 104° F (10 to 40° C)
Non-operating	-4 to 158° F (-20 to 70° C)

Humidity	
Operating and non-oper.	5% to 95% relative humidity, non-condensing

Dimensions
3.9 x 9 x 12.5 inches (9.9 x 22.9 x 31.8 cm)

Weight
7.4 lbs (3.4 kg) unpacked

Altitude	
Operating	0 to 10,000 feet (3,048 meters)
Non-operating	0 to 40,000 feet (12,192 meters)

Optics	
Focus Range	5.0 - 16 feet (1.5-5 m)

Lamp	
Type	270-watt metal halide

Input Power Requirements
100-120VAC 6A;50/60Hz 200-240VAC 3A; 50Hz

Video Audio Input	
Input Impedance	5K ohm DC coupled
Maximum Input Voltage	$(L_{IN} + R_{IN})_{PEAK} < 4.5$ V for THD $\leq 0.3\%$ L_{IN} or $R_{IN} < 2.0$ Vrms for THD $\leq 0.3\%$
Sensitivity	100 mV at 1 KHz for 88 dB SPL at 1 meter
Connector Type	RCA jack

Computer Audio Input	
Input Impedance	10K ohm nominal, AC coupled
Maximum Input Voltage	$(L_{IN} + R_{IN})_{PEAK} < 4.5$ V for THD $\leq 0.3\%$ L_{IN} or $R_{IN} < 2.0$ Vrms for THD $\leq 0.3\%$
Sensitivity	100 mV at 1 KHz for 88 dB SPL at 1 meter
Connector Type	3.5 mm (1/8 inch) stereo phone jack

Accessories

Standard Accessories (ship with the projector)	Part Number
Quick Start card	009-0379-xx
LP425z/435z User's Guide	010-0192-xx
Soft Case	110-0190-xx
Shipping Box	110-0186-xx
CableWizard^3 and Cables	SP-CW3
CableWizard Audio Cable (2 ft)	210-0079-xx
CableWizard USB Cable (2 ft)	210-0100-xx
CableWizard PS/2 Mouse Cable (1.5 ft)	210-0145-xx
Executive Remote Plus with batteries	HW-EXPLUS
Projection Lamp Module	SP-LAMP-LP4z
Lens Cap	340-0573-xx
Audio/Video Cable	210-0053-xx
Online User's Guide CD-ROM	010-0116-xx

Power Cords (one ships with projector, type depends on country)

North American Power Cord	210-0023-xx
Australian Power Cord	210-0027-xx
UK Power Cord	210-0028-xx
European Power Cord	210-0029-xx
Danish Power Cord	210-0030-xx
Swiss Power Cord	210-0031-xx

NOTE: *Use only InFocus-approved accessories. Other products have not been tested with the projector.*

NOTE: *You can purchase these items by contacting your dealer or InFocus Catalog Sales at 1-800-660-0024.*

NOTE: *You can purchase these items by contacting your dealer or InFocus Catalog Sales at 1-800-660-0024.*

Optional Accessories

Personal Plus Accessory Pack, includes:	SP-PP-LP4
Deluxe Soft Case (CA-C132)	
CableWizard 3 (SP-CW3)	
Executive Remote (HW-EXREM)	
Deluxe Soft Case	CA-C132
ATA Travel Case	CA-C134z
Executive Leather Case	CA-C133
LP400 Series Deluxe Travel Case	CA-C141
Macintosh Adaptor	SP-MACADPT
CableWizard Lite computer cable 6.5 ft (2 m)	SP-CW2LITE
CableWizard Extension Cable, non-plenum rated, 60.7 ft (18.5 m)	SP-CW2EXT
CableWizard Extension Cable, plenum-rated, 60.7 ft (18.5m)	SP-CW2EXTP
CableWizard 2	SP-CW2
CableWizard 2 Installation Extension Cable, 70.5 ft (21.5 m) (CableWizard 2 only)	SP-CW2IEXT
RF Remote	HW-RF-REM
2-Button Executive Remote	HW-EXREM
Remote Receiver	HW-EXRCVR
Full-Feature Laser Pro Remote Control	HW-LASERPRO
Remote Cable, 50 ft (15 m)	SP-WIREM
LP400 Series Ceiling Mount-LiteMount 425	SP-CEIL-LM425
LiteMount False Ceiling Plate	SP-LTMT-PLT
LiteMount Pipe Tubing Extension	SP-LTMT-EXT
CableWizard Wall Plate	SP-CWWALL
Kensington MicroSaver Security System	SP-KENLOC
Tripod Mount	SP-TRIP-LP4
Portable Projector Stand	SP-STND
Portable Projection Screen	HW-HPSCRN
S-Video Cable	515-0027-xx
3rd Year Advantage Service Plan (1 year extension)	EW-LP4xx-12

Portable and Laptop Activation Chart

Many laptop computers do not automatically turn on their external video port when a secondary display device such as a projector is connected. Activation commands for some laptop computers are listed in the following table. (If your computer is not listed or the given command does not work, refer to the computer's documentation for the appropriate command.) On some laptops, the activation function key is labeled with an icon, for example ⊟/▢ or the text CRT/LCD.

Computer	Key command to activate port	Key command to de-activate port
Acer	Ctrl-Alt-Esc (for setup)	Ctrl-Alt-Esc (for setup)
AST* **	FN-D or Ctrl-D Ctrl-FN-D FN-F5 type from A:/IVGA/CRT FN-F12	FN-D or Ctrl-D Ctrl-FN-D FN-F5 type from A:/IVGA/CRT FN-F12
AMS	FN-F2	FN-F2
AMT	setup screen	setup screen
AT&T	FN-F3 FN-F6	FN-F3 FN-F6
Advanced Logic Research	Ctrl-Alt-V	Ctrl-Alt-V
Altima	Shift-Ctrl-Alt-C setup VGA/ Conf.Simulscan	Shift-Ctrl-Alt-L setup VGA/ Conf.Simulscan
Ambra**	FN-F12 FN-F5 F2/Choose Option/F5	FN-F12 FN-F5 F2/Choose Option/F5
Amrel* **	setup menu Shift-Ctrl-D	setup menu Shift-Ctrl-D
Apple	see Mac Portable and Mac PowerBook	
Aspen	automatic	automatic

NOTE: *Visit our website at www.infocus.com for the most current activation chart. It is located in the Technical Library in the Service and Support section.*

NOTE: *Often, pressing the key commands once activates the external video port, pressing it again activates both the external and internal ports, and pressing it a third time activates the internal port. Refer to your computer's documentation for details on your specific model.*

Computer	Key command to activate port	Key command to de-activate port
Austin	Ctrl-Alt-comma	Ctrl-Alt-comma
Award	FN-F6	FN-F6
BCC*	automatic	reboot computer
Bondwell	LCD or CRT options after bootup	reboot for LCD or CRT options to appear
Chaplet**	setup screen	setup screen
	FN-F6	FN-F6
	FN-F4	FN-F4
Chembook	FN-F6	FN-F6
Commax	Ctrl-Alt-#6	Ctrl-Alt-#5
Compaq* **	Ctrl-Alt-<	Ctrl-Alt->
	FN-F4	FN-F4
	automatic	automatic
	mode/? (for setup option)	mode/? (for setup option)
Compuadd* **	automatic	automatic
	Alt-F for screen setup option	Alt-F for screen setup option
Data General	Ctrl-Alt-Command	Ctrl-Alt-Command
Data General Walkabout	2 CRT/X at DOS prompt	reboot
Datavue	Ctrl-Shift-M	Ctrl-Shift-M
DEC**	FN-F5	FN-F5
	FN-F4	FN-F4
Dell**	Ctrl-Alt-<	Ctrl-Alt->
	Ctrl-Alt-F10	Ctrl-Alt-F10
	FN-F8 (CRT/LCD)	FN-F8
	FN-D	FN-D
	FN-F12	FN-F12
Digital*	automatic	reboot
	FN-F2	FN-F2
Dolch	dip switch to CRT	dip switch to LCD
Epson	dip switch to CRT	dip switch to LCD

Computer	Key command to activate port	Key command to de-activate port
Everex*	setup screen option	setup screen option
For-A	Ctrl-Alt-Shift-C	Ctrl-Shift-Alt-L
Fujitsu	FN-F10	
Gateway	FN-F3 FN-F1/FN-F1 again simul-taneous	FN-F3 FN-F1
Grid* **	FN-F2, choose auto or simultaneous Ctrl-Alt-Tab	FN-F2 Ctrl-Alt-Tab
Hitachi	FN-F7	FN-F7
Honeywell	FN-F10	FN-F10
Hyundai	setup screen option	setup screen option
IBM 970*	automatic	warm reboot
IBM ThinkPad**	reboot, enter setup menu	FN-F2
	FN-F7, select choice from setup menu FN-F1, select choice FN-F5, select choice PS/2 SC select choice (CRT, LCD, etc.)	
Infotel	FN-F12	FN-F12
Kaypro	boot up, monitor plugged in	unplug monitor
Kris Tech	FN-F8	FN-F8
Leading Edge	FN-T	FN-T
Mac Portable 100	no video port: not compatible	
Mac PowerBook		
140, 145, 150, 170	no video port: requires a 3rd-party interface	
160, 165, 180, 520, 540, 5300	Control Panel folder, PowerBook Display folder; Activate Video Mirroring	warm reboot
210, 230, 250, 270, 280, 2300	requires Apple Docking Station or Mini Dock	

Computer	Key command to activate port	Key command to de-activate port
Magitronic	FN-F4	FN-F4
Mastersport	FN-F2	FN-F1
Micro Express*	automatic	warm reboot
Micron	FN-F2	FN-F2
Microslate*	automatic	warm reboot
Mitsubishi	SW2 On-Off-Off-Off	SW2 Off-On-On-On
NCR	setup screen option	setup screen option
NEC* **	setup screen option	setup screen option
	CRT at the DOS prompt	LCD at the DOS prompt
	FN-F3	FN-F3
Olivetti*	automatic	automatic
	FN-O/*	FN-O/*
Packard Bell* **	FN-F0	FN-F0
	Ctrl-Alt-<	Ctrl-Alt->
Panasonic	FN-F2	FN-F2
Prostar	Ctrl-Alt-S at bootup	Ctrl-Alt-S at bootup
Samsung*	setup screen option	setup screen option
Sanyo	setup screen option	setup screen option
Sharp	dip switch to CRT	dip switch to LCD
Sun SPARC-Dataview	Ctrl-Shift-M	Ctrl-Shift-M
Tandy**	Ctrl-Alt-Insert	Ctrl-Alt-Insert
	setup screen option	setup screen option
Tangent	FN-F5	FN-F5
Texas Instru-ments*	setup screen option	setup screen option
Top-Link* **	setup screen option	setup screen option
	FN-F6	FN-F6
Toshiba* **	Ctrl-Alt-End	Ctrl-Alt-Home
	FN-End	FN-Home
	FN-F5	FN-F5
	setup screen option	setup screen option

Computer	Key command to activate port	Key command to de-activate port
Twinhead*	FN-F7	FN-F7
	FN-F5	FN-F5
	Automatic	Automatic
WinBook	Ctrl-Alt-F10	Ctrl-Alt-F10
Wyse	software driven	software driven
Zenith**	FN-F10	FN-F10
	FN-F2	FN-F2
	FN-F1	FN-F1
Zeos**	Ctrl-Shift-D FN-F1	Ctrl-Shift-D FN-F1

* These manufacturers have models that automatically send video to the external CRT port when some type of display device is attached.

** These manufacturers offer more than one key command depending on the computer model.

Using Video Mirroring with a PowerBook Computer

When you turn video mirroring (called SimulScan in newer PowerBooks-see below) on, the projector displays the same information that appears on your PowerBook's built-in screen. When video mirroring is off, the projector acts like a separate display.

To turn on video mirroring for the first time:

1. Open the Monitors control panel; click on Monitor 2.
2. Set the number of colors you want.
3. Open the Control Strip; click on the monitor icon.
4. Select "Turn Video Mirroring On."

Now you can turn video mirroring on and off from the Control Strip without having to open the Monitors control panel again.

When using video mirroring and high color graphics such as slide shows, the projected image occasionally might turn black and white. If this happens, perform the following steps:

1. Turn off video mirroring.
2. Open the Monitors control panel.
3. Move the white menu bar to Monitor 2 to set the projector as the primary monitor.
4. Restart the PowerBook.

Using SimulScan

Some newer PowerBooks display images on an external monitor or projector differently than previous ones. When using SimulScan, the projector displays the same information that appears on your PowerBook

To select SimulScan:

1. Open the Control Panel, then double-click Monitors and Sound.
2. In the Resolution list, choose the SimulScan mode, then click OK.
3. If this changes your display settings, a dialog box appears. Click OK to confirm the change.

Projected Image Size

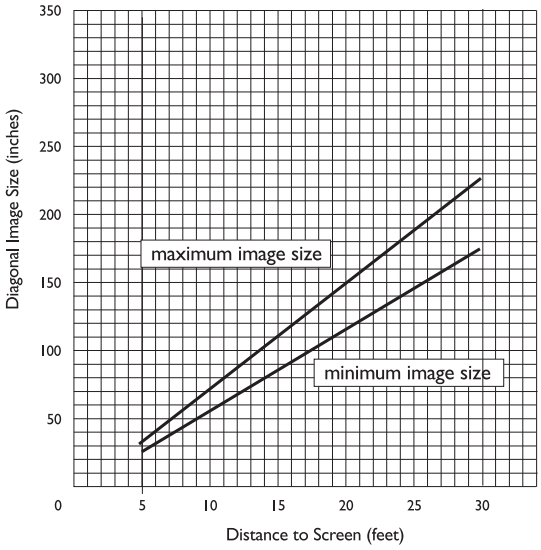

FIGURE 29

Projected image size for LP425z

NOTE: *Use these charts and tables to help you determine projected image sizes.*

NOTE: *Visit our website at www.infocus.com for an interactive image size calculator. It is located in the Technical Library in the Service and Support section.*

Table 1:
Image Size, Width and Height for LP425z-maximum image size

Distance to Screen (feet)	Diagonal (feet)	Width (feet)	Height (feet)
4.9	3.0	2.4	1.8
8	5.0	4.0	3.0
12	7.6	6.1	4.6
16	10.1	8.1	6.1
20	12.6	10.1	7.6
30	18.9	15.1	11.3

Table 2:
Image Size, Width and Height for LP425z-minimum image size

Distance to Screen (feet)	Diagonal (feet)	Width (feet)	Height (feet)
4.9	2.4	1.9	1.4
8	3.9	3.1	2.3
12	5.8	4.6	3.5
16	7.7	6.2	4.6
20	9.6	7.7	5.8
30	14.5	11.6	8.7

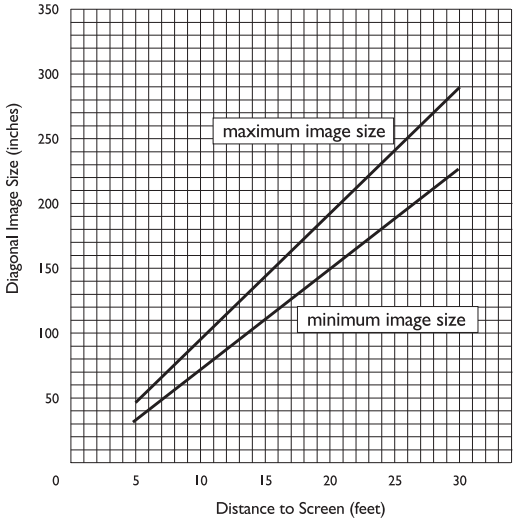

FIGURE 30

Projected image size for LP435z

Table 3:
Image Size, Width and Height for LP435z-maximum image size

Distance to Screen (feet)	Diagonal (feet)	Width (feet)	Height (feet)
4.9	3.6	2.9	2.2
8	6.5	5.2	3.9
12	9.7	7.8	5.8
16	12.9	10.3	7.7
20	16.0	12.8	9.6
30	24.5	19.6	14.7

Table 4:
Image Size, Width and Height for LP435z-minimum image size

Distance to Screen (feet)	Diagonal (feet)	Width (feet)	Height (feet)
4.9	3.0	2.4	1.8
8	5.0	4	3
12	7.4	5.9	4.4
16	9.9	7.9	5.9
20	12.4	9.9	7.4
30	18.6	14.9	11.2

INDEX

A

accessories, ordering 47, 48
activation commands for laptop computers 49
adjusting
- bass 27
- brightness 25
- color 26
- contrast 25
- tint 25
- treble 27
- volume 23, 27

adjusting the height of the projector 21
altitude limits 45
assistance. See Technical Support
Audio menu 27
Audio menu options
- Bass 27
- Treble 27
- Volume 27

Auto Source Select 31

B

bass, adjusting 27
Blank Screen 26
brightness, adjusting 25
buttons on keypad
- Menu 22
- Source 22
- Standby 23
- Volume 23

C

cables
- A / V 14, 47
- CableWizard 3, 8, 47
- CableWizard extension 48
- composite video 14
- extension 48
- mouse 11
- ordering 47
- power 47
- S-video 14, 48

CableWizard
- cables 3, 8, 47
- connecting to equipment 9
- connecting to the projector 8

cases, ordering 47
ceiling-mounted projection 30, 48
cleaning the projection lens 35
color, adjusting 26
colors
- don’t match monitor colors 43
- not displayed 40

compatibility
- IBM-compatible 2
- Macintosh 2

composite video cable
- connecting 14
- ordering (A / V cable) 47

computers, compatible 2
connecting
- IBM-compatible desktop computer 12–13
- IBM-compatible laptop 10–11
- mouse 11
- power cord 16
- video player 14–15

connector panel
- audio out 9

contrast, adjusting 25
Controls menu 30

Controls menu options
- Auto Source Select 31
- Ceiling 30
- Default Source 31
- Display Messages 31
- Display Startup Screen 32
- Plug and Play 31
- Rear Projection 31
- Standby Time 30
- Video Standard 30

D

Default Source 31
Display menu 25
Display menu options
- Blank Screen 26
- Brightness 25
- Color 26
- Contrast 25
- Reset All 26
- Tint 25

Display Messages 31
Display Startup Screen 32
displaying
- startup screen 32
- status messages 31

displaying on-screen menus 22

E

extension cable 48

F

fuzzy lines 29

I

IBM-compatible computers
- compatibility 2
- connecting 10–13

icons
- on CableWizard 8
- on the projector 9

image
- adjusting 16, 19
- centering 29
- colors don't match computer's 43
- focusing 21
- fuzzy lines 29
- has lines or spots 42
- not centered 40
- not displayed 40
- out of focus 42
- quality 40–43
- resolution 1
- reversed 30, 31, 42
- size 7, 55
- streaked 42
- too wide or too narrow 41
- zooming 21

Image menu 28
Image menu options
- Auto Image 28
- Auto Resize 28
- Horiz. Position 29
- Manual Sync 28
- Manual Tracking 29
- Vert. Position 29

K

Kensington lock 39, 48

L
lamp
ordering 47
replacing 35
turns off unexpectedly 43
lamp hour counter 33
Language menu 32
language, selecting for menus 32
laptop computers
activation sequence to allow secondary display 49
connecting IBM-compatible 10
lens
cap 47
cleaning 35
LP425z / 435z
cases 47, 48
ceiling mounted 30
project from behind the screen 30, 31
setting up 7
specifications 45
turning off 17
turning on 16

M
Macintosh computers
compatibility 2
Menu button 24
menus. See on-screen menus
monitor, projected colors don't match 43
mouse, connecting 10

N
NTSC video 30

O
on-screen menus
Audio menu 27
changing language of 32
Controls menu 30
Display menu 25
displaying 24
Image menu 28
Language menu 32
making changes to menu functions 24
Status menu 33

P
PAL video 25, 30
Plug and Play 31
power cord
connecting 16
ordering 47
power switch 16, 17
power up sequence 16, 41
project from behind the screen 30, 31

R
rear projection 31
remote control
replacing the batteries 38
using 19, 22
replacing projection lamp module 35
re-positioning the image on the screen 29
resetting adjustments 26
resolution 1

S

safety guidelines iii
SECAM video 25, 30
security feature 39
SimulScan, using with PowerBooks 54
Source button 22
specifications 45
Standby button 23
Standby Time 30
startup screen 32
Status menu 33
S-video
    connecting 14
    ordering cable 48

T

Technical Support
    in Asia 5
    in Europe 5
    in USA 5
    information to have on hand
        before you call 43
temperature limits 45
test pattern 40
text not visible 40
tint, adjusting 25
treble, adjusting 27
troubleshooting 40
turning off the projector 17
turning on the projector 16

U

USB mouse 11

V

vertical lines displayed 29, 42
video 25
video mirroring on a PowerBook 54
video standards 30
Volume buttons 23
volume, adjusting 23, 27

W

warranty 48

Z

zooming the image 21