myprojectorlamps.com

The most trusted, dependable name in projector lamp sales.

http://www.myprojectorlamps.com

http://www.myprojectorlamps.ca

http://www.myprojectorlamps.eu

The following projector manual has not been modified or altered in any way.

IBM M400 PROJECTOR

User's Guide

IBM M400 PROJECTOR

User's Guide

Note: Before using this information and the product it supports, read the information in Appendix D, “Service and Support,” on page D-1and Appendix E, “IBM Statement of Limited Warranty - Z125-4753-07 - 11/2002,” on page E-1

First Edition (May 2004)

© Copyright International Business Machines Corporation 2004. All rights reserved.
US Government Users Restricted Rights – Use, duplication or disclosure restricted by GSA ADP Schedule Contract with IBM Corp.

Contents

Safety information v

General safety guidelines. vii
Service vii
Power cords and power adapters vii
Extension cords and related devices viii
Plugs and outlets viii
Batteries viii
Heat and product ventilation ix
CD and DVD drive safety. ix

Registering your option. xi

Chapter 1. Product description 1-1
Packing checklist 1-1
Projector features 1-4

Chapter 2. Setting up the projector . . 2-1
Starting and shutting down the projector 2-1
Positioning the projector 2-2
Adjusting the projector level and height 2-3
Adjusting the image 2-4
Image resolution 2-5
Adjusting the volume. 2-5

Chapter 3. Connecting devices to the projector 3-1
Connecting devices 3-1

Chapter 4. Using the projector features 4-1
Using the remote control. 4-1
Inserting the remote control batteries 4-2
Operating range 4-3
Projector and remote control buttons. 4-3

Chapter 5. On-Screen Display menu controls 5-1
Navigating the OSD 5-1
Image menu 5-1
Color menu 5-2
View menu 5-4
Setup menu 5-5
Option menu 5-6
Information menu 5-7
Sub Menus 5-8
White Balance 5-8
Input format 5-10
Language 5-11
Zoom. 5-11
Panning 5-11
Lamp Timer reset. 5-11
Factory default 5-12
Hot Keys 5-12
Quick menu 5-13

Appendix A. Maintenance A-1
Cleaning the lens A-1
Replacing the projector lamp A-1
Resetting the lamp A-2
Using the security slot A-3

Appendix B. Troubleshooting B-1
Projector LEDs B-3
Thermal protector B-4

Appendix C. Specifications C-1

Appendix D. Service and Support. . . D-1
Online technical support D-1
Telephone technical support D-1

Appendix E. IBM Statement of Limited Warranty - Z125-4753-07 - 11/2002. . . E-1
Part 2 - Country-unique Terms E-4
Part 3 - Warranty Information E-15

Appendix F. Notices. F-1
Trademarks F-2
Electronic emission notices F-2
Federal Communications Commission (FCC) statement F-2

© Copyright IBM Corp. 2004

Safety information

Before installing this product, read the Safety Information.

مج، يجب قراءة دات السلامة

Antes de instalar este produto, leia as Informações de Segurança.

在安装本产品之前，请仔细阅读 Safety Information
(安全信息)。

Prije instalacije ovog produkta obavezno pročitajte Sigurnosne Upute.

Před instalací tohoto produktu si přečtěte příručku bezpečnostních instrukcí.

Læs sikkerhedsforskrifterne, før du installerer dette produkt.

Ennen kuin asennat tämän tuotteen, lue turvaohjeet kohdasta Safety Information.

Avant d'installer ce produit, lisez les consignes de sécurité.

Vor der Installation dieses Produkts die Sicherheitshinweise lesen.

Πριν εγκαταστήσετε το προϊόν αυτό, διαβάστε τις πληροφορίες ασφάλειας
(safety information).

לפני שתתקינו מוצר זה, קראו את הוראות הבטיחות.

A termék telepítése előtt olvassa el a Biztonsági előírásokat!

Prima di installare questo prodotto, leggere le Informazioni sulla Sicurezza.

製品の設置の前に、安全情報をお読みください。

본 제품을 설치하기 전에 안전 정보를 읽으십시오.

Пред да се инсталира овој продукт, прочитајте информацијата за безбедност.

Lees voordat u dit product installeert eerst de veiligheidsvoorschriften.

Les sikkerhetsinformasjonen (Safety Information) før du installerer dette produktet.

Przed zainstalowaniem tego produktu, należy zapoznać się
z książką "Informacje dotyczące bezpieczeństwa" (Safety Information).

Antes de instalar este produto, leia as Informações sobre Segurança.

Перед установкой продукта прочтите инструкции по
технике безопасности.

Pred inštaláciou tohto produktu si prečítajte bezpečnostné informácie.

Pred namestitvijo tega proizvoda preberite Varnostne informacije.

Antes de instalar este producto lea la información de seguridad.

© Copyright IBM Corp. 2004

Läs säkerhetsinformationen innan du installerar den här produkten.

安裝本產品之前，請先閱讀「安全資訊」。

General safety guidelines

Always observe the following precautions to reduce the risk of injury and property damage.

Service

Do not attempt to service a product yourself unless instructed to do so by the IBM Support Center. Use only an IBM authorized service provider who is approved to repair your particular product.

Note: Some parts can be upgraded or replaced by the customer. These parts are referred to as Customer Replaceable Units, or CRUs. IBM expressly identifies CRUs as such, and provides documentation with instructions when it is appropriate for customers to replace those parts. You must closely follow all instructions when performing such replacements. Always make sure that the power is turned off and that the product is unplugged from any power source before you attempt the replacement. If you have any questions or concerns, contact the IBM Support Center.

Power cords and power adapters

Use only the power cords and power adapters supplied by the product manufacturer.

Never wrap a power cord around the power adapter or other object. Doing so can stress the cord in ways that can cause the cord to fray, crack or crimp. This can present a safety hazard.

Always route power cords so that they will not be walked on, tripped over, or pinched by objects.

Protect the cord and power adapters from liquids. For instance, do not leave your cord or power adapter near sinks, tubs, toilets, or on floors that are cleaned with liquid cleansers. Liquids can cause a short circuit, particularly if the cord or power adapter has been stressed by misuse. Liquids can also cause gradual corrosion of the power cord terminals and/or the connector terminals on the adapter which can eventually result in overheating.

Always connect power cords and signal cables in the correct order and ensure that all power cord connectors are securely and completely plugged into receptacles.

Do not use any power adapter that shows corrosion at the ac input pins and/or shows signs of overheating (such as deformed plastic) at the ac input or anywhere on the power adapter.

Do not use any power cords where the electrical contacts on either end show signs of corrosion or overheating or where the power cord appears to have been damaged in any way.

© Copyright IBM Corp. 2004

Extension cords and related devices

Ensure that extension cords, surge protectors, uninterruptible power supplies, and power strips that you use are rated to handle the electrical requirements of the product. Never overload these devices. If power strips are used, the load should not exceed the power strip input rating. Consult an electrician for more information if you have questions about power loads, power requirements, and input ratings.

Plugs and outlets

If a receptacle (power outlet) that you intend to use with your computer equipment appears to be damaged or corroded, do not use the outlet until it is replaced by a qualified electrician.

Do not bend or modify the plug. If the plug is damaged, contact the manufacturer to obtain a replacement.

Some products are equipped with a three-pronged plug. This plug fits only into a grounded electrical outlet. This is a safety feature. Do not defeat this safety feature by trying to insert it into a non-grounded outlet. If you cannot insert the plug into the outlet, contact an electrician for an approved outlet adapter or to replace the outlet with one that enables this safety feature. Never overload an electrical outlet. The overall system load should not exceed 80 percent of the branch circuit rating. Consult an electrician for more information if you have questions about power loads and branch circuit ratings.

Be sure that the power outlet you are using is properly wired, easily accessible, and located close to the equipment. Do not fully extend power cords in a way that will stress the cords.

Connect and disconnect the equipment from the electrical outlet carefully

Batteries

All IBM personal computers contain a non-rechargeable coin cell battery to provide power to the system clock. In addition many mobile products such as Thinkpad notebook PCs utilize a rechargeable battery pack to provide system power when in portable mode. Batteries supplied by IBM for use with your product have been tested for compatibility and should only be replaced with IBM approved parts.

Never attempt to open or service any battery. Do not crush, puncture, or incinerate batteries or short circuit the metal contacts. Do not expose the battery to water or other liquids. Only recharge the battery pack strictly according to instructions included in the product documentation.

Battery abuse or mishandling can cause the battery to overheat, which can cause gasses or flame to “vent” from the battery pack or coin cell. If your battery is damaged, or if you notice any discharge from your battery or the buildup of foreign materials on the battery leads, stop using the battery and obtain a replacement from the battery manufacturer.

Batteries can degrade when they are left unused for long periods of time. For some rechargeable batteries (particularly Lithium Ion batteries), leaving a battery unused in a discharged state could increase the risk of a battery short circuit, which could

shorten the life of the battery and can also pose a safety hazard. Do not let rechargeable Lithium-Ion batteries completely discharge or store these batteries in a discharged state.

Heat and product ventilation

Computers generate heat when turned on and when batteries are charging. Notebook PCs can generate a significant amount of heat due to their compact size. Always follow these basic precautions:

- Do not leave the base of your computer in contact with your lap or any part of your body for an extended period when the computer is functioning or when the battery is charging. Your computer produces some heat during normal operation. Extended contact with the body could cause discomfort or, potentially, a skin burn.
- Do not operate your computer or charge the battery near flammable materials or in explosive environments.
- Ventilation slots, fans and/or heat sinks are provided with the product for safety, comfort, and reliable operation. These features might inadvertently become blocked by placing the product on a bed, sofa, carpet, or other flexible surface. Never block, cover or disable these features.

CD and DVD drive safety

CD and DVD drives spin discs at a high speed. If a CD or DVD is cracked or otherwise physically damaged, it is possible for the disc to break apart or even shatter when the CD drive is in use. To protect against possible injury due to this situation, and to reduce the risk of damage to your machine, do the following:

- Always store CD/DVD discs in their original packaging
- Always store CD/DVD discs out of direct sunlight and away from direct heat sources
- Remove CD/DVD discs from the computer when not in use
- Do not bend or flex CD/DVD discs, or force them into the computer or their packaging
- Check CD/DVD discs for cracks before each use. Do not use cracked or damaged discs

Registering your option

Thank you for purchasing this IBM® product. Please take a few moments to register your product and provide us with information that will help IBM to better serve you in the future. Your feedback is valuable to us in developing products and services that are important to you, as well as in developing better ways to communicate with you. Register your option on the IBM Web site at

http://www.ibm.com/pc/register/

IBM will send you information and updates on your registered product unless you indicate on the Web site questionnaire that you do not want to receive further information.

© Copyright IBM Corp. 2004

Chapter 1. Product description

The IBM M400 projector can be used for both business presentations and home entertainment and is easy to connect, use, and maintain. Some main features of this projector are:

- Extremely powerful, lightweight, and portable at 2.4 lbs (1.1kg).
- Sharp and clear images with a high contrast ratio of 1800:1.
- Beautiful reproduction of high-quality images from DVD.
- Digital technology which corrects the vertical keystone distortion of the projector pictures.

Packing checklist

In addition to this user's guide, your option package contains the following:

© Copyright IBM Corp. 2004

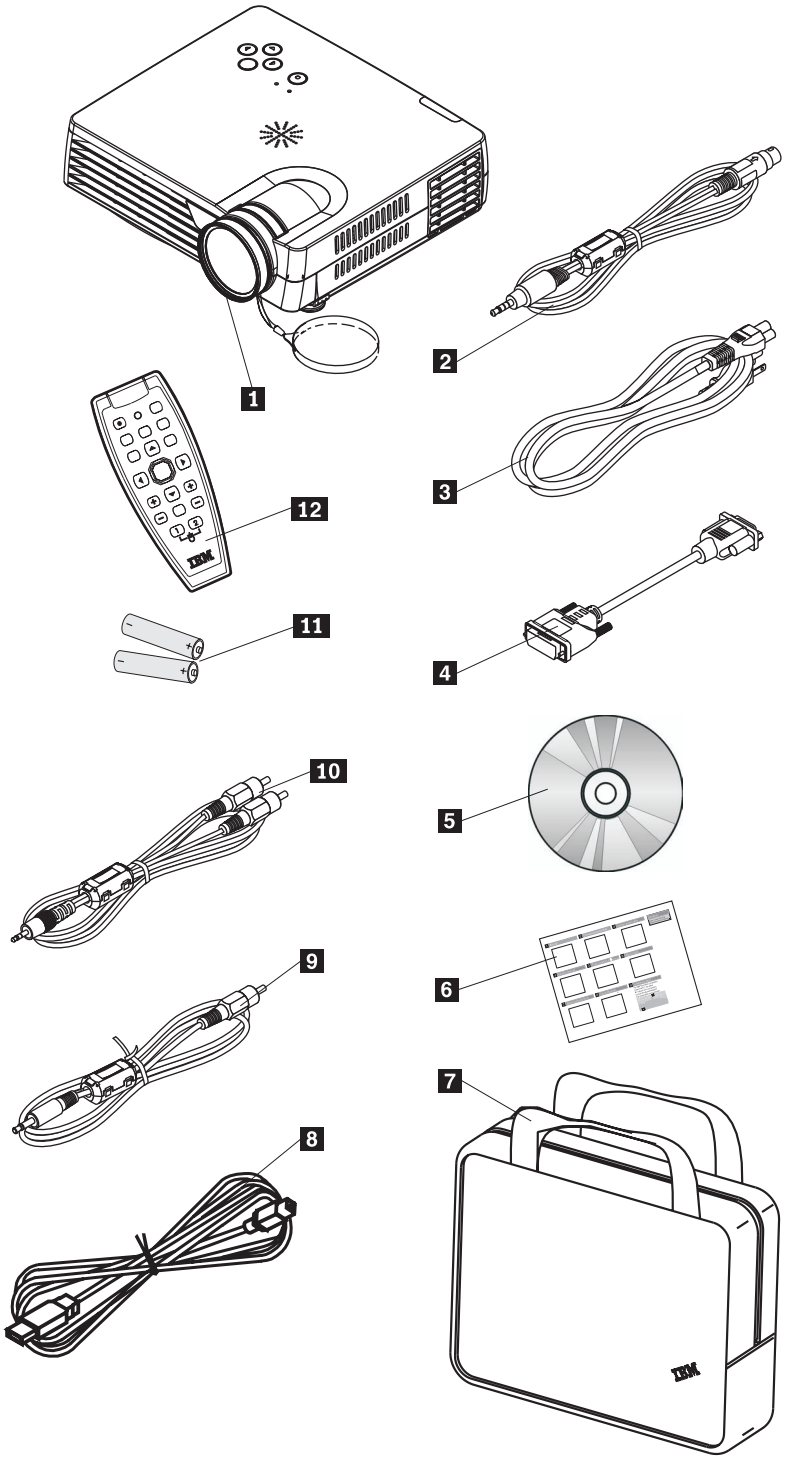

Figure 1-1. Standard Accessories

1. Projector with lens cap
2. S-video cable
3. Power cord
4. Computer cable (DVI-DB15)
5. User's guide (and installation) CD

6 Multi-language quick start guide

7 Carrying case

8 USB cable

9 Video cable (Mini Jack- RCA)

10 Audio cable (Mini Jack- RCA)

11 Batteries

12 Remote control

If any of the items listed above are missing or damaged, contact your place of purchase.

Note: Be sure to retain your proof of purchase; it will be required to receive warranty service.

For information on optional accessories for your projector, go to the http://www.ibm.com.

Important:

- Avoid using the projector in dusty environments
- Leave the power cable plugged in (for 2-5 minutes) until the projector returns to room temperature before placing the projector inside the soft case. Placing the projector into the case too soon after switching off the power could cause the projector to overheat and will shorten lamp life.
- Be sure to attach the lens cap and place the projector into the soft case with the lens facing upward to avoid damaging the lens.

Projector features

The figures below show the different angles and features of the projector.

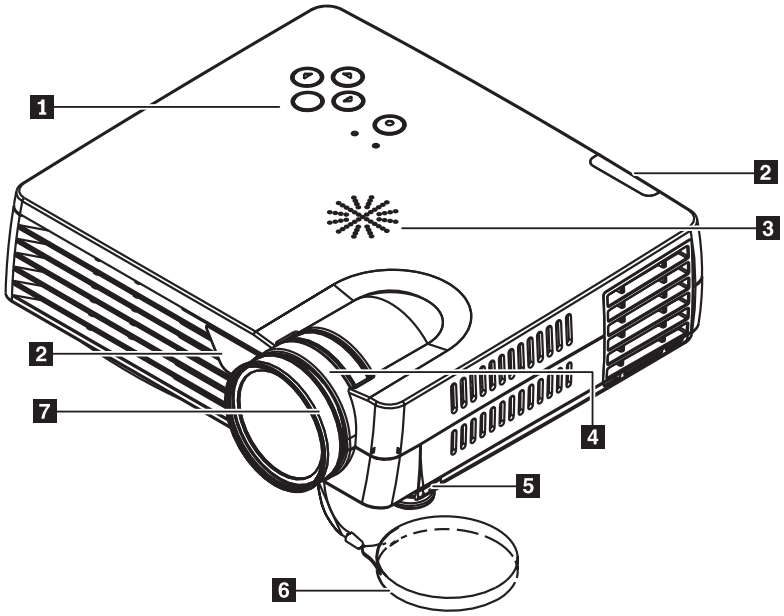

Figure 1-2. Front angle of projector

1. Keypad
2. Remote control receiver (IR)
3. Speaker
4. Zoom
5. Elevator foot/leveling foot
6. Lens cap
7. Focus ring

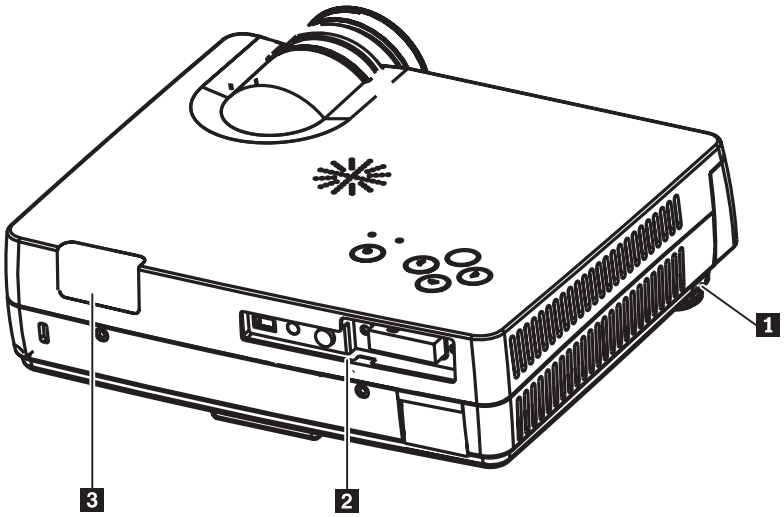

Figure 1-3. Back angle of projector

1. Elevator foot/leveling foot
2. Connectors
3. Remote control receiver (IR)

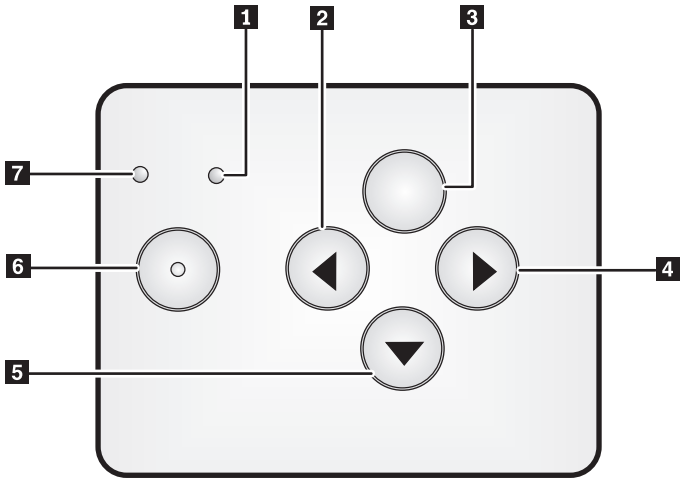

Figure 1-4. Keypad on projector

1. Power LED
2. Source/Left button
3. Menu button
4. Auto/Right button
5. Quick Menu/Down button
6. Power button
7. Status LED

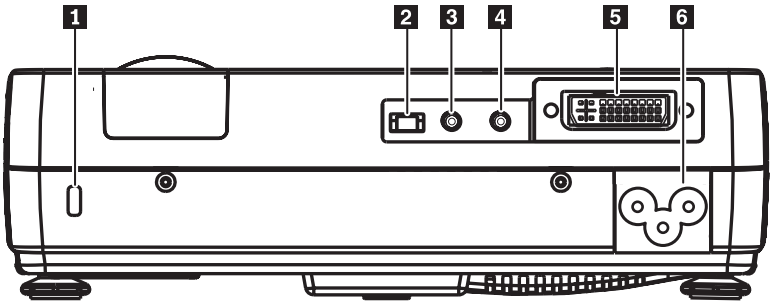

Figure 1-5. Connectors on back of projector

1. Security slot
2. USB slot
3. Audio
4. Video mini-jack
5. DVI-I
6. AC socket

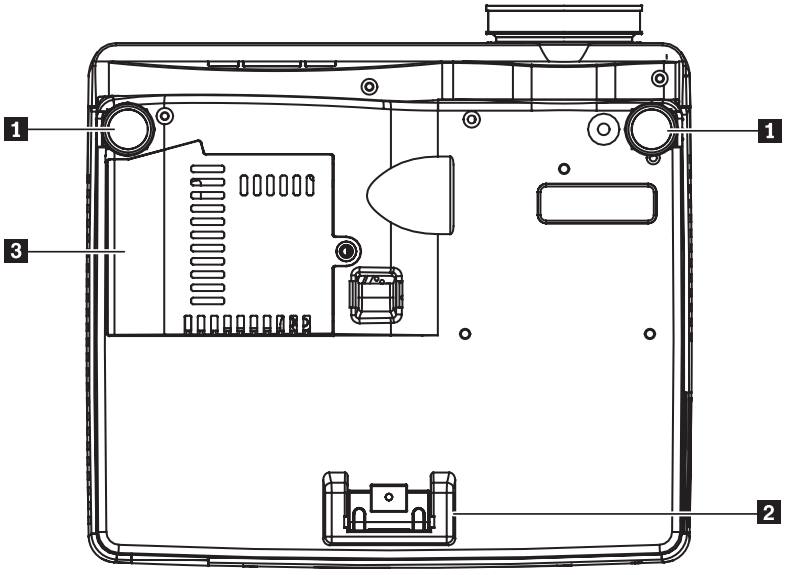

Figure 1-6. Bottom view of projector

1. Front adjusters
2. Rear adjuster
3. Projection lamp cover

Chapter 2. Setting up the projector

This chapter provides information on positioning the projector, connecting a computer source, using the projector with Microsoft Windows, and displaying and adjusting a computer source image.

Starting and shutting down the projector

Please follow the steps below to start your projector, and to shut off the projector.

Attention: Before moving the projector, be sure to power down the projector normally and disconnect the projector from the main power source.

1. Connect the power cord to the projector as shown in Figure 2-1. Connect the other end to a wall outlet. The Power LED turns on.

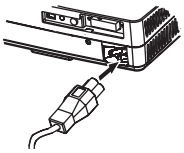

Figure 2-1. Connecting the power cable

2. Remove the lens cover.
3. Attach input devices.
4. Turn on the connected devices.
5. Ensure the Power LED is on a steady (not flashing) amber and then press the **Power** button to turn on the projector. The projector splash screen displays and connected devices are detected.

   Attention: Do not look directly into the projection lens when the lamp is turned on. The bright light might harm your eyes.
6. Use the appropriate appliance cable to connect to a video device.
7. To turn off the projector, press the **Power** button. The projector prepares for shut-down and a "Power off" message appears, as shown below. The projector turns off automatically within 5 seconds.

   Note: This operation can be cancelled by pressing a button other than the **Power** button. Pressing the **Power** button again will switch off power.

© Copyright IBM Corp. 2004

Note: Leave the power cable plugged in for at least 2-5 minutes until the projector returns to room temperature before placing the projector inside the soft case. Placing the projector into the case too soon after switching off the power could cause the projector to overheat.

Attention: Before moving the projector, be sure to power down the projector normally and disconnect the projector from the main power source.

Positioning the projector

To determine where to position the projector, consider the size and shape of your screen, the location of your power outlets, and the distance between the projector and the rest of your equipment. Following are some general guidelines:

- Position the projector on a flat surface at a right angle to the screen. The projector must be at least 1.5 m (4.9 ft) from the projection screen.
- Position the projector within 2.7 m (9 ft) of your power source and within 1.8 m (6 ft) of your video device (unless you purchase extension cables). To ensure adequate cable access, do not place the projector within .15 m (6 in.) of a wall or other object.
- Position the projector the desired distance from the screen. The distance from the lens of the projector to the screen, the zoom setting, and the video format determine the size of the projected image.

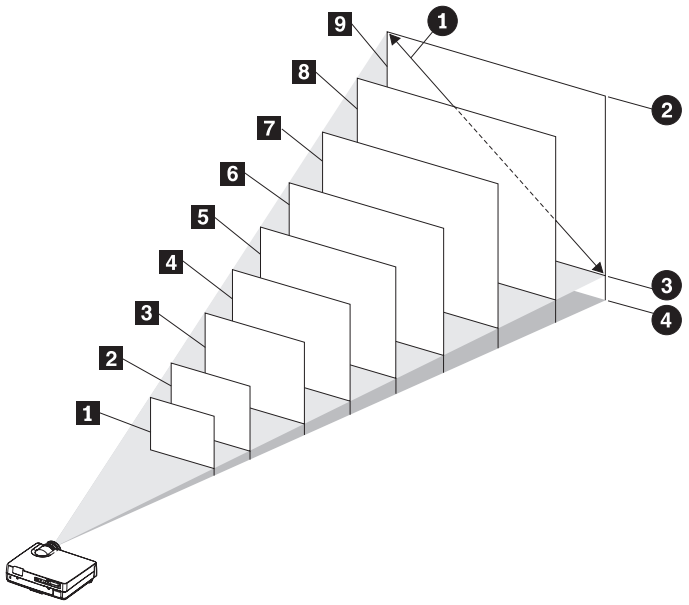

Figure 2-2.

Table 2-1.

Zoom lens operation range **(m/ft)**	**Diagonal screen size** ❶ **(m/in.)**	**Image Width** ❷ **(m/ft)**	**Image height** ❸ **(m/ft)**	**Distance from center of lens to bottom of image** ❹ **(m/ft)**
1 - to 1.20/- to 3.94	0.66/26	0.53/1.74	0.40/1.31	0.07/0.23
2 1.54 to 1.85/5.05 to 6.07	1.02/40	0.81/2.66	0.61/2	0.11/0.36
3 2.33 to 2.80/7.64 to 9.19	1.52/60	1.22/4	0.91/2.99	0.16/0.52
4 3.12 to 3.75/10.24 to 12.30	2.03/80	1.63/5.35	1.22/4	0.21/0.69
5 3.91 to 4.70/12.83 to 15.42	2.54/100	2.03/6.66	1.52/4.99	0.26/0.85
6 4.70 to 5.64/15.42 to 18.50	3.05/120	2.44/8	1.83/6	0.31/1.02
7 5.89 to 7.07/19.32 to 23.20	3.81/150	3.05/10	2.29/7.51	0.39/1.28
8 7.04 to 8.45/23.10 to 27.72	4.57/180	3.55/12	2.74/8.99	0.47/1.54
9 7.85 to 9.44/25.79 to 30.97	5.08/200	4.05/13.32	3.05/10	0.52/1.71

Adjusting the projector level and height

To adjust the projector level and height, complete the following procedure:

1. To raise the height of the projector, lift the projector and press the height-adjuster buttons. The elevator foot drops down.
2. To make minor adjustments to the height, rotate the elevator foot.
3. To lower the level of the projector, press the height-adjuster button and press down on the top of the projector.

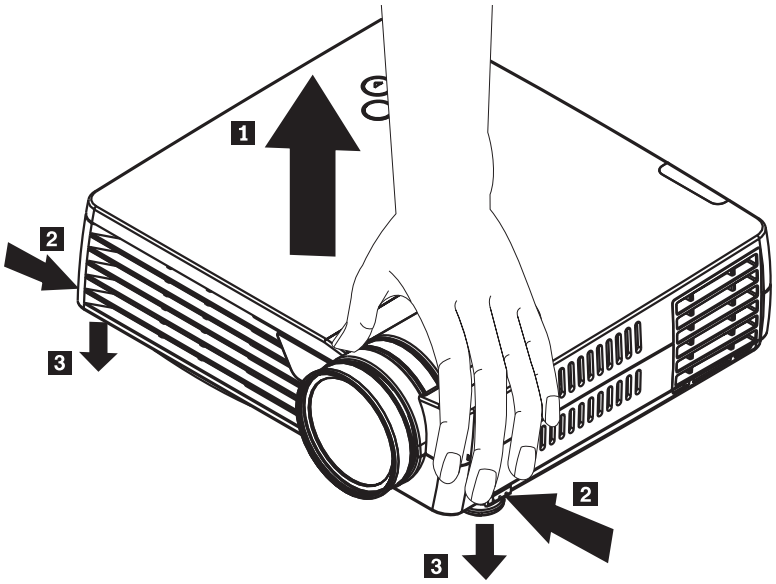

Note:

- The projector table or stand should be level and sturdy.
- Position the projector so that it is perpendicular to the screen.
- Be sure cables are *not* in a place where they can cause the projector to be knocked over.

Adjusting the image

To adjust the zoom, focus, and keystone for the image, complete the following steps:

1. Twist the rings on the projector to adjust the zoom and focus, as shown below.

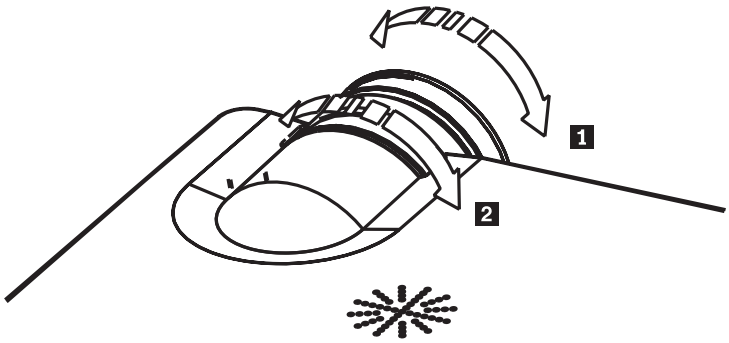

2. Use the **Keystone** buttons (on the remote only) to correct image-trapezoid (wider top or bottom) effect. The Keystone buttons on the remote are shown below.

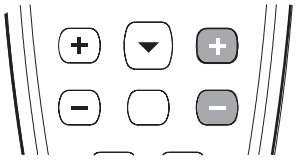

The keystone control appears on the OSD, as shown.

To adjust the keystone on the projector, press Quick Menu and select the keystone submenu; then use the left/right buttons to adjust the keystone.

Image resolution

The XGA resolution of the projected image is 1024 x 768 (XGA). The projector is compatible with screen resolutions up to 1280 x 1024 (SXGA). If your computer screen resolution is higher than 1280 x 1024 (SXGA), reset it to a lower resolution before you connect the projector.

Note: The image automatically expands 640 x 480 (VGA) and 800 x 600 (SVGA) images to 1024 x 768 (XGA).

Adjusting the volume

To adjust the volume, please follow the steps below:

1. Press the **Volume +/-** buttons (shown below) on the projector or the remote control. The volume control appears on the OSD.

2. Use the **Volume +/-** buttons to adjust the level. The remote volume control buttons are shown below.

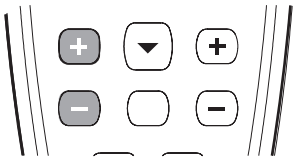

3. Press the **Mute** button (on the remote control only) to turn off the volume. Press the Mute button again to turn off mute. Shown below is the OSD when Mute is activated.

Chapter 3. Connecting devices to the projector

This chapter provides information on connecting devices to the M400 projector.

Connecting devices

Computers and video devices can be connected to the projector at the same time. Check the user's manual of the connecting device to confirm that it has the appropriate output connector.

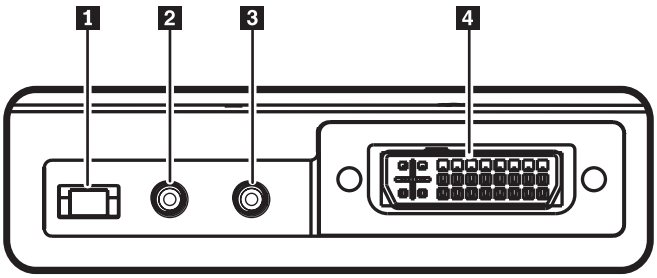

1 USB slot
2 Audio
3 Video mini-jack
4 DVI-I

© Copyright IBM Corp. 2004

Chapter 4. Using the projector features

This chapter provides information on using the remote control, audio, keypad buttons, and other projector features.

Using the remote control

The remote uses two provided AAA batteries. They are easily installed by sliding the cover off the back of the remote, aligning the + and - ends of the batteries, sliding them into place, and then replacing the cover.

CAUTION:
To reduce the risk of injury to the eyes, do not look directly into the remote control laser light and do not point the laser light into anyone's eyes. The remote control is equipped with a Class II laser that emits radiation.

The figure below provides an illustration of the remote.

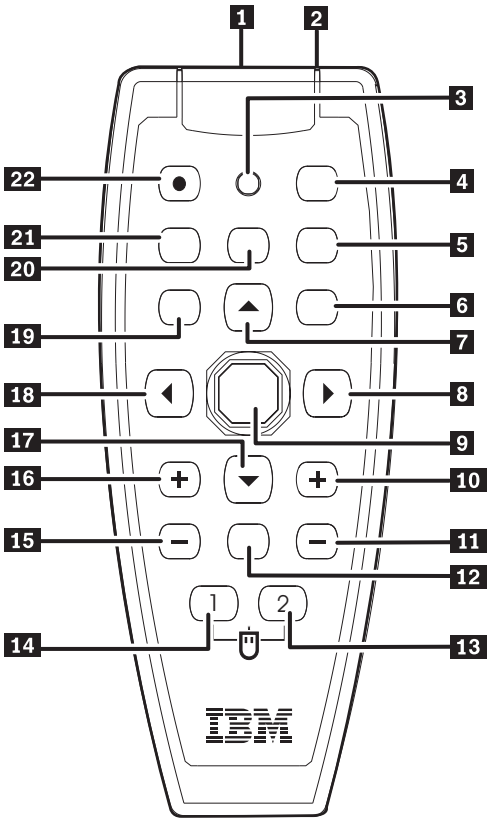

1 Laser
2 IR transmitter
3 Status LED
4 Auto
5 Blank
6 Enter
7 Up cursor
8 Right cursor
9 Cursor pad
10 Keystone top
11 Keystone bottom
12 Mute
13 Right mouse
14 Left mouse
15 Volume down
16 Volume up
17 Down cursor
18 Left cursor
19 Menu
20 Freeze
21 Source
22 Power

© Copyright IBM Corp. 2004

Inserting the remote control batteries

When using the remote control for the first time, install the batteries that were supplied. Follow the steps below for inserting new batteries into your remote control.

1. Remove the battery compartment cover by sliding the cover in the direction of the arrow, as shown.

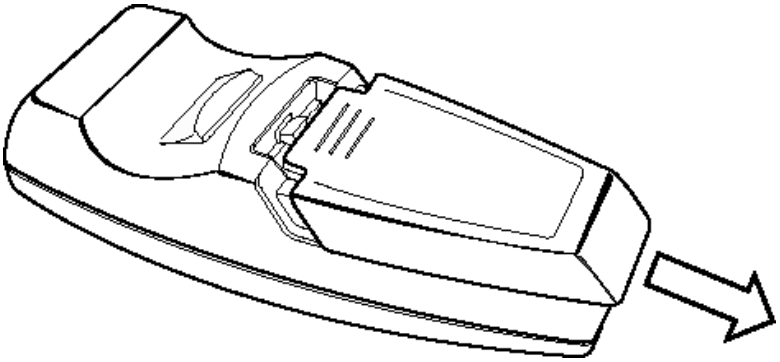

2. Insert the supplied batteries taking note of the polarity (+/-), as shown.

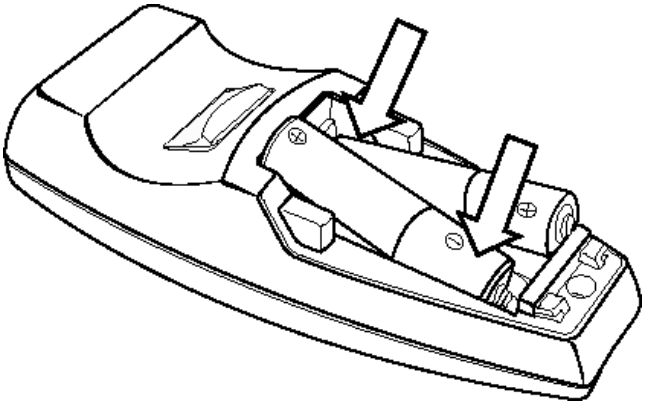

3. Replace the cover, as shown.

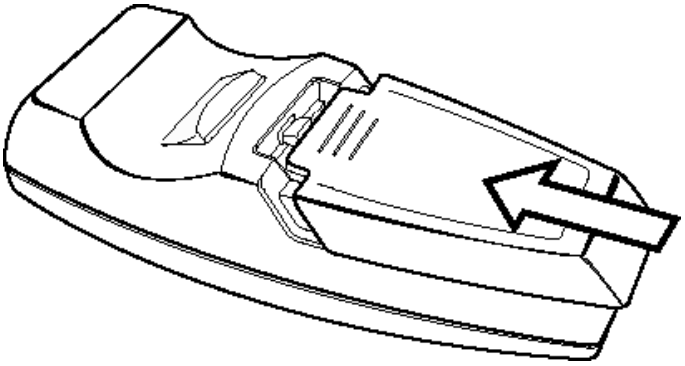

Note:

- Only use AAA alkaline batteries.
- Dispose of used batteries according to local government ordinance regulations.
- Remove the batteries when not using the remote for prolonged periods.

Operating range

This remote control uses infrared transmission to control the projector. It is not necessary to point the remote directly at the projector. Provided you are not holding the remote to the sides or the rear of the projector, the remote will function within a maximum radius of 7m (22ft) and 30° above or below the projector level. If the projector does not respond to the remote control, move a little closer.

Note: You can also point the remote at the projected image.

Projector and remote control buttons

The projector can be operated using the remote control or the buttons on the top of the projector. All operations can be carried out with the remote control. The figure below shows the corresponding buttons on the remote control and on the projector for OSD menu operation.

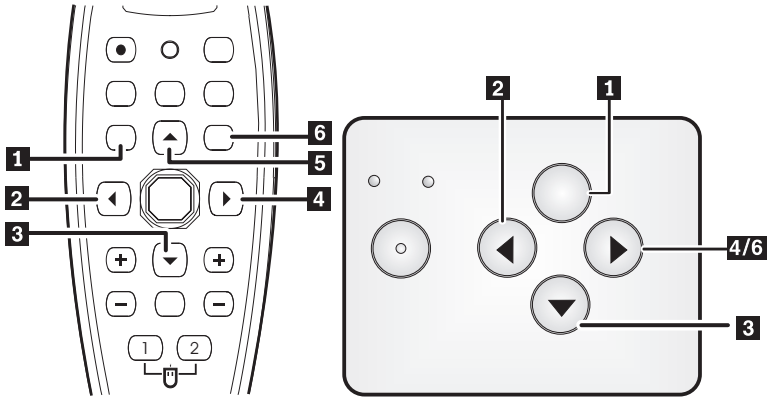

1 Menu
2 Source/Left button
3 Quick menu/Down button
4 Auto/Right button
5 Up button
6 Auto/Enter button

Chapter 5. On-Screen Display menu controls

This projector has an On-Screen Display (OSD) that lets you make image adjustments and change various settings.

Note: You must have a display on the screen in order to access the OSD.

Navigating the OSD

You can use the remote control or the buttons on the top of the projector to navigate and make changes to the OSD. The following sections show the menus in the OSD.

Image menu

The image menu can be found through the main menu. To access the Image menu, follow these steps:

1. Press the **Menu** button to open the main menu.
2. Press the cursor left/right button to move to the Image menu.
3. Press the cursor down button to move down in the Image menu. The Image menu is shown below.

The following table shows the options that you will see in the Image menu and the default.

Item	Description	Default
Brightness	Press the cursor left/right button to adjust the brightness. Range: -50 to 50	0

© Copyright IBM Corp. 2004

Item	Description	Default
Contrast	Press the cursor left/right button to adjust the contrast. Range: -50 to 50	0
Picture Adjustment	Press the cursor left/right button to adjust the A/D sampling number. Range: -50 to 50	0
Fine Picture	Press the cursor left/right button to adjust the A/D sampling clock. Range: -50 to 50	Auto-detected
H Position	Press the cursor left/right button to move the image left or right. Range: -50 to 50	0
V Position	Press the cursor left/right button to move the image up or down. Range: -50 to 50	0
Color	Press the cursor left/right button to adjust the video saturation. Range: -50 to 50	0
Tint	Press the cursor left/right button to adjust the video hue. Range: -50 to 50	0
Sharpness	Press the cursor left/right button to adjust the video sharpness. Range: -50 to 50	0
Cancel	Press the enter button to reset Brightness, Contrast, Picture Adjust, H Position, V Position, Color, Tint, and Sharpness to default values.	0

Color menu

To access the Color menu, follow the steps below:

1. Press the **Menu** button to open the main menu.
2. Press the cursor left/right button to move to the Color menu.

3. Press the cursor up/down button to move within the Color menu. The color menu is shown below.

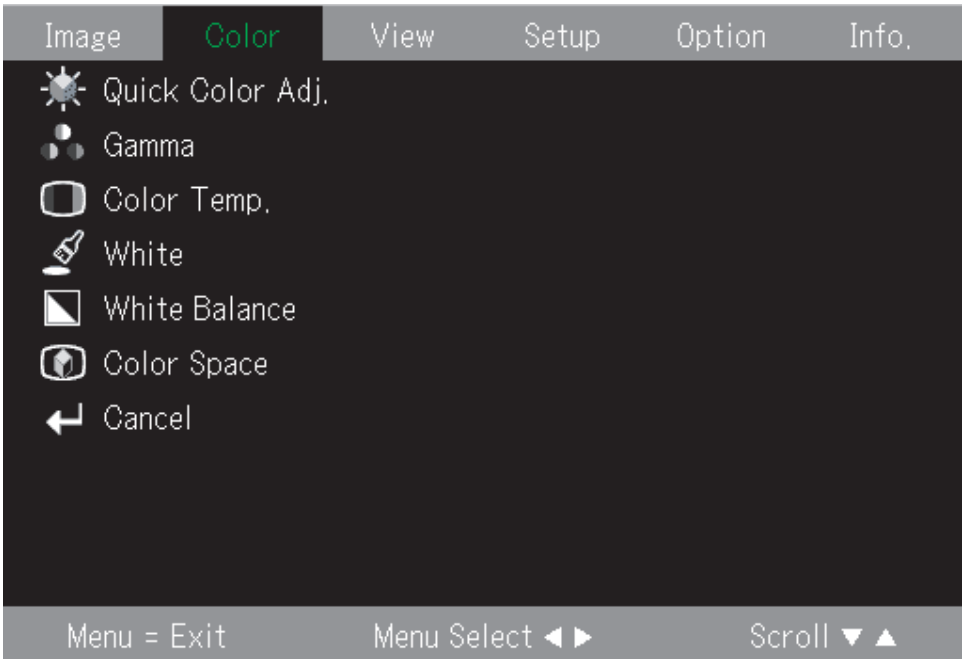

The following table shows the options that you will see in the Color menu and the default.

Item	Description	Default
Quick Color Adj.	Press the cursor left/right button to select different Color Adjust. Range: Standard/Color/Custom	Standard
Gamma	Press the cursor left/right button to select different Gamma Correction. Range: Normal/Natural/Real	Normal
Color Temperature	Press the cursor left/right button to select different color temperature. Range: Low/Middle/Normal/High	Normal
White	Press the cursor left/right button to select different white segment. Range: Low/Middle/High	RGB: High Video: Low
White Balance	Change White Balance Menu	N/A
Color Space	Press the cursor left/right button to select different color space. Range: BT.709/SMPTE240	BT.709
Cancel	Reset Quick Color Adj., Gamma, Color Temp., White, and Color Space to default value.	N/A

View menu

To access the View menu, follow the steps below:

1. Press the Menu button to open the main menu.
2. Press the cursor left/right button to move to the View menu.
3. Press the cursor up/down button to move up and down in the View menu. The View menu is shown below.

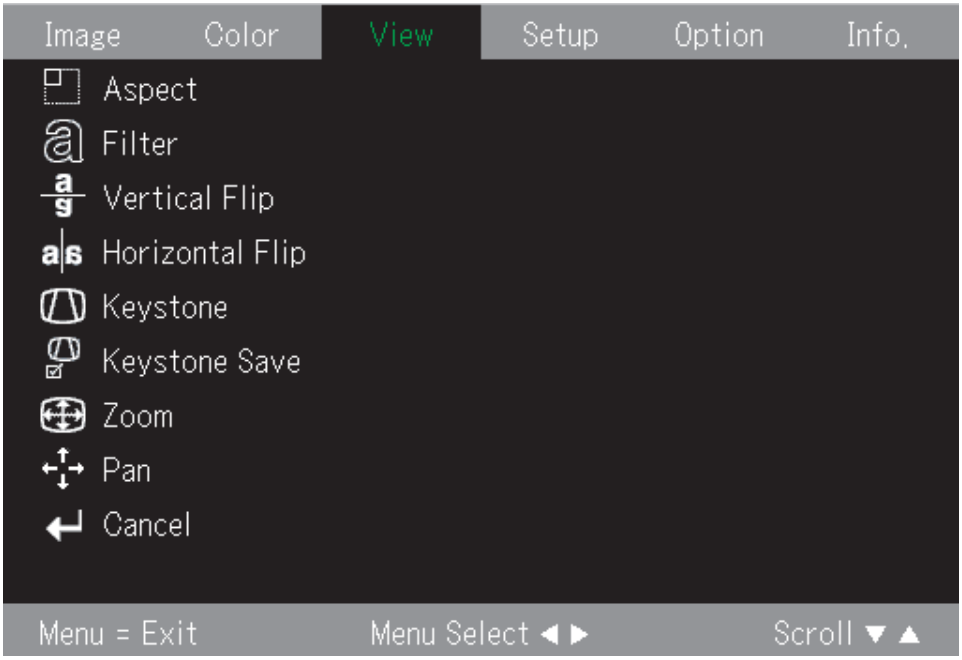

The following table shows the options that you will see in the View menu and the default.

Item	Description	Default
Aspect	Press the cursor left/right button to select different aspect ratio. RGB Range: Auto/Direct/Rear Video Range: Auto/Wide/Zoom	Auto
Filter	Press the cursor left/right button to select different scaling filter. Range: 1 to 5	3
Vertical Flip	Press the cursor left/right button to select different vertical flip. Range: Off/On	Off
Horizontal Flip	Press the cursor left/right button to select different horizontal flip. Range: Off/On	Off
Keystone	Press the cursor left/right button to adjust the display keystone. Range: -50 to 50	0

Item	Description	Default
Keystone Save	Press the cursor left/right button to select keystone save. Range: Off/On	On
Digital Zoom	Digital Zoom	N/A
Panning	Use the ↑,→,↓,← buttons to pan in the Digitally zoomed image.	N/A
Cancel	Reset Aspect, Filter, Vertical Flip, Horizontal Flip, Keystone, and Keystone Save to default values.	N/A

Setup menu

To access the View menu, follow the steps below:

1. Press the **Menu** button to open the main menu.
2. Press the left/right cursor to move to the Setup menu.
3. Press the cursor up/down button to move up and down in the Setup menu. The Setup menu is shown below.

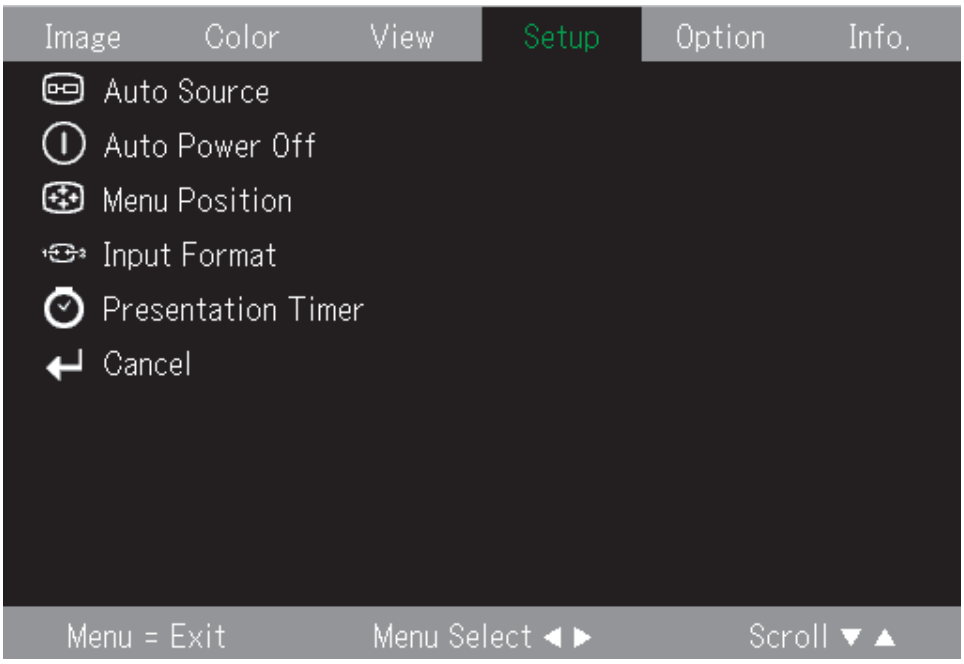

The following table shows the options that you will see in the Setup menu and the default.

Item	Description	Default
Auto Source	Press the cursor right/left button to select. This will automatically search all of the input ports. Range: On/Off	On

Item	Description	Default
Auto Power Off	Press the cursor right/left button to select. This will automatically turn off the lamp when there is no signal to the projector for 5 minutes. Range: On/Off	Off
Menu Position	Press the cursor left/right button to select different OSD locations. Range: Left/Top/Center/Right/Bottom	Center
Input Format	Change the input format menu.	Auto
Presentation Timer	Press the cursor left/right button to select the time for the presentation timer. Range: Off/10 min/20 min/30 min/40 min/50 min/60 min	Off
Cancel	Reset Auto Source, Auto Power off, Menu Position, and Presentation Timer to default values.	N/A

Option menu

To access the Option menu, follow the steps below:

1. Press the Menu button to open the main menu
2. Press the cursor left/right button to move to the Option menu.
3. Press the cursor up/down button to move up and down within the Option menu. The Option menu is shown below.

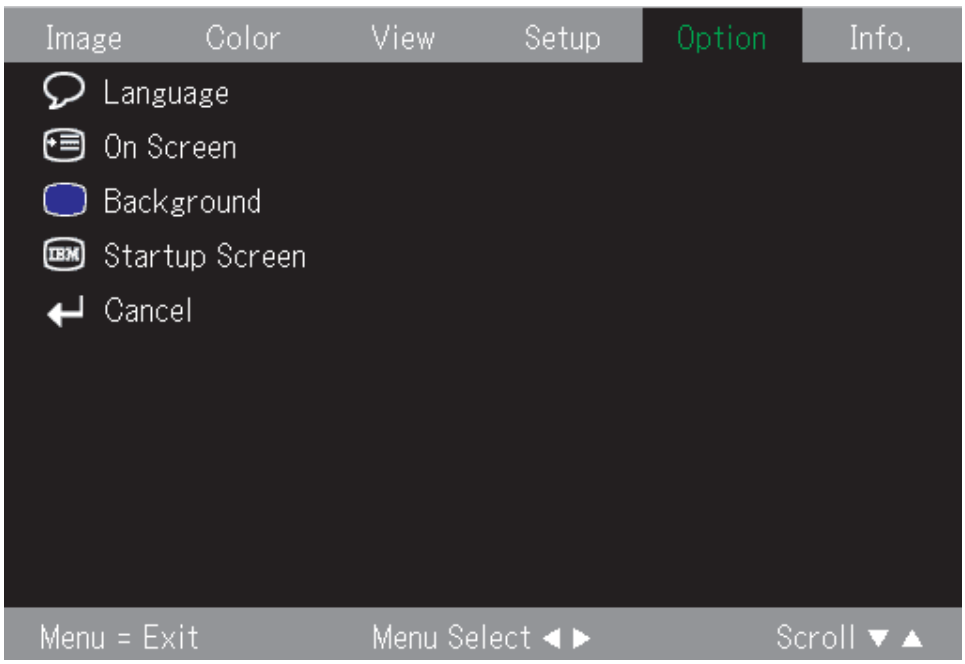

The following table shows the options that you will see in the Option menu and the default.

Item	Description	Default
Language	Change the Language Range: English/German/French/Italian/ Spanish/Swedish/Korean /Simplified Chinese/ Traditional Chinese/Japanese	English
On Screen	Press the cursor left/right button to select the on-screen menu. Range: On/Off	On
Background	Press the cursor left/right button to select background color. Range: Blue/Black	Blue
Startup Screen	Press the cursor left/right button to select the startup screen. Range: Logo/Blank	Logo
Cancel	Preset On Screen, Background, and Startup Screen to default values.	N/A

Information menu

To access the Information menu, follow the steps below:

1. Press the **Menu** button to open the main menu.
2. Press the cursor left/right button to move to the Info menu.

3. Press the cursor up/down button to move up and down in the Info menu. The Info menu is shown below.

The following table shows the options that you will see in the Info menu.

Item	Description
Factory Default	Change factory default message menu.
Lamp Timer Reset	Reset the lamp timer.
Resolution	Shows Resolution H/V format.
Frequency	Shows Frequency H/V information.
Lamp Timer	Shows lamp hours used information.
Version	Shows Firmware version information.

Sub Menus

This section describes the different sub menus in depth.

White Balance

White Balance is a menu for calibration purposes. Follow the steps below to use the White Balance menu.

1. Start by finding a black pattern source from the computer.

2. Press Enter to execute black adjustment.

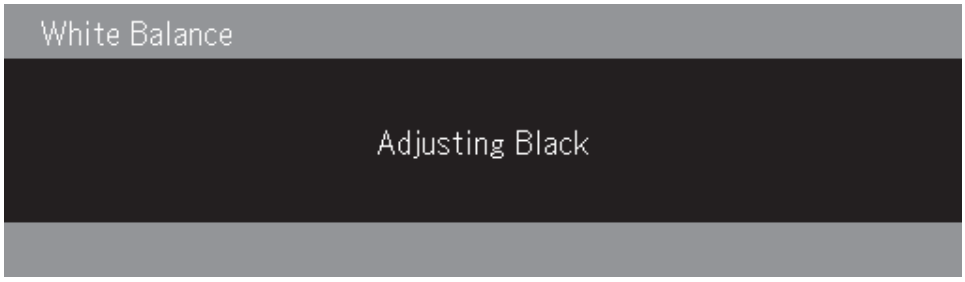

3. Next, find a white pattern source from the computer.

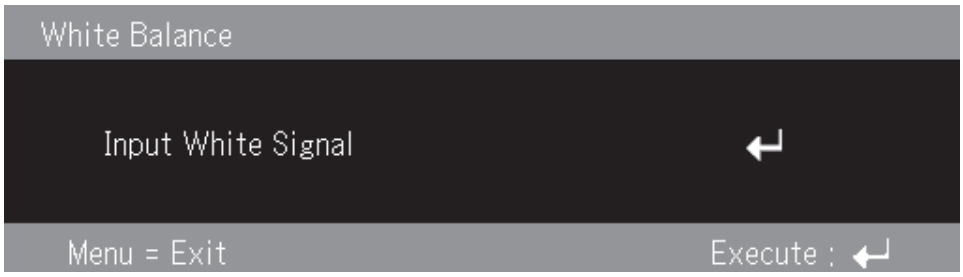

4. Press Enter to execute a white adjustment.

5. The scree will now show "White Balance Complete" if the adjustment process completes successfully.

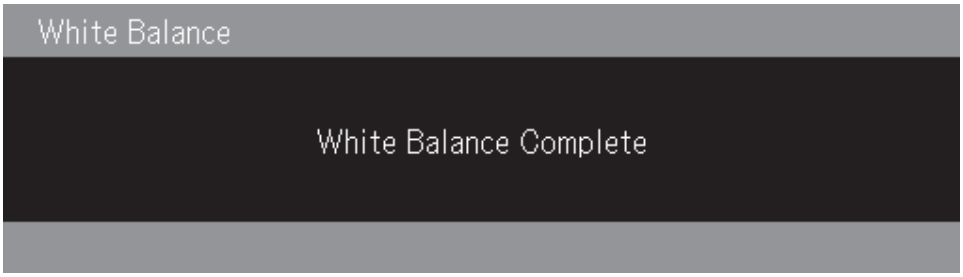

Input format

The image below shows the Input format menu.

The following table shows the options that you will see in the Input format menu and the default.

Item	Description	Default
Input Format PC mode	Press the up/down button to select the Input format. Range: Auto/RGB/Digital/Component	Auto
Input Format Video/S-Video mode	Press the cursor up/down button to select the Input format. Range: Auto/NTSC/PAL/SECAM/ NTSC4.43/PAL M/PAL N/PAL 60	Auto

The default for the Input format is Auto. You will see the following image when the projector is searching for the input video source.

Language

The image below shows the Language menu. The default language is English.

Zoom

Press the cursor up/down button to use Digital Zoom.

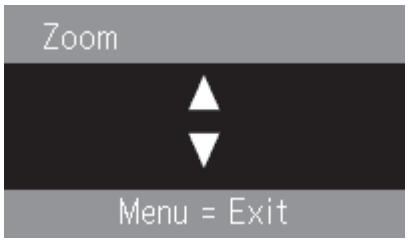

Panning

Use the ↑,→,↓,← buttons to pan in the Digitally zoomed image.

Lamp Timer reset

Press the **Enter** button to reset the Lamp Timer.

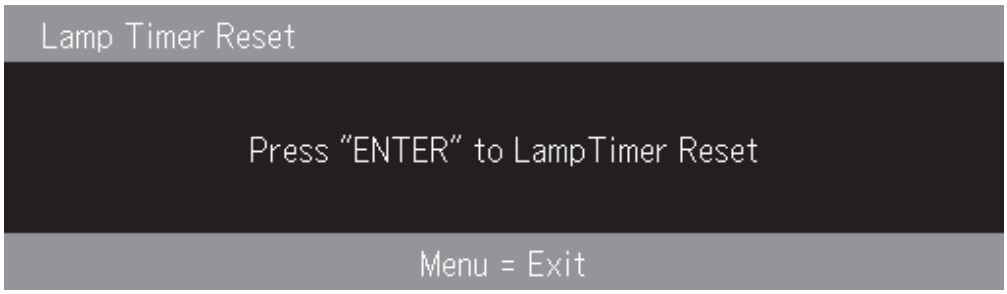

Factory default

Press the **Enter** button to restore default settings.

Hot Keys

This section shows the Hot Keys and describes their functions.

- **Power off**: Press the Power key to turn the projector off. Either wait for 5 seconds for the projector to automatically power off, or press the Power key again for immediate shut off. The image displayed when the projector is powering off is shown below.

- **Keystone**: Press the Keystone cursor +/- button (on the remote) to adjust the display keystone. The range is -50 to 50.

- **Volume**: Press the Volume cursor +/- button (on the remote) to adjust the volume. The range is 0 to 100.

- **Freeze**: Use the freeze key to freeze or unfreeze the image.

Quick menu

This section is a quick reference guide for the following menu items.

- **Brightness**: Press the cursor left/right button to adjust the display brightness. The range is -50 to 50.

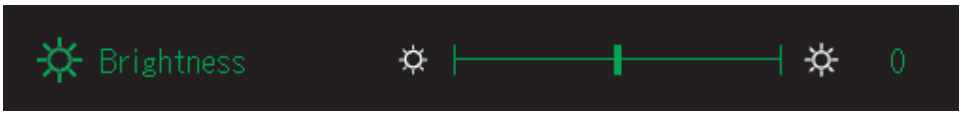

- **Contrast**: Press the cursor left/right button to adjust the display contrast. The range is -50 to 50.

- **Volume**: Press the cursor left/right button to adjust the volume. The range is 0 to 100.

- **Keystone**: Press the cursor left/right button to adjust the display keystone. The range is -50 to 50.

Appendix A. Maintenance

This chapter provides information on projector maintenance.

Cleaning the lens

To clean the lens, complete the following procedure:

1. Apply a non-abrasive camera lens cleaner to a soft, dry cloth.

   Note: Avoid using an excessive amount of cleaner, and do not apply the cleaner directly to the lens. Abrasive cleaners, solvents or other harsh chemicals might scratch the lens.

2. Lightly wipe the cleaning cloth over the lens in a circular motion. If you do not intend to use the projector immediately, replace the lens cap.

Replacing the projector lamp

The projector lamp should only be replaced with an IBM certified replacement part, which you can order from your business partner or go to www.ibm.com/pc.

To replace the projector lamp, complete the following procedure:

1. Turn off the projector, unplug the power cord, and allow the projector to cool for at least 1 hour.
2. Use a Phillips-head screwdriver to remove the screw from the lamp compartment cover as shown in 2 .
3. Remove the lamp compartment cover as shown in 3 .

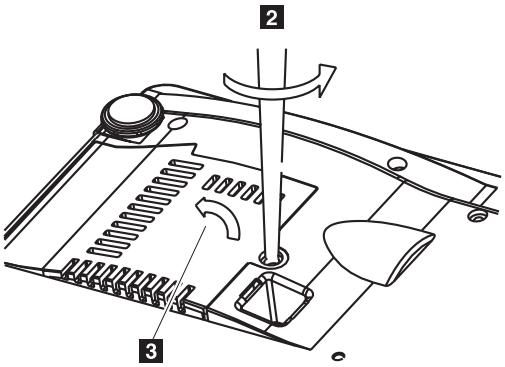

4. Remove the two screws from the lamp module as shown in 4 .

© Copyright IBM Corp. 2004

5. Lift the module handle up as shown in **5**.

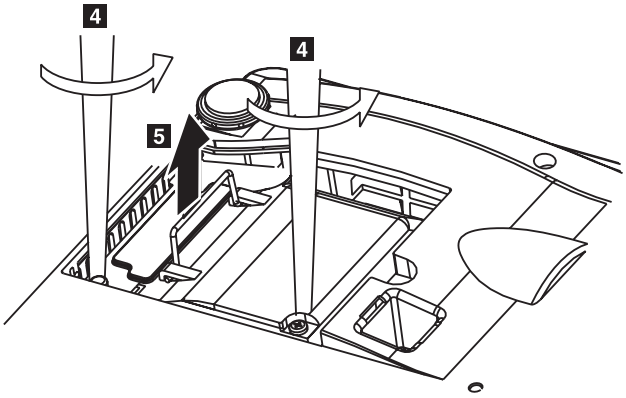

6. Pull firmly on the module handle to remove the lamp module as shown in **6**.

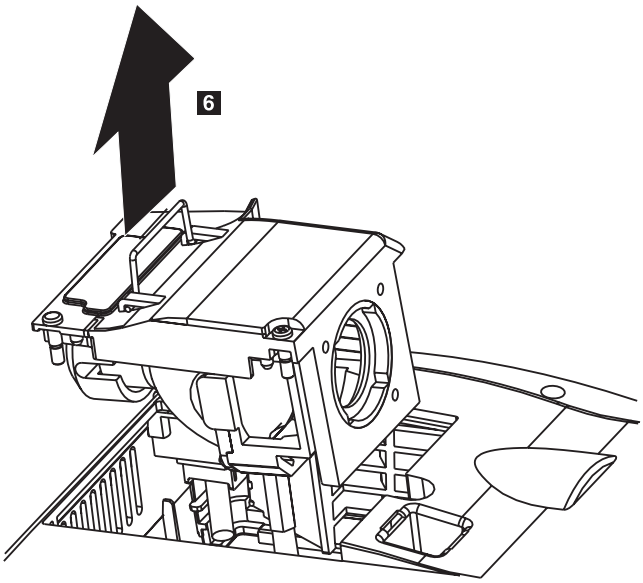

7. Reverse steps 1 through 5 to install the new lamp module.

Attention: This product contains a Metal Arc Lamp, which contains Mercury. Dispose of it as required by local ordinances and regulations.

The USA restricts or prohibits the disposal of some or all lamps containing mercury in the municipal waste stream. Please visit www.lamprecycle.org for more information on specific state disposal requirements and recycling facilities.

For users in Connecticut, please call Northeast Lamp Recycling toll-free at 1-888-657-5267 to place an order for the delivery of a kit that includes a box for the lamp, tape, and a return shipping label.

Resetting the lamp

After replacing the lamp, you should reset the lamp hour counter to zero. Please follow the steps below.

1. Press the **Menu** button to open the main menu.
2. Press the cursor left/right button to move to the Info menu.
3. Press the cursor up/down button to move down to Lamp Timer.

4. Press the **Enter** button. The screen will show ″Press″ENTER″ to Lamp Timer Reset″.
5. .Press the **Enter** button again to reset the lamp hours.

Using the security slot

The projector has a security slot, as shown. Refer to the information that comes with the lock for instructions on how to use it.

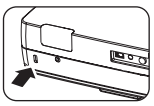

Appendix B. Troubleshooting

The following table provides troubleshooting information for the projector. In some cases, more than one possible solution is provided. Try the solutions in the order they are presented. When the problem is solved, you can skip the additional solutions.

Table B-1. Troubleshooting

Problem	Solution
No image appears on the screen.	• Make sure your computer and projector are turned on. • If the Blank screen is shown, press the **Blank** button on the remote control. • Verify the settings on your notebook or desktop PC. • Turn off all equipment and power up again in the correct order. See "Starting and shutting down the projector" on page 2-1.
The image is blurred	• Adjust the Focus on the projector. See "Adjusting the image" on page 2-4. • Press the **Auto** button on the remote control or the projector. • Ensure the projector-to-screen distance is within the range specified.
The image is wider at the top or bottom (trapezoid effect).	• Position the projector so it is as perpendicular to the screen as possible. • Use the **Keystone** button on the remote control or projector to correct the problem. See "Adjusting the image" on page 2-4.
The image is reversed or upside down.	Check the Projection setting on the Setup menu of the OSD. See "View menu" on page 5-4
The image is streaked.	• Set the Frequency and Tracking settings on the Setup menu of the OSD to the default settings. See "Navigating the OSD" on page 5-1. • To ensure the problem is not caused by a connected PC's video card, connect to another computer.
The image is flat with no contrast	Adjust the Contrast setting on the Main menu of the OSD. See "Navigating the OSD" on page 5-1.
The color of the projected image does not match the source image	Adjust the Color Temp. and Gamma settings on the ColorMgr menu of the OSD. See "Color menu" on page 5-2.

© Copyright IBM Corp. 2004

Table B-1. Troubleshooting (continued)

Problem	Solution
There is no light from the projector	• Check that the power cable is securely connected. • Ensure the power source is good by testing with another electrical device. • Restart the projector in the correct order and check that the Power LED is green. • If you have replaced the lamp recently, try resetting the lamp connections. Make sure the lamp cover is flush with the projector case when closed. • Replace the lamp module. See "Replacing the projector lamp" on page A-1. • Put the old lamp back in the projector and have the projector serviced.
The lamp goes off.	• Power surges can cause the lamp to turn off. Press the **Power** button twice to turn off the projector. When the Lamp Ready LED is on, press the **Power** button. • Replace with a new lamp module. See "Replacing the projector lamp" on page A-1. • Put the old lamp back in the projector and have the projector serviced.
The projector does not respond to the remote control.	• Direct the remote control towards the front or rear remote sensors on the projector. • Ensure the path between remote and sensor is not obstructed. • Turn off any fluorescent lights in the room. • Check the battery polarity. • Replace the batteries. • Turn off other Infrared-enabled devices in the vicinity. • Have the remote control serviced.
There is no sound.	• Adjust the volume on the remote control. • See "Adjusting the volume" on page 2-5. • Adjust the volume of the audio source. • Check the audio cable connection. • Test the source audio output with other speakers. • Have the projector serviced.
The sound is distorted.	• Check the audio cable connection. • Test the source audio output with other speakers. • Have the projector serviced.

Projector LEDs

The LEDs on top of the projector indicates the state of the projector and can help you troubleshoot.

Table B-2. Projector LED behavior and projector errors

LED behavior	Explanation
Lit red When the power is on (Lit green) Standby (Lit amber)	It is time to replace the lamp. Replace with a new lamp cartridge. See "Replacing the projector lamp" on page A-1 for more information.
Lit red Flashing amber for 60 seconds, then lit amber	The lamp has reached the end of its service life. The power will no longer turn on. The projector can be used for 100 hours after the lamp has reached the end of its service life. Replace with a new lamp cartridge. See "Replacing the projector lamp" on page A-1.
Flashing red (lit for 1 second/off for 1 second) Lit red	The lamp cover is open. The lamp cover is not properly mounted. Mount it properly.
Flashing red (lit for 0.5 seconds/off for 0.5 seconds) Lit red	The temperature is abnormally high. • The temperature protector has been activated. If the room temperature is high, move the projector to a cool place. If the projector's internal temperature is high, check the cooling fan's ventilation slots and clean them if they are clogged. • When the temperature protector is activated, the power turns off and in some cases will not turn back on immediately. In this case wait 90 seconds, then try again.
Flashing red (lit for 0.5 seconds/off for 0.5 seconds) Lit amber	The fan has stopped. Unplug the power cable and contact a store that sells the IBM M400 PROJECTOR for repairs.
Flashing red (lit for 1 second/off for 1 second) When the lamp has burned out during use Flashing amber for 90 seconds, then lit amber When the lamp does not come on from the start Lit amber	The lamp will not light. Wait at least 90 seconds, then turn the power back on. If the problem persists, unplug the power cable and contact a store that sells the IBM M400 PROJECTOR for repairs.

Note: If the projector LEDs flash in a manner that is not addressed above, unplug the power cable and contact your retailer.

Thermal protector

When the temperature inside the projector becomes abnormally high, the LED indicator flashes red (0.5 seconds on/0.5 seconds off) the Standby indicator is a steady red, and at the same time the temperature protector operates and switches off the power of the projector. If this happens, please follow the steps below:

1. Switch off the power and disconnected the power plug from the wall outlet.
2. Check the temperature of the room. If the projector is being used in a location with a high ambient temperature, set it up in a cooler location.
3. Check the vent openings to make sure that they are all clear. Clean the vent openings if they are obstructed.
4. Wait at least 1 hour until the temperature of the projector drops, then plug it in again.
5. If you are still having the same problem, please contact your retailer.

Appendix C. Specifications

Following are specifications for the IBM M400 projector.

Temperature (non-operating)	5° to 35° C (41° to 95° F) at sea level -10° to 60° C (14° to 140° F)
Altitude (operating) Altitude (non-operating)	3,048 m (0 to 10,000 ft) 12,192 m (0 to 40,000 ft)
Humidity (operating) Humidity (non-operating)	5% to 90% relative humidity, non-condensing 5% to 95% relative humidity, non-condensing
Dimensions	183 x 163 x 48 mm (7.2 x 6.4 x 1.9 in.)
Weight	1.1 kg (2.4 lbs) unpacked
Optics (focus range)	1.2 - 9.4 m (4 to 31 ft)
Lamp type	114 W lamp
Input power requirements	100-240V 1.8A 50/60 Hz

© Copyright IBM Corp. 2004

Appendix D. Service and Support

The following information describes the technical support that is available for your product, during the warranty period or throughout the life of the product. Refer to your IBM Statement of Limited Warranty for a full explanation of IBM warranty terms.

Online technical support

Online technical support is available during the life of your product through the Personal Computing Support Web site at www.ibm.com/pc/support.

During the warranty period, assistance for replacement or exchange of defective components is available. In addition, if your IBM option is installed in an IBM computer, you might be entitled to service at your location. Your technical support representative can help you determine the best alternative.

Telephone technical support

Installation and configuration support through the IBM Support Center will be withdrawn or made available for a fee, at IBM's discretion, 90 days after the option has been withdrawn from marketing. Additional support offerings, including step-by-step installation assistance, are available for a nominal fee.

To assist the technical support representative, have available as much of the following information as possible:

- Option name
- Option number
- Proof of purchase
- Computer manufacturer, model, serial number (if IBM), and manual
- Exact wording of the error message (if any)
- Description of the problem
- Hardware and software configuration information for your system

If possible, be at your computer. Your technical support representative might want to walk you through the problem during the call.

For the support telephone number and support hours by country, refer to the following table. If the number for your country or region is not listed, contact your IBM reseller or IBM marketing representative. Response time may vary depending on the number and nature of the calls received.

Phone numbers are subject to change without notice. For the latest phone number list, go to www.ibm.com/pc/support and click **Support Phone List**.

Country or Region	Telephone Number	Country or Region	Telephone Number
Argentina	0800-666-0011	Malaysia	03-7727-7800
Australia	1300-130-426	Mexico	001-866-434-2080
Austria	01-24592-5901	Netherlands	020-514-5770

© Copyright IBM Corp. 2004

Country or Region	Telephone Number	Country or Region	Telephone Number
Belgium	Dutch 02-210-9820 French 02-210-9800	New Zealand	0800-446-149
Bolivia	0800-0189	Norway	66 81 11 00
Brazil	55-11-3889-8986	Peru	0-800-50-866
Canada	1-800-565-3344 Toronto 416-383-3344	Philippines	632-995-2225
Chile	800-224-488	Portugal	21-791 51 47
China (PRC)	800-810-1818	Russia	095-940-2000
China (Hong Kong S.A.R.)	852-2825-7799	Singapore	1800-840-9911
Columbia	980-912-3021	Spain	91-662 49 16
Denmark	45 20 82 00	Sweden	08-477 4420
Ecuador	1-800-426911 (option #4)	Switzerland	058-333-09-00
Finland	09-459 69 60	Taiwan	886-2-2725-9799
France	02 38 55 74 50	Thailand	66-2-273-4000
Germany	07032-1549 201	Turkey	00-800-446-32-041
Indonesia	021-523-8535	United Kingdom	0-1475-555 055
Ireland	01-815-9202	United States	1-800-426-7378
Italy	02-7031-6101	Uruguay	000-411-005-6649
Japan	Consumer customers 0120-887-870 Business customers 0120-887-874	Venezuela	0-800-100-2011
Luxembourg	298-977 5063	Vietnam	848-8295-160

Appendix E. IBM Statement of Limited Warranty - Z125-4753-07 - 11/2002

Part 1 - General Terms

This Statement of Limited Warranty includes Part 1 - General Terms, Part 2 - Country-unique Terms, and Part 3 - Warranty Information. The terms of Part 2 replace or modify those of Part 1. The warranties provided by IBM in this Statement of Limited Warranty apply only to Machines you purchase for your use, and not for resale. The term "Machine" means an IBM machine, its features, conversions, upgrades, elements, or accessories, or any combination of them. The term "Machine" does not include any software programs, whether pre-loaded with the Machine, installed subsequently or otherwise. ***Nothing in this Statement of Limited Warranty affects any statutory rights of consumers that cannot be waived or limited by contract.***

What this Warranty Covers

IBM warrants that each Machine 1) is free from defects in materials and workmanship and 2) conforms to IBM's Official Published Specifications ("Specifications") which are available on request. The warranty period for the Machine starts on the original Date of Installation and is specified in Part 3 - Warranty Information. The date on your invoice or sales receipt is the Date of Installation unless IBM or your reseller informs you otherwise. Many features, conversions, or upgrades involve the removal of parts and their return to IBM. A part that replaces a removed part will assume the warranty service status of the removed part. Unless IBM specifies otherwise, these warranties apply only in the country or region in which you purchased the Machine.

THESE WARRANTIES ARE YOUR EXCLUSIVE WARRANTIES AND REPLACE ALL OTHER WARRANTIES OR CONDITIONS, EXPRESS OR IMPLIED, INCLUDING, BUT NOT LIMITED TO, THE IMPLIED WARRANTIES OR CONDITIONS OF MERCHANTABILITY AND FITNESS FOR A PARTICULAR PURPOSE. SOME STATES OR JURISDICTIONS DO NOT ALLOW THE EXCLUSION OF EXPRESS OR IMPLIED WARRANTIES, SO THE ABOVE EXCLUSION MAY NOT APPLY TO YOU. IN THAT EVENT, SUCH WARRANTIES ARE LIMITED IN DURATION TO THE WARRANTY PERIOD. NO WARRANTIES APPLY AFTER THAT PERIOD. SOME STATES OR JURISDICTIONS DO NOT ALLOW LIMITATIONS ON HOW LONG AN IMPLIED WARRANTY LASTS, SO THE ABOVE LIMITATION MAY NOT APPLY TO YOU.

What this Warranty Does not Cover

This warranty does not cover the following:

- any software programs, whether pre-loaded or shipped with the Machine, or installed subsequently;
- failure resulting from misuse (including but not limited to use of any Machine capacity or capability, other than that authorized by IBM in writing), accident, modification, unsuitable physical or operating environment, or improper maintenance by you;
- failure caused by a product for which IBM is not responsible; and

© Copyright IBM Corp. 2004

- any non-IBM products, including those that IBM may procure and provide with or integrate into an IBM Machine at your request.

The warranty is voided by removal or alteration of identification labels on the Machine or its parts.

IBM does not warrant uninterrupted or error-free operation of a Machine.

Any technical or other support provided for a Machine under warranty, such as assistance via telephone with "how-to" questions and those regarding Machine set-up and installation, is provided **WITHOUT WARRANTIES OF ANY KIND**.

How to Obtain Warranty Service

If the Machine does not function as warranted during the warranty period, contact IBM or your reseller to obtain warranty service. If you do not register the Machine with IBM, you may be required to present proof of purchase as evidence of your entitlement to warranty service.

What IBM Will Do to Correct Problems

When you call for service, you must follow the problem determination and resolution procedures that IBM specifies. A technician will attempt to make an initial diagnosis of your problem and help you resolve it over the telephone.

The type of warranty service applicable to your Machine is specified in Part 3 - Warranty Information.

You are responsible for downloading and installing designated Machine Code (microcode, basic input/output system code (called "BIOS"), utility programs, device drivers, and diagnostics delivered with an IBM Machine) and other software updates from an IBM Internet Web site or from other electronic media, and following the instructions that IBM provides.

If your problem can be resolved with a Customer Replaceable Unit ("CRU") (e.g., keyboard, mouse, speaker, memory, hard disk drive and other easily replaceable parts), IBM will ship these parts to you for replacement by you.

If the Machine does not function as warranted during the warranty period and your problem cannot be resolved over the telephone, through your application of Machine Code or software updates, or with a CRU, IBM or your reseller, if approved by IBM to provide warranty service, will either, at its discretion, 1) repair it to make it function as warranted, or 2) replace it with one that is at least functionally equivalent. If IBM is unable to do either, you may return the Machine to your place of purchase and your money will be refunded.

IBM or your reseller will also manage and install selected engineering changes that apply to the Machine.

Exchange of a Machine or Part

When the warranty service involves the exchange of a Machine or part, the item IBM or your reseller replaces becomes its property and the replacement becomes yours. You represent that all removed items are genuine and unaltered. The replacement may not be new, but will be in good working order and at least

functionally equivalent to the item replaced. The replacement assumes the warranty service status of the replaced item.

Your Additional Responsibilities

Before IBM or your reseller exchanges a Machine or part, you agree to remove all features, parts, options, alterations, and attachments not under warranty service.

You also agree to:

1. ensure that the Machine is free of any legal obligations or restrictions that prevent its exchange;
2. obtain authorization from the owner to have IBM or your reseller service a Machine that you do not own; and
3. where applicable, before service is provided:
   a. follow the service request procedures that IBM or your reseller provides;
   b. backup or secure all programs, data, and funds contained in the Machine;
   c. IBM or your reseller with sufficient, free, and safe access to your facilities to permit IBM to fulfill its obligations; and
   d. inform IBM or your reseller of changes in the Machine's location.
4. (a) ensure all information about identified or identifiable individuals (Personal Data) is deleted from the Machine (to the extent technically possible), (b) allow IBM, your reseller or an IBM supplier to process on your behalf any remaining Personal Data as IBM or your reseller considers necessary to fulfill its obligations under this Statement of Limited Warranty (which may include shipping the Machine for such processing to other IBM service locations around the world), and (c) ensure that such processing complies with any laws applicable to such Personal Data.

Limitation of Liability

IBM is responsible for loss of, or damage to, your Machine only while it is 1) in IBM's possession or 2) in transit in those cases where IBM is responsible for the transportation charges.

Neither IBM nor your reseller are responsible for any of your confidential, proprietary or personal information contained in a Machine which you return to IBM for any reason. You should remove all such information from the Machine prior to its return.

Circumstances may arise where, because of a default on IBM's part or other liability, you are entitled to recover damages from IBM. In each such instance, regardless of the basis on which you are entitled to claim damages from IBM (including fundamental breach, negligence, misrepresentation, or other contract or tort claim), except for any liability that cannot be waived or limited by applicable laws, IBM is liable for no more than

1. damages for bodily injury (including death) and damage to real property and tangible personal property; and
2. the amount of any other actual direct damages, up to the charges (if recurring, 12 months' charges apply) for the Machine that is subject of the claim. For purposes of this item, the term "Machine" includes Machine Code and Licensed Internal Code ("LIC").

This limit also applies to IBM's suppliers and your reseller. It is the maximum for which IBM, its suppliers, and your reseller are collectively responsible.

UNDER NO CIRCUMSTANCES IS IBM, ITS SUPPLIERS OR RESELLERS LIABLE FOR ANY OF THE FOLLOWING EVEN IF INFORMED OF THEIR POSSIBILITY: 1) THIRD PARTY CLAIMS AGAINST YOU FOR DAMAGES (OTHER THAN THOSE UNDER THE FIRST ITEM LISTED ABOVE); 2) LOSS OF, OR DAMAGE TO, DATA; 3) SPECIAL, INCIDENTAL, OR INDIRECT DAMAGES OR FOR ANY ECONOMIC CONSEQUENTIAL DAMAGES; OR 4) LOST PROFITS, BUSINESS REVENUE, GOODWILL OR ANTICIPATED SAVINGS. SOME STATES OR JURISDICTIONS DO NOT ALLOW THE EXCLUSION OR LIMITATION OF INCIDENTAL OR CONSEQUENTIAL DAMAGES, SO THE ABOVE LIMITATION OR EXCLUSION MAY NOT APPLY TO YOU. SOME STATES OR JURISDICTIONS DO NOT ALLOW LIMITATIONS ON HOW LONG AN IMPLIED WARRANTY LASTS, SO THE ABOVE LIMITATION MAY NOT APPLY TO YOU.

Governing Law

Both you and IBM consent to the application of the laws of the country in which you acquired the Machine to govern, interpret, and enforce all of your and IBM's rights, duties, and obligations arising from, or relating in any manner to, the subject matter of this Statement of Limited Warranty, without regard to conflict of law principles.

THESE WARRANTIES GIVE YOU SPECIFIC LEGAL RIGHTS AND YOU MAY ALSO HAVE OTHER RIGHTS WHICH VARY FROM STATE TO STATE OR JURISDICTION TO JURISDICTION.

Jurisdiction

All of our rights, duties, and obligations are subject to the courts of the country in which you acquired the Machine.

Part 2 - Country-unique Terms

AMERICAS

ARGENTINA

Governing Law: *The following is added after the first sentence:*

Any litigation arising from this Statement of Limited Warranty will be settled exclusively by the Ordinary Commercial Court of the city of Buenos Aires.

BRAZIL

Governing Law: *The following is added after the first sentence:*
Any litigation arising from this Statement of Limited Warranty will be settled exclusively by the court of Rio de Janeiro, RJ.

Peru

Limitation of Liability: Th*e following is added at the end of this section:*

In accordance with Article 1328 of the Peruvian Civil Code the limitations and exclusions specified in this section will not apply to damages caused by IBM's willful misconduct ("dolo") or gross negligence ("culpa inexcusable").

NORTH AMERICA

How to Obtain Warranty Service: *The following is added to this Section:*
To obtain warranty service from IBM in Canada or the United States, call 1-800-IBM-SERV (426-7378).

CANADA

Limitation of Liability: *The following replaces item 1 of this section:*

1. damages for bodily injury (including death) or physical harm to real property and tangible personal property caused by IBM's negligence; and

Governing Law: *The following replaces "laws of the country in which you acquired the Machine" in the first sentence:*
laws in the Province of Ontario.

UNITED STATES

Governing Law: *The following replaces "laws of the country in which you acquired the Machine" in the first sentence:*
laws of the State of New York.

ASIA PACIFIC

AUSTRALIA

What this Warranty Covers: *The following paragraph is added to this Section:*
The warranties specified in this Section are in addition to any rights you may have under the Trade Practices Act 1974 or other similar legislation and are only limited to the extent permitted by the applicable legislation.

Limitation of Liability: *The following is added to this Section:*
Where IBM is in breach of a condition or warranty implied by the Trade Practices Act 1974 or other similar legislation, IBM's liability is limited to the repair or replacement of the goods or the supply of equivalent goods. Where that condition or warranty relates to right to sell, quiet possession or clear title, or the goods are of a kind ordinarily acquired for personal, domestic or household use or consumption, then none of the limitations in this paragraph apply.

Governing Law: *The following replaces "laws of the country in which you acquired the Machine" in the first sentence:*
laws of the State or Territory.

CAMBODIA, LAOS, AND VIETNAM

Governing Law: *The following replaces "laws of the country in which you acquired the Machine" in the first sentence:*
laws of the State of New York, United States of America.

CAMBODIA, INDONESIA, LAOS, AND VIETNAM

Arbitration: *The following is added under this heading:*
Disputes arising out of or in connection with this Statement of Limited Warranty shall be finally settled by arbitration which shall be held in Singapore in accordance with the Arbitration Rules of Singapore International Arbitration Center (″SIAC Rules″) then in effect. The arbitration award shall be final and binding for the parties without appeal and shall be in writing and set forth the findings of fact and the conclusions of law.

The number of arbitrators shall be three, with each side to the dispute being entitled to appoint one arbitrator. The two arbitrators appointed by the parties shall appoint a third arbitrator who shall act as chairman of the proceedings. Vacancies in the post of chairman shall be filled by the president of the SIAC. Other vacancies shall be filled by the respective nominating party. Proceedings shall continue from the stage they were at when the vacancy occurred.

If one of the parties refuses or otherwise fails to appoint an arbitrator within 30 days of the date the other party appoints its, the first appointed arbitrator shall be the sole arbitrator, provided that the arbitrator was validly and properly appointed.

All proceedings shall be conducted, including all documents presented in such proceedings, in the English language. The English language version of this Statement of Limited Warranty prevails over any other language version.

HONG KONG S.A.R. OF CHINA AND MACAU S.A.R. OF CHINA

Governing Law: *The following replaces "laws of the country in which you acquired the Machine" in the first sentence:*
laws of Hong Kong Special Administrative Region of China.

INDIA

Limitation of Liability: *The following replaces items 1 and 2 of this Section:*
1. liability for bodily injury (including death) or damage to real property and tangible personal property will be limited to that caused by IBM's negligence; and
2. as to any other actual damage arising in any situation involving nonperformance by IBM pursuant to, or in any way related to the subject of this Statement of Limited Warranty, the charge paid by you for the individual Machine that is the subject of the claim. For purposes of this item, the term ″Machine″ includes Machine Code and Licensed Internal Code (″LIC″).

Arbitration: *The following is added under this heading :*

Disputes arising out of or in connection with this Statement of Limited Warranty shall be finally settled by arbitration which shall be held in Bangalore, India in accordance with the laws of India then in effect. The arbitration award shall be final and binding for the parties without appeal and shall be in writing and set forth the findings of fact and the conclusions of law.

The number of arbitrators shall be three, with each side to the dispute being entitled to appoint one arbitrator. The two arbitrators appointed by the parties shall appoint a third arbitrator who shall act as chairman of the proceedings. Vacancies in the post of chairman shall be filled by the president of the Bar Council of India. Other vacancies shall be filled by the respective nominating party. Proceedings shall continue from the stage they were at when the vacancy occurred.

If one of the parties refuses or otherwise fails to appoint an arbitrator within 30 days of the date the other party appoints its, the first appointed arbitrator shall be the sole arbitrator, provided that the arbitrator was validly and properly appointed.

All proceedings shall be conducted, including all documents presented in such proceedings, in the English language. The English language version of this Statement of Limited Warranty prevails over any other language version.

JAPAN

Governing Law: *The following sentence is added to this section:*
Any doubts concerning this Statement of Limited Warranty will be initially resolved between us in good faith and in accordance with the principle of mutual trust.

MALAYSIA

Limitation of Liability: *The word "**SPECIAL**" in item 3 of the fifth paragraph is deleted.*

NEW ZEALAND

What this Warranty Covers: *The following paragraph is added to this section:*
The warranties specified in this section are in addition to any rights you may have under the Consumer Guarantees Act 1993 or other legislation which cannot be excluded or limited. The Consumer Guarantees Act 1993 will not apply in respect of any goods which IBM provides, if you require the goods for the purposes of a business as defined in that Act.

Limitation of Liability: *The following is added to this section:*
Where Machines are not acquired for the purposes of a business as defined in the Consumer Guarantees Act 1993, the limitations in this section are subject to the limitations in that Act.

PEOPLE'S REPUBLIC OF CHINA (PRC)

Governing Law: *The following replaces* "laws of the country in which you acquired the Machine" in the first sentence:

laws of the State of New York, United States of America (except when local law requires otherwise).

PHILIPPINES

Limitation of Liability: *Item 3 in the fifth paragraph is replaced by the following:*

SPECIAL (INCLUDING NOMINAL AND EXEMPLARY DAMAGES), MORAL, INCIDENTAL, OR INDIRECT DAMAGES FOR ANY ECONOMIC CONSEQUENTIAL DAMAGES; OR

Arbitration: The following is added under this heading

Disputes arising out of or in connection with this Statement of Limited Warranty shall be finally settled by arbitration which shall be held in Metro Manila, Philippines in accordance with the laws of the Philippines then in effect. The

arbitration award shall be final and binding for the parties without appeal and shall be in writing and set forth the findings of fact and the conclusions of law.

The number of arbitrators shall be three, with each side to the dispute being entitled to appoint one arbitrator. The two arbitrators appointed by the parties shall appoint a third arbitrator who shall act as chairman of the proceedings. Vacancies in the post of chairman shall be filled by the president of the Philippine Dispute Resolution Center, Inc. Other vacancies shall be filled by the respective nominating party. Proceedings shall continue from the stage they were at when the vacancy occurred.

If one of the parties refuses or otherwise fails to appoint an arbitrator within 30 days of the date the other party appoints its, the first appointed arbitrator shall be the sole arbitrator, provided that the arbitrator was validly and properly appointed.

All proceedings shall be conducted, including all documents presented in such proceedings, in the English language. The English language version of this Statement of Limited Warranty prevails over any other language version.

SINGAPORE

Limitation of Liability: The words ″**SPECIAL**″ and ″**ECONOMIC**″ in item 3 in the fifth paragraph are deleted.

EUROPE, MIDDLE EAST, AFRICA (EMEA)

THE FOLLOWING TERMS APPLY TO ALL EMEA COUNTRIES:
The terms of this Statement of Limited Warranty apply to Machines purchased from IBM or an IBM reseller.

How to Obtain Warranty Service: If you purchase a Machine in Austria, Belgium, Cyprus, Denmark, Estonia, Finland, France, Germany, Greece, Iceland, Ireland, Italy, Latvia, Liechtenstein, Lithuania, Luxembourg, Monaco, Netherlands, Norway, Portugal, Spain, San Marino, Sweden, Switzerland, United Kingdom or Vatican State, you may obtain warranty service for that Machine in any of those countries from either (1) an IBM reseller approved to perform warranty service or (2) from IBM, provided the Machine has been announced and made available by IBM in the country in which you wish to obtain service. If you purchased a Personal Computer Machine in Albania, Armenia, Belarus, Bosnia and Herzegovina, Bulgaria, Croatia, Czech Republic, Georgia, Hungary, Kazakhstan, Kyrgyzstan, Federal Republic of Yugoslavia, Former Yugoslav Republic of Macedonia (FYROM), Moldova, Poland, Romania, Russia, Slovak Republic, Slovenia, or Ukraine, you may obtain warranty service for that Machine in any of those countries from either (1) an IBM reseller approved to perform warranty service or (2) from IBM.

If you purchase a Machine in a Middle Eastern or African country, you may obtain warranty service for that Machine from the IBM entity within the country of purchase, if that IBM entity provides warranty service in that country, or from an IBM reseller, approved by IBM to perform warranty service on that Machine in that country. Warranty service in Africa is available within 50 kilometers of an IBM approved service provider. You are responsible for transportation costs for Machines located outside 50 kilometers of an IBM approved service provider.

Add the following paragraph in ***Western Europe*** *(Austria, Belgium, Cyprus, Denmark, Finland, France, Germany, Greece, Iceland, Ireland, Italy, Liechtenstein, Luxembourg, Monaco, Netherlands, Norway, Portugal, Spain, San Marino, Sweden, Switzerland, United Kingdom, Vatican State):*

The warranty for Machines acquired in Western Europe shall be valid and applicable in all Western Europe countries provided the Machines have been announced and made available in such countries.

Governing Law:

The phrase "the laws of the country in which you acquired the Machine" *is replaced by:*

1) "the laws of Austria" **in Albania, Armenia, Azerbaijan, Belarus, Bosnia-Herzegovina, Bulgaria, Croatia, Georgia, Hungary, Kazakhstan, Kyrgyzstan, FYR Macedonia, Moldova, Poland, Romania, Russia, Slovakia, Slovenia, Tajikistan, Turkmenistan, Ukraine, Uzbekistan, and FR Yugoslavia;** 2) "the laws of France" **in Algeria, Benin, Burkina Faso, Cameroon, Cape Verde, Central African Republic, Chad, Comoros, Congo Republic, Djibouti, Democratic Republic of Congo, Equatorial Guinea, French Guiana, French Polynesia, Gabon, Gambia, Guinea, Guinea-Bissau, Ivory Coast, Lebanon, Madagascar, Mali, Mauritania, Mauritius, Mayotte, Morocco, New Caledonia, Niger, Reunion, Senegal, Seychelles, Togo, Tunisia, Vanuatu, and Wallis & Futuna;** 3) "the laws of Finland" **in Estonia, Latvia, and Lithuania;** 4) "the laws of England" **in Angola, Bahrain, Botswana, Burundi, Egypt, Eritrea, Ethiopia, Ghana, Jordan, Kenya, Kuwait, Liberia, Malawi, Malta, Mozambique, Nigeria, Oman, Pakistan, Qatar, Rwanda, Sao Tome, Saudi Arabia, Sierra Leone, Somalia, Tanzania, Uganda, United Arab Emirates, the United Kingdom, West Bank/Gaza, Yemen, Zambia, and Zimbabwe;** and 5) "the laws of South Africa" **in South Africa, Namibia, Lesotho and Swaziland.**

Jurisdiction: *The following exceptions are added to this section:*

1) **In** ***Austria*** the choice of jurisdiction for all disputes arising out of this Statement of Limited Warranty and relating thereto, including its existence, will be the competent court of law in Vienna, Austria (Inner-City); 2) **in Angola, Bahrain, Botswana, Burundi, Egypt, Eritrea, Ethiopia, Ghana, Jordan, Kenya, Kuwait, Liberia, Malawi, Malta, Mozambique, Nigeria, Oman, Pakistan, Qatar, Rwanda, Sao Tome, Saudi Arabia, Sierra Leone, Somalia, Tanzania, Uganda, United Arab Emirates, West Bank/Gaza, Yemen, Zambia, and Zimbabwe** all disputes arising out of this Statement of Limited Warranty or related to its execution, including summary proceedings, will be submitted to the exclusive jurisdiction of the English courts; 3) in **Belgium** and **Luxembourg**, all disputes arising out of this Statement of Limited Warranty or related to its interpretation or its execution, the law, and the courts of the capital city, of the country of your registered office and/or commercial site location only are competent; 4) **in France, Algeria, Benin, Burkina Faso, Cameroon, Cape Verde, Central African Republic, Chad, Comoros, Congo Republic, Djibouti, Democratic Republic of Congo, Equatorial Guinea, French Guiana, French Polynesia, Gabon, Gambia, Guinea, Guinea-Bissau, Ivory Coast, Lebanon, Madagascar, Mali, Mauritania, Mauritius, Mayotte, Morocco, New Caledonia, Niger, Reunion, Senegal, Seychelles, Togo, Tunisia, Vanuatu, and Wallis & Futuna** all disputes arising out of this Statement of Limited Warranty or related to its violation or execution, including summary proceedings, will be settled exclusively by the Commercial Court of Paris; 5) in **Russia**, all disputes arising out of or in relation to the interpretation, the violation, the termination, the

nullity of the execution of this Statement of Limited Warranty shall be settled by Arbitration Court of Moscow; 6) **in South Africa, Namibia, Lesotho and Swaziland**, both of us agree to submit all disputes relating to this Statement of Limited Warranty to the jurisdiction of the High Court in Johannesburg; 7) **in Turkey** all disputes arising out of or in connection with this Statement of Limited Warranty shall be resolved by the Istanbul Central (Sultanahmet) Courts and Execution Directorates of Istanbul, the Republic of Turkey; 8) in each of the following specified countries, any legal claim arising out of this Statement of Limited Warranty will be brought before, and settled exclusively by, the competent court of a) Athens for **Greece**, b) Tel Aviv-Jaffa for **Israel**, c) Milan for **Italy**, d) Lisbon for **Portugal**, and e) Madrid for **Spain**; and 9) **in the United Kingdom**, both of us agree to submit all disputes relating to this Statement of Limited Warranty to the jurisdiction of the English courts.

Arbitration: *The following is added under this heading:*

In Albania, Armenia, Azerbaijan, Belarus, Bosnia-Herzegovina, Bulgaria, Croatia, Georgia, Hungary, Kazakhstan, Kyrgyzstan, FYR Macedonia, Moldova, Poland, Romania, Russia, Slovakia, Slovenia, Tajikistan, Turkmenistan, Ukraine, Uzbekistan, and FR Yugoslavia all disputes arising out of this Statement of Limited Warranty or related to its violation, termination or nullity will be finally settled under the Rules of Arbitration and Conciliation of the International Arbitral Center of the Federal Economic Chamber in Vienna (Vienna Rules) by three arbitrators appointed in accordance with these rules. The arbitration will be held in Vienna, Austria, and the official language of the proceedings will be English. The decision of the arbitrators will be final and binding upon both parties. Therefore, pursuant to paragraph 598 (2) of the Austrian Code of Civil Procedure, the parties expressly waive the application of paragraph 595 (1) figure 7 of the Code. IBM may, however, institute proceedings in a competent court in the country of installation.

In Estonia, Latvia and Lithuania all disputes arising in connection with this Statement of Limited Warranty will be finally settled in arbitration that will be held in Helsinki, Finland in accordance with the arbitration laws of Finland then in effect. Each party will appoint one arbitrator. The arbitrators will then jointly appoint the chairman. If arbitrators cannot agree on the chairman, then the Central Chamber of Commerce in Helsinki will appoint the chairman.

EUROPEAN UNION (EU)

THE FOLLOWING TERMS APPLY TO ALL EU COUNTRIES:

Consumers have legal rights under applicable national legislation governing the sale of consumer goods. Such rights are not affected by the warranties provided in this Statement of Limited Warranty.

How to Obtain Warranty Service: *The following is added to this section:*

To obtain warranty service from IBM in EU countries, see the telephone listing in Part 3 - Warranty Information.

You may contact IBM at the following address:

IBM Warranty & Service Quality Dept.

PO Box 30

Spango Valley

Greenock

Scotland PA 16 OAH

AUSTRIA, DENMARK, FINLAND, GREECE, ITALY, NETHERLANDS, PORTUGAL, SPAIN, SWEDEN AND SWITZERLAND

Limitation of Liability: *The following replaces the terms of this section in its entirety:*

Except as otherwise provided by mandatory law:

1. IBM's liability for any damages and losses that may arise as a consequence of the fulfillment of its obligations under or in connection with this Statement of Limited Warranty or due to any other cause related to this Statement of Limited Warranty is limited to the compensation of only those damages and losses proved and actually arising as an immediate and direct consequence of the non-fulfillment of such obligations (if IBM is at fault) or of such cause, for a maximum amount equal to the charges you paid for the Machine. For purposes of this item, the term "Machine" includes Machine Code and Licensed Internal Code ("LIC").

   The above limitation shall not apply to damages for bodily injuries (including death) and damages to real property and tangible personal property for which IBM is legally liable.
2. **UNDER NO CIRCUMSTANCES IS IBM, ITS SUPPLIERS OR RESELLERS LIABLE FOR ANY OF THE FOLLOWING, EVEN IF INFORMED OF THEIR POSSIBILITY: 1) LOSS OF, OR DAMAGE TO, DATA; 2) INCIDENTAL OR INDIRECT DAMAGES, OR FOR ANY ECONOMIC CONSEQUENTIAL DAMAGES; 3) LOST PROFITS, EVEN IF THEY ARISE AS AN IMMEDIATE CONSEQUENCE OF THE EVENT THAT GENERATED THE DAMAGES; OR 4) LOSS OF BUSINESS, REVENUE, GOODWILL, OR ANTICIPATED SAVINGS.**

FRANCE AND BELGIUM

Limitation of Liability: *The following replaces ther terms of this section in its entirety:*

Except as otherwise provided by mandatory law:

1. IBM's liability for any damages and losses that may arise as a consequence of the fulfillment of its obligations under or in connection with this Statement of Limited Warranty is limited to the compensation of only those damages and losses proved and actually arising as an immediate and direct consequence of the non-fulfillment of such obligations (if IBM is at fault), for a maximum amount equal to the charges you paid for the Machine that has caused the damages. For purposes of this item, the term "Machine" includes Machine Code and Licensed Internal Code ("LIC").

   The above limitation shall not apply to damages for bodily injuries (including death) and damages to real property and tangible personal property for which IBM is legally liable.
2. **UNDER NO CIRCUMSTANCES IS IBM, ITS SUPPLIERS OR RESELLERS LIABLE FOR ANY OF THE FOLLOWING, EVEN IF INFORMED OF THEIR POSSIBILITY: 1) LOSS OF, OR DAMAGE TO, DATA; 2) INCIDENTAL OR INDIRECT DAMAGES, OR FOR ANY ECONOMIC CONSEQUENTIAL DAMAGES; 3) LOST PROFITS, EVEN IF THEY ARISE AS AN IMMEDIATE**

CONSEQUENCE OF THE EVENT THAT GENERATED THE DAMAGES; OR 4) LOSS OF BUSINESS, REVENUE, GOODWILL, OR ANTICIPATED SAVINGS.

THE FOLLOWING TERMS APPLY TO THE COUNTRY SPECIFIED:

AUSTRIA

What this Warranty Covers: *The following replaces the first sentence of the first paragraph of this section:*
The warranty for an IBM Machine covers the functionality of the Machine for its normal use and the Machine's conformity to its Specifications.

The following paragraphs are added to this Section:

The minimum warranty period for Machines is 12 months from the date of delivery. . The limitation period for consumers in action for breach of warranty is the statutory period as a minimum. In case IBM or your reseller is unable to repair an IBM Machine, you can alternatively ask for a partial refund as far as justified by the reduced value of the unrepaired Machine or ask for a cancellation of the respective agreement for such Machine and get your money refunded.

The second paragraph does not apply.

What IBM Will Do to Correct Problems: *The following is added to this section:*

During the warranty period, transportation for delivery of the failing Machine to IBM will be at IBM's expense.

Limitation of Liability: *The following paragraph is added to this section:*

The limitations and exclusions specified in the Statement of Limited Warranty will not apply to damages caused by IBM with fraud or gross negligence and for express warranty.

The following sentence is added to the end of item 2:

IBM's liability under this item is limited to the violation of essential contractual terms in cases of ordinary negligence.

EGYPT

Limitation of Liability: *The following replaces item 2 in this section:*
as to any other actual direct damages, IBM's liability will be limited to the total amount you paid for the Machine that is the subject of the claim. For purposes of this item, the term "Machine" includes Machine Code and Licensed Internal Code (LIC).

Applicability of suppliers and resellers (unchanged).

FRANCE

Limitation of Liability: *The following replaces the second sentence of the first paragraph of this section:*
In such instances, regardless of the basis on which you are entitled to claim damages from IBM, IBM is liable for no more than: *(items 1 and 2 unchanged)*.

GERMANY

What this Warranty Covers: *The following replaces the first sentence of the first paragraph of this section:*

The warranty for an IBM Machine covers the functionality of the Machine for its normal use and the Machine's conformity to its Specifications.

The following paragraphs are added to this section:

The minimum warranty period for Machines is twelve months. In case IBM or your reseller is unable to repair an IBM Machine, you can alternatively ask for a partial refund as far as justified by the reduced value of the unrepaired Machine or ask for a cancellation of the respective agreement for such Machine and get your money refunded.

The second paragraph does not apply.

What IBM Will Do to Correct Problems: *The following is added to this section:*

During the warranty period, transportation for delivery of the failing Machine to IBM will be at IBM's expense.

Limitation of Liability: *The following paragraph is added to this section:*

The limitations and exclusions specified in the Statement of Limited Warranty will not apply to damages caused by IBM with fraud or gross negligence and for express warranty.

The following sentence is added to the end of item 2:

IBM's liability under this item is limited to the violation of essential contractual terms in cases of ordinary negligence.

HUNGARY

Limitation of Liability: *The following is added at the end of this section:*

The limitation and exclusion specified herein shall not apply to liability for a breach of contract damaging life, physical well-being, or health that has been caused intentionally, by gross negligence, or by a criminal act.

The parties accept the limitations of liability as valid provisions and state that the Section 314.(2) of the Hungarian Civil Code applies as the acquisition price as well as other advantages arising out of the present Statement of Limited Warranty balance this limitation of liability.

IRELAND

What this Warranty Covers: *The following is added to this section:*
Except as expressly provided in these terms and conditions, all statutory conditions, including all warranties implied, but without prejudice to the generality of the foregoing all warranties implied by the Sale of Goods Act 1893 or the Sale of Goods and Supply of Services Act 1980 are hereby excluded.

Limitation of Liability: *The following replaces the terms of this section in its entirety:*

For the purposes of this section, a "Default" means any act, statement, omission, or negligence on the part of IBM in connection with, or in relation to, the subject matter of this Statement of Limited Warranty in respect of which IBM is legally liable to you, whether in contract or tort. A number of Defaults which together result in, or contribute to, substantially the same loss or damage will be treated as one Default occurring on the date of occurrence of the last such Default.

Circumstances may arise where, because of a Default, you are entitled to recover damages from IBM.

This section sets out the extent of IBM's liability and your sole remedy.

1. IBM will accept unlimited liability for death or personal injury caused by the negligence of IBM.
2. Subject always to the Items for Which IBM is Not Liable below, IBM will accept unlimited liability for physical damage to your tangible property resulting from the negligence of IBM.
3. Except as provided in items 1 and 2 above, IBM's entire liability for actual damages for any one Default will not in any event exceed the greater of 1) EUR 125,000, or 2) 125% of the amount you paid for the Machine directly relating to the Default.

Items for Which IBM is Not Liable

Save with respect to any liability referred to in item 1 above, under no circumstances is IBM, its suppliers or resellers liable for any of the following, even if IBM or they were informed of the possibility of such losses:

1. loss of, or damage to, data;
2. special, indirect, or consequential loss; or
3. loss of profits, business, revenue, goodwill, or anticipated savings.

SLOVAKIA

Limitation of Liability: *The following is added to the end of the last paragraph:*

The limitations apply to the extent they are not prohibited under §§ 373-386 of the Slovak Commercial Code.

SOUTH AFRICA, NAMIBIA, BOTSWANA, LESOTHO AND SWAZILAND

Limitation of Liability: *The following is added to this section:*

IBM's entire liability to you for actual damages arising in all situations involving nonperformance by IBM in respect of the subject matter of this Statement of Warranty will be limited to the charge paid by you for the individual Machine that is the subject of your claim from IBM.

UNITED KINGDOM

Limitation of Liability: *The following replaces the terms of this section in its entirety:*

For the purposes of this section, a "Default" means any act, statement, omission, or negligence on the part of IBM in connection with, or in relation to, the subject matter of this Statement of Limited Warranty in respect of which IBM is legally

liable to you, whether in contract or tort. A number of Defaults which together result in, or contribute to, substantially the same loss or damage will be treated as one Default.

Circumstances may arise where, because of a Default, you are entitled to recover damages from IBM.

This section sets out the extent of IBM's liability and your sole remedy.

1. IBM will accept unlimited liability for:
   a. death or personal injury caused by the negligence of IBM; and
   b. any breach of its obligations implied by Section 12 of the Sale of Goods Act 1979 or Section 2 of the Supply of Goods and Services Act 1982, or any statutory modification or re-enactment of either such Section.
2. IBM will accept unlimited liability, subject always to the Items for Which IBM is Not Liable below, for physical damage to your tangible property resulting from the negligence of IBM.
3. IBM's entire liability for actual damages for any one Default will not in any event, except as provided in items 1 and 2 above, exceed the greater of 1) Pounds Sterling 75,000, or 2) 125% of the total purchase price payable or the charges for the Machine directly relating to the Default.

These limits also apply to IBM's suppliers and resellers. They state the maximum for which IBM and such suppliers and resellers are collectively responsible.

Items for Which IBM is Not Liable

Save with respect to any liability referred to in item 1 above, under no circumstances is IBM or any of its suppliers or resellers liable for any of the following, even if IBM or they were informed of the possibility of such losses:

1. loss of, or damage to, data:
2. special, indirect, or consequential loss; or
3. loss of profits, business, revenue, goodwill, or anticipated savings.

Part 3 - Warranty Information

This Part 3 provides information regarding the warranty applicable to your Machine, including the warranty period and type of warranty service IBM provides.

Warranty Period

The warranty period may vary by country or region and is specified in the table below. NOTE: "Region" means either Hong Kong or Macau Special Administrative Region of China.

M400 PROJECTOR

Country or Region of Purchase	Warranty Period	Type of Warranty Service
Worldwide	3 years	1, 4

M400 PROJECTOR LAMP

Country or Region of Purchase	Warranty Period	Type of Warranty Service
Worldwide	3 months	1, 4

A warranty period of 3 years on parts and 3 years on labor means that IBM provides warranty service without charge for parts and labor during the 3 year warranty period.

A warranty period of 3 months on parts and 3 months on labor means that IBM provides warranty service without charge for parts and labor during the 3 month warranty period.

Types of Warranty Service

If required, IBM provides repair or exchange service depending on the type of warranty service specified for your Machine in the above table and as described below. Warranty service may be provided by your reseller if approved by IBM to perform warranty service. Scheduling of service will depend upon the time of your call and is subject to parts availability. Service levels are response time objectives and are not guaranteed. The specified level of warranty service may not be available in all worldwide locations, additional charges may apply outside IBM's normal service area, contact your local IBM representative or your reseller for country and location specific information.

1. Customer Replaceable Unit (″CRU″) Service

IBM will ship CRU parts to you for your replacement. If IBM instructs you to return the replaced CRU, you are responsible for returning it to IBM in accordance with IBM's instructions. If you do not return the defective CRU, if IBM so instructs, within 30 days of your receipt of the replacement CRU, IBM may charge you for the replacement.

2. On-site Service

IBM or your reseller will either repair or exchange the failing Machine at your location and verify its operation. You must provide suitable working area to allow disassembly and reassembly of the IBM Machine. The area must be clean, well lit and suitable for the purpose. **For some Machines, certain repairs may require sending the Machine to an IBM service center.**

3. Courier or Depot Service[1]

You will disconnect the failing Machine for collection arranged by IBM. IBM will provide you with a shipping container for you to return your Machine to a designated service center. A courier will pick up your Machine and deliver it to the designated service center. Following its repair or exchange, IBM will arrange the return delivery of the Machine to your location. You are responsible for its installation and verification.

4. Customer Carry-In or Mail-In Service

1. This type of service is called ThinkPad EasyServ or EasyServ in some countries.

You will deliver or mail as IBM specifies (prepaid unless IBM specifies otherwise) the failing Machine suitably packaged to a location IBM designates. After IBM has repaired or exchanged the Machine, IBM will make it available for your collection or, for Mail-in Service, IBM will return it to you at IBM's expense, unless IBM specifies otherwise. You are responsible for the subsequent installation and verification of the Machine.

The IBM Machine Warranty worldwide web site at http://www.ibm.com/servers/support/machine_warranties/ provides a worldwide overview of IBM's Limited Warranty for Machines, a Glossary of IBM definitions, Frequently Asked Questions (FAQs) and Support by Product (Machine) with links to Product Support pages. **The IBM Statement of Limited Warranty is also available on this site in 29 languages.**

To obtain warranty service contact IBM or your IBM reseller. In Canada or the United States, call 1-800-IBM-SERV (426-7378). For other countries, see the telephone numbers below.

Phone numbers are subject to change without notice. For the latest phone number list, go to www.ibm.com/pc/support and click **Support Phone List.**

Country or Region	Telephone Number	Country or Region	Telephone Number
Argentina	0800-666-0011	Malaysia	03-7727-7800
Australia	1300-130-426	Mexico	001-866-434-2080
Austria	01-24592-5901	Netherlands	020-514-5770
Belgium	Dutch 02-210-9820 French 02-210-9800	New Zealand	0800-446-149
Bolivia	0800-0189	Norway	66 81 11 00
Brazil	55-11-3889-8986	Peru	0-800-50-866
Canada	1-800-565-3344 Toronto 416-383-3344	Philippines	632-995-2225
Chile	800-224-488	Portugal	21-791 51 47
China (PRC)	800-810-1818	Russia	095-940-2000
China (Hong Kong S.A.R.)	852-2825-7799	Singapore	1800-840-9911
Columbia	980-912-3021	Spain	91-662 49 16
Denmark	45 20 82 00	Sweden	08-477 4420
Ecuador	1-800-426911 (option #4)	Switzerland	058-333-09-00
Finland	09-459 69 60	Taiwan	886-2-2725-9799
France	02 38 55 74 50	Thailand	66-2-273-4000
Germany	07032-1549 201	Turkey	00-800-446-32-041
Indonesia	021-523-8535	United Kingdom	0-1475-555 055
Ireland	01-815-9202	United States	1-800-426-7378
Italy	02-7031-6101	Uruguay	000-411-005-6649

Country or Region	Telephone Number	Country or Region	Telephone Number
Japan	Consumer customers 0120-887-870 Business customers 0120-887-874	Venezuela	0-800-100-2011
Luxembourg	298-977 5063	Vietnam	848-8295-160

Appendix F. Notices

IBM may not offer the products, services, or features discussed in this document in all countries. Consult your local IBM representative for information on the products and services currently available in your area. Any reference to an IBM product, program, or service is not intended to state or imply that only that IBM product, program, or service may be used. Any functionally equivalent product, program, or service that does not infringe any IBM intellectual property right may be used instead. However, it is the user's responsibility to evaluate and verify the operation of any non-IBM product, program, or service.

IBM may have patents or pending patent applications covering subject matter described in this document. The furnishing of this document does not give you any license to these patents. You can send license inquiries, in writing, to:

IBM Director of Licensing
IBM Corporation
North Castle Drive
Armonk, NY 10504-1785
U.S.A.

INTERNATIONAL BUSINESS MACHINES CORPORATION PROVIDES THIS PUBLICATION "AS IS" WITHOUT WARRANTY OF ANY KIND, EITHER EXPRESS OR IMPLIED, INCLUDING, BUT NOT LIMITED TO, THE IMPLIED WARRANTIES OF NON-INFRINGEMENT, MERCHANTABILITY OR FITNESS FOR A PARTICULAR PURPOSE. Some jurisdictions do not allow disclaimer of express or implied warranties in certain transactions, therefore, this statement may not apply to you.

This information could include technical inaccuracies or typographical errors. Changes are periodically made to the information herein; these changes will be incorporated in new editions of the publication. IBM may make improvements and/or changes in the product(s) and/or the program(s) described in this publication at any time without notice.

The products described in this document are not intended for use in implantation or other life support applications where malfunction may result in injury or death to persons. The information contained in this document does not affect or change IBM product specifications or warranties. Nothing in this document shall operate as an express or implied license or indemnity under the intellectual property rights of IBM or third parties. All information contained in this document was obtained in specific environments and is presented as an illustration. The result obtained in other operating environments may vary.

IBM may use or distribute any of the information you supply in any way it believes appropriate without incurring any obligation to you.

Any references in this publication to non-IBM Web sites are provided for convenience only and do not in any manner serve as an endorsement of those Web sites. The materials at those Web sites are not part of the materials for this IBM product, and use of those Web sites is at your own risk.

Any performance data contained herein was determined in a controlled environment. Therefore, the result obtained in other operating environments may

© Copyright IBM Corp. 2004

vary significantly. Some measurements may have been made on development-level systems and there is no guarantee that these measurements will be the same on generally available systems. Furthermore, some measurements may have been estimated through extrapolation. Actual results may vary. Users of this document should verify the applicable data for their specific environment.

Trademarks

The following terms are trademarks of International Business Machines Corporation in the United States, other countries, or both:

IBM
IBM logo
ThinkPad

Microsoft and Windows are trademarks of Microsoft Corporation in the United States, other countries, or both.

Other company, product, or service names may be trademarks or service marks of others.

Electronic emission notices

IBM M400 PROJECTOR

Federal Communications Commission (FCC) statement

Note: This equipment has been tested and found to comply with the limits for a Class A digital device, pursuant to Part 15 of the FCC Rules. These limits are designed to provide reasonable protection against harmful interference when the equipment is operated in a commercial environment. This equipment generates, uses, and can radiate radio frequency energy and, if not installed and used in accordance with the instruction manual, may cause harmful interference to radio communications. Operation of this equipment in a residential area is likely to cause harmful interference, in which case the user will be required to correct the interference at his own expense.

Properly shielded and grounded cables and connectors must be used in order to meet FCC emission limits. IBM is not responsible for any radio or television interference caused by using other than recommended cables and connectors or by unauthorized changes or modifications to this equipment. Unauthorized changes or modifications could void the user's authority to operate the equipment.

This device complies with Part 15 of the FCC Rules. Operation is subject to the following two conditions: (1) this device may not cause harmful interference, and (2) this device must accept any interference received, including interference that may cause undesired operation.

Industry Canada Class A emission compliance statement

This Class A digital apparatus complies with Canadian ICES-003.

Avis de conformite a la reglementation d'Industrie Canada

Cet appareil numérique de la classe A est conform à la norme NMB-003 du Canada.

Deutsche EMV-Direktive (electromagnetische Verträglichkeit)

Dieses Gerät ist berechtigt in Übereinstimmung mit dem deutschen EMVG vom 9.Nov.92 das EG-Konformitätszeichen zu führen.

Der Aussteller der Konformitätserklärung ist die IBM UK, Greenock.

Dieses Gerät erfüllt die Bedingungen der EN 55022 Klasse A. Für diese Klasse von Geräten gilt folgende Bestimmung nach dem EMVG:

Geräte dürfen an Orten, für die sie nicht ausreichend entstört sind, nur mit besonderer Genehmigung des Bundesminesters für Post und Telekommunikation oder des Bundesamtes für Post und Telekommunikation betrieben werden. Die Genehmigung wird erteilt, wenn keine elektromagnetischen Störungen zu erwarten sind.

(Auszug aus dem EMVG vom 9.Nov.92, Para.3. Abs.4)

Hinweis: Dieses Genehmigungsverfahren ist von der Deutschen Bundespost noch nicht veröffentlicht worden.

Europen Union - EMC directive

This product is in conformity with the protection requirements of EU Council Directive 89/336/ECC on the approximation of the laws of the Member States relating to electromagnetic compatibility.

IBM cannot accept responsibility for any failure to satisfy the protection requirements resulting from a non-recommended modification of the product, including the fitting of non-IBM option cards.

This product has been tested and found to comply with the limits for Class A Information Technology Equipment according to CISPR 22/European Standard EN 55022. The limits for Class A equipment were derived for commercial and industrial environments to provide reasonable protection against interference with licensed communication equipment.

Warning: This is a Class A product. In a domestic environment this product may cause radio interference in which case the user may be required to take adequate measures.

Union Européenne - Directive Conformité électromagnétique

Ce produit est conforme aux exigences de protection de la Directive 89/336/EEC du Conseil de l'UE sur le rapprochement des lois des États membres en matière de compatibilité électromagnétique.

IBM ne peut accepter aucune responsabilité pour le manquement aux exigences de protection résultant d'une modification non recommandée du produit, y compris l'installation de cartes autres que les cartes IBM.

Ce produit a été testé et il satisfait les conditions de l'équipement informatique de Classe A en vertu de CISPR22/Standard européen EN 55022. Les conditions pour l'équipement de Classe A ont été définies en fonction d'un contexte d'utilisation commercial et industriel afin de fournir une protection raisonnable contre l'interférence d'appareils de communication autorisés.

Avertissement : Ceci est un produit de Classe A. Dans un contexte résidentiel, ce produit peut causer une interférence radio exigeant que l'utilisateur prenne des mesures adéquates.

Union Europea - Normativa EMC

Questo prodotto è conforme alle normative di protezione ai sensi della Direttiva del Consiglio dell'Unione Europea 89/336/CEE sull'armonizzazione legislativa degli stati membri in materia di compatibilità elettromagnetica.

IBM non accetta responsabilità alcuna per la mancata conformità alle normative di protezione dovuta a modifiche non consigliate al prodotto, compresa l'installazione di schede e componenti di marca diversa da IBM.

Le prove effettuate sul presente prodotto hanno accertato che esso rientra nei limiti stabiliti per le le apparecchiature di informatica Classe A ai sensi del CISPR 22/Norma Europea EN 55022. I limiti delle apparecchiature della Classe A sono stati stabiliti al fine di fornire ragionevole protezione da interferenze mediante dispositivi di comunicazione in concessione in ambienti commerciali ed industriali.

Avvertimento: Questso è un prodotto appartenente alla Classe A. In ambiente domestico, tale prodotto può essere causa di interferenze radio, nel qual caso l'utente deve prendere misure adeguate.

Unione Europea - Directiva EMC (Conformidad électromagnética)

Este producto satisface los requisitos de protección del Consejo de la UE, Directiva 89/336/CEE en lo que a la legislatura de los Estados Miembros sobre compatibilidad electromagnética se refiere.

IBM no puede aceptar responsabilidad alguna si este producto deja de satisfacer dichos requisitos de protección como resultado de una modificación no recomendada del producto, incluyendo el ajuste de tarjetas de opción que no sean IBM.

Este producto ha sido probado y satisface los límites para Equipos Informáticos Clase A de conformidad con el Estándar CISPR22 y el Estándar Europeo EN 55022. Los límites para los equipos de Clase A se han establecido para entornos comerciales e industriales a fin de proporcionar una protección razonable contra las interferencias con dispositivos de comunicación licenciados.

Advertencia: Este es un producto de Clase A. En un entorno doméstico este producto podría causar radiointerferencias en cuyo caso el usuario deberá tomar las medidas adecuadas.

この装置は、情報処理装置等電波障害自主規制協議会（ＶＣＣＩ）の基準に基づくクラスＡ情報技術装置です。この装置を家庭環境で使用すると電波妨害を引き起こすことがあります。この場合には使用者が適切な対策を講ずるよう要求されることがあります。

警告使用者：
這是甲類的資訊產品，在居住的環境中使用時，可能會造成射頻干擾，在這種情況下，使用者會被要求採取某些適當的對策。

声明

此为A级产品,在生活环境中,该产品可能会造成无线电干扰.这种情况下,可能需要用户对其干扰采取切实可行的措施

声明

此为A级产品,在生活环境中,该产品可能会造成无线电干扰.这种情况下,可能需要用户对其干扰采取切实可行的措施

Part Number: 22P9382

Printed in USA

(1P) P/N: 22P9382