myprojectorlamps.com

The most trusted, dependable name in projector lamp sales.

http://www.myprojectorlamps.com

http://www.myprojectorlamps.ca

http://www.myprojectorlamps.eu

The following projector manual has not been modified or altered in any way.

HITACHI

Liquid Crystal Projector

Model name

CP-X940W/E

OPERATING GUIDE

ENGLISH

Thank you very much for purchasing this hitachi Liquid Crystal Projector.
Please read this operating guide to use correctly. After reading this manual, keep it carefully for future reference.

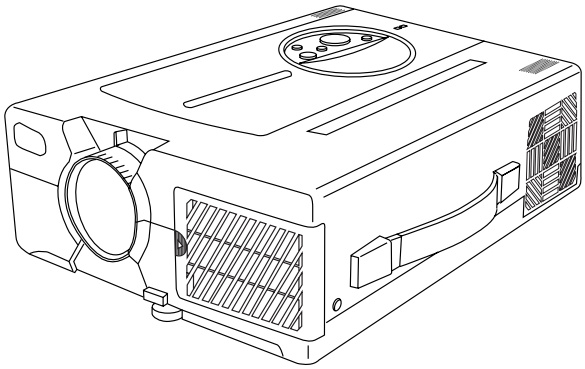

Outline

This Liquid Crystal Projector can display various computer signals and NTSC/PAL/SECAM video signals.

Features

(1) High brightness

A highly efficient optical system with a UHP lamp ensures high brightness.

(2) High resolution

Three separate high-definition liquid crystal panels are used for the R, G and B signals.

(3) Compact size, light weight for portability

(4) RGB output terminal

(5) RS232C Communication

(6) Mouse emulation

(7) Power zoom and power focus functions

(8) Complies with VESA DDC1/2B specifications

(9) Auto-adjustment function

Contents

Page

Before use 3
Contents of shipping box.....8
Names and functions of each part ..8
Installation 12
Basic operations 13
Adjustments and functions 16
Connection to the video signal terminals 20
Connection to the RGB signal terminal 20
Connection to the control signal terminal.....23
Example of system setup 28
Cleaning the air filter 29
Lamp 30
Message table.....31
When you think something wrong ..32
Specifications 33

⚠ FOR THE CUSTOMERS IN U.K

THIS PRODUCT IS SUPPLIED WITH A TWO PIN MAINS PLUG FOR USE IN MAINLAND EUROPE. FOR THE U.K PLEASE REFER TO THE NOTES ON THIS PAGE.

IMPORTANT FOR UNITED KINGDOM

WORDING FOR CLASS I EQUIPMENT INSTRUCTION BOOKS AND LABELS

The mains lead on this equipment is supplied with a moulded plug incorporating a fuse, the value of which is indicated on the pin face of the plug. Should the fuse need to be replaced, an ASTA or BSI approved BS 1362 fuse must be used of the same rating. If the fuse cover is detachable never use the plug with the cover omitted. If a replacement fuse cover is required, ensure it is of the same colour as that visible on the pin face of the plug. Fuse covers are available from your dealer.

DO NOT cut off the mains plug from this equipment. If the plug fitted is not suitable for the power points in your home or the cable is too short to reach a power point, then obtain an appropriate safety approved extension lead or consult your dealer.

Should it be necessary to change the mains plugs, this must be carried out by a competent person, preferable a qualified electrician.

If there is no alternative to cutting off the mains plug, ensure that you dispose of it immediately, having first removed the fuse, to avoid a possible shock hazard by inadvertent connection to the mains supply.

WARNING: THIS EQUIPMENT MUST BE EARTHED

IMPORTANT:

The wires in the mains lead are coloured in accordance with the following code:

Green and Yellow=Earth, Blue=Neutral, Brown=Live.

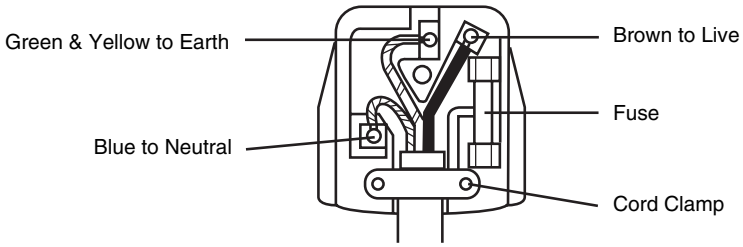

As these colours may not correspond with the coloured makings identifying the terminals in your plug, proceed as follows:

The wire which is coloured Green and Yellow must be connected to the terminal in the plug which is marked with the letter E or by the earth symbol ⏚ or coloured Green or Green and Yellow.

The wire coloured Blue must be connected to the terminal marked with the letter N or coloured BLUE or BLACK. The wire coloured BROWN must be connected to the terminal marked with the letter L or coloured BROWN or RED.

WARNING:This equipment has been tested and found to comply with the limits for a Class A digital device, pursuant to Part 15 of the FCC Rules. These limits are designed to provide reasonable protection against harmful interference when the equipment is operated in a commercial environment. This equipment generates, uses, and can radiate radio frequency energy and, if not installed and used in accordance with the instruction manual, may cause harmful interference to radio communications, Operation of this equipment in a residential area is likely to cause harmful interference in which case the user will be required to correct the interference at his own expense.

ENGLISH

Instructions to Users:

This equipment complies with the requirements of FCC (Federal Communication Commission) Class A equipments provided that following conditions are met.

(1) Video signal cables:

Double shielded coaxial cables (so called FCC shield cable) must be used and the outer shield must be connected to the ground. Or, if normal coaxial cables are used, the cables must be enclosed in metal pipes or similar way to reduce the interference noise radiation.

(2) Power cord:

Shielded power cord must be used. The outer shield must be connected to the ground.

(3) Video inputs:

The input signal amplitude must no exceed the specified level.

Before use

(Before Use)

Illustrated marks — Various illustrated marks are used in this product and instruction manual so the product is used correctly and safely, and also to protect you and others from danger and your property from being damaged.

Warning — This shows that a person could be killed or injured if the wrong operation is done by ignoring this indication.

Caution — This shows that a person could be injured or material may be damaged if the wrong operation is done by ignoring this indication.

Examples of illustrated marks

The △ mark informs you that there is a warning (including caution). The concrete details of the warning (the left diagram shows the caution for an electric shock hazard) is shown in the diagram.

The ⃠ mark informs you of a prohibited action. The concrete prohibited action (the left diagram shows the prohibition of disassembly) is drawn in the diagram or near it.

The ● mark informs you of actions you must do. The concrete instruction details (the left diagram shows "Disconnect the power plug from the power outlet") is drawn in the diagram.

[Safety precaution]

⚠ Warning

■ If any abnormality occurs.

- When there is an abnormal smell or smoke, if you use this unit as it is, this could cause a fire or electric shock, etc. When an abnormality is found, immediately turn off the power switch and pull out the power plug from the power outlet. Check that there is no smoke, etc., then contact your dealer to repair the unit. Do not repair it yourself as it is very dangerous.
- Do not use this unit as it is after trouble has occurred, such as "No picture", "No sound", "Abnormal sound", etc. This may cause a fire, electric shock, etc. In this case immediately turn off the power switch and disconnect the power plug, then contact your dealer to repair the unit.

Pull out the power plug from the power outlet.

- If water, etc. enters inside the unit, turn off the power switch of the unit first and disconnect the power plug and then contact your dealer. If you use it as it is, it may cause a fire, electric shock, etc.

■ Do not install this unit in an unstable place.

Avoid placing it in an unstable place such as weak base, inclined floor, etc. This may cause it to drop or fall over, resulting in injury.

■ Do not open the cabinet.

Do not open the cabinet. There are high voltage parts inside the cabinet and this may cause an electric shock. Ask your dealer to check inside and adjust and repair the unit.

Electric shock hazard

Prohibition of disassembly

■ Do not use this in a bathroom, etc.

Do not use this unit in a bathroom, etc. This may cause a fire, electric shock, etc.

Do not use near water

■ Do not look directly at the lens when the lamp is lit.

Do not look directly at the lens when the lamp is lit. Since a strong light is used, it could damage you vision, etc. Especially pay attention if children are present.

■ Do not insert any foreign object.

- Do not insert a metal or flammable object inside through the ventilation holes, etc. This may cause a fire, electric shock, etc.

- If foreign matter enters inside, turn the power switch off and disconnect the power plug from the power outlet and contact your dealer. If you use as it is, it may cause a fire, electric shock, etc. Be careful especially if children could touch the unit.

Pull out the power plug from the power outlet.

■ Do not apply any shock.

If you drop this unit or if the cabinet is broken, turn off the power switch, disconnect the power plug and contact your dealer. If you use it as it is, it may cause a fire, electric shock, etc.

Pull out the power plug from the power outlet.

■ Do not remodel this unit.

Do not remodel this unit. It may cause a fire, electric shock, etc.

Prohibition of disassembly

■ Do not put a container, etc. with liquid on this unit.

Do not put a vase, flowerpot, cosmetic container, medicine or water and small metal objects on this unit. If liquid spills and enter inside the unit, it may cause a fire, electric shock, etc.

■ Do not use power supplies other than that specified.

Do not use this unit with a power voltage other than specified power supply voltage. It may cause a fire, electric shock, etc.

⚠ Warning

ENGLISH

■ High temperatures are generated when the lamp is lit, so do not place objects in front of the lens.

■ Be careful in handling the power cord.

- Do not scratch, damage or process the power cord. Do not bend it forcibly. Also do not put a heavy object on it, do not heat it and do not pull it. If you do, the power cord may be damaged and it may cause a fire, electric shock, etc.
  - · Do not pull the cord.
  - · Do not put a heavy object on it.
  - · Do not damage the cord.
  - · Do not put it near a heating device.
- Be careful that this unit is not placed on the power cord. The power cord may be damaged and it may cause a fire, electric shock, etc. If the cord is covered with a carpet, etc. a heavy object may be put on it without your realizing it.
- If the cord is damaged (core wire is exposed, disconnected, etc.), ask your dealer to replace it. It may cause a fire, electric shock, etc.
- Check that no dirt adheres to the power plug and fully insert without any play. If dirt adheres or the connection is incomplete, it may cause a fire, electric shock, etc.
- The outer shield of power cord must be connected to ground.
  If you do not, it may cause a electric shock.

■ Do not stare directly into the laser aperture.

- The laser pointer on the remote control unit radiates the laser beam from the laser aperture.
- Do not stare into the laser aperture or radiate the laser beam to other persons as the laser emitted is a class 2 laser and it could damage you vision , etc.
  Especially pay attention if children are present.
- The three labels below are caution labels for the laser beam.

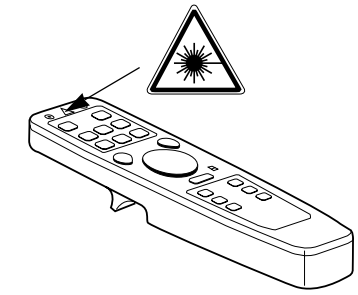

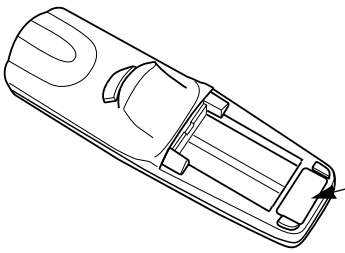

LASER RADIATION
DO NOT STARE INTO BEAM
CLASS 2 LASER PRODUCT
WAVE LENGTH : 670nm
MAX. OUTPUT : 1mW
IEC60825-1 : 1993 + A1 : 1997

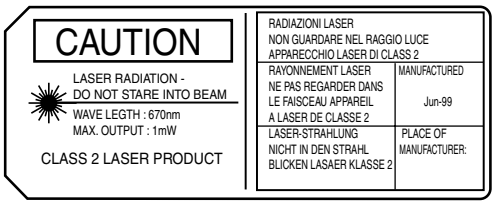

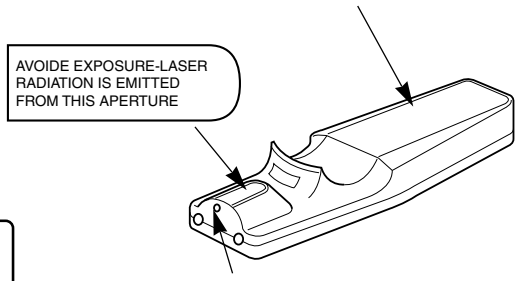

LASER APERTURE

⚠ Caution

■ Do not step on this unit or do not put a heavy object on it.

- Do not step on this unit. Especially pay attention if children are present. If you do, the unit may fall over or may be broken causing an injury.
- Do not put a heavy object on this unit. If you do, the unit may fall due to its imbalance or it may drop, causing an injury.

■ Do not block the ventilation holes.

Do not block the ventilation holes. If the ventilation holes are blocked, the heat inside may build up and it may cause a fire. Do not use this unit in the following ways: On its side. In a poorly ventilated, narrow place. On a carpet or bedspread. Covered with a tablecloth. Place this unit so that the ventilation holes are kept 30cm or more away from the wall.

■ Cleaning

Pull out the power plug from the power outlet.

Be sure to pull out the power plug from the power outlet for safety when cleaning.

■ Set the caster stoppers.

When this unit is installed on the table with casters, set the caster stoppers. If the table moves, it may fall over, causing an injury.

■ Do not place this unit in a moist or dusty place.

- Do not place this unit in a moist or dusty place. It may cause a fire, electric shock, etc.
- Do not place this unit where it would be exposed to soot or steam, near a cooking stove or humidifier, etc. It may cause a fire, electric shock, etc.

■ Handle the power cord carefully.

- Do not bring the power cord near a heating device. The shield of the cord may melt and it may cause a fire, electric shock, etc.

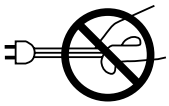

- Do not insert / disconnect the power plug with wet hands. It may cause an electric shock.
- When the power plug is to be disconnected, do not pull the power cord. The power cord may be damaged and it may cause a fire, electric shock, etc. Be sure to hold the power plug.

■ Caution when carrying it.

Pull out the power plug from the power outlet.

When this unit is to be moved, apply a cover to the lens and be sure to disconnect the power plug from the power outlet and check that all external connection cords are removed before moving it. If not, the cord may be damaged and it may cause a fire, electric shock, etc.

⚠Caution

■ Use of batteries.

- Do not use batteries not specified for this unit. Do not use new batteries mixed together with old ones. This may cause a fire, injury due to burst of battery, liquid leakage.
- When inserting batteries in this unit, pay attention to the direction of the ⊕ and ⊖ polarity indications and insert the batteries correctly. If the polarities are confused, it may cause injury or damage near the unit due to burst batteries, liquid leakage, etc.

■ When you are not going to use for a long time.

When you are not going use this unit for a long time because you are going on a trip, etc., be sure to pull out the power plug from the power outlet for safety. And also apply cover to the lens so that the lens is not damaged.

Pull out the power plug from the power outlet.

■ Clean inside the unit at least once two years.

Ask your dealer to clean inside the unit at least once two years. If the unit is left with too much dust inside as it is for a long this without cleaning, it may cause a fire. Especially it is effective to clean before the rainy season starts. Consult your dealer for the cost of the cleaning the inside the unit.

■ Caution when replacing the lamp.

- When replacing the lamp, turn off the power of the projector and disconnect the power plug from the power outlet. Then wait for 45 minutes to allow the lamp cool: Failure to do so could result in a burn.
- For disposal of used lamp, treat according to the instruction of community authorities.
- Since the lamp is made of glass, do not apply shock to it and do not scratch it.
- Also, do not use old lamp. This could also cause explosion of the lamp.
- If it is probable that the lamp has exploded (explosive sound is heard), disconnect the power plug from the power outlet and ask your dealer to replace lamp. The lamp is covered by front glass and air-tight structure, but, in rare cases, the reflector and the inside of the projector may be damaged by scattered broken pieces of glass, and broken pieces could cause injury when being handled.
- When the lamp has been replaced, reset the accumulated operation time of the lamp. Do not reset if the lamp has not been replaced.

Pull out the power plug from the power outlet.

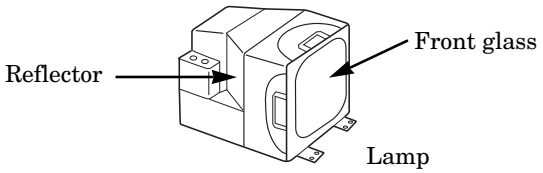

[General cautions]

■ Do not place this unit where it gets hot.

Be careful since if you place the unit outdoors, in a place exposed to direct sunlight or near a heating device, the cabinet and parts could be affected.

■ Volume.

Use at the proper volume level so that it does not bother persons in the neighborhood. Especially, since the sound is likely to carry well at the night even at a low volume, consider the neighborhood to a good living environment.

■ Cleaning the lens.

To clean the lens, use a generally-available lens cleaning tissue (used for cleaning lens of camera, glasses, etc.). Be careful not to scratch the lens with a hard object.

■ Cleaning the cabinet.

- Since many plastic materials are used on the surface of the cabinet, if the surface is cleaned using benzene, thinner, etc., it may change in quality or the coating may be peeled off. Avoid using chemicals.
- When a chemically-teated cloth is used, follow the cautions that come with the cloth.
- Do not spray a volatile agent such as insecticide on the unit. Do not leave a rubber or vinyl object touching the cabinet for a long time. It may cause the cabinet to change in quality or the coating to peel off.
- Clean the dirt from the cabinet and operation panel by dusting lightly with a soft cloth. If the dirt is conspicuous, wipe off with a cloth moistened with detergent diluted with water, then wipe off with a dry soft cloth.

■ Rest your eyes occasionally when viewing for a long time.

Contents of shipping box

Check that the carton contains the following items.

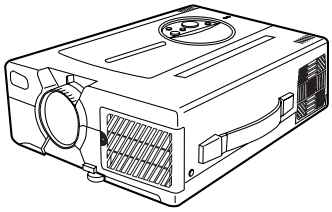

Liquid Crystal Projector

Remote Control Transmitter
(batteries included)

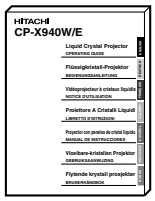

Operating Guide

Power Cord
110V - US
220 - UK, Europe

3-Conductor
Video/Audio Cable

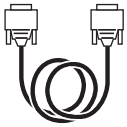

RGB Cable
(15-15 pin M/M)

Mac adapter
with dip switch

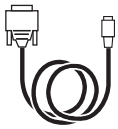

Mouse cable ×3

Names and functions of each part

Main unit

STANDBY / ON button
Power ON/OFF button.
OFF sets the unit in standby mode.
(see page 13~14)

MUTE button
Silences the sound. (Cancels the mute when the unit is set in mute mode.)

RESET button
Resets unit to factory settings.
(See page 16)

LAMP indicator
This lights or blinks when the lamp does not light. (See page 32)

ON indicator
This blinks in the standby mode and lights in the operation mode.(See page 32)

INPUT button
To select the input source.
Each time this button is pressed, the input source is changed in sequence as shown below.(See page 13)

RGB1 → RGB2 → VIDEO

MENU button
Picture adjustments.
Refer to page 16~19 for details.

TEMP indicator
This lights or blinks when temperature inside the projector is too high or when fan is abnormal.(See page 32)

ZOOM knob
Adjusts picture size.
(See page 13)

Remote control sensor

Lens

Lens cap

Speaker

Speaker

Cooling fan
(exhaust)

Handle

Cooling fan
(in take)

FOCUS ring
Adjusts focus. (See page 13)

- Use the remote control transmitter within the range of about 16 feet from the remote control sensor and within 30° to both the left and right.

Names and functions of each part (continued)

ENGLISH

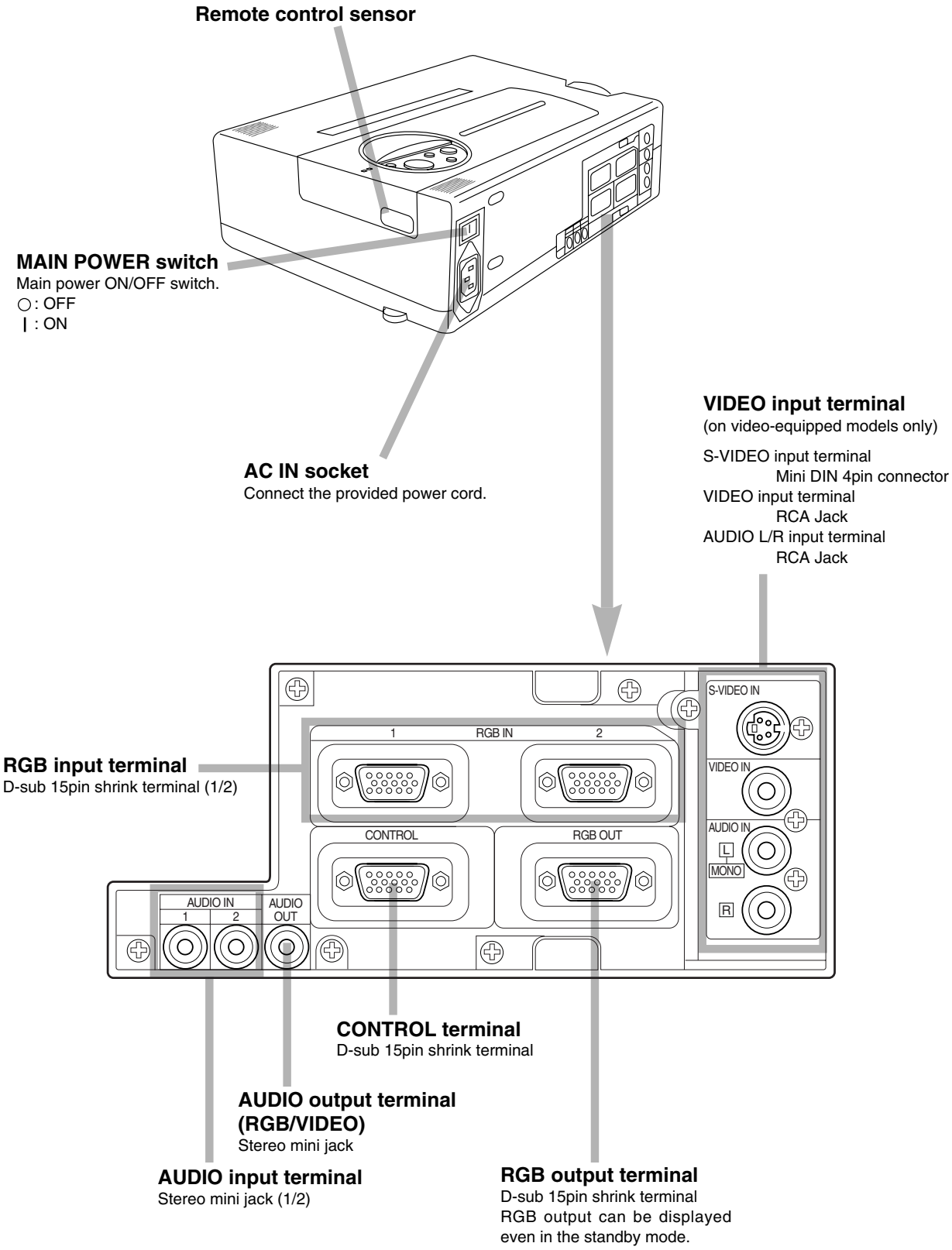

Names and functions of each part (continued)

Remote control transmitter

STANDBY / ON button
Power ON/OFF button.
OFF sets the unit in standby mode.
(See page 13, 14)

FREEZE Button
Pressing this button displays a still picture (by freezing). (See page 15)

MAGNIFY button
Pressing this button partially magnifies a displayed picture. (See page 15)

POSITION button
Moves the picture by DISK PAD after pressed the POSITION ON button.
(Only RGB signal input)
While the back light on, you can operate POSITION. *1

DISK PAD
① When the back light of MENU ON button on, selects or adjusts the menu item. (See page 16)
② When removes the on-screen menus, works as mouse.
③ When the back light of the POSITION ON button on, moves picture. *2

MENU ON button
Displays the on-screen menus.
And back light on. (See page 16 ~ 19)
While the back light on, you can operate MENU.

BLANK ON button
① The blank screen which is displayed by pressing BLANK.
② And the blank screen will be revealed down by pressing BLANK again.
(See page 19)

INPUT SELECT button
Selects the input source. (See page 13)

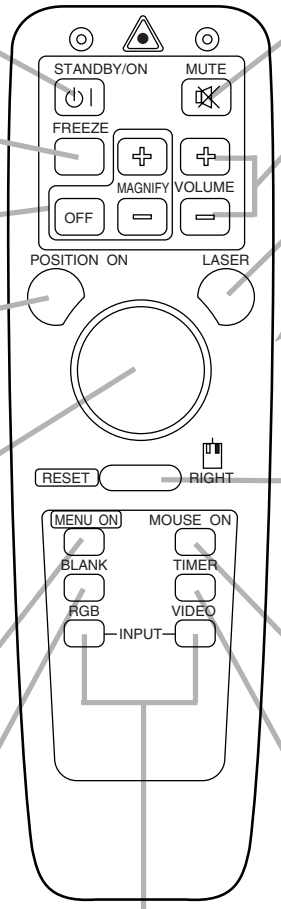

MUTE button
Silences the sound. (Cancels the mute when the unit is set in mute mode.)

VOLUME button
Adjusts volume. The sound is loud or low while pressing the "+" or "-" button.

LASER button
Laser pointer ON button. Use as a stick (for indication). (See page 11)

MOUSE LEFT button
Mouse left button is the left click of the mouse. (bottom button) (See page 23)

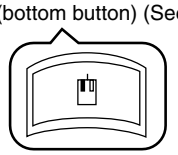

RESET / RIGHT button
When displays the on-screen menus, resets the menu item to factory settings.
When operates the mouse emulation, works as right click of mouse in computer mode.
(See page 23)
After moving the picture (POSITION ON), resets the position to factory settings.

MOUSE ON button
Mouse emulation mode starts.
(See page 23)
When menu are open or blank screen is displayed or icon of position is displayed, there are stopped and back light off.

TIMER ON / OFF button
Displays the setting time by count down.
See page 18 "TIMER" of menu when you set the minutes of timer.

***1 POSITION ON icon**
When presses POSITION ON button, back light on and icon is displayed.
While displaying the icon, you can operate POSITION.
Icon is displaying in video mode, but can not operate POSITION.

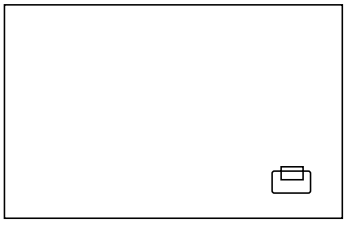

***2**
When the back light of MENU ON or POSITION ON button on without displaying the icon of POSITION ON or MENU, can operate DISK PAD too.
Displays the icon or MENU at the same time as starting the operation.
When presses the MOUSE ON button, MENU mode or POSITION ON mode is stopped.

Names and functions of each part (continued)

ENGLISH

How to insert batteries

Insert the provided batteries (LR6 (alkal) into the remote control transmitter.

1 Remove the battery compartment cover.

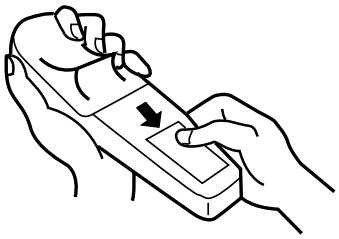

Slide the battery compartment cover in the direction of the arrow while pressing slightly down on it.

2 Insert the batteries as illustrated inside the battery compartment.

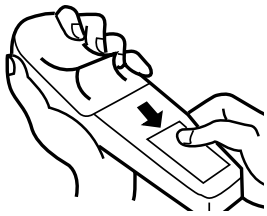

3 Replace the cover.

⚠ Caution Cautions on use of batteries

- Do not use batteries not specified for this unit. Also do not use old and new batteries together. It may cause a fire, injury due to burst of battery or liquid leakage.
- When inserting batteries, pay attention to the direction of the ⊕ and ⊖ polarity indications and insert the batteries correctly. If the polarities are confused, it may cause injury or damage near the unit due to a burst of battery or liquid leakage.

Caution Cautions on use

- Do not drop the remote control transmitter or apply any shock to it.
- Do not let the remote control transmitter get wet and do not put it on a wet object. It may cause a malfunction.
- If you are not going to use it for a long time, remove the batteries from the remote control transmitter.
- If operation of the remote control becomes difficult, replace the batteries.

⚠ Caution Cautions on use of the laser pointer.

- The laser pointer on the remote control unit radiates the laser beam from the laser aperture.
- This laser pointer used as a stick (for indication).
  Do not stare directly into the laser aperture or radiate the laser beam to other persons as the laser emitted is a class II laser and it could damage you vision , etc.
  Especially pay attention if children are present.
- The three labels below are caution labels for the laser beam.

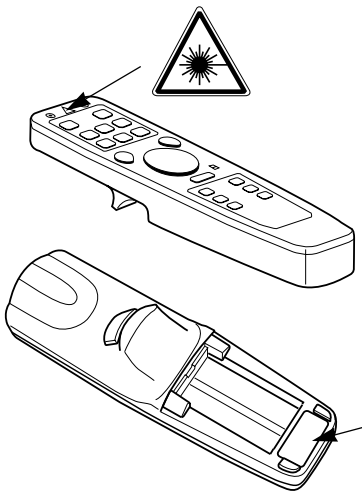

LASER RADIATION
DO NOT STARE INTO BEAM
CLASS 2 LASER PRODUCT
WAVE LENGTH : 670nm
MAX. OUTPUT : 1mW
IEC60825-1 : 1993 + A1 : 1997

CAUTION
LASER RADIATION -
DO NOT STARE INTO BEAM
WAVE LEGTH : 670nm
MAX. OUTPUT : 1mW
CLASS 2 LASER PRODUCT

RADIAZIONI LASER
NON GUARDARE NEL RAGGIO LUCE
APPARECCHIO LASER DI CLASS 2

RAYONNEMENT LASER
NE PAS REGARDER DANS
LE FAISCEAU APPAREIL
A LASER DE CLASSE 2

MANUFACTURED
Jun-99

LASER-STRAHLUNG
NICHT IN DEN STRAHL
BLICKEN LASAER KLASSE 2

PLACE OF
MANUFACTURER:

AVOIDE EXPOSURE-LASER
RADIATION IS EMITTED
FROM THIS APERTURE

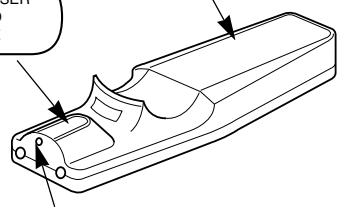

LASER APERTURE

Installation

Example of the projector and screen installation

Determine picture size and projection distance as illustrated below.

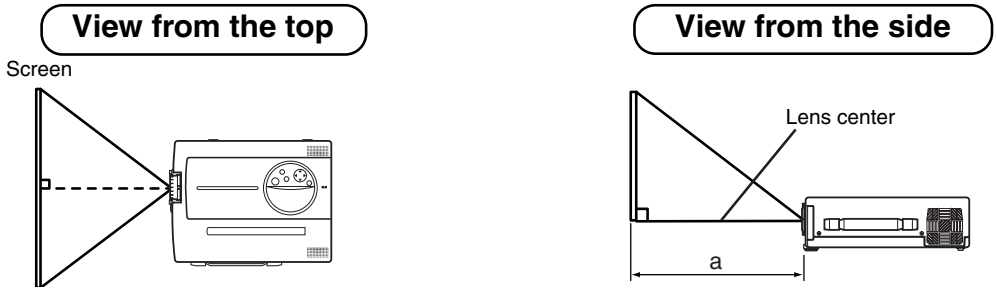

Screen (inch)	a (inch)	
	Minimum	Maximum
40	64	84
60	97	127
80	130	169
100	163	213
120	196	256
150	244	319
200	326	———

a:Distance from the projector to the screen.
(tolerance : ±10%)

This screen size is full-screen size.(1024 dots X 768 dots)

Installation of liquid crystal projector

Please basically use liquid crystal projector at the horizontal position.
If you use liquid crystal projector by the lens up position, the lens down position and the side up position, this may cause the heat inside to build up and become the cause of damage.
Be especially careful not to install it with ventilation holes blocked.

How to use foot adjusters

Adjust the projection position using the foot adjusters at the bottom of the projector.

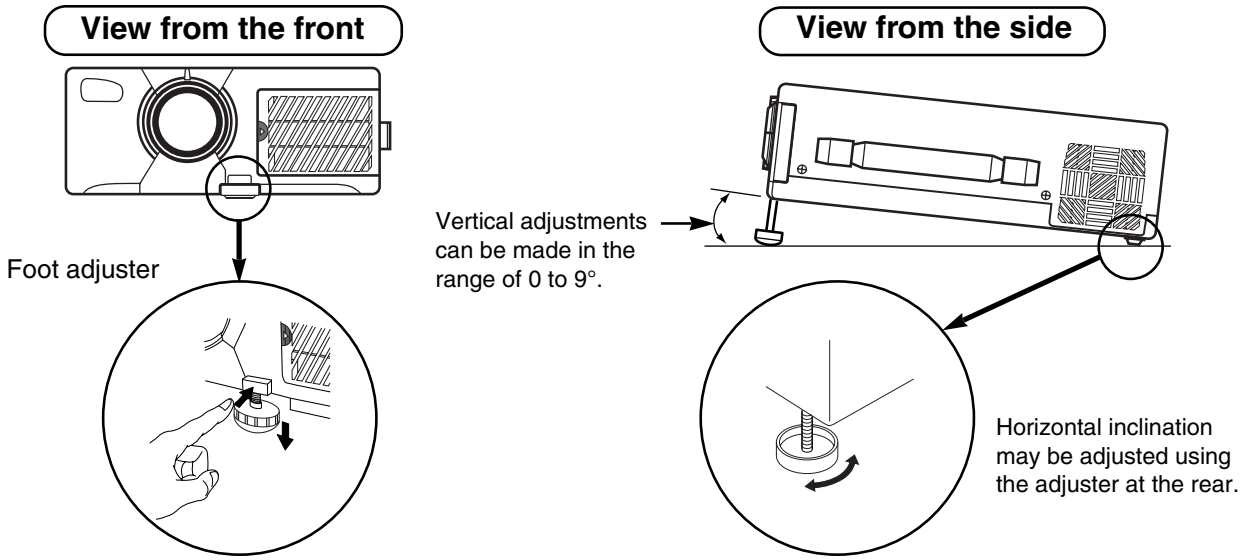

1. Lift up the projector and press the button of the adjuster to release the lock.
2. Adjust the projection angle, release the button of the adjuster and securely lock it.
3. To adjust the angle slightly, revolve the foot adjusters.

⚠ Caution

- Do not unlock the foot adjusters while you do not support the projector, to avoid falling of the projector and causing an injury.
- Do not revolve the foot adjusters by force, the foot adjusters is damaged.
- Securely lock the adjuster.
- Do not apply unnecessary force from the upper side when lifting the projector. Otherwise, projector may be damaged or a finger could be caught and cause injury.

Basic operations

To project the picture

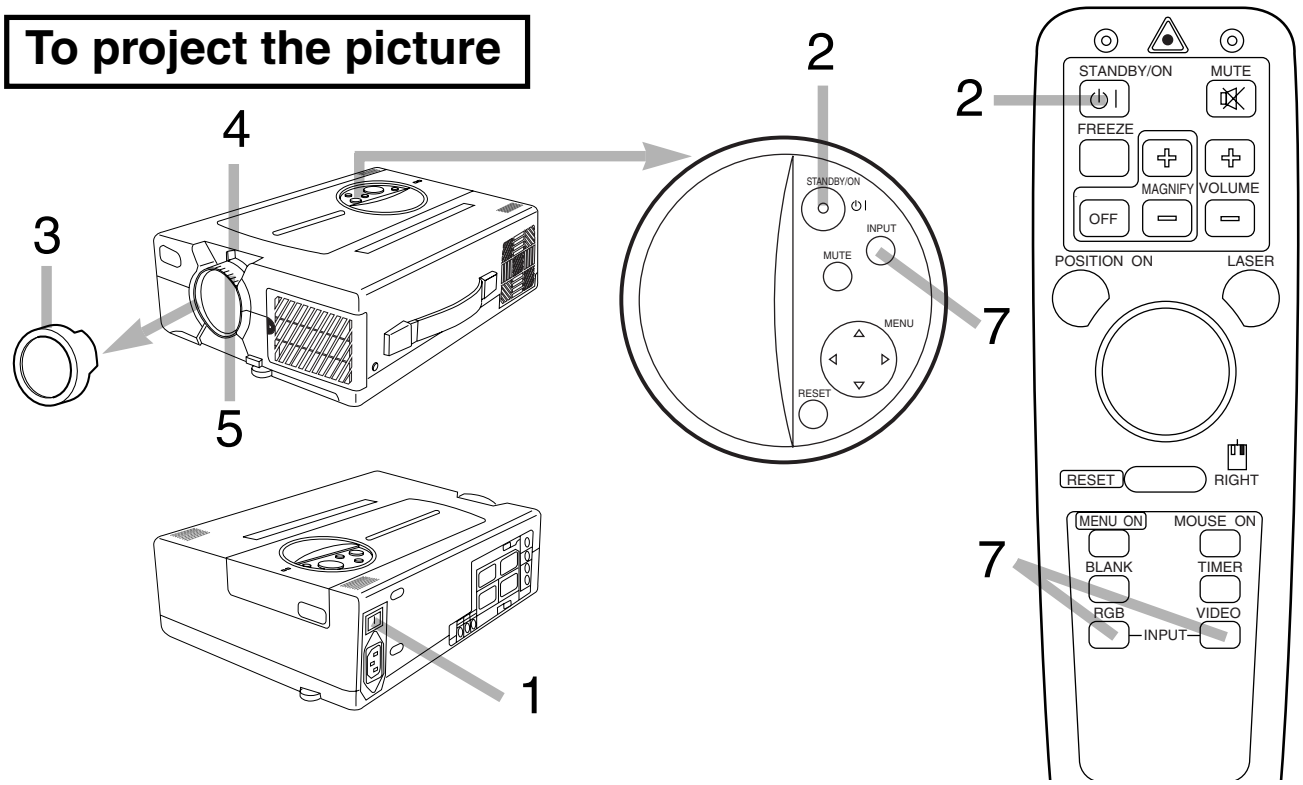

ENGLISH

1 **Turn the MAIN POWER switch of the projector on.[I : ON]**

- The ON indicator will light up orange.

2 **Press the STANDBY/ON button.**

- The ON indicator blinks (green) during warm-up and then lights (green).
- Power cannot be turned on even if the STANDBY/ON button is pressed within 60 seconds after power is turned off, since the lamp has cooled preparing for next lighting.

3 **Remove the lens cap.**

4 **Adjust picture size using the projection lens ZOOM knob.**

5 **Adjust focus using the projection lens FOCUS ring.**

6 **Power on all connected equipment.**

The method of connecting various equipment, see on the page 20~28.

7 **Press the INPUT button or the INPUT SELECT (VIDEO or RGB) button to select the source of the signal to be projected on the screen.**

- The selected signal input is displayed at the bottom right of the screen for 3 seconds.

Example on-screen display

RGB1

Basic operations (continued)

To turn off the power

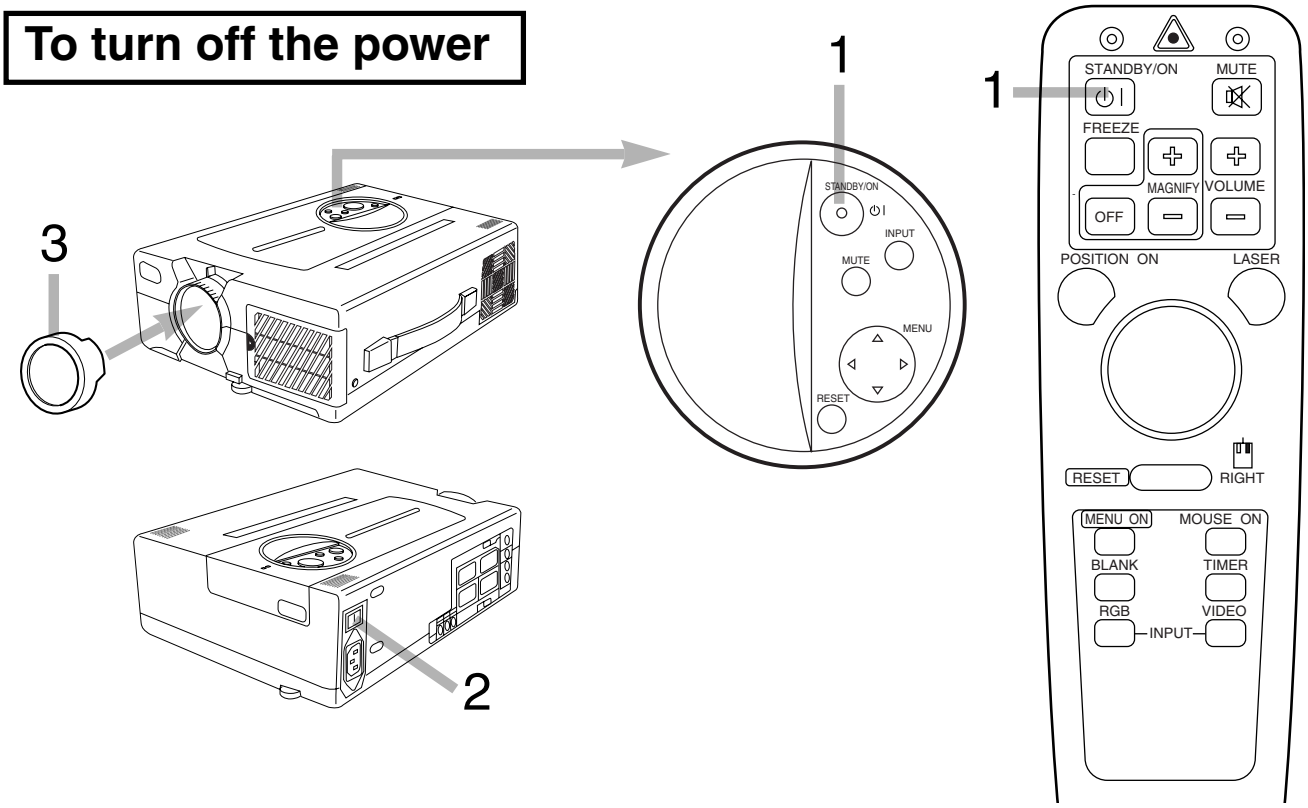

1 Press the STANDBY/ON button, for 1 second.

- The ON indicator blinks orange and the lamp turns off. (About 1 minute later), the fan stops and the indicator lights up orange.
- Press the STANDBY/ON button for short time (less than 1 second), the projector do not set in standby mode.

2 Turn the MAIN POWER switch of the projector off.[◯: OFF]

3 Install the lens cap.

Caution

- To reduce temperature inside the projector, fan will rotate for about 1 minute after the lamp is turned off.
- Do not turn off the MAIN POWER switch during the lamp on because the lamp is damaged.

PLUG&PLAY

This projector complies with VESA DDC1/2B specifications. PLUG&PLAY is a system with computer, peripherals (including projectors), and operating system.

It works when the projector is connected to DDC (Display Data Channel) ready computer that is running an operating system software that incorporates plug & play functionality.

(Only RGB 1)

Basic operations (continued)

FREEZE FUNCTION

This function can display a still picture (by freezing). This function can be used in combination with a MAGNIFY function.

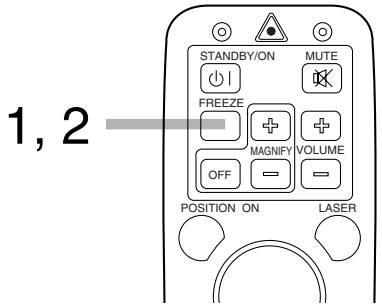

1 Press the FREEZE button.

The display image stops. A ❚❚ mark appears at the lower right of the screen for about 3 seconds during the FREEZE function.

[TO RELEASE FREEZE]

2 Press the FREEZE button.

The freeze function is cancelled. Furthermore, a ▶ mark appears at the bottom of the screen for 3 seconds or so when FREEZE is released.

Caution
- Note: When the FREEZE Button is pressed, FREEZE and RELEASE can function alternately.
- What is more, FREEZE is released when an input selector button is pressed or when the display mode of a personal computer is switched over during display.
- The POSITION ON icon is not displayed during freeze. Also, scrolling using DISK PAD operation is not possible.
- When a still picture signal is given as input and the freeze function is ON, do not forget to cancel the freeze function.

MAGNIFYING FUNCTION

It is possible to display a partially magnified picture. This function can be used in combination with a FREEZE function.

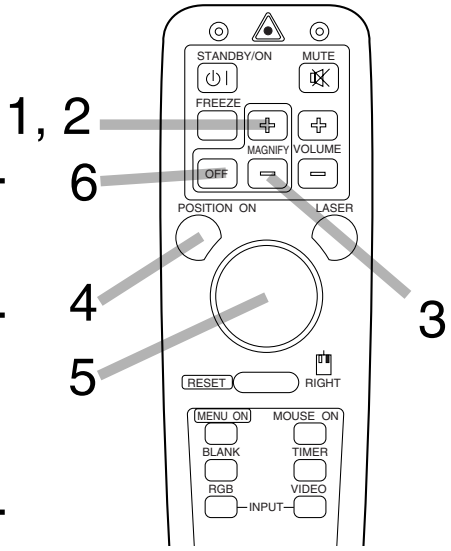

1 Press the MAGNIFY + button.

- By doing so, the center of the picture can be magnified as one part, becoming double in size.

[TO CHANGE MAGNIFICATION]

2 Press the MAGNIFY + button.

- When the button is pressed, more magnification of display takes place. (Maximum about 4 times)

3 Press the MAGNIFY - button.

- When the button is pressed, the magnified display reduces its size. (Minimum about 1.1 times)

[TO SHIFT DISPLAY AREA]

4 Press the POSITION ON button.

5 Press the DISK PAD button up and down and left and right.

- The magnified display area shifts in the direction the button is pressed.

[TO RETURN TO NORMAL DISPLAY]

6 Press MAGNIFY OFF button.

Caution
Note: The MAGNIFY function is released when an input selector button is pressed or when the display mode of a personal computer is switched over during display.

ENGLISH

Adjustments and functions

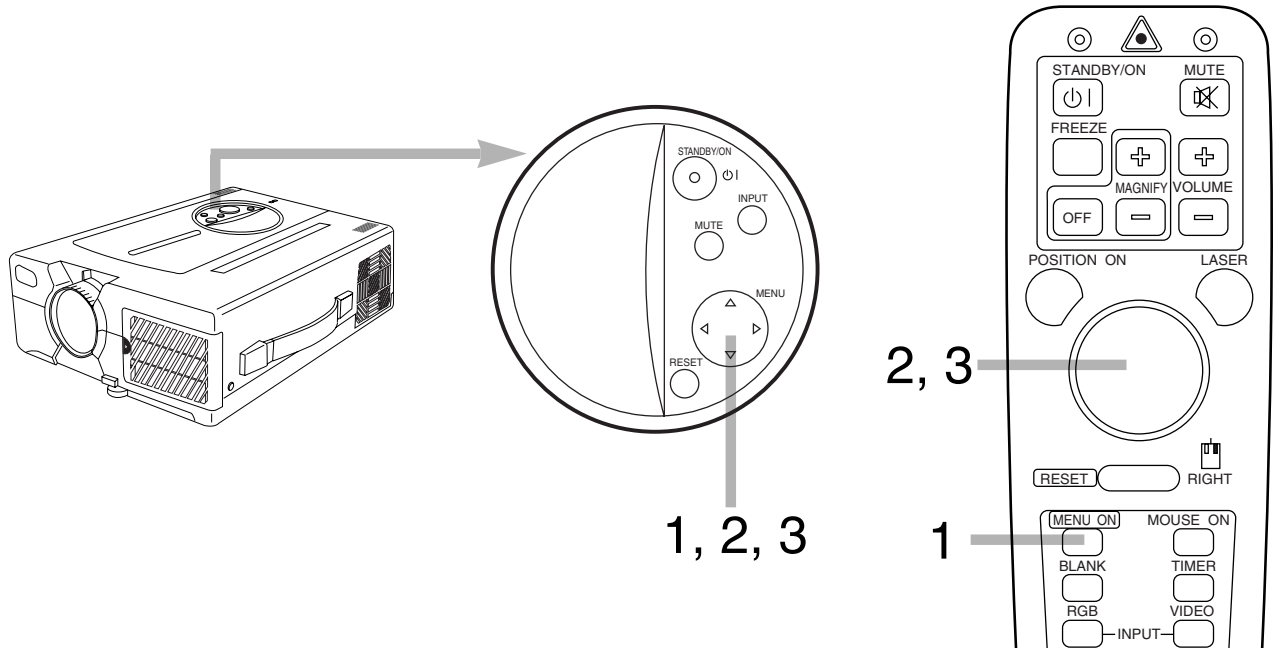

1 Press the MENU (▲ ▼ ◀ ▶) buttons or the MENU ON / OFF button.

• On-screen menus are displayed on the screen.

2 Select the menu to be adjusted using the MENU (◀ ▶) buttons or DISK PAD.

• Menu displayed in green is selected.

3 Select the item to be adjusted using the MENU (▲ ▼ ◀ ▶) buttons or DISK PAD.

• Item displayed in green can be adjusted.

When no operation is done for about 5 ~ 10 seconds, menu screen will go off.

Memory function

Individual memory functions are provided for the VIDEO, RGB1 and RGB2 input terminals. Adjustments are saved after power off.

To return to the initial setting

• Resetting menu items (SETUP, INPUT, IMAGE, OPT.)

(1) Select the menu item to return to the initial setting.

(2) Press the RESET button.

(3) Select the DEFAULT (To select the CANCEL is not changed). (Display shown on the right will appear.)

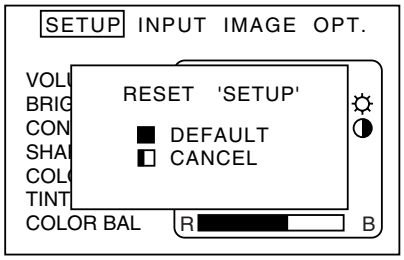

• Resetting adjustment items (VOLUME, BRIGHT etc.)

(1) Select the adjustment item to return to the initial setting.

(2) Press the RESET button.

Adjustments and functions (continued)

ENGLISH

SET UP

The menu SET UP serves for the change of parameters influencing the picture and for the move picture position.

RGB signal input

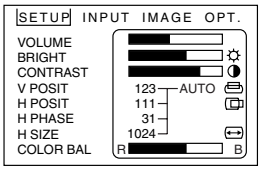

VIDEO signal input

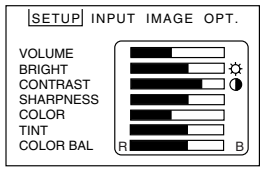

Adjustment Item	Details of adjustment	Freeze	Magnify	Freeze & Magnify
VOLUME	Decrease ←→ Increase	○	○	○
BRIGHT (BRIGHTNESS)	Dark ←→ Bright	○	○	○
CONTRAST	Lower ←→ Higher	○	○	○
SHARPNESS	Soft ←→ Sharp	×	○	×
COLOR	Less ←→ More	×	○	×
TINT	Red ←→ Green	×	○	×
V.POSIT (V.POSITION)	Moves the picture up or down. Or automatic control.	×	×	×
H.POSIT (H.POSITION)	Moves the picture left or right. Or automatic control.	×	×	×
H.PHASE	Decreases the picture flicker. Or automatic control.	×	○	×
H.SIZE	Widens of Narrow the horizontal size of the picture. Or automatic control.	×	×	×
COLOR BAL (COLOR BALANCE)	for Red ←→ for Blue	○	○	○

○: operation is possible. ×: operation is not possible.

How to use the SET UP menu

1. Bar display items (VOLUME, BRIGHT etc.)
   Move the green cursor to the item you wish to adjust, then move the MENU buttons on the unit, or the DISK PAD, to left and right to adjust the length of the bar display. Some items can not be adjusted during freeze or during magnify. (Please refer to the above table.)
2. Numerical display items (V POSIT, H POSIT etc.)
   Use either manual operation or auto-adjustment. Some items can not be adjusted during freeze or during magnify. (Please refer to the above table.)

< Manual Operation >

Adjust optional items manually.

(1) Use the MENU buttons on the unit or the DISK PAD on the remote control to move the green cursor to the number of the item you wish to adjust.

(2) With the green cursor on the number, use the MENU buttons on the unit or the DISK PAD on the remote control to raise or lower the value.

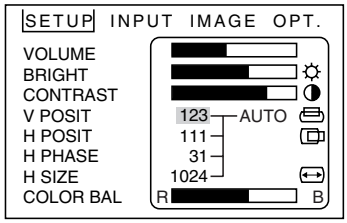

Adjustments and functions (continued)

< AUTO-adjustment >

The projector will automatically adjust four items (V POSIT, H POSIT, H PHASE, H SIZE, White level). When AUTO is selected (the cursor is moved from Manual Operation towards the right) the AUTO Confirm screen shown below will be displayed.

< AUTO-adjustment Confirm Screen >

While the AUTO confirmation screen is displayed as illustrated on the upper right, if you shift the cursor upward and select AUTO, the projector will perform auto-adjustment.
It will become as illustrated on the lower right.
If CANCEL is selected for three seconds, or if the RESET button on either the unit or the remote control is pressed, the green cursor will return to the value for the selected item (Manual Operation)

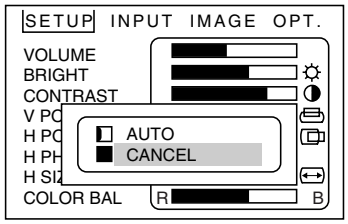

< During AUTO-adjustment >

At the lower right of the screen the word <AUTO> will flash in green letters.
When the auto-adjustment is completed the word <AUTO> will disappear.
The auto-adjustment of the white level is cancelled by input switching and signal mode change.

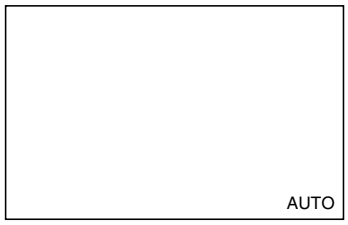

Caution

- When start up screen is displayed ("NO INPUT IS DETECTED" or "SYNC IS OUT OF RANGE" is displayed), SETUP menu items other than VOLUME cannot be set.
- TINT cannot be adjusted with PAL/SECAM video signal input.
- TINT, COLOR and SHARPNESS cannot be adjusted with an RGB signal input.
- V.POSIT, H.POSIT, H.PHASE and H.SIZE cannot be adjusted with a VIDEO signal input.
- Auto-adjustment will take about 10 to 15 seconds to complete.
- In some cases auto-adjustment may not function normally, depending on the type of computer to which the unit is connected, and the signal sent.
- Auto-adjustment may not perform normally with some images. Do not use with animated or dark images.
- Carry out the auto-adjustment when the application, which is activated on the computer, is set to the maximum display.
- After auto-adjustment the screen may become slightly dark due to the auto-adjustment of the signal level.
- Auto-adjust can not be performed during freeze, during magnify, or during the initial screen display ("NO INPUT IS DETECTED" or "SYNC IS OUT OF RANGE").

INPUT

The menu INPUT serves for the selection of input source.

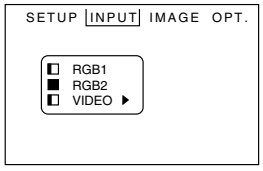

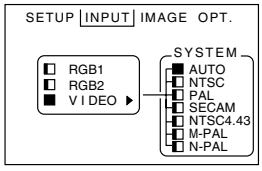

Adjustment Item	Details of adjustment
RGB 1	Selects the RGB 1 terminal.
RGB 2	Selects the RGB 2 terminal.
VIDEO	Selects the VIDEO terminal.
SYSTEM	Selects the video signal systems. In normal circumstances, select AUTO. AUTO does not support N-PAL. When the picture (Video) is abnormal (no color), selects the input signal mode (NTSC, PAL, SECAM, NTSC4.43 M-PAL and N-PAL). To input N-PAL signals, select N-PAL.

Adjustments and functions (continued)

IMAGE

The menu IMAGE serves of the picture inversion.

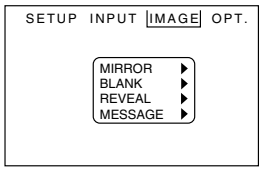

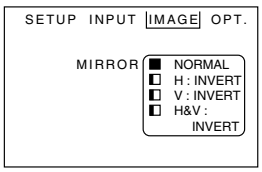

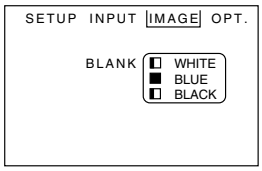

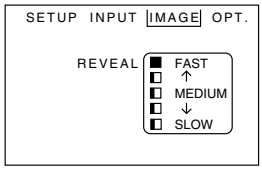

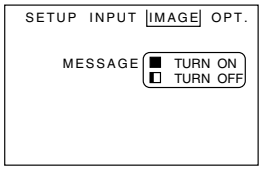

Adjustment Item	Details of adjustment
MIRROR	Inverts the picture horizontally or vertically. NORMAL Not invert. H:INVERT Inverts the picture horizontally. H:INVERT Inverts the picture vertically. H&V:INVERT Inverts the picture horizontally and vertically.
BLANK	Selects the blank color of signal. See page 10 "BLANK ON button. When start up screen is displayed, screen will blank out 5 minutes later.
REVEAL	Selects the speed or revelation. See page 10 "BLANK ON button.
MESSAGE	Turn off the on-screen message. (VOLUME, Input selection display)

OPT.

The menu OPT. allows you to control communication function etc.

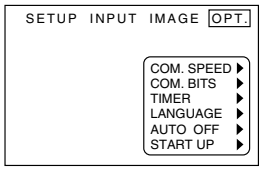

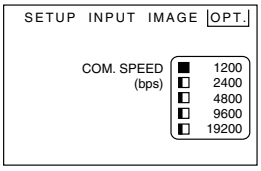

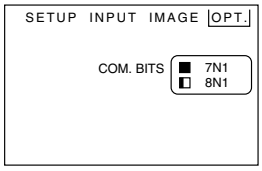

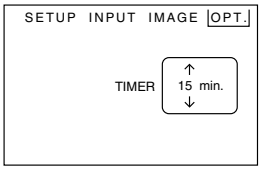

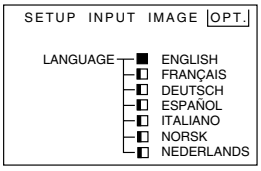

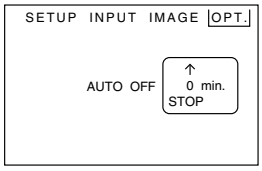

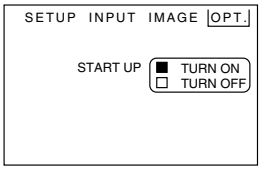

Adjustment Item	Details of adjustment
COM. SPEED (COMMUNICATION SPEED)	Selects the data speed of transmission. (five kinds)
COM. BITS (COMMUNICATION BITS)	Selects the data format or transmission 7N1...7 data bits, No parity, 1 stop bit. 8N1...8 data bits, No parity, 1 stop bit.
TIMER	Sets the minutes of timer. (0~99)
LANGUAGE	Selects the language on-screen menu. (English, Français, Deutsch, Español, Italiano, Norsk, Nederlands)
AUTO OFF	Sets time (minutes) from the start of displaying start up screen (No input is detected or sync is out of range) to turning the power OFF. "0" is stop and another "1~99"
START UP	Sets/releases start up screen displayed when power is turned on, or when no input is detected or sync is out of range.

ENGLISH

Connection to the video signal terminals

1. Input signal

S-VIDEO signal		Luminance signal 1.0Vp-p, 75Ω termination Chrominance signal 0.286Vp-p (burst signal), 75Ω termination
VIDEO signal		1.0Vp-p, 75Ω termination
AUDIO signal	Input	200mVrms, 20kΩ below (MAX 3.0Vp-p)
	Output	0~200mVrms, 1kΩ

2. Signal input terminal

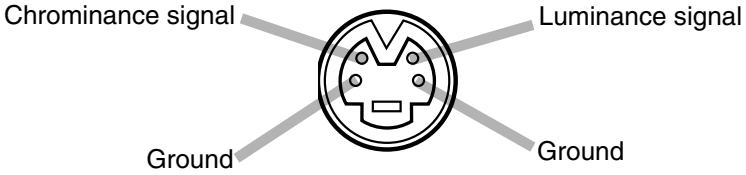

S VIDEO input (Mini DIN4 pin)

> **Caution** Video input signal terminals have priority in the following order.
> ①S-VIDEO input terminal ②RCA jack input terminal
> Even when the video signal is displayed, only an audio signal is output to RGB audio output terminals.

Connection to the RGB signal terminal

1. Input / output signal

Video signal		Analog 0.7Vp-p 75Ω termination (Positive polarity)
Horizontal sync signal		TTL level (Positive/negative polarity)
Vertical sync signal		TTL level (Positive/negative polarity)
Composite sync signal		TTL level
Audio signal	Input	200mVrms, 20kΩ below (MAX 3.0Vp-p)
	Output	0~200mVrms, 1kΩ

2. Signal input / output terminal

1	Video signal (Red)	9	N.C
2	Video signal (Green)	10	Ground
3	Video signal (Blue)	11	N.C
4	N.C	12	DDC (Display Data channel) RGB1 only
5	N.C	13	Horizontal/Composite sync signal
6	Ground (for R)	14	Vertical sync signal
7	Ground (for G)	15	DDC (Display Data channel) RGB1 only
8	Ground (for B)		

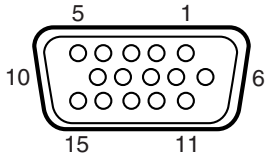

D-sub 15pin shrink terminal (Female)

> **Caution** Do not use RGB cable other than that specified.
> Some RGB cable may not operate DDC (Display Data Channel) because there are not connect from pin NO. ⑮ to pin NO. ⑫ .

Connection to the RGB signal terminal(continued)

3. Example of computer signal

Resolution H X V	fH (kHz)	fV (Hz)	Standard Type	Note 1	Note 2	Note 3	Display Dots
640 X 400	24.8	56.4		NEC PC9800		Expanded	1024 X 640
640 X 350	37.9	85.1	VESA	VGA-1		Expanded	1008 X 560
640 X 400	37.9	85.1	VESA	VGA-2		Expanded	1008 X 640
720 X 400	37.9	85.0	VESA	TEXT		Expanded	1008 X 640
640 X 480	31.5	59.9	VESA	VGA-3		Expanded	1024 X 768
640 X 480	35.0	66.7		Mac13" mode	SW 1 ON SW 2 ON	Expanded	1024 X 768
640 X 480	37.9	72.8	VESA	VGA-3(72Hz)		Expanded	1024 X 768
640 X 480	37.5	75.0	VESA	VGA-3(75Hz)		Expanded	1024 X 768
640 X 480	43.3	85.0	VESA	VGA-3(85Hz)		Expanded	1024 X 768
800 X 600	35.2	56.3	VESA	SVGA (56Hz)		Expanded	1000 X 750
800 X 600	37.9	60.3	VESA	SVGA (60Hz)		Expanded	1000 X 750
800 X 600	48.1	72.2	VESA	SVGA (72Hz)		Expanded	1000 X 750
800 X 600	46.9	75.0	VESA	SVGA (75Hz)		Expanded	1000 X 750
800 X 600	53.7	85.1	VESA	SVGA (85Hz)		Expanded	1000 X 750
832 X 624	49.7	74.5		Mac16" mode	SW 2 ON SW 4 ON	Expanded	1024 X 768
1024 X 768	48.4	60.0	VESA	XGA (60Hz)			1024 X 768
1024 X 768	56.5	70.1	VESA	XGA (70Hz)			1024 X 768
1024 X 768	60.0	75.0	VESA	XGA (75Hz)			1024 X 768
1152 X 768	67.5	75.0	VESA	SXGA (75Hz)		Compressed	1008 X 756
1280 X 960	60.0	60.0	VESA	SXGA (60Hz)		Compressed	1024 X 768
1280 X 1024	64.0	60.0	VESA	SXGA (60Hz)		Compressed	960 X 768
1280 X 1024	80.0	75.0	VESA	SXGA (75Hz)		Compressed	960 X 768

Note 1: Signal mode

Note 2: MAC adapter is necessary to the resolution mode.
Projector is compatible with 13 inch mode and 16 inch mode.
MAC13"mode=switch 1 and switch 2 are ON.
MAC16"mode=switch 2 and switch 4 are ON.

Note 3:Display mode

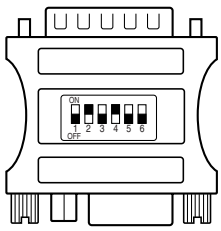

(Example 16inch mode)

Caution
- Some input source may not be displayed properly because they are not compatible with the projector.
- Some input source may not be displayed in full size as shown "Display Dots".

ENGLISH

Connection to the RGB signal terminal(continued)

4. Initial set signals

The following signals are initially set. The settings may be different depending on the computer type. In this case, adjust the settings referring to pages 16, 17.

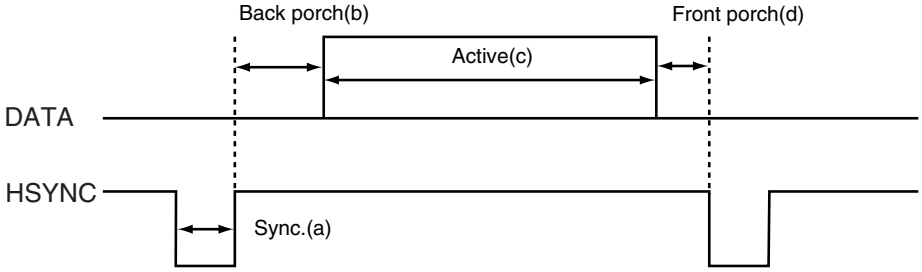

Computer/signal	Horizontal Timing (μs)			
	a	b	c	d
VGA-1 (85Hz)	2.0	3.0	20.3	1.0
VGA-2 (85Hz)	2.0	3.0	20.3	1.0
PC-9800	3.0	3.8	30.4	3.0
TEXT	2.0	3.0	20.3	1.0
VGA-3	3.8	1.9	25.4	0.6
Mac 13" mode	2.1	3.2	21.2	2.1
VGA-3 (72Hz)	1.3	3.8	20.3	1.0
VGA-3 (75Hz)	2.0	3.8	20.3	0.5
VGA-3 (85Hz)	1.6	2.2	17.8	1.6
SVGA (56Hz)	2.0	3.6	22.2	0.7
SVGA (60Hz)	3.2	2.2	20.0	1.0

Computer/signal	Horizontal Timing (μs)			
	a	b	c	d
SVGA (72Hz)	2.4	1.3	16.0	1.1
SVGA (75Hz)	1.6	3.2	16.2	0.3
SVGA (85Hz)	1.1	2.7	14.2	0.6
Mac 16" mode	1.1	3.9	14.5	0.6
XGA (60Hz)	2.1	2.5	15.8	0.4
XGA (70Hz)	1.8	1.9	13.7	0.3
XGA (75Hz)	1.2	2.2	13.0	0.2
SXGA (1152 X 864, 75Hz)	1.2	2.4	10.7	0.6
SXGA (1280 X 960, 60Hz)	1.0	2.9	11.9	0.9
SXGA (1280 X 1024, 60Hz)	1.0	2.9	11.9	0.9
SXGA (1280 X 1024, 75Hz)	1.1	1.8	9.5	0.1

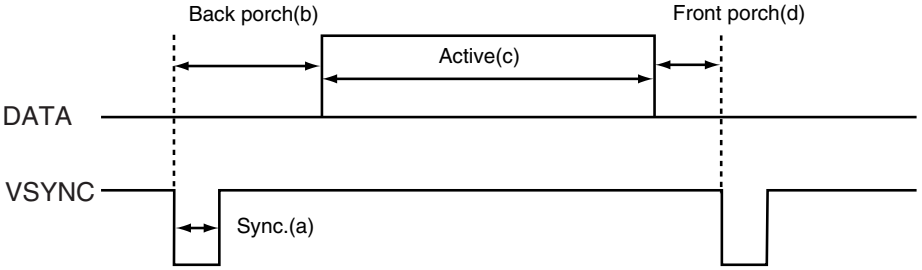

Computer/signal	Vertical Timing (lines)			
	a	b	c	d
VGA-1 (85Hz)	3	60	350	32
VGA-2 (85Hz)	3	41	400	1
PC-9800	8	25	400	7
TEXT	3	42	480	1
VGA-3	2	33	480	10
Mac 13" mode	3	39	480	3
VGA-3 (72Hz)	3	28	480	9
VGA-3 (75Hz)	3	16	480	1
VGA-3 (85Hz)	3	25	480	1
SVGA (56Hz)	2	22	600	1
SVGA (60Hz)	4	23	600	1

Computer/signal	Vertical Timing (lines)			
	a	b	c	d
SVGA (72Hz)	6	23	600	37
SVGA (75Hz)	3	21	600	1
SVGA (85Hz)	3	27	600	1
Mac 16" mode	3	39	624	1
XGA (60Hz)	6	29	768	3
XGA (70Hz)	6	29	768	3
XGA (75Hz)	3	28	768	1
SXGA (1152 X 864, 75Hz)	3	32	864	1
SXGA (1280 X 960, 60Hz)	3	36	960	1
SXGA (1280 X 1024, 60Hz)	3	38	1024	1
SXGA (1280 X 1024, 75Hz)	3	38	1024	1

Connection to the control signal terminal

1. Control signal terminal

Pin No.	RS-232C	Mouse		
		PS/2	ADB	Serial
1				
2		CLK		
3		DATA	DATA	
4				
5				
6	SELO	SELO		SELO
7	RTS	RTS	RTS	RTS
8				
9		+5V	+5V	
10	GND	GND	GND	GND
11				
12				
13	RDP			
14	TDP			TD
15				

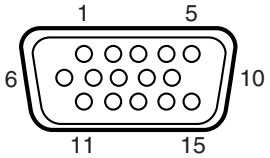

D-sub 15pin shrink terminal (Male)

Caution
Turn off the power of both the projector and computer before connecting.
Connect the computer to the control terminal of the projector using an appropriate cable.
Refer to the instruction manual of each device before connecting.

2. Mouse emulation

(1) Connect the projector and the mouse terminal of computer using an appropriate cable, while the projector and the computer are turn off.
(2) Turn the main power switch of the projector on and press the STANDBY/ON button. The indicator will light. (The ON indicator will light up green.).
(3) Press the INPUT of the projector or RGB button of the remote control transmitter and select the input connection.
(4) Turn on the computer.
(5) Start mouse emulation mode.
If can not start mouse emulation, reset the computer. (With soft reset or reset switch)
(6) See on the page 9 about to operate the remote control transmitter.
Caution : Mouse cannot be operated while start up screen or menu screen is being displayed.

Caution
- In some note computers which have internal pointing device, mouse emulation don't work without setting the internal pointing device disabled. In this case, set the internal pointing device disabled in BIOS setting. After setting in BIOS, operate (1) ~ (5) Please check its hardware manuals to disable internal pointing device in BIOS setting.
- In some computers, mouse emulation don't work without the utility program. In this case, see and check the operating manuals of the computer.

ENGLISH

Connection to the control signal terminal (continued)

PS/2 mouse

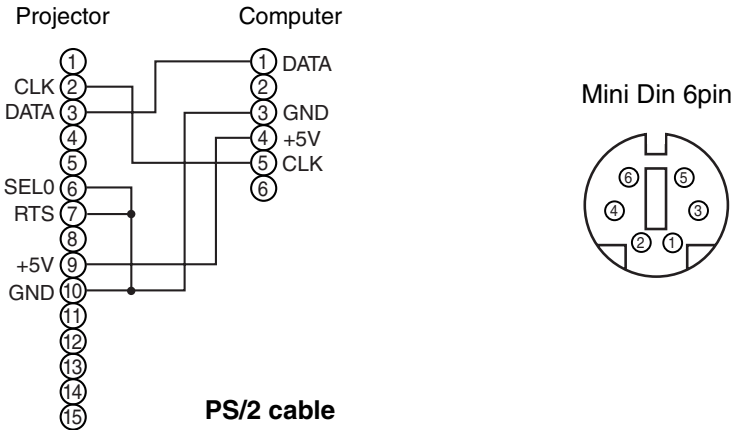

ADB (Mac) mouse

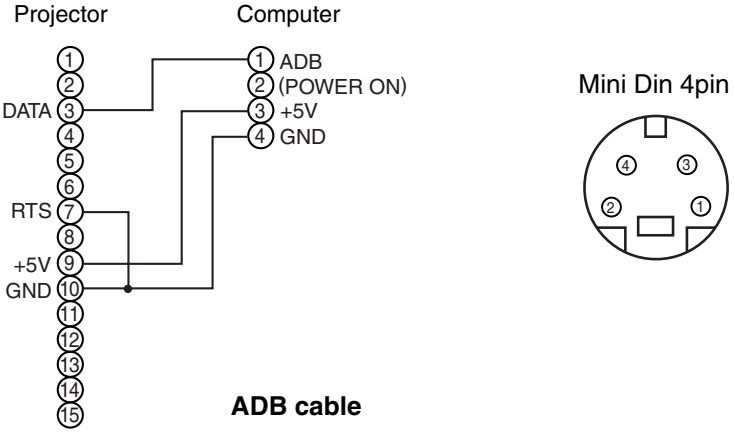

Serial mouse

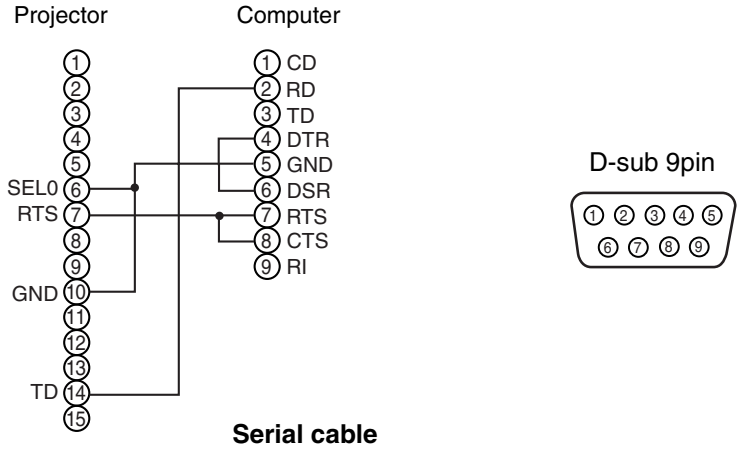

Caution	Communication via RS-232C cannot be operated with Serial mouse cable. Purchase RS-232C cable. Type name : Cable serial interface Parts No. : ZU 0243 70 0010

Connection to the control signal terminal (continued)

3. Communication

(1) Connect the projector and computer using RS 232C cable.

(2) Turn off the computer and after computer is setting up, turn on the projector.

(3) Select the data speed (COM.SPEED) and the data format (COM.BITS) of the projector. (See page 19)

(4) Start communication.

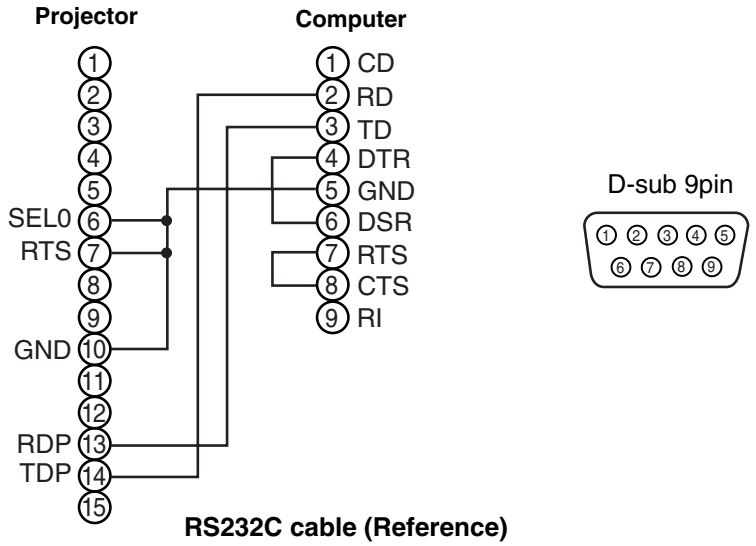

RS232C cable (Reference)

4. Control command table

Control command table

Item	Projector→Computer			Computer→Projector						
	Reply code			Ask code		Set code			Default code	
	1st	2nd	data	1st	2nd	1st	2nd	data	1st	2nd
MOUSE	11h	05h	+1	20h	05h	31h	05h	+1	40h	05h
COMMUNICATE	11h	06h	+1	20h	06h	31h	06h	+1	40h	06h
POWER	11h	11h	+1	20h	11h	31h	11h	+1	———	
MIRROR	11h	14h	+1	20h	14h	31h	14h	+1	40h	14h
INPUT	11h	21h	+1	20h	21h	31h	21h	+1	40h	21h
(VIDEO) SYSTEM	12h	22h	+2	20h	22h	32h	22h	+2	40h	22h
VOLUME	11h	23h	+1	20h	23h	31h	23h	+1	40h	23h
MUTE	11h	24h	+1	20h	24h	31h	24h	+1	40h	24h
BRIGHT	13h	31h	+3	20h	31h	33h	31h	+3	40h	31h
CONTRAST	13h	32h	+3	20h	32h	33h	32h	+3	40h	32h
COLOR	13h	33h	+3	20h	33h	33h	33h	+3	40h	33h
TINT	13h	34h	+3	20h	34h	33h	34h	+3	40h	34h
SHARPNESS	13h	35h	+3	20h	35h	33h	35h	+3	40h	35h
H. PHASE	13h	37h	+3	20h	37h	33h	37h	+3	40h	37h
H. POSIT	14h	38h	+4	20h	38h	34h	38h	+4	40h	38h
H. SIZE	14h	36h	+4	20h	36h	34h	36h	+4	40h	36h
V. POSIT	14h	3Ah	+4	20h	3Ah	34h	3Ah	+4	40h	3Ah
COLOR BALANCE	13h	3Bh	+3	20h	3Bh	33h	3Bh	+3	40h	3Bh
AUTO ADJUSTMENT	11h	3Ch	+1	20h	3Ch	31h	3Ch	+1	40h	3Ch
BLANK	11h	41h	+1	20h	41h	31h	41h	+1	40h	41h
REVEAL	11h	42h	+1	20h	42h	31h	42h	+1	———	
MAGNIFY	11h	15h	+1	20h	15h	———			40h	15h
	16h	15h	+6	———		36h	15h	+6	———	
FREEZE	11h	16h	+1	20h	16h	31h	16h	+1	40h	16h

ENGLISH

Connection to the control signal terminal (continued)

Control data table

Item	Data code
MOUSE	00h=stop mouse emulation. 01~7Fh=start mouse emulation
COMMUNICATE	0Xh=8N1, 1Xh=7N1 X0h=1200bps, X1h=2400bps, X2h=4800bps, X3h=9600bps, X4h=19200bps
POWER	3Eh=Power off (Standby mode), 3Fh=Power on
MIRROR	00h=Normal, 01h=H:Invert, 02h=V:Invert, 03h=H&V:Invert
INPUT	11h=VIDEO, 21h=RGB1, 22h=RGB2
VIDEO SYSTEM	00h 00h=Auto, 00h 01h=NTSC, 00h 04h=NTSC4.43 00h 02h=PAL, 00h 03h=SECAM, 00h 05h=M-PAL, 00h 06h=N-PAL
VOLUME	00h (min) ~ 24h (max)
MUTE	00h=Mute off, 01h=Mute on
BRIGHT	00h 00h 00h (dark) ~ 00h 00h 24h (brite)
CONTRAST	00h 00h 00h (lower) ~ 00h 00h 24h (higher)
COLOR	00h 00h 00h (less) ~ 00h 00h 24h (more)
TINT	00h 00h 00h (red) ~ 00h 00h 24h (green)
SHARPNESS	00h 00h 00h (soft) ~ 00h 00h 24h (sharp)
H. PHASE	00h 00h 00h ~ 00h 00h 1Fh
H. POSIT	00h 00h 4Fh 00h (left) ~ 00h 00h 17h 05h (right)
H. SIZE	00h 00h 06h 06h (narrow) ~ 00h 00h 04h 0Ch (wide)
V. POSIT	00h 00h 03h 00h (down) ~ 00h 00h 00h 06h (up)
COLOR BALANCE	00h 00h 00h (for Red) ~ 00h 00h 24h (for Blue)
AUTO ADJUST	00h (start) , 07h (stop)
BLANK	0Xh=Blank off, 1Xh=Blank on bit0 0=Blue off, 1=Blue on, bit1 0=Green off, 1=Green on bit2 0=Red off, 1=Red on, bit3 0=Not change, 1=change
REVEAL	X1h=Reveal down, X4h=Reveal right, X=0 (slow) ~ 7 (fast)
MAGNIFY	(1) Circuit codes when ask code and default set code are issued (Number of data byte=1) 00h=normal display, 01h=magnified display (2) When magnification is set by setting codes (Number of data bytes=6) 1st, 2nd data bytes: magnification starting positions in horizontal direction (left end) 00h 00h (left) ~ 3Ch 05h (right) 3rd, 4th data bytes: magnification starting positions in vertical direction (top) 00h 00h (top) ~ 0Dh 04h (bottom) 5th, 6th data bytes: Horizontally magnified dot number data 64h 00h (large) ~ 20h 06h (small)
FREEZE	00h=normal display, 01h=still picture display

Caution If computer sends the undefined command code or data code, Projector can not guarantee operation.

Command is consisted of 2 command bytes and following data bytes.
1-st byte indicates the kinds of commands and the length of command.

'0xH' : Error-reply	Projector sends to computer.
'1xH' : Command reply	Projector sends to computer.
'2xH' : Ask command	Computer sends to Projector.
'3xH' : Set command	Computer sends to Projector.
'4xH' : Default set command	Computer sends to Projector
'5xH' - 'FxH' : Reserved	

'x' indicates the length of data bytes.
2-nd byte indicates the command code 'yy' as command table.
Data table shows the data byte.

Connection to the control signal terminal (continued)

The procedure of getting the Projector status

(1)Computer sends the command '20H'+'yyH' to Projector.
(2)Projector reply the command '1xH'+'yyH'+data bytes.

The procedure of setting the Projector status

(1)Computer sends the command '3xH'+'yyH'+data bytes.
(2)Projector changes it's status.
(3)Projector reply the command '1xH'+'yyH'+data bytes which indicate status.

Caution
- (3) data bytes is not always same as (1) data bytes. If projector cannot realize the status of (1) data bytes, projector set the proper status and reply this new setting data bytes or projector reply the error reply '0xH'+'yyH'+data bytes same as (1).
- When only power control (POWER COMMAND) is performed, it takes about 2~140 seconds between sending set code and receiving answering code.

The procedure of default setting the Projector status

(1)Computer sends the command '40H'+'yyH'
(2)Projector changes it's status to default setting.
(3)Projector reply the command '1xH'+'yyH'+data bytes which indicate default.

The example of command error

When projector cannot accept command from PC, error code '00H'+'yyH' is sent back.
(in a case when command code '2xH', '3xH' or '4xH'+'yyH'+data is sent from PC to projector)

The example of data error

When projector cannot accept command from PC, error code with data '00H'+'yyH'+data is sent back as it is. (in a case when command code '2xH', '3xH' or '4xH'+'yyH'+data is sent from PC to projector)
When data is longer than required data code length, projector ignores excess data code.
When data is shorter than required data code length, projector sends back error code shown above.

The example of framing error

Projector sends error code '70H'+'70H' up to 10 times at intervals of 1 second until any answer is received.

The interval of command bytes and data bytes

After command code '2xH', '3xH' or '4xH' is sent from PC, if command or data is not sent within 500ms, projector sends back error command '70H'+70H'. If no answer is sent within 1 second from that time, framing error is assumed.

Caution
- The interval of command bytes and data bytes must be over 1mS and under 500mS. If it is under 1mS, it may be treat as framing error.
- After projector has sent back answer code, when next command is to be sent from PC, allow for an interval of 40ms or more between answer code and other code.

Example of system setup

Connecting various equipment.

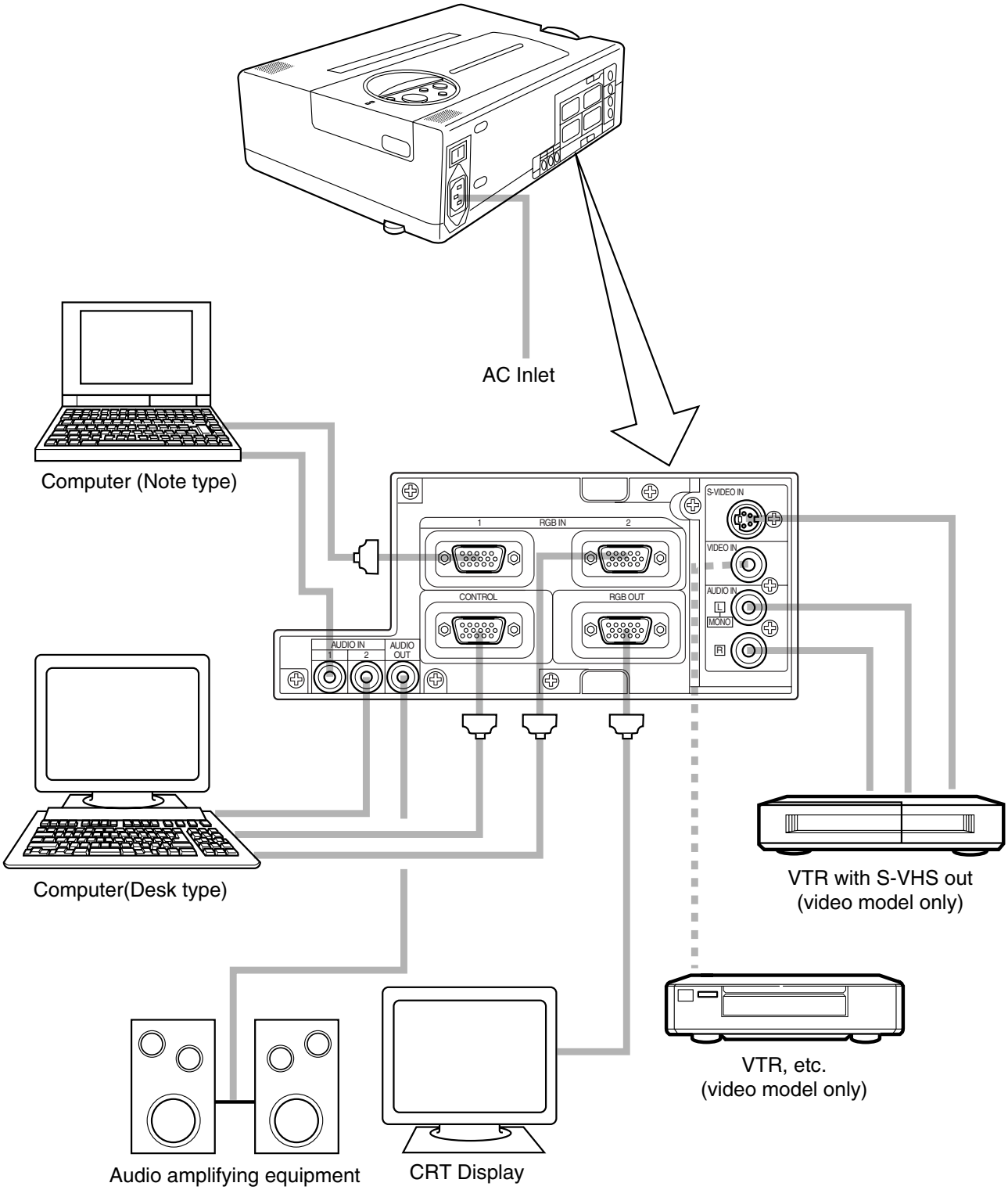

Cleaning the air filter

Clean the air filter about every 100 hours.

ENGLISH

1 Turn the main power switch off and disconnect the power plug from the power outlet.

2 Remove the front filter cover.

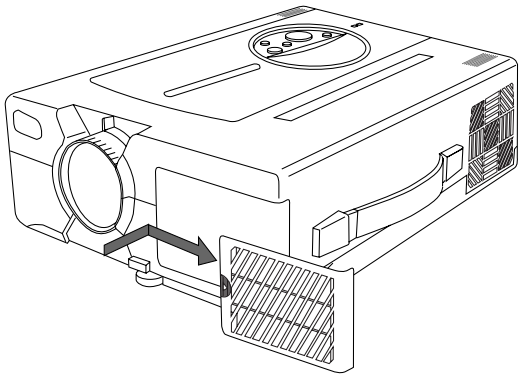

3 Clean the air filter using a vacuum cleaner.

- When air filter is very dirty, wash it using neutral detergent diluted with water, and dry well.

4 Attach the air filter on the cover.

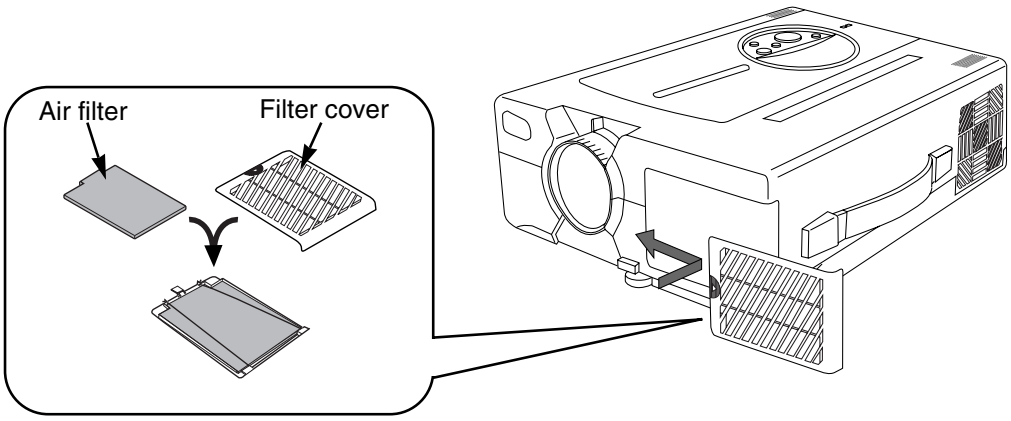

Caution

- If air filter is strutted with dust, etc., protection circuit will turn the power off.
- Do not use with removed air filter.

Lamp

Light source lamp has a service life.
The picture will become dark or color will be poor when the lamp is used for a long time.
If usage of lamp is continued in such cases, it could cause a malfunction. Replace lamp with new one.
As reference for replacement time, indicator will operate or message will be displayed when the power is turned on, as shown on page 31,32. In these cases the lamp should be replaced. Consult your dealer.

> **Caution** Also LAMP indicator will light when the lamp becomes too hot. Turn off the power and let the projector cool for 45 minutes. Turn on. If LAMP indicator still lights up red, contact your dealer.

1. How to replace lamp

(Option lamp : Lamp unit DT00205)

HIGH VOLTAGE
HIGH TEMPERATURE
HIGH PRESSURE

When replacing lamp, turn off and remove AC cord, wait 45 minutes to let lamp cool. High-pressure lamp when hot, may explode if improperly handled.

> **Caution**
> - For disposal of used lamp, treat according to the instruction of community authorities.
> - Since the lamp is made of glass, do not apply shock to it and do not scratch it.
> - Also, do not use old lamp. This could also cause explosion of the lamp.
> - If it is probable that the lamp has exploded (explosive sound is heard), disconnect the power plug from the power outlet and ask your dealer to replace lamp. The lamp is covered by front glass and air-tight structure, but, in rare cases, the reflector and the inside of the projector may be damaged by scattered broken pieces of glass, and broken pieces could cause injury when being handled.

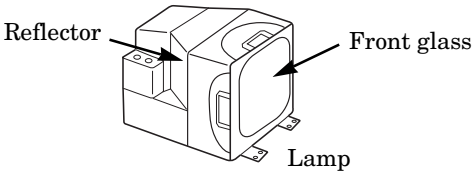

1 Turn the main power switch off and disconnect the power plug from the power outlet.

2 Remove the lamp cover.

- If lamp is hot at this time, this could cause burn. Wait for minimum 45 minutes until lamp is cooled down.
- Loosen a screw and remove the cover.

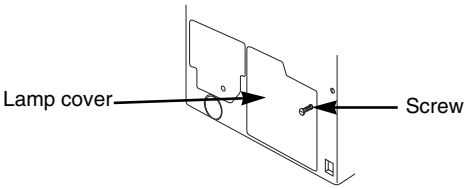

3 Loosen two screws and pull the handle to remove the lamp.

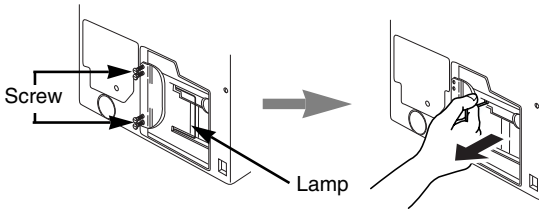

- If the screws are not loosened completely, your fingers may be damaged.
- Do not insert your hand into the box after the lamp is removed.
  (There are optical parts inside. If touched by hand, it may result in color unevenness, etc.)

4 Replace the lamp with new one and fix it using the same two screws.

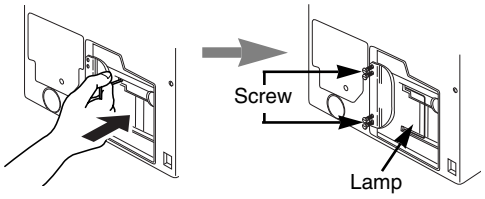

- Firmly tighten the lamp screws. Loose screws may cause bad connection of the connector which in turn may result in malfunctioning.

Lamp (continued)

5 Install the lamp cover and fix it using screws.

- To prevent burn, install the lamp cover and secure it using the screws.
- Do not turn on the power with lamp cover removed.

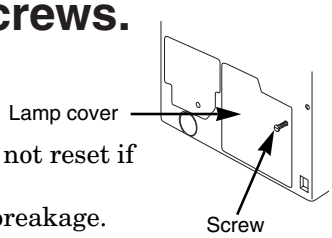

- Whenever the lamp is replaced, reset the total operation time of the lamp. Do not reset if the lamp has not been replaced.
- Do not perform resetting without changing the lamp, as this can cause lamp breakage.

2. Reset the lamp time

If you have replaced the lamp after the lamp replacement time had expired, perform the procedure explained below within 10 minutes after the power is turned on. The power will turn off automatically when the 10-minute period expires.

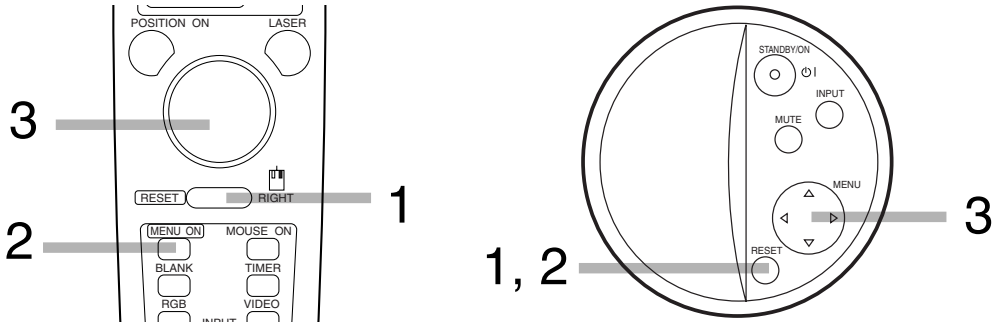

1) Press the RESET button on projector for 3 seconds or remote control TIMER button for 3 seconds and display the total lamp used time.
   - When accumulated operation time of the lamp reaches 1700 hours, the following display will appear at the bottom of the screen.

LAMP 1700 h

2) Press the RESET button on projector or remote control MENU ON button during displaying the lamp used time.

LAMP 1700 □ → 0 ■CANCEL

3) Select the "0" on the screen using the MENU (◀) button or DISK PAD.

Message table

On-screen display

The following messages are displayed on the screen.

MESSAGE	Action
CHANGE THE LAMP AFTER REPLACING LAMP, RESET THE LAMP TIMER.	The lamp has been in service for long. Replacement with a new lamp is recommended. The lamp will go off automatically when the lamp replacement time is exceeded. *1
CHANGE THE LAMP AFTER REPLACING LAMP, RESET THE LAMP TIMER. THE POWER WILL TURN OFF AFTER * Hr.	The total lamp service time will exceed the lamp replacement time in * hours. The lamp will go off automatically when the lamp replacement time is exceeded. Replace with a new lamp before that. *1 The asterisk (*) indicates the number of hours remaining before the lamp goes off automatically.
Blinking of CHANGE THE LAMP	The total lamp service time has exceeded the lamp replacement time. The lamp will go off automatically about 10 minutes after it starts blinking. Replace with a new lamp.*2
NO INPUT IS DETECTED	Signal is hot input. (See page 20, 21)
SYNC IS OUT OF RANGE	The horizontal frequency of the input signal exceeds the range of the projector, it cannot be displayed. (See page 21, 22)

*1 This message are not displayed after 3 minutes.
But this message are displayed when you turn on the power again.
*2 It is possible to again turn on the power, however the power will go off after about 10 minutes.

ENGLISH

Message table (continued)

Indicator display

The ON indicator, LAMP indicator and TEMP indicator will light or blink in the following cases.

ON indicator	LAMP indicator	TEMP indicator	Meaning	Remedy
Lights orange	Goes off	Goes off	Standby mode	————
Blinks green	Goes off	Goes off	During warming up	————
Lights green	Goes off	Goes off	During operation *1	————
Blinks orange	Goes off	Goes off	During cooling down	————
Lights red	Lights red	Goes off	Lamp cannot light *2	Cool projector by power off for 45 minutes. If the indicator is still it, lamp may be defective. Replace.
Lights red	Blinks red	Goes off	Lamp is not inserted or the lamp door open	Securely insert the lamp or close the lamp door.
Lights red	Goes off	Blinks red	Cooling fan accidented	Call a maintenance person.
Blinks red	Blinks red	Goes off	The total lamp service time has exceeded the lamp replacement time.	Call a maintenance person.

When the LAMP indicator lights, turn the power off. If the problem cannot be recovered, contact your dealer.

*1 When the suction fan is stopped and the inside becomes hot, the power is cut automatically for cooling. (The indicator light will go out.) In this case, turn off the power switch and allow the unit to cool down before turning the power switch on again. The lamp will light. If the lamp does not light because it is still automatically turned off, contact your dealer.

*2 If temperature inside the unit increases because of blocked vets, the lamp may go off for protection, and the LAMP indicator will turn red. Should this happen, turn off the main switch, wait until the set cools down (about 45 minutes), then again turn on the main switch.

When you think something wrong

Check the following again before asking for service. If the trouble cannot be recovered, consult your dealer.

Phenomena	Cause	Check point	Page
Power cannot be turned on.	•The Main power is not turned on. •The power cord is disconnected. •60 seconds have not elapsed since the power was turned off. •Inside the projector too hot.	•Turn the MAIN POWER switch on. •Insert the power cord into an AC socket. •When the power is turned off turn the power switch on after waiting at least 60 seconds. •Do not block the ventilation holes. •Clean the air filter. •Use the projector under 35°C temperature.	P.13 P.9 P.13 P.6 P.29
No picture and sound	•The setting of the input source is not correct. •Wiring to the projector is not correct.	•Set the correct input using the input select button of the projector or the remote control. •Connect the cable correctly.	P.8, 10, 13, 18 P.9, 28
Only picture is displayed with no sound	•Wiring to the projector is not correct. •The volume is set to minimum. •The unit enters the mute mode.	•Connect the cable correctly. •Press the VOL button or press the MENU button and adjust the volume. •Press the MUTE button.	P.9, 28 P.10, 17 P.8, 10
Only sound is heard without a picture	•Wiring the projector is not correct. •The brightness is set fully to the dark side. •Lens cap is attached.	•Connect the cable correctly. •Press the MENU button and select BRIGHT and press the ▶ button. •Remove the lens cap.	P.9, 28 P.17 P.13
Color is weak and tint is incorrect	The color and tint have been adjusted incorrectly.	Adjust the color and tint correctly.	P.17
Picture is dark	•The brightness and contrast has been adjusted incorrectly. •The lamp has not been adjusted.	•Adjust the brightness and contrast correctly. •Replace the lamp with a new one.	P.17 P.30
Picture is not clear	Focus or H.PHASE is not matched.	Adjust the focus or H.PHASE	P.13, 17
LAMP indicator lights red.	Trouble with the lamp.	Turn off the power and leave for 45 minutes ; then turn the power on again.	P.32
Remote control mouse cannot be operated.	•Cable was connected after the power was turned on. •RGB signal not selected.	•Be sure to perform procedure in the following order: (1)Connect cable. (2)Turn on projector. (3)Turn PC on. •Input RGB signal and select and display input source.	P.23

A bright dot may be seen in the picture. This is a phenomenon peculiar to the liquid crystal and is not a problem.

Specifications

• All specifications are subject to change without notice.

Product name		Liquid crystal projector		
Model name		CP-X940W/E		
Display system		3 sheets of liquid crystal panels, 3 primary color lights shutter system		
Liquid crystal panel	Panel size	2.3cm (0.9 inchs)		
	Drive system	TFT active matrix		
	Number of pixels	786,432 pixels (V768 X H1024)		
Lens		Zoom lens F=1.7 ~ 2.0 f=38 ~ 49		
Lamp		UHP lamp 150W		
Speaker		1W+1W (stereo)		
Power supply		AC100 ~ 120V, 2.9A/AC220 ~ 240V, 1.3A		
Power consumption		260W		
Usable temperature range		32 ~ 95°F	Storage Temperature range	-4 ~ 140°F
Dimensions (W X H X D)		9.8" X 3.9" (excluding foot adjuster) X 13.0" (excluding lens). 9.8" X 4.2" (including foot adjuster) X 13.2" (including lens).		
Weight		9.9 lbs.		
Input/Output terminal	Video signal input terminal	S VIDEO : Mini DIN4-pin terminal VIDEO : RCA Jack terminal AUDIO : RCA Jack terminal		
	RGB input/output signal terminal	RGB signal : D-sub 15pin shrink terminal (Female) AUDIO : Stereo mini jack		
	Control terminal	D-sub 15pin shrink terminal (Male)		
Accessories		Remote control ..... 1 POWER code ..... 3(CP-X940W) 2(CP-X940E) BATTERIES LR6 ..... 2 RGB cable 1	MAC adaptor ..... 1 Video/Audio cable ..... 1 Mouse cable ..... 3 Operating guide 1	

Dimension diagram

All dimensions shown in inches.

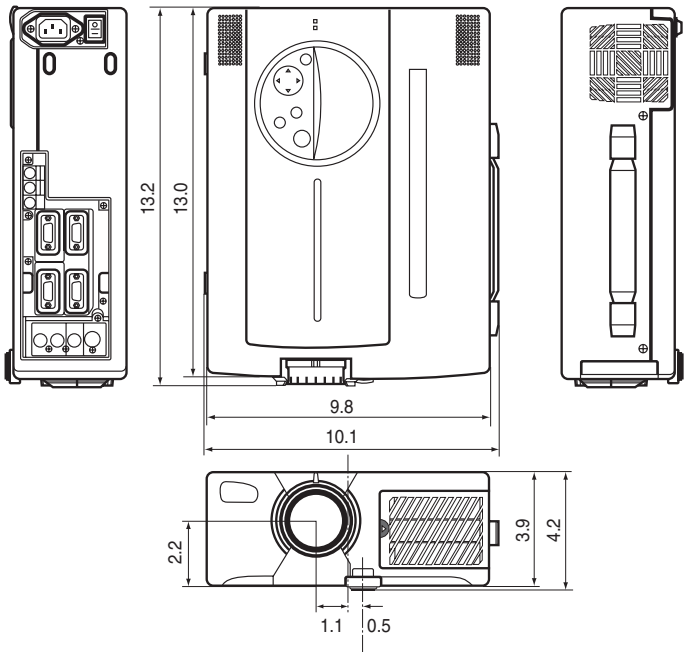

ENGLISH