USA's primary source for projector lamps
myprojectorlamps

PROJECTOR OWNER'S MANUAL

Hitachi

CP-310W

Need a replacement lamp for this projector?

www.myprojectorlamps.com

Original manufacturer manual, provided unmodified as a courtesy of MyProjectorLamps.com.
All trademarks belong to their respective owners.

Liquid Crystal Projector

USER'S MANUAL

ENGLISH

Thank you for purchasing this liquid crystal projector.

Please read the accompanying manual “SAFETY INSTRUCTIONS” and this “USER'S MANUAL” thoroughly to ensure correct usage through understanding. After reading, store this instruction manual in a safe place for future reference.

NOTE:

- The information in this manual is subject to change without notice.
- The manufacturer assumes no responsibility for any errors that may appear in this manual
- The reproduction, transmission or use of this document or contents is not permitted without express written authority.

TRADEMARK ACKNOWLEDGMENT:

- PS/2, VGA and XGA are registered trademarks of International Business Machines Corporation.
- Apple, Mac and ADB are registered trademarks of Apple Computer, Inc.
- VESA and SVGA are trademarks of the Video Electronics Standard Association.
- Windows is a registered trademark of Microsoft Corporation.
- Carefully observe the trademarks and registered trademarks of all companies, even when not mentioned.

CONTENTS

FEATURES.....P.2

BEFORE USE.....P.2
Contents of Package.....P.2
Part Names P.3
Loading the Battery.....P.5
Fixing the Handle P.5

INSTALLATION.....P.6
Installation of the projector and Screen.....P.6
Angle Adjustment.....P.6
Cabling.....P.7
Power Connection.....P.8
Example of System Setup.....P.8
Plug & Play.....P.8

OPERATIONS.....P.9
Switching the Power Supply ON/OFF....P.9
Basic Operation.....P.10
Setup Menu.....P.12
Input Menu P.13
Image Menu P.14
Options Menu.....P.15
No Signal Menu.....P.16

MAINTENANCE.....P.17
Lamp P.17
Air Filter Maintenance P.19
Other Maintenance.....P.19

TROUBLESHOOTING.....P.20
OSD Message.....P.20
Indicators Message.....P.21
Symptom P.22

SPECIFICATIONS P.23

WARRANTY AND AFTER-SERVICE...P.24

Tables:

Table 1. Installation Reference P.6
Table 2. Basic Operations.....P.10
Table 3. Setup Menu.....P.12
Table 4. Input Menu P.13
Table 5. Image Menu P.14
Table 6. Options Menu.....P.15
Table 7. No Signal Menu.....P.16
Table 8. OSD Message.....P.20
Table 9. Indicator Message.....P.21
Table 10. Symptom P.22
Table 11. Specifications.....P.23

For "TECHNICAL" and "REGULATORY NOTICE", see the end of this manual.

FEATURES

This liquid crystal projector is used to project various computer signals as well as NTSC / PAL / SECAM video signals onto a screen. Little space is required for installation and large images can easily be realized.

- **Outstanding brightness**
  The UHB lamp and high-efficiency optical system assure a high level of brightness.
- **Partial magnification function**
  Interesting parts of images can be magnified for closer viewing.
- **Distortion correction function**
  Distortion-free images are quickly available.

BEFORE USE

Contents of package

Make sure all of the following items are included in the package. If anything is missing, please contact your dealer.

NOTE: Keep the original packing material for future reshipment.

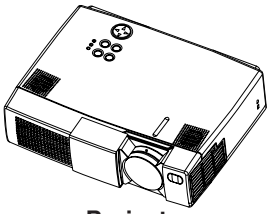

Projector

Power Cord US Type

Power Cord UK Type

Power Cord Europe Type

User's Manual (this manual)

RGB Cable

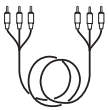

Video/Audio Cable

Mouse cable (PS/2)

Handle

Safety Instructions

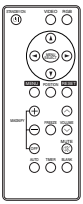

Remote Controller containing Battery

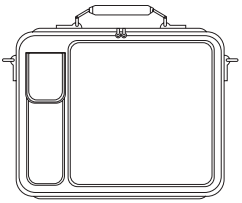

Carrying Bag

Part Names

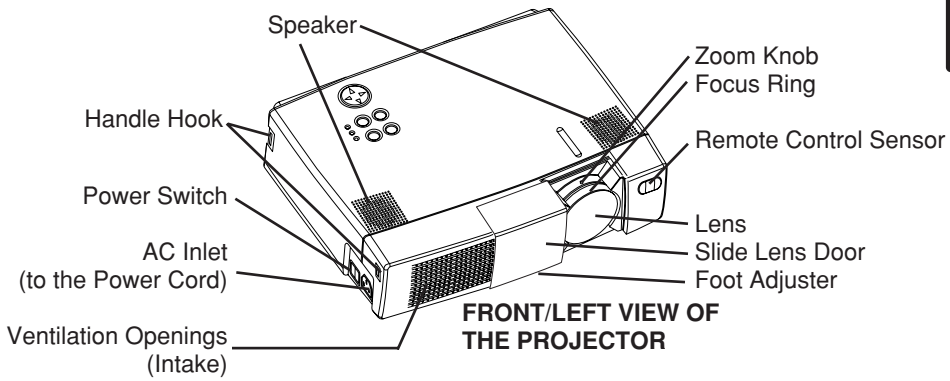

FRONT/LEFT VIEW OF THE PROJECTOR

Control Panel (Refer to P.9 "OPERATIONS")

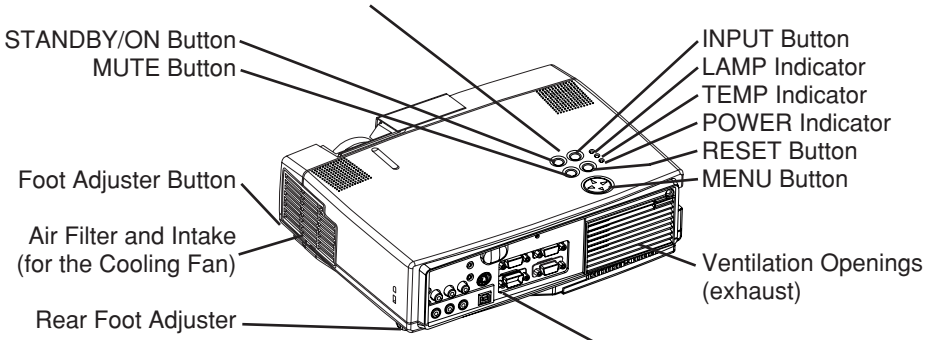

REAR/RIGHT VIEW OF THE PROJECTOR

Terminal Panel
(Refer below)

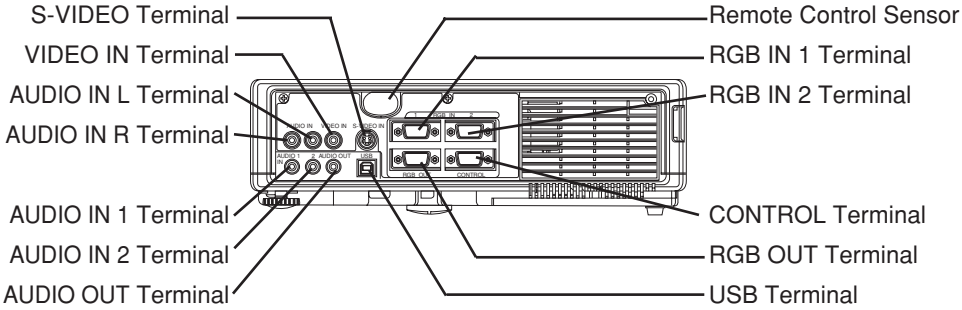

TERMINAL PANEL

Part Names (continued)

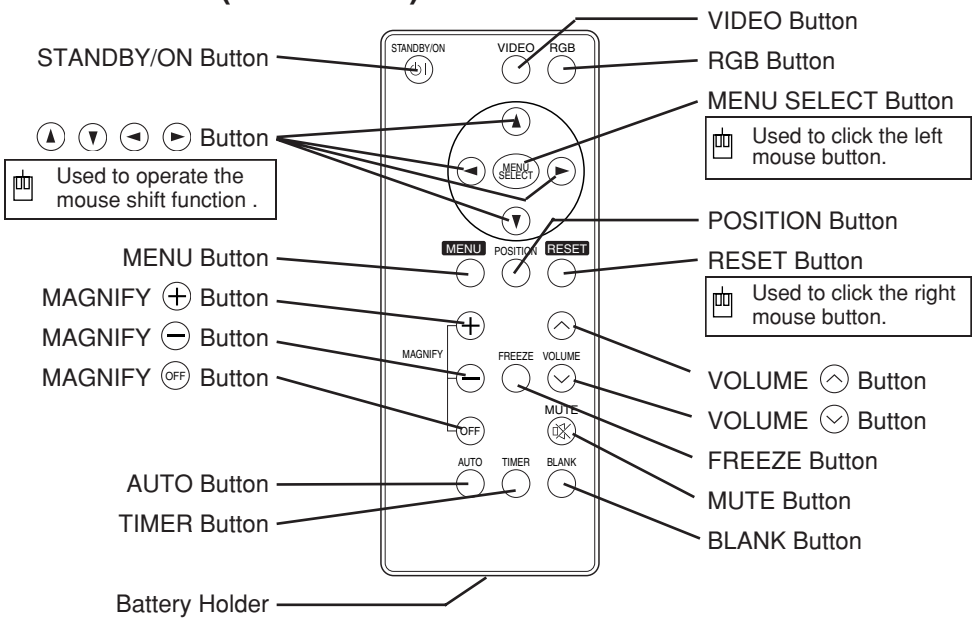

REMOTE CONTROL TRANSMITTER
(Refer to P.9 "OPERATIONS")

: These functions works when the mouse control function is activated. Remember, the POSITION, BLANK ON and MENU ON functions disable the mouse control function.

NOTE: To prevent any malfunction;
- Do not give the remote control transmitter any physical impact. Take care not to drop.
- Do not place the heavy objects on the remote control transmitter.
- Do not wet the remote control transmitter or place it on any wet object.
- Do not place the remote control transmitter close to the cooling fan of the projector.
- Do not disassemble the remote control transmitter in case of malfunction. Please bring it to the service station.

Loading the Battery

CAUTION

Danger of explosion if battery is incorrectly replaced.
Be careful in handling the battery according to instructions of the accompanying manual "SAFETY INSTRUCTIONS" and this manual.
Replace only with the same or equivalent type recommended by the manufacturer.
Use the 3V micro lithium battery type no. CR2025 only.
When you dispose the battery, you must obey the law in the relative area or country.
Keep the battery away from children and pets.

First Loading:

In original packing, the battery is installed in the battery holder of the remote controller with protection film(the transparent filmsome of which is inside the battery folder). Pull out the protection film to load the battery.

Replacing:

1. See the reverse side of the remote controller.
2. Pinch the groove and pull out battery holder as the drawing right.
3. Remove the worn battery.
4. Install the new battery with "+" side facing.
5. Push in and click the battery holder.

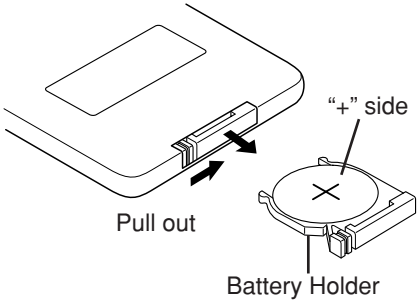

Fixing the Handle

Fix the enclosed handle if you need.

1. Raise up the handle hook, and pass one end of the handle through the hole of handle hook.
2. Buckle the end of the handle, as the right drawing.
3. Fix the other end of the handle to the other handle hook in the same way.

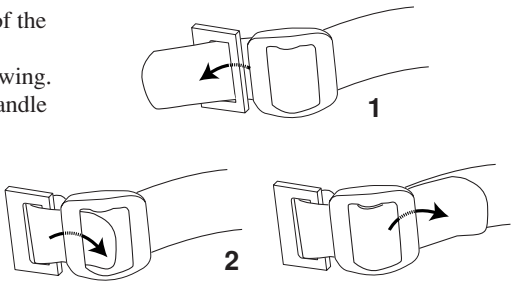

CAUTION

Make sure the handle is fixed before carrying the projector with the handle. If the projector should be dropped from the handle should be off, it could result in an injury, and continued use could result in fire or electrical shock. Do not flourish the projector with the handle.

INSTALLATION

Installation of the Projector and Screen

Refer to the drawing and table below for determining of the screen size and projection distance.

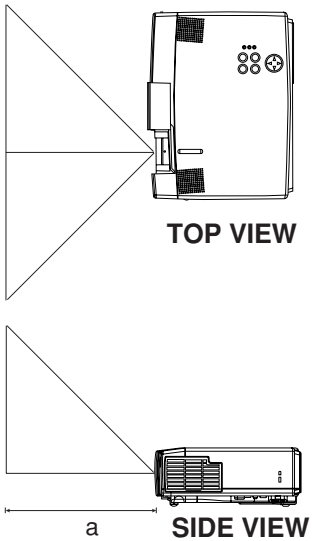

a: Distance from the LCD projector to the screen. The projection distances shown in the table below are for full size (800 x 600 dots).

Table 1. Installation Reference

Screen size (inches)	a (inches)	
	Min.	Max.
40	65	78
60	98	117
80	131	157
100	163	196
120	196	236
150	246	295
200	328	394

CAUTION

- Install the projector in a suitable environment according to instructions of the accompanying manual “SAFETY INSTRUCTIONS” and this manual.
- Please basically use liquid crystal projector at the horizontal position. If you use liquid crystal projector by the lens up position, the lens down position and the side up position, this may cause the heat inside to build up and become the cause of damage. Be especially careful not to install it with ventilation holes blocked.

Angle Adjustment

Use the foot adjuster on the bottom of the projector to adjust the projection angle. It is variable within 0˚ to 9˚ approximately.

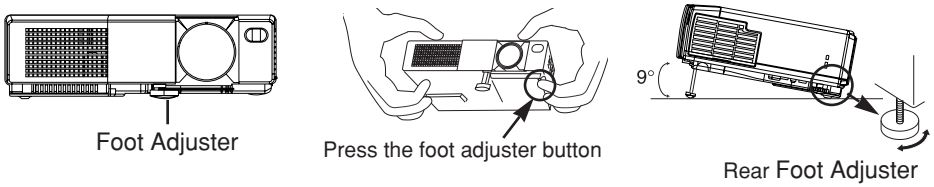

1. Lift up the front side of the projector, and pressing the foot adjuster button, adjust the projection angle.
2. Release the button to lock at the angle to be fixed.
3. Turn the rear foot adjuster to adjust the left-right slope.

CAUTION

Do not release the foot adjuster button unless the projector is being held; otherwise, the projector could overturn or the fingers could get caught and cause personal injury.

Cabling

RGB signal input:

Connect the RGB IN 1 or 2 terminal of the projector to the RGB signal output of the computer by the enclosed RGB cable.
For some modes, the optional Mac adapter is necessary. Consult your dealer to connect with the Apple computer.
Some computers may have multiple display screen modes. Use of some of these modes will not be possible with this projector.

Audio signal input (from computer) :

Connect the AUDIO IN 1 or 2 terminal of the projector to the audio signal output of the computer by the optional audio cable.

Video signal input:

Connect the VIDEO IN terminal of the projector to the video signal output of the video tape recorder by the enclosed video/audio cable except for S-Video signal.
For S-Video signal, use the S-VIDEO IN terminal of the projector and the optional S-Video cable with Mini DIN 4-pin jack.

Audio signal input (from video tape recorder) :

Connect the AUDIO IN R and L terminals of the projector to the audio output of the video tape recorder by the enclosed video/audio cable with RCA jack.

RGB signal output:

Connect the RGB OUT terminal of the projector to the RGB signal input terminal of the monitor by the optional RGB cable with D-sub 15-pin shrink jack and inch thread screws.

Audio signal output:

Connect the AUDIO OUT terminal of the projector to the audio signal input terminal of the speaker by the optional audio cable with stereo mini jack.

PS/2, ADB , Serial or RS-232C communication:

Connect the CONTROL terminal of the projector to the computer by an appropriate cable.
For PS/2 mouse control (for IBM and compatible) use the enclosed mouse cable. For others, consult your dealer.

USB communication (mouse control only):

Connect the USB jack (B type) of the projector to the USB jack (A type) of the computer by optional USB cable.

CAUTION

- Incorrect connecting could result in fire or electrical shock. Please read this manual and the separate “SAFETY INSTRUCTIONS”.
- Before connecting, turn off to all devices to be connected, except for the USB cable.
- The cables (Power cord, RGB cable and other cables) may have to be used with the core set to the projector side. Use the cables which are included with the projector or specified.

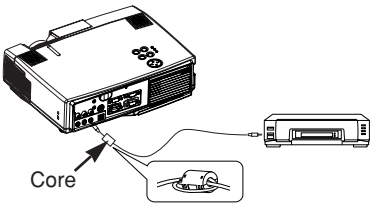

NOTE:

- Before connecting, read the instruction manuals of the devices to be connected, and make sure that the projector is compatible with the device.
- Secure the screws on the D-sub connectors and tighten.
- Refer to the TECHNICAL section for the pin assign of connectors and RS-232C communication data.

Power Connection

Use the correct one of the enclosed power cords depending on the power outlet to be used.
Connect the AC inlet of the projector to the power outlet firmly by the power cord.

WARNING

- Be carful in handling the power cord according to instructions of the accompanying manual "SAFETY INSTRUCTIONS" and this manual.
- Connect the power cord firmly. Avoid using a loose, unsound outlet or contact failure.

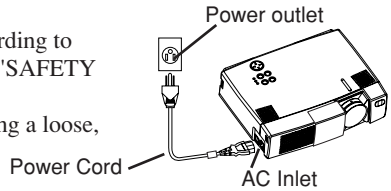

Example of system setup

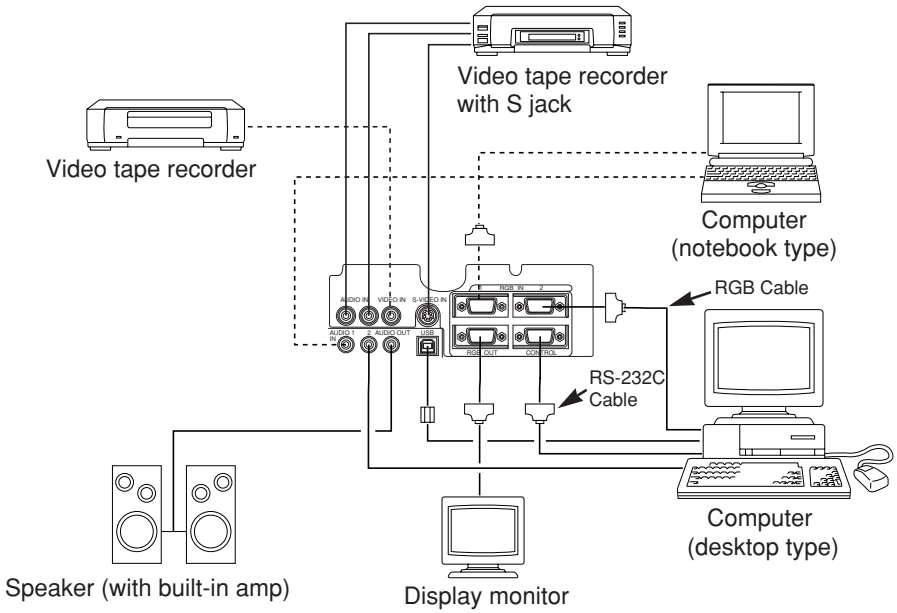

NOTE:
When connecting with notebook computer, set to valid the RGB external image output (setting CRT display or simultaneous display of LCD and CRT). Please read instruction manual of the notebook for more information.

Plug & Play

This projector is VESA DDC 1/2B compatible. Plug & play is possible by connecting to a computer that is VESA DDC (Display Data Channel) compatible.
(Plug & play is a system configured with peripheral equipment including a computer and display, and an operating system.

NOTE:

- Use the RGB cable included with this projector when using plug & play. With other cables, pins (12), (15) are sometimes not connected.
- Plug & play is available only when the RGB cable is connected to the RGB IN 1 terminal.

Switching the Power Supply ON/OFF

Switching Power ON

1. Check that the power cord is connected correctly.
2. Set the power switch to [|]. The standby mode is selected, and the Power indicator is turned to orange.
3. Press the STANDBY/ON button on the control panel or the remote control transmitter. Warm-up begins and the Power indicator blinks in green.
4. The Power indicator ceases blinking and turns to green when power is on. Open the slide lens door.
5. Adjust picture size using the projection lens Zoom Knob.
6. Adjust focus using the projection lens Focus Ring.

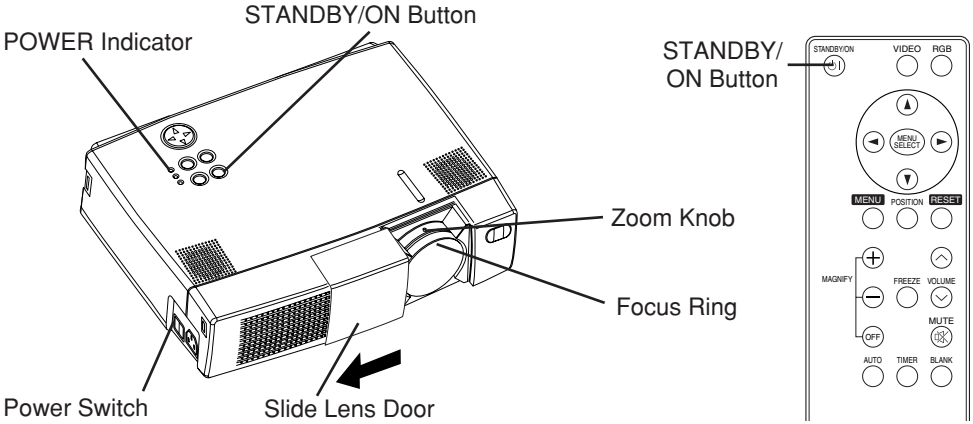

Switching Power OFF

1. Press the STANDBY/ON button on the control panel or the remote control transmitter for approximately two second. The projector lamp is extinguished and lamp cooling begins. The Power indicator blinks orange during lamp cooling. Pressing the STANDBY/ON button has no effect while the Power indicator is blinking.
2. The system assumes the Standby mode when cooling is complete, and the Power indicator ceases blinking and changes to orange. Check that the indicator is orange and set the Power switch to [O].
3. The Power indicator is extinguished when power is off. Do not forget to close the lens door.

WARNING

Please read this manual, and the separate “SAFETY INSTRUCTIONS” thoroughly before using the equipment. Always ensure that the equipment is used safely.

NOTE:

- Except in emergencies, do not turn off unless the Power indicator is orange as it will reduce the life of the projector lamp.
- To prevent any troble, turn on/off the projector when the computer or video tape recorder is OFF. Providing a RS-232C cable is connected, turn on the computer before the projector.

Basic Operation

The Basic operations shown in Table 2 is performed from the projector control panel or the supplied remote control transmitter. (items indicated by * may be used from the control panel)

NOTE: Use the remote control transmitter at a distance of approximately 3m from the sensor on the front of the projector, and within a range of 30° left-right. Strong light and obstacles will interfere with operation of the remote control transmitter.

Table 2 . Basic Operation

Item	Description
INPUT SELECT	**Changes in input signal in sequence:** Press INPUT button.* RGB1 → RGB2 → VIDEO → S-VIDEO (→ RGB1) **Select RGB input:** Press RGB button. VIDEO/S-VIDEO → RGB1/RGB2 RGB2 ↔ RGB1 **Select VIDEO/S-VIDEO input:** Press VIDEO button. RGB1/RGB2 → VIDEO/S-VIDEO S-VIDEO ↔ VIDEO • The selected signal name is displayed for approximately three seconds when the input signal is changed.
POSITION	**Set/Clear position adjustment mode:** Press POSITION button. The [ ] icon is displayed in the POSITION mode. **Image position adjustment:** Press the ◄, ►, ▲ and ▼ buttons in the position adjustment mode. • Valid only in the MAGNIFY mode with VIDEO/S-VIDEO input. • The [ ] icon is extinguished, and the position adjustment mode cleared automatically, after approximately ten seconds of inactivity. ◄, ►, ▲ and ▼ buttons may operate as the mouse control button. Refer to P.4.
RESET *	**Initialise menu items:** Select an item and press the RESET button. **Initialise position adjustment:** Press the RESET button and the POSITION mode.Valid only when RGB signal is input. • Valid except for VOLUME, LANGUAGE and H PHASE. • RESET button may operate as the mouse control button. Refer to P.4.
MAGNIFY	**Set MAGNIFY mode:** Press the MAGNIFY ⊕ button. **Move magnified area:** Run Position Adjustment in MAGNIFY mode. **Adjust magnification:** Press MAGNIFY ⊕ / ⊖ in MAGNIFY mode. **Clear MAGNIFY mode:** Press MAGNIFY OFF button. • MAGNIFY is cleared by running or setting AUTO, ASPECT, INPUT SELECT or VIDEO, or by changing the input signal.
FREEZE	**Set/Clear FREEZE mode:** Press FREEZE button. The [❚❚] icon is displayed, and the image frozen, in the FREEZE mode. • FREEZE is cleared by running or setting POSITION, VOLUME, MUTE, Auto Adjust, BLANK ON/OFF, or MENU ON/OFF, or by changing the input signal. • Do not forget to clear frozen static images.

Table 2. Basic Operation (continued)

Item	Description
VOLUME	**Volume adjustment :** Reduce VOLUME ⊗ ↔ Increase VOLUME ⊗
MUTE *	**Set/Clear Mute mode:** Press the MUTE button. No sound is heard in the MUTE mode.
AUTO	**Automatic adjustment at RGB input:** Press the AUTO button. Horizontal position(H.POSIT), vertical position (V.POSIT),clock phase (H.PHASE), and horizontal size(H.SIZE) are automatically adjusted. Use with the window at maximum size in the application display. **Automatic adjustment at VIDEO/S-VIDEO input:** Press the AUTO button. A signal type appropriate for the input signal is selected automatically. Valid only when AUTO is set for VIDEO on the menu. • This operation requires approximately ten seconds. It may not function correctly with some input signals.
TIMER ON/OFF	**Timer start/stop:** Press the TIMER button. Count-down and display by the minute from the initial value (1~99) set in TIMER on the Options menu to 0. • The timer is not displayed in the BLANK MODE or FREEZE MODE.
BLANK ON/OFF	**Set/Clear Blank mode:** Press the BLANK button. No image is displayed in the Blank mode. The screen color is as set in BLANK on the Image menu.
MENU ON/OFF *	**Menu display start/stop:** Press the MENU button. • The menu display is terminated automatically after approximately ten seconds of inactivity.
MENU SELECT	**Select menu type:** Press the MENU SELECT button. Allows the user to select the normal menu or the single menu. Only the selected item is displayed on the single menu, and other items are displayed with the ▲ and ▼ buttons as with the normal menu. • Valid only when the Setup menu is used. Push the MENU SELECT button after selecting items such as "BRIGHTNESS". • MENU SELECT button may operate as the mouse control button. Refer to P.4. **Normal menu** (MENU SELECT) **Single menu**

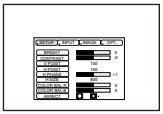

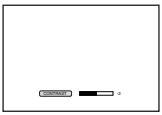

Setup Menu

The following adjustments and settings are possible when SETUP is selected at the top of the menu. Part of the Setup menu differs between RGB input and VIDEO/S-VIDEO input. Select an item with the ▲ and ▼ buttons, and start operation. Use the Single menu to reduce menu size (see Table 2, MENU SELECT).

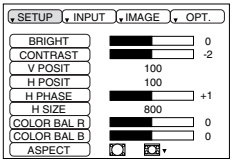

RGB

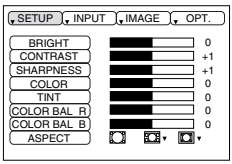

VIDEO/S-VIDEO

Table 3. Setup Menu

Item	Description	RGB	VIDEO S-VIDEO
BRIGHT	**Adjustment:** Dark ◄ ↔ Light ►	✔	✔
CONTRAST	**Adjustment:** Weak ◄ ↔ Strong ►	✔	✔
V POSIT	**Adjustment:** Down ◄ ↔ Up ►	✔	-
H POSIT	**Adjustment:** Left ◄ ↔ Right ►	✔	-
H PHASE	**Adjustment:** Left ◄ ↔ Right ► • Adjust to eliminate flicker.	✔	-
H SIZE	**Adjustment:** Small ◄ ↔ Large ► • The image may not be displayed correctly if the horizontal size is excessive. In such cases, press the RESET button, and initialize the horizontal size.	✔	-
SHARPNESS	**Adjustment:** Soft ◄ ↔ Clear ►	-	✔
COLOR	**Adjustment:** Light ◄ ↔ Dark ►	-	✔
TINT	**Adjustment:** Red ◄ ↔ Green ► • Valid only when NTSC or NTSC 4.43 signal is received.	-	✔
COLOR BAL R	**Adjustment:** Light ◄ ↔ Dark ►	✔	✔
COLOR BAL B	**Adjustment:** Light ◄ ↔ Dark ►	✔	✔
ASPECT	**Select image aspect ratio:** 4:3[ ] ◄ ↔ ► 16:9[ ] **Select position of image:** Press ▼ button while 16:9[ ] is selected. Center → ▼ Down → ▼ Up (→ Center ▼)	✔	-
	Select image aspect ratio: 4:3[ ] ◄ ↔ ► 16:9[ ] ◄ ↔ ► 4:3 small[ ] **Select position of image:** Press ▼ button while 16:9[ ]/4:3 small[ ] is selected. Center → ▼ Down → ▼ Up (→ Center ▼) • 4:3 small may not be displayed correctly with some input signals.	-	✔

Input Menu

The following functions are available when INPUT is selected on the menu. Select an item with the ▲ and ▼ buttons, and start or stop operation with the ► and ◄ buttons.

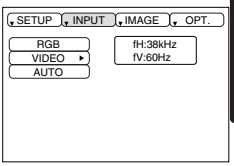

Table 4. Input Menu

Item	Description
RGB	**Displays RGB input frequency:** Displays the horizontal and vertical sync signal frequency for RGB input. • Valid only at RGB input.
VIDEO	**Select video signal type:** Select the signal type with the ▲ and ▼ buttons. Select NTSC, PAL, SECAM, NTSC4.43, M-PAL, or N-PAL as appropriate for the input signal. Auto Adjust is valid at VIDEO/S-VIDEO input when AUTO is selected, and is then used for automatic selection of the signal type. • Use this function when the image becomes unstable (eg. the image becomes irregular, or lacks color). • Auto Adjust requires approximately ten seconds. It may not function correctly with some input signals. Pressing the AUTO button in this case may correct this problem.
AUTO	**Automatic adjustment at RGB input:** Select EXECUTE with the ▲ button. Horizontal position, vertical position, clock phase, and horizontal size are automatically adjusted when EXECUTE is selected. Use with the window at maximum size in the application display. **Automatic adjustment at VIDEO/S-VIDEO input:** Select EXECUTE with the ▲ button. A signal type appropriate for the input signal is selected automatically when EXECUTE is selected. Valid only if AUTO is selected in VIDEO (see above). • This operation requires approximately ten seconds. It may not function correctly with some input signals. Pressing the AUTO button in this case may correct this problem. • This function is the same as for Auto Adjust in Basic operation.

Image Menu

The following adjustments and settings are available when IMAGE is selected on the menu. Select an item with the ▲ and ▼ buttons, and start operation.

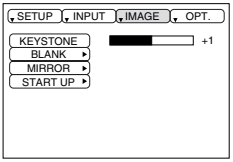

Table 5. Image Menu

Item	Description
KEYSTONE	**Adjustment:** Reduce size of bottom of image ◄ ↔ Reduce size of top of image ► • When this function is activated, the image may not be displayed correctly with some input signals.
BLANK	**Select blank screen color:** Select color with the ◄ and ► buttons. • The image is cleared when the BLANK mode is set with BLANK ON, or when there is no signal, and the entire screen is displayed in the selected color.
MIRROR	**Operation start/stop:** Press the ► or ◄ button. **Select Mirror status:** Select mirror status with ▲ and ▼ buttons.
START UP	**Operation start/stop:** Press the ► or ◄ button. **Setup initial screen display:** Select TURN ON with the ▲ button. **Clear initial screen display:** Select TURN OFF with the ▼ button. • Note that if TURN OFF is selected the blank screen is displayed in blue when there is no signal.

Options Menu

The following adjustments and settings are available when OPT. is selected on the menu. Select an item with the ▲ and ▼ buttons, and start operation.

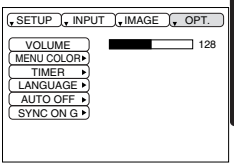

Table 6. Options Menu

Item	Description
VOLUME	**Volume adjustment:** Reduce VOLUME ◄ ↔ Increase VOLUME ►
MENU COLOR	**Select menu background color:** Select with the ► and ◄ buttons.
TIMER	**Operation start/stop:** Press the ► or ◄ button. **Setup initial timer value:** Set 1~99 minutes with the ▲ and ▼buttons.
LANGUAGE	**Operation start/stop:** Press the ► or ◄ button. **Select menu display language:** Select with the ▲ and ▼ buttons.
AUTO OFF	**Operation start/stop:** Press the ► or ◄ button. **Set AUTO OFF:** Set 1~99 minutes with the ▲ and ▼ buttons. The system automatically enters the standby mode when a signal is not received for the set time. **Clear AUTO OFF:** Select STOP (0 min.) with the ▼ button. When STOP is selected the system does not enter the standby mode even if no signal is received.
SYNC ON G	**Operation start/stop:** Press the ► or ◄ button. **SYNC ON G valid:** Select TURN ON with the ▲ button. **SYNC ON G invalid:** Select TURN OFF with the ▼ button. • May not be displayed correctly with some input signals when SYNC ON G is valid. In such cases, remove the signal connector so that no signal is received, set SYNC ON G to invalid, and reconnect the signal.

No Signal Menu

The same adjustments and settings are available as with the Image and Options menus when the MENU button is pressed during display of the "NO INPUT IS DETECTED ON ***" or "SYNC IS OUT OF RANGE ON ***" message while no signal is received.

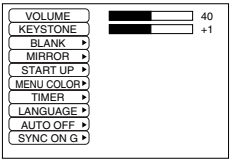

Table 7. No Signal Menu

Item	Description
VOLUME	**Volume adjustment:** Reduce VOLUME ◄ ↔ Increase VOLUME ►
KEYSTONE	**Adjustment:** Reduce size of bottom of image ◄ ↔ Reduce size of top of image ►
BLANK	**Select blank screen color:** Select color with the ◄ and ► buttons. • When the blank mode is set with BLANK ON, by absence of a signal, or by input of a non-standard signal, the image is cleared and the complete screen is displayed in the selected colour.
MIRROR	**Operation start/stop:** Press the ► or ◄ button. **Select Mirror status:** Select mirror status with ▲ and ▼ buttons.
START UP	**Operation start/stop:** Press the ► or ◄ button. **Setup initial screen display:** Select TURN ON with the ▲ button. **Clear initial screen display:** Select TURN OFF with the ▼ button. • Note that if TURN OFF is selected the blank screen is displayed in blue when there is no signal.
MENU COLOR	**Select menu background color:** Select with the ► and ◄ buttons.
TIMER	**Operation start/stop:** Press the ► or ◄ button. **Setup initial timer value:** Set 1~99 minutes with the ▲ and ▼ buttons.
LANGUAGE	**Operation start/stop:** Press the ► or ◄ button. **Select menu display language:** Select with the ▲ and ▼ buttons.
AUTO OFF	**Operation start/stop:** Press the ► or ◄ button. **Set AUTO OFF:** Set 1~99 minutes with the ▲ and ▼ buttons. The system automatically enters the standby mode when a signal is not received for the set time. **Clear AUTO OFF:** Select STOP (0 min.) with the ▼ button. When STOP is selected the system does not enter the standby mode even if no signal is received.
SYNC ON G	**Operation start/stop:** Press the ► or ◄ button. **SYNC ON G valid:** Select TURN ON with the ▲ button. **SYNC ON G invalid:** Select TURN OFF with the ▼ button. • May not be displayed correctly with some input signals when SYNC ON G is valid. In such cases, remove the signal connector so that no signal is received, set SYNC ON G to invalid, and reconnect the signal.

MAINTENANCE

Lamp

HIGH VOLTAGE
HIGH TEMPERATURE
HIGH PRESSURE

Contact your dealer before replacing the lamp.
(Option lamp: DT00331)
Before replacing the lamp, switch power OFF, remove the power cord from the power outlet, and wait approximately 45 minutes until the lamp has cooled. The lamp may explode if handled at high temperatures.

WARNING

- For disposal of used lamp, treat according to the instruction of community authorities.
- Since the lamp is made of glass, do not apply shock to it and do not scratch it.
- Also, do not use old lamp. This could also cause explosion of the lamp.
- If it is probable that the lamp has exploded (explosive sound is heard), disconnect the power plug from the power outlet and ask your dealer to replace lamp.
  The lamp is covered by front glass , but, in rare cases, the reflector and the inside of the projector may be damaged by scattered broken pieces of glass, and broken pieces could cause injury when being handled.
- Do not use the projector with the lamp cover removed.

Lamp

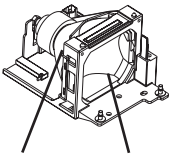

Lamp Life

Projector lamps have a finite life. The image will become darker, and hues will become weaker, after a lamp has been used for a long period of time.
Replace the lamp if the LAMP indicator is red, or the CHANGE THE LAMP message (see P.20 Table 8) appears when the projector is switched ON.

NOTE:
The LAMP indicator is also red when the lamp unit reaches high temperature. Before replacing the lamp, switch power OFF, wait approximately 20 minutes, and switch power ON again. If the LAMP indicator is still red, replace the lamp.

Replacing the Lamp

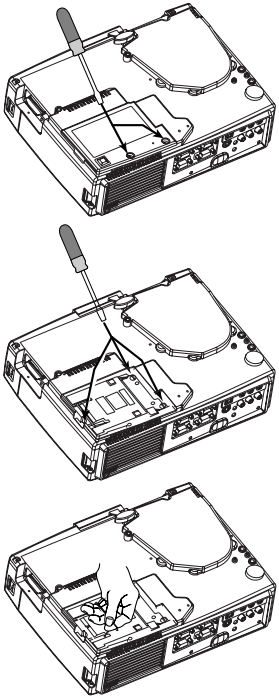

1. Switch the projector OFF, remove the power cord from the power outlet, and wait at least 45 minutes for the unit to cool.
2. Prepare a new lamp.
3. Check that the projector has cooled sufficiently, and gently turn it upside down.
4. Loosen the two screws as shown in the diagram, and remove the lamp cover.
5. Loosen the three screws, and gently remove the lamp while holding the grips. Touching the inside of the lamp case may result in uneven coloring.
6. Install the new lamp and tighten the three screws firmly. Also steadily push the opposite side of the screwed lamp into the unit.
7. Replace the lamp cover in position and tighten the two screws firmly.
8. Gently turn the projector right-side up.

CAUTION

- Ensure that screws are tightened properly. Screws not tightened fully may result in injury or accidents.
- Do not use the projector with the lamp cover removed.

Resetting the Lamp Timer

Reset the lamp timer after replacing the lamp. When the lamp has been replaced after the LAMP indicator is red, or the CHANGE THE LAMP message is displayed, complete the following operation within ten minutes of switching power ON. The power will be turned off automatically in over 10 minutes.

1. Switch power ON, and press the TIMER button on the remote control transmitter, or the RESET button on the control panel, for approximately three seconds. The ‘LAMP xxxx hr’ message will appear on the lamp timer on the bottom of the screen.
2. Press the MENU button on the remote control transmitter, or the RESET button on the control panel, while the lamp timer is displayed. The ‘LAMP xxxx □ → 0 ■ CANCEL’ message will then appear.
3. Press the ◄ and select 0, and wait until the timer display is cleared.

NOTE:

Do not reset the lamp timer without replacing the lamp. Reset the lamp timer always when replacing the lamp. The message functions will not operate properly if the lamp timer is not reset correctly.

Air Filter Maintenance

The air filter should be cleaned as described below at intervals of approximately 100 hours.

1. Switch the projector power supply OFF, and remove the power cord from the power outlet.
2. Clean the air filter with a vacuum cleaner.

CAUTION

- Switch power OFF and remove the power cord from the power outlet before beginning maintenance work. Please read the separate “SAFETY INSTRUCTIONS” thoroughly to ensure that maintenance is performed correctly.
- Replace the air filter if contamination cannot be removed, or if it is damaged. Contact your dealer in such case.(Option Air filter : MU01421)
- Do not use the equipment with the air filter removed.
- When the air filter is clogged with dust etc. the CHECK AIR FLOW message appears on the screen and the power supply is switched OFF automatically to prevent the temperature rising inside the projector.

Other Maintenance

Maintenance Inside the Equipment

For safety reasons, ensure that the equipment is cleaned and checked by the dealer once every two years. Maintaining the equipment by yourself is dangerous.

Cleaning the Lens

Gently wipe the lens with lens cleaning paper. Do not touch the lens with your hands.

Cleaning the Cabinet and Remote control transmitter

Gently wipe with a soft cloth. If dirt and stains etc. are not easily removed, use a soft cloth dampened with water, or water and a neutral detergent, and wipe dry with a soft, dry cloth.

CAUTION

- Switch power OFF and remove the power cord from the power outlet before beginning maintenance work. Please read the separate “SAFETY INSTRUCTIONS” thoroughly to ensure that maintenance is performed correctly.
- Do not use detergents or chemicals other than those noted above (e.g. benzene or thinners).
- Do not use cleaning sprays.
- Do not rub with hard materials, or tap the equipment.

OSD Message

The messages as described below may appear on the screen at power ON. Take the appropriate measures when such a message appears.

Table 8. OSD Messages

Message	Contents
CHANGE THE LAMP AFTER REPLACING LAMP, RESET THE LAMP TIME. *1)	The message shown at left appears after the lamp has been used for more than 1700 hours. The lamp is approaching the end of its life. Power is switched OFF automatically when the lamp reaches the end of its life. Prepare a new lamp for installation. Always reset the lamp timer after replacing the lamp.
CHANGE THE LAMP AFTER REPLACING LAMP, RESET THE LAMP TIME. THE POWER WILL TURN OFF AFTER ** hr. *1)	The lamp will reach the end of its life in ** hours. Power will be switched OFF automatically in ** hours. Replace the lamp as shown in P.17 “Lamp”. Always reset the lamp timer after replacing the lamp.
CHANGE THE LAMP AFTER REPLACING LAMP, RESET THE LAMP TIME. THE POWER WILL TURN OFF AFTER 0 hr.	The lamp has reached the end of its life. Power will be switched OFF in a few minutes. Switch power OFF immediately and replace the lamp as shown in P.17 “Lamp”. Always reset the lamp timer after replacing the lamp.
NO INPUT IS DETECTED ON ***	No input signal found. Check signal input connections and signal sources.
SYNC IS OUT OF RANGE ON ***	The horizontal or vertical frequency of the input signal is not within the specified range. Check the specifications of the equipment and the signal source.
CHECK THE AIR FLOW	The internal temperature has risen. Switch power OFF, and wait 20 minutes until the equipment cools. Check the following and Switch power ON again. • Are the ventilation openings blocked? • Is the air filter dirty? • Is the ambient temperature in excess of 35°C?

⚠ *1) This message is cleared automatically after approximately three minutes, and appears every time power is switched ON.

Indicators Message

The POWER indicator, LAMP indicator, and TEMP indicator are lit and blank as follows. Take the appropriate measures.

Table 9. Indicators Message

POWER indicator	LAMP indicator	TEMP indicator	Contents
Lights orange	Turns off	Turns off	The Standby mode has been set.
Blinks green	Turns off	Turns off	Warming up. Please wait.
Lights green	Turns off	Turns off	ON. Normal operation possible.
Blinks orange	Turns off	Turns off	Cooling. Please wait.
Lights red	Lights red	Turns off	Lamp is not lit. The interior of the equipment may be too hot. Switch power OFF, wait 20 minutes until the equipment cools, and Switch power ON again. Replace the lamp if the same problem occurs.
Lights red	Blinks red	Turns off	Lamp or lamp cover is not found, or hasn't been fitted in correctly. Switch power OFF, and wait for 45 minutes until the equipment cools. Check fitting of the lamp and lamp cover, and switch power ON again. Contact your dealer if the same problem occurs again.
Lights red	Turns off	Blinks red	The cooling fan is not operating. Switch power OFF, and wait for 20 minutes until the equipment cools. Check for foreign matters in the fan, and switch power ON again. Contact your dealer if the same problem occurs again.
Lights red	Turns off	Lights red	The interior of the equipment is too hot. *1) Switch power OFF, and wait for 20 minutes until the equipment cools. Check whether the ventilation openings are blocked, whether the air filter is dirty, or whether the ambient temperature exceeds 35 °C. Then switch power ON again. Contact your dealer if the same problem occurs again.

⚠ *1) When the internal temperature becomes excessive power is switched OFF automatically for safety reasons, and the indicator is extinguished. Set the power switch to [O] and wait for 20 minutes until the equipment has cooled sufficiently.

Symptom

Before requesting repair, check in accordance with the following chart. If the situation cannot be corrected, then contact your dealer.

Table 10. Symptom

Symptom	Possible cause	Remedy	Page
The power is not turned on.	The main power switch is not turned on.	Turn on the main power switch.	8,9
	The power cord is disconnected.	Plug the power cord into an AC power outlet.	
No video or audio.	The input is not correctly set.	Use the projector or remote control transmitter to set.	10
	No signal input.	Connect correctly.	7,8
Video is present but no audio.	The projector is not correctly connected.	Connect correctly.	7,8
	The volume is set to minimum.	Press VOLUME ⌃ on the remote control or display the menu screen and adjust the volume.	11,15
	Mute is turned on.	Press the MUTE button.	11
Audio is present but no video.	The projector is not correctly connected.	Connect correctly.	7,8
	The brightness adjustment knob is rotated fully clockwise.	Select BRIGHT with the MENU button and the press the ▶ button.	12
	The slide lens door is still closed.	Open the slide lens door.	9
Colors are pale and color matching is poor.	Color density and color matching are not correctly adjusted.	Adjust the video.	12
Images are dark.	Brightness and contrast are not correctly adjusted.	Adjust the video.	12
	The lamp is nearing the end of its service life.	Replace with a new lamp.	17
Video is blurred.	Focus or H PHASE is out of adjustment.	Adjust the focus or H PHASE.	9,12

SPECIFICATIONS

NOTE : This specifications are subject to change without notice.

Table 11. Specifications

Item		Specification
Product name		Liquid crystal projector
Liquid crystal panel	Panel size	2.3 cm (0.9 type)
	Drive system	TFT active matrix
	Pixels	480,000 pixels (800 horizontal x 600 vertical)
Lens		Zoom lens F=1.7 ~ 2.0 f=37.5 ~ 45.1 mm
Lamp		160 W UHB
Speaker		1.0 W + 1.0W (Stereo)
Power supply		AC100 ~ 120V, 2.8A / AC220 ~ 240V, 1.2A
Power consumption		250W
Temperature range		0 ~ 35°C (Operating)
Size		298 (W) x 94.6 (H) x 228 (D) mm
Weight (mass)		3.25 kg
RGB signal input	RGB IN 1/2	Video: Analog 0.7Vp-p, 75Ω terminator (positive) H/V. sync.: TTL level (positive/negative) Composite sync.: TTL level D-sub 15-pin shrink jack
	AUDIO IN 1/2	200mVrms, 50 kΩ (max. 3.0Vp-p) Stereo mini jack
Video signal input	VIDEO IN	1.0Vp-p, 75Ω terminator RCA jack
	S-VIDEO IN	Brightness signal: 1.0Vp-p, 75Ω terminator Color signal: 0.286Vp-p (burst signal), 75Ω terminator Mini DIN 4-pin jack
	AUDIO IN R/L	200mVrms, 50 kΩ (max. 3.0Vp-p) RCA jack
Signal output	RGB OUT	Video: Analog 0.7Vp-p, 75Ω output impedance (positive) H/V. sync.: TTL level (positive/negative) Composite sync.: TTL level D-sub 15-pin shrink jack
	AUDIO OUT	200mVrms, output impedance 1 kΩ (max. 3.0Vp-p) Stereo mini jack
Control functions	CONTROL	D-sub 15-pin shrink plug
	USB	USB jack (B type)

WARRANTY AND AFTER-SERVICE

If a problem occurs with the equipment, first refer to the P.20 “TROUBLESHOOTING” section and run through the suggested checks. If this does not resolve the problem contact your dealer or service company. If repairs are possible, and desirable, they will be charged.

Dimension Diagram

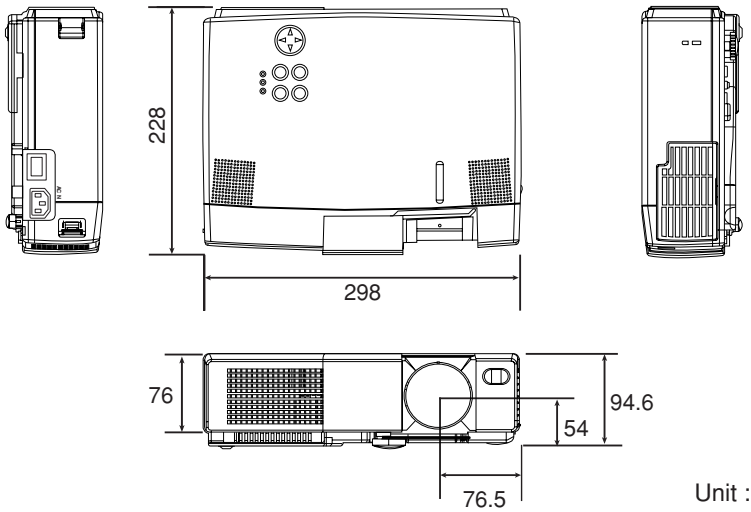

Unit : mm

RGB Signal Pin Assignment

Pin No	Signal	Pin No	Signal
1	Video input Red	11	-
2	Video input Green	12	RGB IN 1: SDA(DDC)
3	Video input Blue		RGB IN 2: -
4	-		RGB OUT: -
5	Ground	13	H. sync./ Composite sync.
6	Ground Red		
7	Ground Green	14	Vertical sync
8	Ground Blue	15	RGB IN 1: SCL(DDC)
9	-		RGB IN 2: -
10	Ground		RGB OUT: -

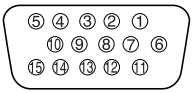

D-sub 15-pin shrink jack

S-Video Signal Pin Assignment

Pin No	Signal
1	Color:0.286Vp-p (burst signal),75Ω terminator
2	Brightness:1.0Vp-p, 75Ω terminator
3	Ground
4	Ground

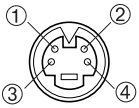

mini DIN 4-pin

Example of computer signal

Resolution H × V	fH (kHz)	fV (Hz)	Rating	Signal mode	Display mode
720 × 400	37.9	85.0	VESA	TEXT	Zoom in
640 × 480	31.5	59.9	VESA	VGA (60Hz)	Zoom in
640 × 480	35.0	66.7		Mac13"mode	Zoom in
640 × 480	37.9	72.8	VESA	VGA (72Hz)	Zoom in
640 × 480	37.5	75.0	VESA	VGA (75Hz)	Zoom in
640 × 480	43.3	85.0	VESA	VGA (85Hz)	Zoom in
800 × 600	35.2	56.3	VESA	SVGA (56Hz)	
800 × 600	37.9	60.3	VESA	SVGA (60Hz)	
800 × 600	48.1	72.2	VESA	SVGA (72Hz)	
800 × 600	46.9	75.0	VESA	SVGA (75Hz)	
800 × 600	53.7	85.1	VESA	SVGA (85Hz)	
832 × 624	49.7	74.5		Mac16"mode	Zoom out
1024 × 768	48.4	60.0	VESA	XGA (60Hz)	Zoom out
1024 × 768	56.5	70.1	VESA	XGA (70Hz)	Zoom out
1024 × 768	60.0	75.0	VESA	XGA (75Hz)	Zoom out
1024 × 768	68.7	85.0	VESA	XGA (85Hz)	Zoom out
1280 × 1024	64.0	60.0	VESA	SXGA (60Hz)	Zoom out *

NOTE:

- Some computers may have multiple display screen modes. Use of some of these modes will not be possible with this projector.
- Be sure to check jack type, signal level, timing and resolution before connecting this projector to a computer.
- Depending on the input signal, full-size display may not be possible in some cases. Refer to the number of display pixels above.

* It becomes the simple display of thinning out data.

Initial set signals

The following signals are used for the initial settings.
The signal timing of some computer models may be different. In such case, refer to adjust the V.POSIT and H.POSIT of the menu.

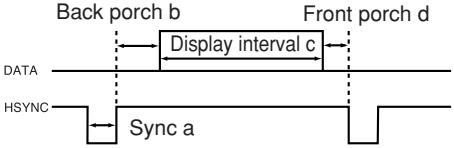

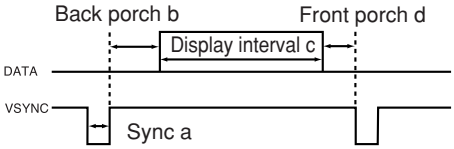

Computer / Signal	Horizontal signal timing (μs)			
	a	b	c	d
TEXT	2.0	3.0	20.3	1.0
VGA (60Hz)	3.8	1.9	25.4	0.6
Mac 13"mode	2.1	3.2	21.2	2.1
VGA (72Hz)	1.3	3.8	20.3	1.0
VGA (75Hz)	2.0	3.8	20.3	0.5
VGA (85Hz)	1.6	2.2	17.8	1.6
SVGA (56Hz)	2.0	3.6	22.2	0.7
SVGA (60Hz)	3.2	2.2	20.0	1.0
SVGA (72Hz)	2.4	1.3	16.0	1.1
SVGA (75Hz)	1.6	3.2	16.2	0.3
SVGA (85Hz)	1.1	2.7	14.2	0.6
Mac 16"mode	1.1	3.9	14.5	0.6
XGA (60Hz)	2.1	2.5	15.8	0.4
XGA (70Hz)	1.8	1.9	13.7	0.3
XGA (75Hz)	1.2	2.2	13.0	0.2
XGA (85Hz)	1.0	2.2	10.8	0.5
1280×1024 (60Hz)	1.0	2.3	11.9	0.4

Computer / Signal	Vertical signal timimg (lines)			
	a	b	c	d
TEXT	3	42	480	1
VGA (60Hz)	2	33	480	10
Mac 13"mode	3	39	480	3
VGA (72Hz)	3	28	480	9
VGA (75Hz)	3	16	480	1
VGA (85Hz)	3	25	480	1
SVGA (56Hz)	2	22	600	1
SVGA (60Hz)	4	23	600	1
SVGA (72Hz)	6	23	600	37
SVGA (75Hz)	3	21	600	1
SVGA (85Hz)	3	27	600	1
Mac 16"mode	3	39	624	1
XGA (60Hz)	6	29	768	3
XGA (70Hz)	6	29	768	3
XGA (75Hz)	3	28	768	1
XGA (85Hz)	3	36	768	1
1280×1024 (60Hz)	3	38	1024	1

Connection to the Mouse Control

1. PS/2, ADB or Serial Mouse

(1) Turn off the projector and computer, and connect the two units with the appropriate cable. For PS/2 mouse control (for IBM and compatible), use the enclosed mouse cable. For others, consult your dealer.
(2) Disconnect the USB cable from the projector if it is connected. Then turn on the projector.
(3) Turn on the computer.
(4) Start the mouse function. If the mouse has not been started, reboot the computer (soft reboot or reboot buttons). Refer to the descriptions of “DISC PAD” and “MOUSE/RIGHT button” of page 4.

2. USB Mouse

(1) Connect the projector and computer with a suitable commercially available USB cable. Consult your dealer to get the cable, if you need.
(2) Start the mouse function. Refer to the descriptions of “DISC PAD” and “MOUSE/RIGHT button” of page 4.

NOTE:

- Before connecting, read the instruction manuals of the devices to be connected.
- In the case of notebook type computers with an internal pointing device, the mouse control function will not work unless the internal pointing device is disabled. In such case, disable the internal pointing device and change the BIOS setting to select an external mouse before the operations described in (1) to (5) above.
  Also, some computers may not have a utility program to operate a mouse.
  Refer to the computer hardware manual for detail.

PS/2 Mouse

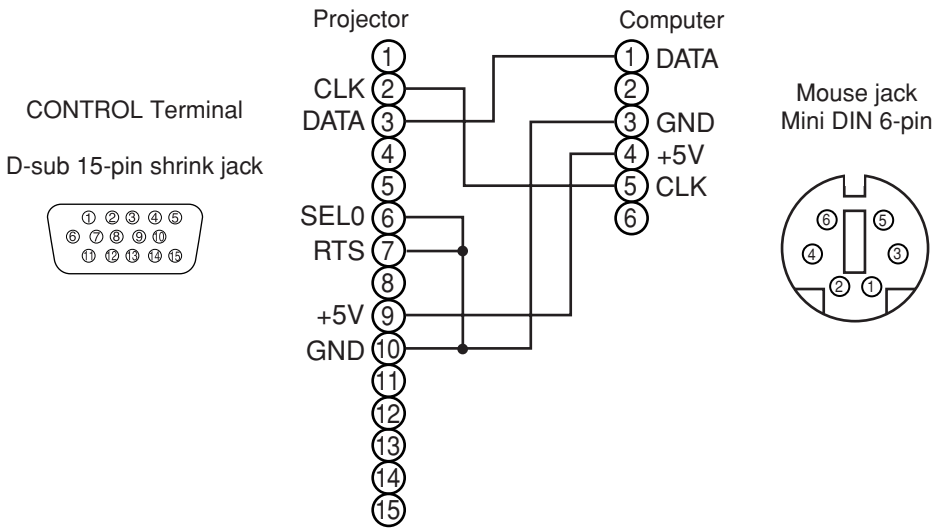

ADB Mouse

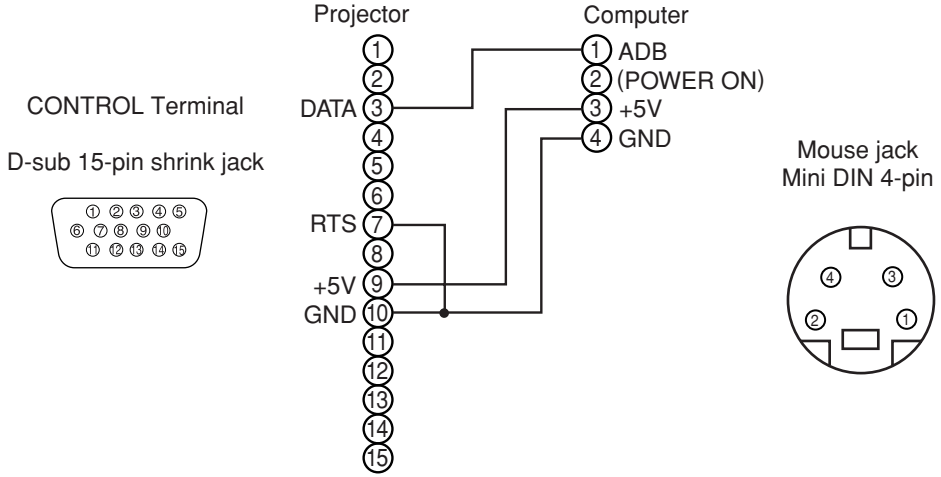

Serial Mouse

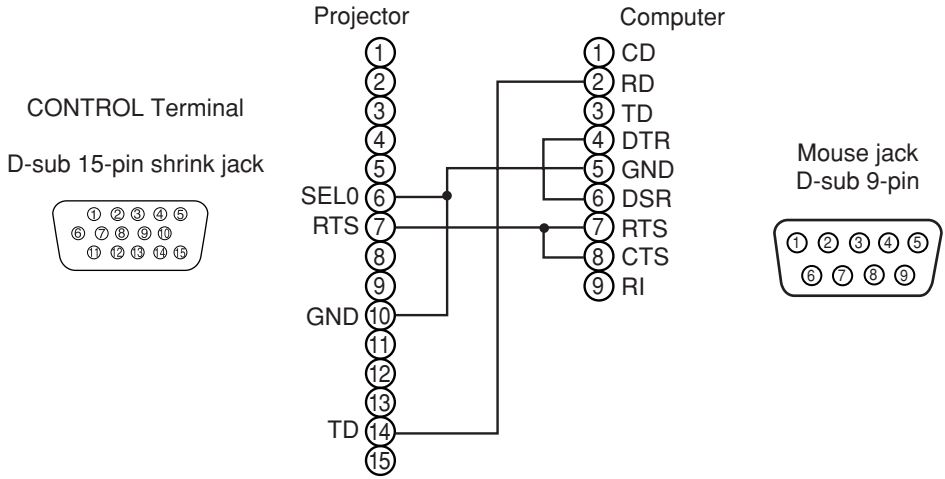

USB Mouse

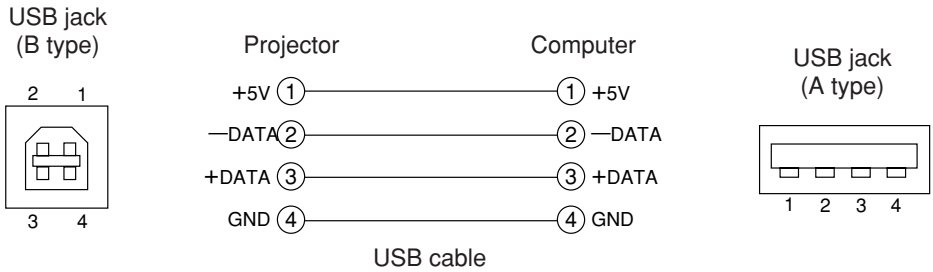

RS-232C communication

(1) Turn off the projector and computer power supplies and connect with the RS-232C cable.
(2) Turn on the computer power supply and, after the computer has started up, turn on the projector power supply.

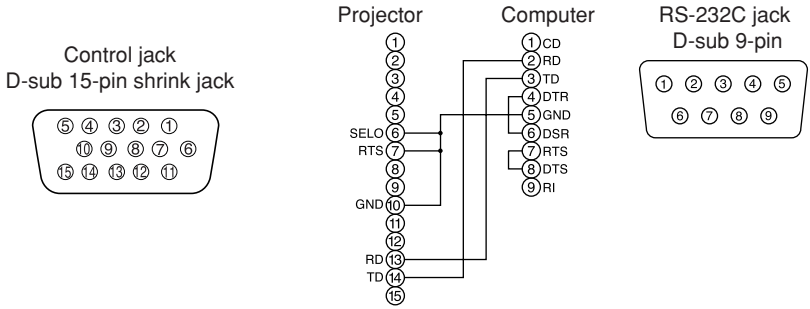

Communications setting

19200bps, 8N1

1 Protocol

Consist of header (7 bytes) + command data (6 bytes).

2 Header

BE + EF + 03 + 06 + 00 + CRC_low + CRC_high
CRC_low : Lower byte of CRC flag for command data.
CRC_high : Upper byte of CRC flag for command data.

3 Command data

Command data chart

byte_0	byte_1	byte_2	byte_3	byte_4	byte_5
Action		Type		Setting code	
low	high	low	high	low	high

Action (byte_0 - 1)

Action	Classification	Content
1	SET	Change setting to desired value.
2	GET	Read projector internal setup value.
4	INCREMENT	Increment setup value by 1.
5	DECREMENT	Decrement setup value by 1.
6	EXECUTE	Run a command.

Requesting projector status (Get command)

(1) Send the request code Header + Command data (‘02H’+‘00H’+ type (2 bytes) +‘00H’+‘00H’) from the computer to the projector.
(2) The projector returns the response code ‘1DH’+ data (2 bytes) to the computer.

Changing the projector settings (Set command)

(1) Send the setting code Header + Command data (‘01H’+‘00H’+ type (2 bytes) + setting code (2 bytes)) from the computer to the projector.
(2) The projector changes the setting based on the above setting code.
(3) The projector returns the response code ‘06H’ to the computer.

Using the projector default settings (Reset Command)

(1) The computer sends the default setting code Header + Command data (‘06H’+‘00H’+ type (2 bytes) +‘00H’+‘00H’) to the projector.
(2) The projector changes the specified setting to the default value.
(3) The projector returns the response code ‘06H’ to the computer.

Increasing the projector setting value (Increment command)

(1) The computer sends the increment code Header + Command data (‘04H’+‘00H’+ type (2 bytes) +‘00H’+‘00H’) to the projector.
(2) The projector in creases the setting value on the above setting code.
(3) The projector returns the response code ‘06H’ to the computer.

Decreasing the projector setting value (Decrement command)

(1) The computer sends the decrement code Header + Command data (‘05H’+‘00H’+ type (2 bytes) +‘00H’ + ‘00H’) to the projector.
(2) The projector decreases the setting value on the above setting code.
(3) The projector returns the response code ‘06H’ to the computer.

When a command sent by the projector cannot be understood by the computer

When the command sent by the projector cannot be understood, the error command ‘15H’ is returned by the computer. Some times, the projector ignores RS-232C commands during other works. If the error command ‘15H’ is returned, please send the same command again.

When data sent by the projector cannot be practice

When the command sent by the projector cannot be practiced, the the error code ‘1cH’ +‘xxxxH’ is returned.
When the data length is greater than indicated by the data length code, the projector will ignore the excess data code.
Conversely, when the data length is shorter than indicated by the data length code, an error code will be returned to the projector.

NOTE:

- Operation cannot be guaranteed when the projector receives an undefined command or data.
- Provide an interval of at least 40ms between the response code and any other code.
- The projector outputs test data when the power supply is switched ON, and when the lamp is lit. Ignore this data.
- Commands are not accepted during warm-up.

Command data chart

Names	Operation type		Header				CRC	Command data		
								Action	Type	Setting code
Blank Color	Set	Red	BE EF	03	06	00	3B D3	01 00	00 30	00 00
		Orange	BE EF	03	06	00	AB D2	01 00	00 30	01 00
		Green	BE EF	03	06	00	5B D2	01 00	00 30	02 00
		Blue	BE EF	03	06	00	CB D3	01 00	00 30	03 00
		Purple	BE EF	03	06	00	FB D1	01 00	00 30	04 00
		White	BE EF	03	06	00	6B D0	01 00	00 30	05 00
		Black	BE EF	03	06	00	9B D0	01 00	00 30	06 00
	Get		BE EF	03	06	00	08 D3	02 00	00 30	00 00
Mirror	Set	Normal	BE EF	03	06	00	C7 D2	01 00	01 30	00 00
		H Inverse	BE EF	03	06	00	57 D3	01 00	01 30	01 00
		V Inverse	BE EF	03	06	00	A7 D3	01 00	01 30	02 00
		H&V Inverse	BE EF	03	06	00	37 D2	01 00	01 30	03 00
	Get		BE EF	03	06	00	F4 D2	02 00	01 30	00 00
Freeze	Set	Normal	BE EF	03	06	00	83 D2	01 00	02 30	00 00
		Freeze	BE EF	03	06	00	13 D3	01 00	02 30	01 00
	Get		BE EF	03	06	00	B0 D2	02 00	02 30	00 00
Menu Color	Set	Red	BE EF	03	06	00	7F D3	01 00	03 30	00 00
		Orange	BE EF	03	06	00	EF D2	01 00	03 30	01 00
		Green	BE EF	03	06	00	1F D2	01 00	03 30	02 00
		BLUE	BE EF	03	06	00	8F D3	01 00	03 30	03 00
		Purple	BE EF	03	06	00	BF D1	01 00	03 30	04 00
		Transparent	BE EF	03	06	00	2F D0	01 00	03 30	05 00
		Gray	BE EF	03	06	00	DF D0	01 00	03 30	06 00
	Get		BE EF	03	06	00	4C D3	02 00	03 30	00 00
Startup	Set	Turn ON	BE EF	03	06	00	0B D2	01 00	04 30	00 00
		Turn OFF	BE EF	03	06	00	9B D3	01 00	04 30	01 00
	Get		BE EF	03	06	00	38 D2	02 00	04 30	00 00
Language	Set	English	BE EF	03	06	00	F7 D3	01 00	05 30	00 00
		Français	BE EF	03	06	00	67 D2	01 00	05 30	01 00
		Deutsch	BE EF	03	06	00	97 D2	01 00	05 30	02 00
		Español	BE EF	03	06	00	07 D3	01 00	05 30	03 00
		Italiano	BE EF	03	06	00	37 D1	01 00	05 30	04 00
		Norsk	BE EF	03	06	00	A7 D0	01 00	05 30	05 00
		Nederlands	BE EF	03	06	00	57 D0	01 00	05 30	06 00
		Português	BE EF	03	06	00	C7 D1	01 00	05 30	07 00
		Japanese	BE EF	03	06	00	37 D4	01 00	05 30	08 00
	Get		BE EF	03	06	00	C4 D3	02 00	05 30	00 00

Command data chart

Names	Operation type		Header	CRC	Command data		
					Action	Type	Setting code
Magnify	Get		BE EF 03 06 00	7C D2	02 00	07 30	00 00
	Increment		BE EF 03 06 00	1A D2	04 00	07 30	00 00
	Decrement		BE EF 03 06 00	CB D3	05 00	07 30	00 00
Timer	Get		BE EF 03 06 00	08 86	02 00	10 31	00 00
	Increment		BE EF 03 06 00	CE 86	04 00	10 31	00 00
	Decrement		BE EF 03 06 00	BF 87	05 00	10 31	00 00
Auto off	Get		BE EF 03 06 00	08 86	02 00	10 31	00 00
	Increment		BE EF 03 06 00	6E 86	04 00	10 31	00 00
	Decrement		BE EF 03 06 00	BF 87	05 00	10 31	00 00
Brightness Reset	Execute		BE EF 03 06 00	58 D3	06 00	00 70	00 00
Contrast Reset	Execute		BE EF 03 06 00	A4 D2	06 00	01 70	00 00
V.Position Reset	Execute		BE EF 03 06 00	E0 D2	06 00	02 70	00 00
H.Position Reset	Execute		BE EF 03 06 00	IC D3	06 00	03 70	00 00
H.Size Reset	Execute		BE EF 03 06 00	68 D2	06 00	04 70	00 00
Color Balance R Reset	Execute		BE EF 03 06 00	94 D3	06 00	05 70	00 00
Color Balance B Reset	Execute		BE EF 03 06 00	D0 D3	06 00	06 70	00 00
Aspect Reset	Execute		BE EF 03 06 00	2C D2	06 00	07 70	00 00
Video Format Reset	Execute		BE EF 03 06 00	38 D1	06 00	08 70	00 00
Sharpness Reset	Execute		BE EF 03 06 00	C4 D0	06 00	09 70	00 00
Color Reset	Execute		BE EF 03 06 00	80 D0	06 00	0A 70	00 00
Tint Reset	Execute		BE EF 03 06 00	7C D1	06 00	0B 70	00 00
Keystone Reset	Execute		BE EF 03 06 00	08 D0	06 00	0C 70	00 00
Mirror Reset	Execute		BE EF 03 06 00	F4 D1	06 00	0D 70	00 00
Blank Color Reset	Execute		BE EF 03 06 00	B0 D1	06 00	0E 70	00 00
Startup Reset	Execute		BE EF 03 06 00	4C D0	06 00	0F 70	00 00
Auto	Execute		BE EF 03 06 00	91 D0	06 00	0A 20	00 00
Blank on/off	Set	off	BE EF 03 06 00	FB D8	01 00	20 30	00 00
		on	BE EF 03 06 00	6B D9	01 00	20 30	01 00
	Get		BE EF 03 06 00	C8 D8	02 00	20 30	00 00
Timer on/off	Set	off	BE EF 03 06 00	07 D9	01 00	21 30	00 00
		on	BE EF 03 06 00	97 D8	01 00	21 30	01 00
	Get		BE EF 03 06 00	34 D9	02 00	21 30	00 00
Error Status	Get		BE EF 03 06 00	D9 D8	02 00	20 60	00 00
			(Example of Return) 00 00 (Normal) 01 00 (Cover-error) 02 00 (Fan-error) 03 00 (Lamp-error) 04 00 (Temp-error) 05 00 (Air flow-error) 06 00 (Lamp-Time-over)				

Command data chart

Names	Operation type		Header				CRC	Command data		
								Action	Type	Setting code
Power	Set	OFF	BE EF	03	06	00	2A D3	01 00	00 60	00 00
		ON	BE EF	03	06	00	BA D2	01 00	00 60	01 00
	Get		BE EF	03	06	00	19 D3	02 00	00 60	00 00
Input Source	Set	RGB1	BE EF	03	06	00	FE D2	01 00	00 20	00 00
		RGB2	BE EF	03	06	00	3E D0	01 00	00 20	04 00
		Video	BE EF	03	06	00	6E D3	01 00	00 20	01 00
		SVideo	BE EF	03	06	00	9E D3	01 00	00 20	02 00
	Get		BE EF	03	06	00	CD D2	02 00	00 20	00 00
Volume	Get		BE EF	03	06	00	31 D3	02 00	01 20	00 00
	Increment		BE EF	03	06	00	57 D3	04 00	01 20	00 00
	Decrement		BE EF	03	06	00	86 D2	05 00	01 20	00 00
Mute	Set	Normal	BE EF	03	06	00	46 D3	01 00	02 20	00 00
		Mute	BE EF	03	06	00	D6 D2	01 00	02 20	01 00
	Get		BE EF	03	06	00	75 D3	02 00	02 20	00 00
Brightness	Get		BE EF	03	06	00	89 D2	02 00	03 20	00 00
	Increment		BE EF	03	06	00	EF D2	04 00	03 20	00 00
	Decrement		BE EF	03	06	00	3E D3	05 00	03 20	00 00
Contrast	Get		BE EF	03	06	00	FD D3	02 00	04 20	00 00
	Increment		BE EF	03	06	00	9B D3	04 00	04 20	00 00
	Decrement		BE EF	03	06	00	4A D2	05 00	04 20	00 00
Color Balance R	Get		BE EF	03	06	00	01 D2	02 00	05 20	00 00
	Increment		BE EF	03	06	00	67 D2	04 00	05 20	00 00
	Decrement		BE EF	03	06	00	B6 D3	05 00	05 20	00 00
Color Balance B	Get		BE EF	03	06	00	45 D2	02 00	06 20	00 00
	Increment		BE EF	03	06	00	23 D2	04 00	06 20	00 00
	Decrement		BE EF	03	06	00	F2 D3	05 00	06 20	00 00
Keystone	Get		BE EF	03	06	00	B9 D3	02 00	07 20	00 00
	Increment		BE EF	03	06	00	DF D3	04 00	07 20	00 00
	Decrement		BE EF	03	06	00	0E D2	05 00	07 20	00 00
Aspect	Set	4:3	BE EF	03	06	00	9E D0	01 00	08 20	00 00
		16:9	BE EF	03	06	00	0E D1	01 00	08 20	01 00
		Small	BE EF	03	06	00	FE D1	01 00	08 20	02 00
	Get		BE EF	03	06	00	AD D0	02 00	08 20	00 00
Display Position at 16 : 9 or Small	Set	Default	BE EF	03	06	00	62 D1	01 00	09 20	00 00
		Bottom	BE EF	03	06	00	F2 D0	01 00	09 20	01 00
		Top	BE EF	03	06	00	02 D0	01 00	09 20	02 00
	Get		BE EF	03	06	00	51 D1	02 00	09 20	00 00

Command data chart

Names	Operation type		Header				CRC	Command data		
								Action	Type	Setting code
V.Position	Get		BE EF	03	06 00		0D 83	02 00	00 21	00 00
	Increment		BE EF	03	06 00		6B 83	04 00	00 21	00 00
	Decrement		BE EF	03	06 00		BA 82	05 00	00 21	00 00
H.Position	Get		BE EF	03	06 00		F1 82	02 00	01 21	00 00
	Increment		BE EF	03	06 00		97 82	04 00	01 21	00 00
	Decrement		BE EF	03	06 00		46 83	05 00	01 21	00 00
H.Size	Get		BE EF	03	06 00		B5 82	02 00	02 21	00 00
	Increment		BE EF	03	06 00		D3 82	04 00	02 21	00 00
	Decrement		BE EF	03	06 00		02 83	05 00	02 21	00 00
H.Phase	Get		BE EF	03	06 00		49 83	02 00	03 21	00 00
	Increment		BE EF	03	06 00		2F 83	04 00	03 21	00 00
	Decrement		BE EF	03	06 00		FE 82	05 00	03 21	00 00
Sharpness	Get		BE EF	03	06 00		F1 72	02 00	01 22	00 00
	Increment		BE EF	03	06 00		97 72	04 00	01 22	00 00
	Decrement		BE EF	03	06 00		46 73	05 00	01 22	00 00
Color	Get		BE EF	03	06 00		B5 72	02 00	02 22	00 00
	Increment		BE EF	03	06 00		D3 72	04 00	02 22	00 00
	Decrement		BE EF	03	06 00		02 73	05 00	02 22	00 00
Tint	Get		BE EF	03	06 00		49 73	02 00	03 22	00 00
	Increment		BE EF	03	06 00		2F 73	04 00	03 22	00 00
	Decrement		BE EF	03	06 00		FE 72	05 00	03 22	00 00
Video Format	Set	Auto	BE EF	03	06 00		9E 75	01 00	00 22	0A 00
		NTSC	BE EF	03	06 00		FE 71	01 00	00 22	04 00
		PAL	BE EF	03	06 00		6E 70	01 00	00 22	05 00
		SECAM	BE EF	03	06 00		6E 75	01 00	00 22	09 00
		NTSC 4.43	BE EF	03	06 00		5E 72	01 00	00 22	02 00
		M-PAL	BE EF	03	06 00		FE 74	01 00	00 22	08 00
		N-PAL	BE EF	03	06 00		0E 71	01 00	00 22	07 00
	Get		BE EF	03	06 00		0D 73	02 00	00 22	00 00

REGULATORY NOTICES

FCC Statement Warning

WARNING: This equipment has been tested and found to comply with the limits for a Class B digital device, pursuant to Part 15 of the FCC Rules. These limits are designed to provide reasonable protection against harmful interference in a residential installation. This equipment generates, uses, and can radiate radio frequency energy and, if not installed and used in accordance with the instructions, may cause harmful interference to radio communications. However, there is no guarantee that interference will not occur in a particular installation. If this equipment does cause harmful interference to radio or television reception, which can be determined by turning the equipment off and on, the user is encouraged to try to correct the interference by one or more of the following measures:

- Reorient or relocate the receiving antenna.
- Increase the separation between the equipment and receiver.
- Connect the equipment into an outlet on a circuit different from that to which the receiver is connected.
- Consult the dealer or an experienced radio/TV technician for help.

INSTRUCTIONS TO USERS: This equipment complies with the requirements of FCC (Federal Communication Commission) equipment provided that the following conditions are met.

The cables (Power cord, RGB cable and other cables) may have to be used with the core set to the projector side. Use the cables which are included with the projector or specified.

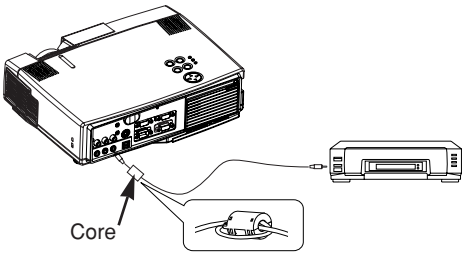

CAUTION: Changes or modifications not expressly approved by the party responsible for compliance could void the user's authority to operate the equipment.

For the Customers in CANADA

NOTICE: This Class B digital apparatus complies with Canadian ICES-003.

Pour les utilisateurs au Canada

AVIS: Cet appareil numérique de la Classe B est conforme à la norme NMB-003 du Canada.