USA's primary source for projector lamps
myprojectorlamps

PROJECTOR OWNER'S MANUAL

Epson
Pro Z8000WUNL / Z8050WNL

Need a replacement lamp for this projector?
www.myprojectorlamps.com

Original manufacturer manual, provided unmodified as a courtesy of MyProjectorLamps.com.
All trademarks belong to their respective owners.

EPSON®
EXCEED YOUR VISION

PowerLite® Pro Z8000WUNL/Z8050WNL

User's Guide

Notations Used in This Guide

- **Safety indications**

The documentation and the projector use graphical symbols to show how to use the projector safely.
Please understand and respect these caution symbols in order to avoid injury to persons or property.

Warning:	This indicates information that, if ignored, could possibly result in personal injury or even death due to incorrect handling.
Caution:	This indicates information that, if ignored, could possibly result in personal injury or physical damage due to incorrect handling.

- **General information indications**

☛	Indicates a page where detailed information regarding a topic can be found.
Procedure	Indicates operating methods and the order of operations. The procedure indicated should be carried out in the order of the numbered steps.
[(Name)]	Indicates the name of the buttons on the Remote Control or the Control panel. Example: [ESC] button
"(Menu Name)" **Brightness** (Boldface)	Indicates the configuration menu items. Example: **Select "Brightness" from the Image menu.** **Image** menu - **Brightness**

Notations Used in This Guide

Introduction

About Your Documentation 8

Projector Features 9

Ease of use when installed on a ceiling mount 9
Reliability you can depend on 10
Large Projection Area and Precise Colors 10
Enhanced security functions 11
Easy to handle 11
Using the projector over a network (PowerLite Pro Z8050WNL only) 11

Part Names and Functions 12

Front/Top 12
Interface 14
Rear 15
Remote Control 17

Unpacking the Projector 20

Positioning the Projector 21

Removing and Attaching the Interface Cover 28

Removing 28
Attaching 28

Connecting the Projector to Your Equipment 29

Connecting to a Computer 29
Connecting to the VGA Port 29
Connecting to the BNC Ports 29
Connecting to the HDMI Port 30
Connecting to the DVI-D Port 30
Connecting to Video Equipment 31
Connecting to the HDMI Port 31
Connecting to the DVI-D Port 31
Connecting a Component Video Source 32
Connecting an S-Video Source 32
Connecting a Composite Video Source 33

Turning the Projector On and Off 34

Adjusting the Image 35

Adjusting the Position 35
Focusing the Image 36
Zooming the Image 36
Fixing a Tilted Image 37

Useful Functions

Correcting Distortion in the Projected Image 39

Correcting Distortion with Quick Corner 40

Changing the Projected Image 43

Automatically Detect Input Signal and Change the Projected Image (Source Search) 43
Switch to the target image using the Remote Control 44

Functions for Enhancing Projection 45

Selecting the Projection Quality (Selecting Color Mode) 45
Setting the Auto Iris 46
Hiding the Image Temporarily (Shutter) 46
Freezing the Image (Freeze) 47

Changing the Aspect Ratio 47
Changing methods 47
Changing the Aspect for video equipment images 48
Changing the Aspect for computer images 49
Pointer Function (Pointer) 52
Enlarging Part of the Image (E-Zoom) 53

Limitation of the Number of the Target Projectors when Using Multiple Projectors 55
Setting the Projector ID 56
Checking the Projector ID 56
Setting the Remote Control ID 57

Correcting Color for Multiple Projectors (Multi-Screen Color Adjustment) 58
Summary of Correction Procedure 58
Correction Method 58

Security Functions 60
Managing Users (Password Protect) 60
Type of Password Protect 60
Setting Password Protect 60
Entering the Password 62
Restricting Button Operation 62
Setting Control Panel Lock 62
Lens Operation Lock 63
Theft Deterrent Lock 64
Installing the wire lock 64

Configuration Menu

Using the Configuration Menu 66

List of Functions 67
Image Menu 67
Signal Menu 69
Settings Menu 71
Extended Menu 73
Network Menu (PowerLite Pro Z8000WUNL) 75
Network Menu (PowerLite Pro Z8050WNL) 78
Notes on operating the network menu 80
Soft keyboard operations 81
Basic Menu 82
Wireless LAN Menu (only when the optional Wireless 802.11a/b/g Module is installed) 83
Security menu (Only available when the optional Wireless 802.11a/b/g/ Module is installed) 85
Wired LAN Menu 90
Mail Menu 91
Others Menu 92
Reset Menu 93
Info Menu (Display Only) 94
Reset Menu 95

Projector Menu and Options List 96

Troubleshooting

Using the Help Screen 99

Problem Solving 101

Reading the Indicators. 102

⏻ Indicator is lit or flashing red. 103

☼ 🌡 ▥ Indicator is flashing or lit 105

When the Indicators Provide No Help 107

Problems relating to images. 108

Problems when projection starts 113

Other problems. 114

Where to Get Help 116

Internet Support 116

Speak to a Support Representative. 116

Purchase Supplies and Accessories. 116

Appendix

Installation Methods 118

Cleaning 120

Cleaning the Projector's Surface 120

Cleaning the Lens 120

Cleaning the Air filter. 120

Replacing Consumables 123

Replacing the Remote Control Batteries. 123

Replacing the Lamp 124

Lamp replacement period. 124

How to replace the lamp 124

Resetting the Lamp Hours. 126

Replacing the Air Filter 127

Air filter replacement period 127

How to replace the air filter 127

Optional Accessories and Consumables. 129

Optional accessories 129

Consumables 129

Notes on Transportation. 130

Moving Nearby. 130

When Transporting. 130

Preparing packaging. 130

Notes when packing and transporting. 130

Saving a User's Logo. 131

Making a WPS (Wi-Fi Protected Setup) Connection with a Wireless LAN Access Point (PowerLite Pro Z8050WNL only). 133

Connection Setup Method 133

Making a Connection Using the Push Button Method 134

Making a connection using the PIN Code Method. 135

Connecting a LAN Cable 138

Connecting to an external monitor 139

Removing and Attaching the Projector Lens Unit. 140

Removing. 140

Attaching 141

Reading Problem Mail Notification Function 144

ESC/VP21 Commands 146

Command List 146
Cable Layouts 147
Serial Connection 147
Communications protocol 147

About PJLink 148

Supported Monitor Displays 149

Supported Monitor Displays for PowerLite Pro Z8000WUNL 149
Computer signals (analog RGB) 149
Component Video 150
Composite Video/S-Video 151
Input signal from the HDMI/DVI-D input port 152
Supported Monitor Displays for PowerLite Pro Z8050WNL 153
Computer signals (analog RGB) 153
Component Video 154
Composite Video/S-Video 154
Input signal from the HDMI/DVI-D input port 155

Specifications 156

Projector General Specifications 156
Connectors 158
Software System Requirements 160

Appearance 161

Glossary 162

General Notes 165

Copyright Notice 165
Trademarks 165
Important Safety Instructions 165
FCC Compliance Statement 168
For United States Users 168
For Canadian Users 169

Introduction

This chapter explains the projector's documentation, features, and part names.

About Your Documentation

This *User's Guide* contains all the information you need to set up and use your projector. The following guides are also included with your projector:

- *Quick Reference sheet*

  Provides information for connecting the projector to your equipment, displaying and adjusting the image, using the remote control, and solving display problems.

- On-screen *EasyMP Monitor Operation Guide*

  Provides information for monitoring and controlling the projector over a network.

- On-screen *Network Operation Guide* (PowerLite Pro Z8050WNL only)

  Provides information for projecting images over a network, as well as monitoring and controlling the projector over a network.

Ease of use when installed on a ceiling mount

Centered lens

The lens is positioned in the center of the projector so it is well balanced and is easy to mount on a ceiling. This also makes it easy to line up the screen and the projector.

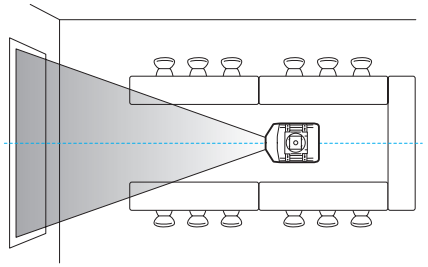

Equipped with electric lens shift, zoom and focus functions

The lens shift function allows you to adjust the position of the projected image along the horizontal and vertical axes which opens up a wide variety of installation locations.

The lens shift, zoom, and focus functions can be operated with a remote control so operation is easy even if the projector is mounted on the ceiling.

Six optional lenses are available

You can select the best lens according to the projection distance and purpose. All the optional lenses are bayonet-type which allows you to simply and easily replace and install the optional lenses.

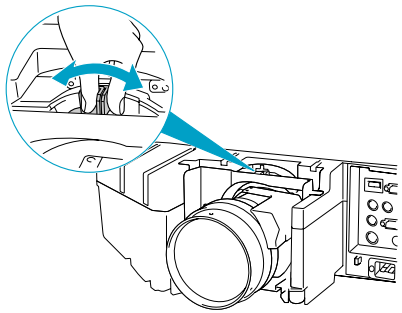

Horizontal and vertical installation possible

The projector can be pointed either up or down to project images on the floor or ceiling. This makes it an effective communication tool that lets you express your ideas with great impact.

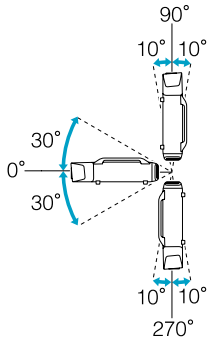

A design that harmonizes with the surrounding environment, and makes the installation easy

The projector's sophisticated design has a cable cover in which cables are hidden for a clean exterior appearance.

The bar type handles are designed to make moving and installing the projector easy so it can be handled safely. The ceiling mount is attached to these handles when you mount the projector on the ceiling. The projector does not need to be turned upside down so installation is easy. The initial settings can be easily set as you look at the screen because the control panel is located on the back of the projector.

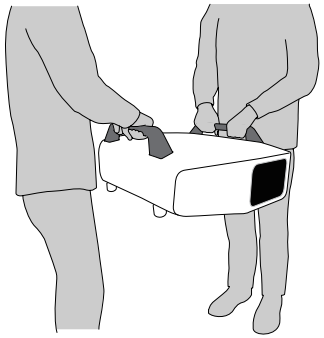

Easy maintenance

You can replace the lamp by opening a cover and pulling it straight out of the back of the projector without using a screwdriver.

There is only one air filter so cleaning and replacement are easy. The lamp and air filter can be safely replaced even when mounted on the ceiling because their covers do not fall off even if you release them.

Reliability you can depend on

The projector is equipped with two lamps. Even if one of the lamps breaks, you can continue projecting with the other lamp and avoid disrupting important presentations.

Large Projection Area and Precise Colors

Equipped with a high-resolution WUXGA panel (PowerLite Pro Z8000WUNL only)

You can project a large amount of information on the screen. Viewers can see the information at a glance without having to scroll or switch screens.

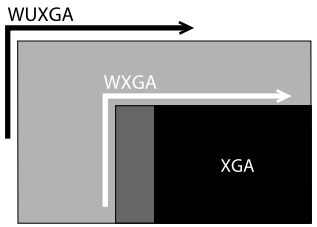

Epson Cinema Filter supports the color gamut for digital cinema.

Select Theater or sRGB in Color Mode to use Epson Cinema Filter for 100% reproduction of the color gamut used for digital cinema. As a result, this reproduces colors that are full and deep.

Precise color adjustments

As well as Color Mode, you can also adjust the image's absolute color temperature and the strength of each RGB color. Also, you can adjust the hue, saturation, and brightness of R, G, B, C, M, and Y.

Enhanced security functions

Password Protect to restrict and manage users

By setting a Password you can restrict who can use the projector.

Control Panel Lock restricts button operation on the Control panel.

You can use this to prevent people from changing projector settings without permission at events, in schools, and so on.

Equipped with various theft deterrent devices

The projector is equipped with the following types of theft deterrent security devices.

- Security slot
- Security cable installation point

Easy to handle

Direct power On/Off

In places where power is managed centrally, such as in a conference room, the projector can be set to power on and off automatically when the power source to which the projector is connected is switched on or off. ☛ p.74

No cool down delay

After turning the projector's power off, you can disconnect the projector's power cable without having to wait for the projector to cool down.

Using the projector over a network (PowerLite Pro Z8050WNL only)

You can use the included software to deliver presentations and meetings over a network. See your *Network Operation Guide* for more information.

Connect to the projector from computers via a network

You can use your existing network to share the projector from multiple computers. Documents can be projected from each computer without having to change any cables during meetings or presentations. Also, you don't have to worry about the distance between the computer and the projector.

Connecting wirelessly to a computer

When you install the optional Wireless 802.11a/b/g Module in the projector, you can connect wirelessly to a computer.

Front/Top

The illustration shows the projector with a standard zoom lens (not included) installed.

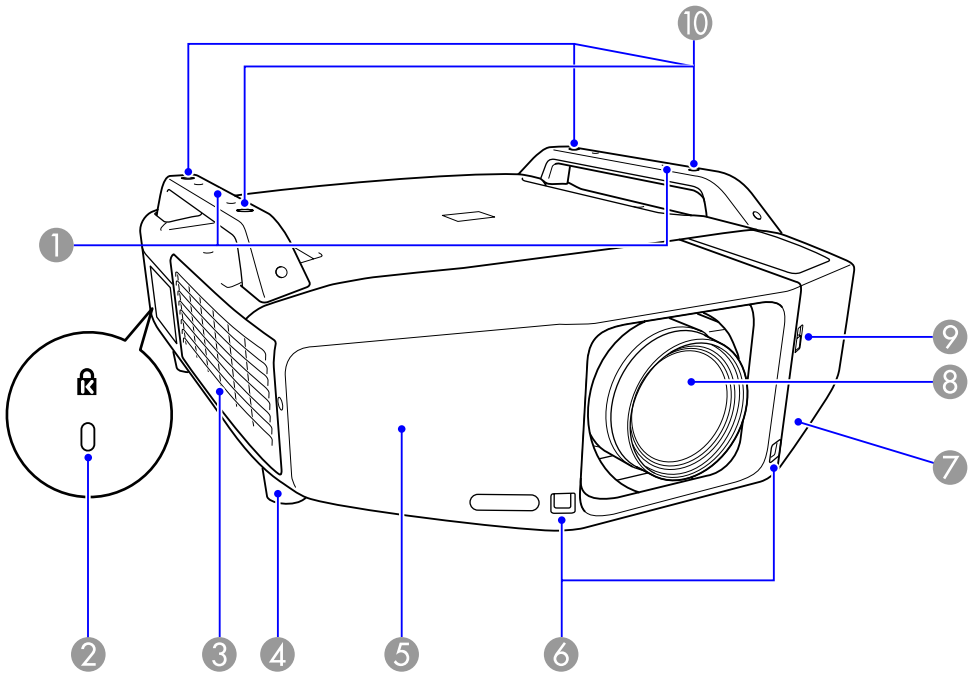

	Name	Function
1	**Handle**	Use these handles when carrying the projector. Also, you can pass an theft deterrent wire lock through the handles to secure the projector. **Warning:** *Do not carry the projector by yourself.* *Two people are needed to unpack or carry the projector.*
2	**Security slot( )**	The Security slot is compatible with the Microsaver Security System manufactured by Kensington®.
3	**Air intake vent (Air filter)**	Takes in air to cool the projector internally. If dust collects here it can cause the internal temperature to rise, and this can lead to problems with operation and shorten the optical engine's service life. Be sure to clean the Air filter regularly.
4	**Front adjustable foot**	When set up on a desk, turn to extend and retract to adjust the horizontal tilt. The front adjustable feet can be removed when the projector is mounted on the ceiling.
5	**Front cover**	Remove this cover to remove or install the lens unit when replacing the lens. This cover must be installed when using the projector.
6	**Remote Receiver**	Receives signals from the remote control.
7	**Interface cover**	Remove this cover to connect cables to the ports inside when connecting the projector to video equipment.
8	**Projection lens**	Images are projected through here.
9	**Interface cover open/close switch**	Opens and closes the interface cover.

	Name	Function
10	**Ceiling mount attachment points (Four points)**	Attach the optional Ceiling mount here when suspending the projector from a ceiling.

Interface

The following ports can be accessed by removing the interface cover. For information on how to remove the interface cover, see ☛ p.28. For information on how to connect your equipment to the projector, see ☛ p.29.

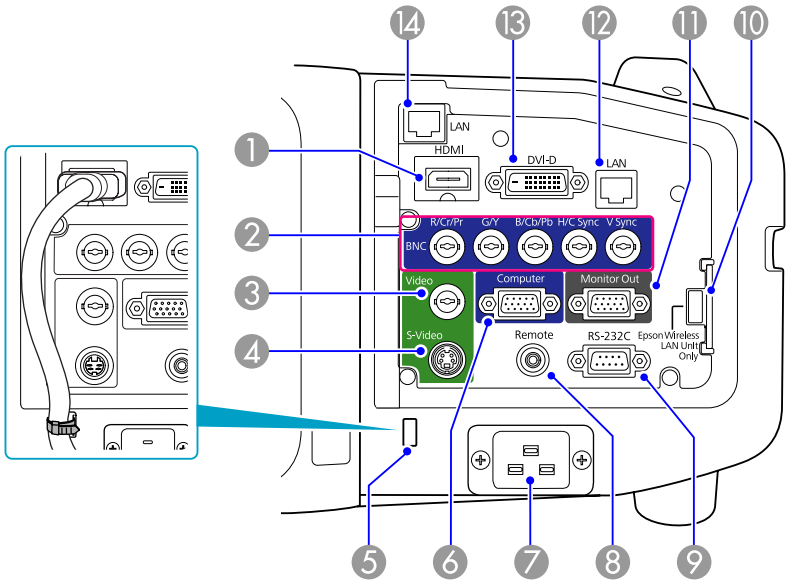

	Name	Function
1	**HDMI input port**	For video signals from HDMI compatible video equipment and computers. This projector is compatible with HDCP signals.
2	**BNC input port**	For analog RGB signals from a computer and component video signals from other video sources.
3	**Video input port**	For composite video signals from video sources.
4	**S-Video input port**	For S-video signals from video sources.

	Name	Function
5	**Cable holder**	When a thick heavy HDMI cable is connected to the HDMI input port, run a commercially available cable tie through this holder to prevent the cable from disconnecting.
6	**Computer input port**	For analog RGB signals from a computer and component video signals from other video sources.
7	**Power inlet**	Connects to the power cable.
8	**Remote port**	Connects the optional remote control cable set and inputs signals from the remote control. When the remote control cable is plugged into this port, the remote receiver on the projector is disabled.
9	**RS-232C port**	When controlling the projector from a computer or controller, connect it with an RS-232C cable. This port is for control use and should not normally be used.
10	**Wireless LAN Unit port (PowerLite Pro Z8050WNL only)**	Connects to the optional Wireless 802.11a/b/g Module.
11	**Monitor Out port**	Outputs to an external monitor the analog signal from the computer connected to the Computer input port or the BNC input port. This is not available for component video signals or other signals being input to any port other than the Computer input port or the BNC input port.
12	**LAN port (PowerLite Pro Z8000WUNL only)**	Connects to a LAN cable and then to a network.
13	**DVI-D input port**	For digital RGB signals from a computer's DVI-D output port. This projector is compatible with HDCP signals.

	Name	Function
14	**LAN port (PowerLite Pro Z8050WNL only)**	Connects to a LAN cable and then to a network.

Rear

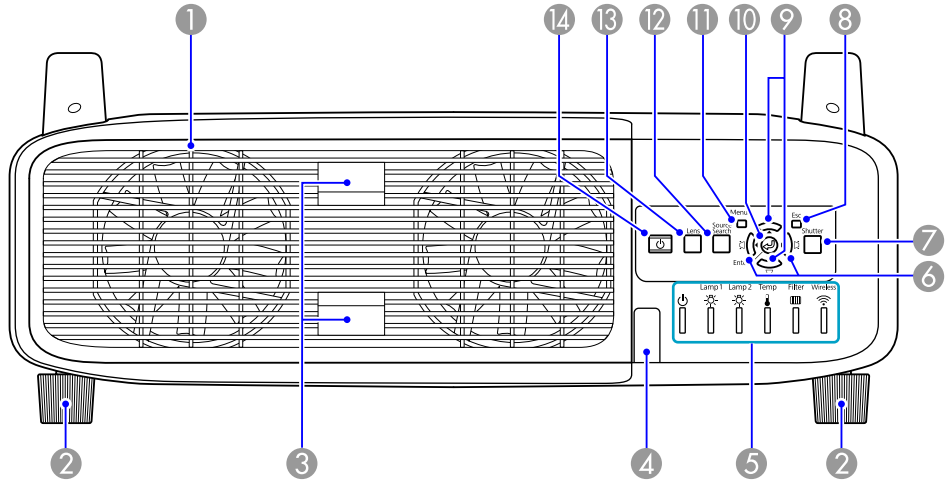

	Name	Function
1	**Air exhaust vent (Lamp cover)**	Exhaust vent for air used to cool the projector internally. Also, open this cover to replace the projector's lamps. **Warning:** *Do not place objects that may become warped or otherwise affected by heat near the Air exhaust vent and do not put your face or hands near the vent while projection is in progress.*
2	**Rear foot**	When set up on a desk, turn to extend and retract to adjust the horizontal tilt. The rear adjustable feet can be removed when the projector is installed on a ceiling.
3	**Lamp cover open tab**	Use these tabs to open the lamp cover.
4	**Remote Receiver**	Receives signals from the remote control.
5	**Status indicators**	The color of the indicators and whether they are flashing or lit indicate the status of the projector. The illustration shows the PowerLite Pro Z8050WNL. The PowerLite Pro Z8000WUNL does not have a wireless indicator.
6	**[◁/◀][▷/▶] button**	Corrects horizontal Keystone distortion. If pressed while the configuration menu or a Help screen is displayed, these buttons only have the [◀] and [▶] functions which select menu items and setting values.
7	**[Shutter] button**	Press this button to open or close the electric shutter. You can close the electric shutter to completely block a projection.
8	**[Esc] button**	Stops the current function. If pressed when the configuration menu is displayed, it moves to the previous menu level.
9	**[⏢/▲][⏢/▼] button**	Corrects vertical Keystone distortion. If pressed while the configuration menu or a Help screen is displayed, these buttons only have the [▲] and [▼] functions which select menu items and setting values.

Name		Function
10	**[Enter] button**	If pressed during projection of computer analog RGB signals, it automatically adjusts the Tracking, Sync., and Position to project the optimum image. When the configuration menu or a Help screen is displayed, it accepts and enters the current selection and moves to the next level.
11	**[Menu] button**	Displays and closes the configuration menu.
12	**[Source Search] button**	Changes to the next input source that is connected to the projector and is sending an image.
13	**[Lens] button**	Press this button to cycle through the focus, zoom, and lens shift settings to adjust the lens.
14	**[⏻] button**	Turns the projector power On or Off.

Remote Control

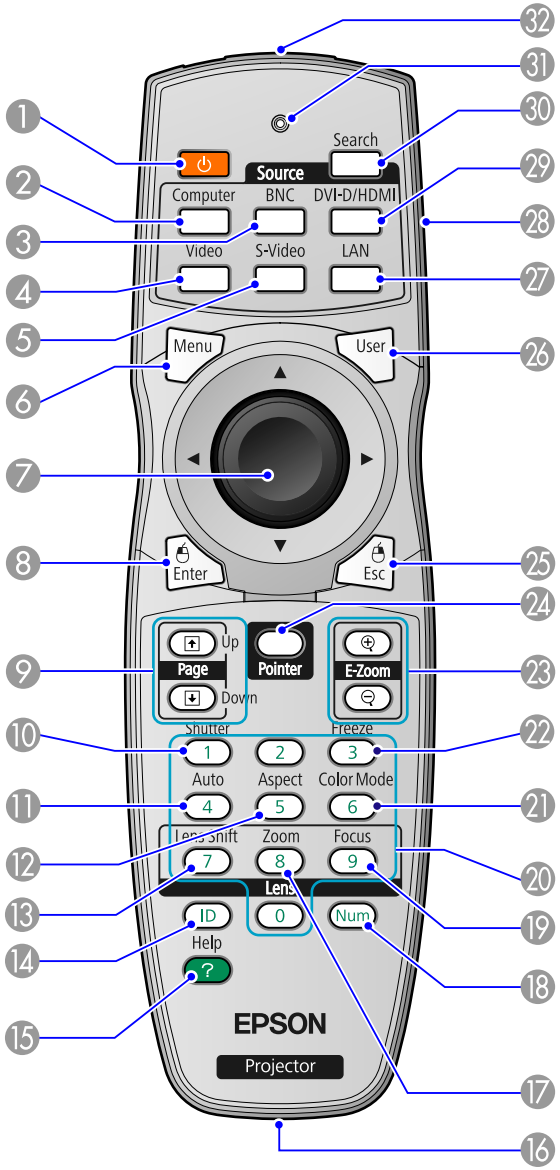

	Name	Function
1	**[⏻] button**	Turns the projector power On or Off.
2	**[Computer] button**	Changes to images from the Computer input port.
3	**[BNC] button**	Changes to images from the BNC input port.
4	**[Video] button**	Changes to images from the Video input port.
5	**[S-Video] button**	Changes to images from the S-Video input port.
6	**[Menu] button**	Displays and closes the configuration menu.
7	**[◎] button**	When the configuration menu or Help screen is displayed, it selects menu items and setting values. When using the optional wireless mouse receiver, use this button to move the pointer in the desired direction.
8	**[Enter] button**	When the configuration menu or a Help screen is displayed, it accepts and enters the current selection and moves to the next level. Acts as a mouse's left button when using the optional wireless mouse receiver.
9	**[Page] buttons [⇧][⇩]**	When using the optional wireless mouse receiver, you can change the PowerPoint file page during projection by pressing the page up/page down buttons.
10	**[Shutter] button**	Each time you press this button, the electric shutter closes or opens. You can close the electric shutter to completely block a projection.
11	**[Auto] button**	If pressed during projection of computer analog RGB signals, it automatically adjusts the Tracking, Sync., and Position to project the optimum image.

	Name	Function
12	**[Aspect] button**	The Aspect Ratio changes each time the button is pressed.
13	**[Lens Shift] button**	Press to adjust the lens shift.
14	**[ID] button**	Press to set the remote control ID.
15	**[Help] button**	Displays and closes the Help screen which shows you how to deal with problems if they occur.
16	**Remote port**	Connects the optional remote control cable set and outputs signals from the remote control. When the remote control cable is plugged into this remote port, the remote receiver is disabled.
17	**[Zoom] button**	Press to adjust the zoom.
18	**[Num] button**	Use this button to enter passwords, IP address from the Network, and so on.
19	**[Focus] button**	Press to adjust the focus.
20	**Numeric buttons**	Use this button to enter passwords, remote control IP settings, IP address from the Network, and so on.
21	**[Color Mode] button**	Each time the button is pressed, the Color Mode changes.
22	**[Freeze] button**	Images are paused or unpaused.
23	**[E-Zoom] buttons [⊕][⊖]**	The [⊕] button enlarges the image without changing the projection size. The [⊖] button reduces the parts of images that have been enlarged using the [⊕] button.
24	**[Pointer] button**	Press to activate the on screen pointer.

	Name	Function
25	**[Esc] button**	Stops the current function. If pressed when the configuration menu is displayed, it moves to the previous menu level. Acts as a mouse's right button when using the optional wireless mouse receiver.
26	**[User] button**	Press to assign a frequently used item from the six available configuration menu items. By pressing the button the assigned menu item selection/adjustment screen is displayed, allowing you to make one-touch settings/adjustments. Test Pattern is assigned as the default setting.
27	**[LAN] button**	Changes to images from EasyMP Network Projection (PowerLite Pro Z8050WNL only). This button does not function on the PowerLite Pro Z8000WUNL.
28	**ID switch**	Use this switch to enable (On)/disable (Off) ID settings for the remote control.
29	**[DVI-D/HDMI] button**	Each time you press this button, the image on the screen changes between the DVI-D and HDMI input ports.
30	**[Search] button**	Changes to the next input source that is connected to the projector and is sending an image.
31	**Indicators**	A light is emitted when outputting remote control signals.
32	**Remote control light-emitting area**	Outputs remote control signals.

When you use the remote control, make sure you are within the operating range of the projector's front or back remote receiver as shown in the diagram below.

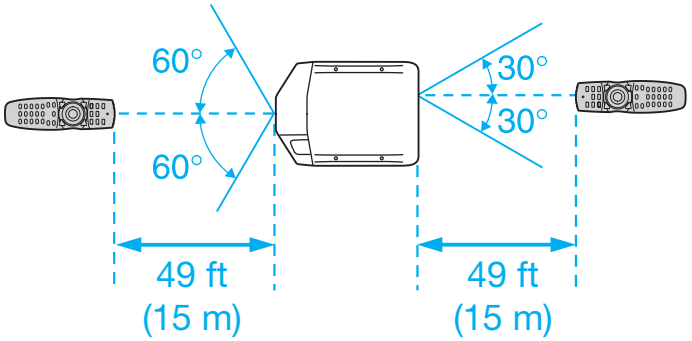

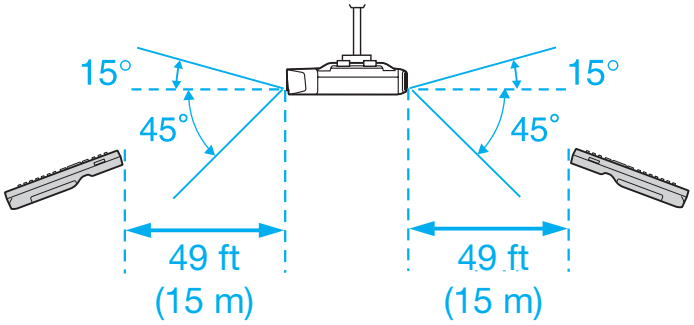

Unpacking the Projector

After unpacking the projector, make sure you have all the parts shown below:

Save all packaging in case you need to ship the projector. Always use the original packaging (or the equivalent) when you need to send the projector to another location. Before you move the projector, see the moving and transportation instructions. ☛ p.130

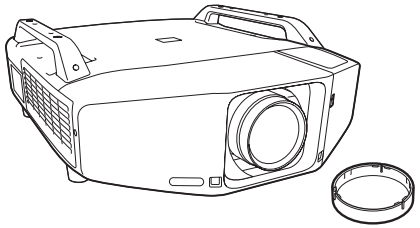

Projector and lens cap

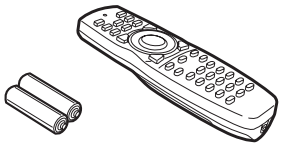

Remote control and 2 AA batteries

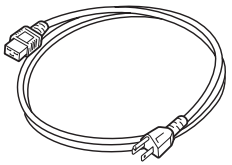

Power cord

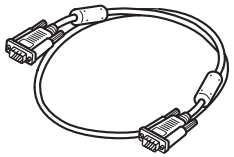

VGA cable

foot covers

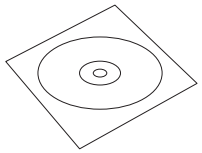

PDF manuals and registration CD-ROM

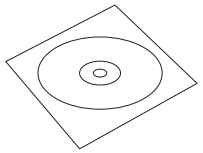

Projector software CD-ROM

Password Protected sticker

Positioning the Projector

If the projector isn't already installed in the room you're using, you'll probably want to place it on a table in front of the screen. This lets you stand in the front of the room, face the audience, and remain close enough to the equipment to be able to control it. Try to leave as much space as possible between the projector and the screen to get a good-size image.

Use the illustrations and tables below to help you determine placement. Image size increases with distance, but can vary depending on which lens you're using and whether you've adjusted the image with zoom or any other settings.

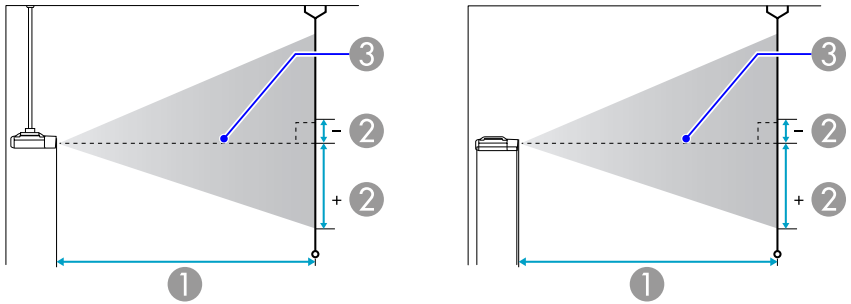

❶ Projection distance

❷ The distance from the center of the lens to the base of the screen. This changes depending on the setting for vertical lens shift.

❸ Center of lens

PowerLite Pro Z8000WUNL, 16:10 image, Rear projection wide lens (ELPLR04)

Screen or image size	Projection distance (1)	Offset from lens center (2)
60 inches	38 inches (97 cm)	15.9 inches (40 cm)
70 inches	45 inches (114 cm)	18.5 inches (47 cm)
80 inches	52 inches (131 cm)	21.2 inches (54 cm)
90 inches	58 inches (148 cm)	23.8 inches (61 cm)
100 inches	65 inches (165 cm)	26.5 inches (67 cm)
110 inches	72 inches (182 cm)	29.1 inches (74 cm)
120 inches	79 inches (200 cm)	31.8 inches (81 cm)

Screen or image size	Projection distance (1)	Offset from lens center (2)
200 inches	133 inches (337 cm)	53 inches (135 cm)
300 inches	200 inches (508 cm)	79.5 inches (202 cm)
500 inches	335 inches (852 cm)	132.5 inches (337 cm)

PowerLite Pro Z8000WUNL, 16:10 image, Wide zoom lens (ELPLW04)

Screen or image size	Projection distance (1) (Wide to Tele)	Offset from lens center (2)
60 inches	65 to 90 inches (166 to 229 cm)	38.5 to -6.7 inches (98 to -17 cm)
70 inches	77 to 105 inches (195 to 268 cm)	44.9 to -7.8 inches (114 to -20 cm)
80 inches	88 to 121 inches (224 to 307 cm)	51.4 to -9 inches (130 to -23 cm)
90 inches	99 to 136 inches (253 to 347 cm)	57.8 to -10.1 inches (147 to -26 cm)
100 inches	111 to 152 inches (282 to 386 cm)	64.2 to -11.2 inches (163 to -28 cm)
110 inches	122 to 167 inches (310 to 425 cm)	70.6 to -12.3 inches (179 to -31 cm)
120 inches	134 to 183 inches (339 to 464 cm)	77 to -13.4 inches (196 to -34 cm)
200 inches	225 to 306 inches (570 to 778 cm)	128.4 to -22.4 inches (326 to -57 cm)
300 inches	338 to 461 inches (859 to 1171 cm)	192.6 to -33.6 inches (489 to -85 cm)
500 inches	566 to 770 inches (1437 to 1957 cm)	320.9 to -55.9 inches (815 to -142 cm)

PowerLite Pro Z8000WUNL, 16:10 image, Standard zoom lens (ELPLS04)

Screen or image size	Projection distance (1) (Wide to Tele)	Offset from lens center (2)
60 inches	87 to 142 inches (221 to 361 cm)	38.5 to -6.7 inches (98 to -17 cm)
70 inches	102 to 166 inches (259 to 423 cm)	44.9 to -7.8 inches (114 to -20 cm)
80 inches	117 to 191 inches (297 to 484 cm)	51.4 to -9 inches (130 to -23 cm)
90 inches	132 to 215 inches (335 to 546 cm)	57.8 to -10.1 inches (147 to -26 cm)
100 inches	147 to 239 inches (374 to 607 cm)	64.2 to -11.2 inches (163 to -28 cm)
110 inches	162 to 263 inches (412 to 669 cm)	70.6 to -12.3 inches (179 to -31 cm)

Screen or image size	Projection distance (1) (Wide to Tele)	Offset from lens center (2)
120 inches	177 to 287 inches (450 to 730 cm)	77 to -13.4 inches (196 to -34 cm)
200 inches	297 to 481 inches (755 to 1222 cm)	128.4 to -22.4 inches (326 to -57 cm)
300 inches	448 to 723 inches (1137 to 1837 cm)	192.6 to -33.6 inches (489 to -85 cm)
500 inches	748 to 1207 inches (1900 to 3067 cm)	320.9 to -55.9 inches (815 to -142 cm)

PowerLite Pro Z8000WUNL, 16:10 image, Middle throw zoom lens 1 (ELPLM06)

Screen or image size	Projection distance (1) (Wide to Tele)	Offset from lens center (2)
60 inches	134 to 206 inches (340 to 524 cm)	38.5 to -6.7 inches (98 to -17 cm)
70 inches	157 to 241 inches (399 to 613 cm)	44.9 to -7.8 inches (114 to -20 cm)
80 inches	180 to 277 inches (458 to 702 cm)	51.4 to -9 inches (130 to -23 cm)
90 inches	204 to 312 inches (517 to 792 cm)	57.8 to -10.1 inches (147 to -26 cm)
100 inches	227 to 347 inches (576 to 881 cm)	64.2 to -11.2 inches (163 to -28 cm)
110 inches	250 to 382 inches (635 to 971 cm)	70.6 to -12.3 inches (179 to -31 cm)
120 inches	273 to 417 inches (694 to 1060 cm)	77 to -13.4 inches (196 to -34 cm)
200 inches	459 to 699 inches (1166 to 1775 cm)	128.4 to -22.4 inches (326 to -57 cm)
300 inches	691 to 1051 inches (1755 to 2669 cm)	192.6 to -33.6 inches (489 to -85 cm)
500 inches	1155 to 1755 inches (2934 to 4457 cm)	320.9 to -55.9 inches (815 to -142 cm)

PowerLite Pro Z8000WUNL, 16:10 image, Middle throw zoom lens 2 (ELPLM07)

Screen or image size	Projection distance (1) (Wide to Tele)	Offset from lens center (2)
60 inches	195 to 300 inches (495 to 761 cm)	38.5 to -6.7 inches (98 to -17 cm)
70 inches	229 to 351 inches (581 to 891 cm)	44.9 to -7.8 inches (114 to -20 cm)
80 inches	263 to 402 inches (668 to 1022 cm)	51.4 to -9 inches (130 to -23 cm)
90 inches	297 to 454 inches (754 to 1153 cm)	57.8 to -10.1 inches (147 to -26 cm)
100 inches	331 to 505 inches (841 to 1284 cm)	64.2 to -11.2 inches (163 to -28 cm)

Screen or image size	Projection distance (1) (Wide to Tele)	Offset from lens center (2)
110 inches	365 to 557 inches (927 to 1414 cm)	70.6 to -12.3 inches (179 to -31 cm)
120 inches	399 to 608 inches (1013 to 1545 cm)	77 to -13.4 inches (196 to -34 cm)
200 inches	671 to 1020 inches (1705 to 2590 cm)	128.4 to -22.4 inches (326 to -57 cm)
300 inches	1011 to 1534 inches (2569 to 3897 cm)	192.6 to -33.6 inches (489 to -85 cm)
500 inches	1692 to 2563 inches (4298 to 6511 cm)	320.9 to -55.9 inches (815 to -142 cm)

PowerLite Pro Z8000WUNL, 16:10 image, Long throw zoom lens (ELPLL07)

Screen or image size	Projection distance (1) (Wide to Tele)	Offset from lens center (2)
60 inches	290 to 410 inches (738 to 1043 cm)	38.5 to -6.7 inches (98 to -17 cm)
70 inches	341 to 481 inches (866 to 1222 cm)	44.9 to -7.8 inches (114 to -20 cm)
80 inches	391 to 551 inches (994 to 1401 cm)	51.4 to -9 inches (130 to -23 cm)
90 inches	442 to 622 inches (1122 to 1580 cm)	57.8 to -10.1 inches (147 to -26 cm)
100 inches	492 to 692 inches (1251 to 1759 cm)	64.2 to -11.2 inches (163 to -28 cm)
110 inches	543 to 763 inches (1379 to 1938 cm)	70.6 to -12.3 inches (179 to -31 cm)
120 inches	593 to 833 inches (1507 to 2117 cm)	77 to -13.4 inches (196 to -34 cm)
200 inches	997 to 1397 inches (2533 to 3549 cm)	128.4 to -22.4 inches (326 to -57 cm)
300 inches	1502 to 2102 inches (3816 to 5339 cm)	192.6 to -33.6 inches (489 to -85 cm)
500 inches	2512 to 3512 inches (6381 to 8920 cm)	320.9 to -55.9 inches (815 to -142 cm)

PowerLite Pro Z8050WNL, 16:10 image, Rear projection wide lens (ELPLR04)

Screen or image size	Projection distance (1)	Offset from lens center (2)
60 inches	37 inches (95 cm)	15.9 inches (40 cm)
70 inches	44 inches (112 cm)	18.5 inches (47 cm)
80 inches	51 inches (129 cm)	21.2 inches (54 cm)
90 inches	57 inches (146 cm)	23.8 inches (61 cm)

Screen or image size	Projection distance (1)	Offset from lens center (2)
100 inches	64 inches (162 cm)	26.5 inches (67 cm)
110 inches	71 inches (179 cm)	29.1 inches (74 cm)
120 inches	77 inches (196 cm)	31.8 inches (81 cm)
200 inches	130 inches (331 cm)	53 inches (135 cm)
300 inches	197 inches (500 cm)	79.5 inches (202 cm)
500 inches	330 inches (838 cm)	132.5 inches (337 cm)

PowerLite Pro Z8050WNL, 16:10 image, Wide zoom lens (ELPLW04)

Screen or image size	Projection distance (1) (Wide to Tele)	Offset from lens center (2)
60 inches	64 to 89 inches (163 to 225 cm)	38.2 to -6.4 inches (97 to -16 cm)
70 inches	75 to 104 inches (192 to 264 cm)	44.5 to -7.4 inches (113 to -19 cm)
80 inches	87 to 119 inches (220 to 302 cm)	50.9 to -8.5 inches (129 to -22 cm)
90 inches	98 to 134 inches (248 to 341 cm)	57.2 to -9.5 inches (145 to -24 cm)
100 inches	109 to 149 inches (277 to 380 cm)	63.6 to -10.6 inches (162 to -27 cm)
110 inches	120 to 165 inches (305 to 418 cm)	70 to -11.7 inches (178 to -30 cm)
120 inches	131 to 180 inches (334 to 457 cm)	76.3 to -12.7 inches (194 to -32 cm)
200 inches	221 to 302 inches (561 to 766 cm)	127.2 to -21.2 inches (323 to -54 cm)
300 inches	333 to 454 inches (846 to 1153 cm)	190.8 to -31.8 inches (485 to -81 cm)
500 inches	557 to 758 inches (1414 to 1926 cm)	318 to -53 inches (808 to -135 cm)

PowerLite Pro Z8050WNL, 16:10 image, Standard zoom lens (ELPLS04)

Screen or image size	Projection distance (1) (Wide to Tele)	Offset from lens center (2)
60 inches	86 to 140 inches (217 to 355 cm)	38.2 to -6.4 inches (97 to -16 cm)
70 inches	100 to 164 inches (255 to 416 cm)	44.5 to -7.4 inches (113 to -19 cm)
80 inches	115 to 188 inches (292 to 476 cm)	50.9 to -8.5 inches (129 to -22 cm)

Screen or image size	Projection distance (1) (Wide to Tele)	Offset from lens center (2)
90 inches	130 to 211 inches (330 to 537 cm)	57.2 to -9.5 inches (145 to -24 cm)
100 inches	145 to 235 inches (368 to 597 cm)	63.6 to -10.6 inches (162 to -27 cm)
110 inches	160 to 259 inches (405 to 658 cm)	70 to -11.7 inches (178 to -30 cm)
120 inches	174 to 283 inches (443 to 719 cm)	76.3 to -12.7 inches (194 to -32 cm)
200 inches	293 to 474 inches (743 to 1203 cm)	127.2 to -21.2 inches (323 to -54 cm)
300 inches	441 to 712 inches (1119 to 1808 cm)	190.8 to -31.8 inches (485 to -81 cm)
500 inches	736 to 1189 inches (1870 to 3019 cm)	318 to -53 inches (808 to -135 cm)

PowerLite Pro Z8050WNL, 16:10 image, Middle throw zoom lens 1 (ELPLM06)

Screen or image size	Projection distance (1) (Wide to Tele)	Offset from lens center (2)
60 inches	132 to 203 inches (335 to 515 cm)	38.2 to -6.4 inches (97 to -16 cm)
70 inches	155 to 237 inches (393 to 603 cm)	44.5 to -7.4 inches (113 to -19 cm)
80 inches	177 to 272 inches (451 to 691 cm)	50.9 to -8.5 inches (129 to -22 cm)
90 inches	200 to 307 inches (509 to 779 cm)	57.2 to -9.5 inches (145 to -24 cm)
100 inches	223 to 341 inches (567 to 867 cm)	63.6 to -10.6 inches (162 to -27 cm)
110 inches	246 to 376 inches (625 to 955 cm)	70 to -11.7 inches (178 to -30 cm)
120 inches	269 to 411 inches (683 to 1043 cm)	76.3 to -12.7 inches (194 to -32 cm)
200 inches	452 to 688 inches (1147 to 1747 cm)	127.2 to -21.2 inches (323 to -54 cm)
300 inches	680 to 1034 inches (1727 to 2627 cm)	190.8 to -31.8 inches (485 to -81 cm)
500 inches	1137 to 1727 inches (2887 to 4388 cm)	318 to -53 inches (808 to -135 cm)

PowerLite Pro Z8050WNL, 16:10 image, Middle throw zoom lens 2 (ELPLM07)

Screen or image size	Projection distance (1) (Wide to Tele)	Offset from lens center (2)
60 inches	192 to 295 inches (487 to 749 cm)	38.2 to -6.4 inches (97 to -16 cm)
70 inches	225 to 345 inches (572 to 877 cm)	44.5 to -7.4 inches (113 to -19 cm)

Screen or image size	Projection distance (1) (Wide to Tele)	Offset from lens center (2)
80 inches	259 to 396 inches (657 to 1006 cm)	50.9 to -8.5 inches (129 to -22 cm)
90 inches	292 to 447 inches (742 to 1135 cm)	57.2 to -9.5 inches (145 to -24 cm)
100 inches	326 to 497 inches (827 to 1263 cm)	63.6 to -10.6 inches (162 to -27 cm)
110 inches	359 to 548 inches (625 to 955 cm)	70 to -11.7 inches (178 to -30 cm)
120 inches	392 to 599 inches (997 to 1520 cm)	76.3 to -12.7 inches (194 to -32 cm)
200 inches	660 to 1004 inches (1677 to 2550 cm)	127.2 to -21.2 inches (323 to -54 cm)
300 inches	995 to 1510 inches (2528 to 3836 cm)	190.8 to -31.8 inches (485 to -81 cm)
500 inches	1665 to 2523 inches (4229 to 6409 cm)	318 to -53 inches (808 to -135 cm)

PowerLite Pro Z8050WNL, 16:10 image, Long throw zoom lens (ELPLL07)

Screen or image size	Projection distance (1) (Wide to Tele)	Offset from lens center (2)
60 inches	287 to 406 inches (729 to 1030 cm)	38.2 to -6.4 inches (97 to -16 cm)
70 inches	337 to 475 inches (855 to 1207 cm)	44.5 to -7.4 inches (113 to -19 cm)
80 inches	387 to 545 inches (982 to 1384 cm)	50.9 to -8.5 inches (129 to -22 cm)
90 inches	437 to 615 inches (1109 to 1561 cm)	57.2 to -9.5 inches (145 to -24 cm)
100 inches	486 to 684 inches (1236 to 1738 cm)	63.6 to -10.6 inches (162 to -27 cm)
110 inches	536 to 754 inches (1362 to 1915 cm)	70 to -11.7 inches (178 to -30 cm)
120 inches	586 to 824 inches (1489 to 2092 cm)	76.3 to -12.7 inches (194 to -32 cm)
200 inches	986 to 1381 inches (2503 to 3507 cm)	127.2 to -21.2 inches (323 to -54 cm)
300 inches	1485 to 2078 inches (3371 to 5277 cm)	190.8 to -31.8 inches (485 to -81 cm)
500 inches	2483 to 3471 inches (6307 to 8816 cm)	318 to -53 inches (808 to -135 cm)

Removing

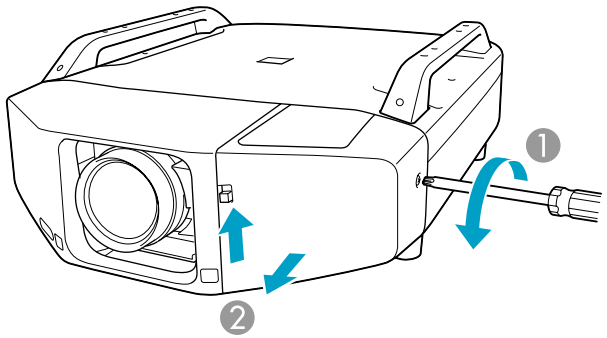

1 Loosen the screw.

2 While pulling up the interface cover open switch, pull the interface cover straight out.

Attaching

When you've finished connecting the projector to your equipment (☛ p.29) and plugging the power cord into the projector (☛ p.34), attach the interface cover as described below.

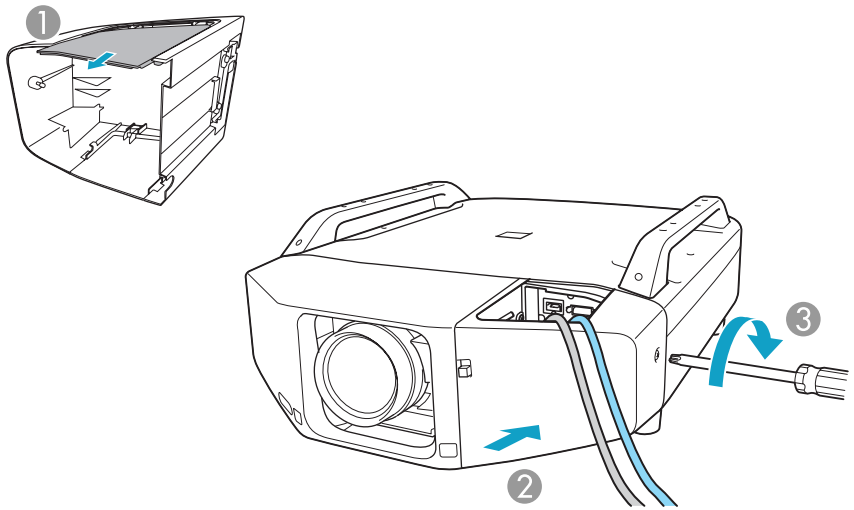

1 Remove the top of the interface cover.

2 Install the cover along the guide.

3 Tighten the screws.

Connecting the Projector to Your Equipment

The illustrations in this section show the PowerLite Pro Z8000WUNL. If you are using the PowerLite Pro Z8050WNL, the projector and interfaces are slightly different.

Connecting to a Computer

Connecting to the VGA Port

Procedure

1. **Connect one end of the VGA computer cable to the projector's Computer port, and the other end to your computer's monitor port.**

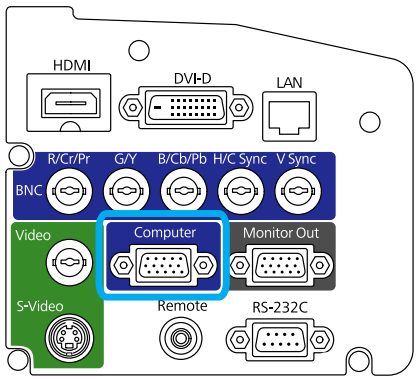

2. **Turn the projector on (☛ p.34), select the image source (☛ p.43), and adjust the image (☛ p.35).**

Make sure the Input Signal setting in the Signal menu is set to **Auto** or **RGB**. ☛ p.69

Connecting to the BNC Ports

Procedure

1. **Attach the BNC connectors on one end of your cable (not included) to the projector's BNC ports. Connect the other end of the cable to your computer.**

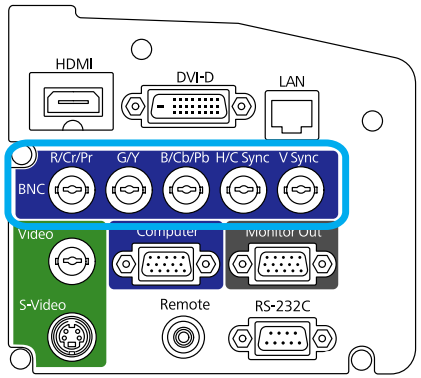

2. **Turn the projector on (☛ p.34), select the image source (☛ p.43), and adjust the image (☛ p.35).**

Make sure the Input Signal setting in the Signal menu is set to **Auto** or **RGB**. ☛ p.69

Connecting to the HDMI Port

Procedure

1. **Connect one end of your HDMI cable (not included) to the projector's HDMI port, and the other end to your computer's HDMI port.**

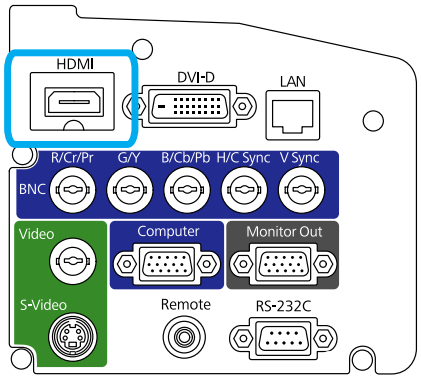

2. **Turn the projector on (☛ p.34), select the image source (☛ p.43), and adjust the image (☛ p.35).**

Connecting to the DVI-D Port

Procedure

1. **Connect one end of your DVI-D cable (not included) to the projector's DVI-D port, and the other end to your computer's DVI-D port.**

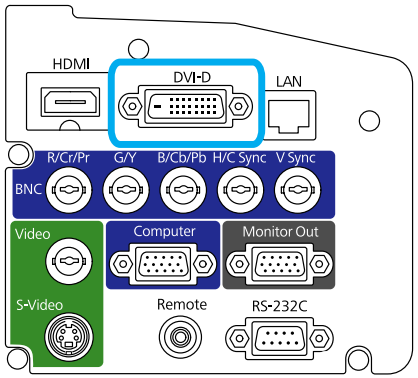

2. **Turn the projector on (☛ p.34), select the image source (☛ p.43), and adjust the image (☛ p.35).**

Connecting to Video Equipment

Connecting to the HDMI Port

Procedure

1. **Connect one end of your HDMI cable (not included) to the projector's HDMI port, and the other end to the HDMI connector on your equipment.**

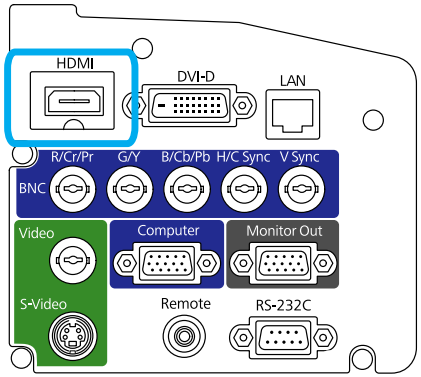

2. **Turn the projector on (☛ p.34), select the image source (☛ p.43), and adjust the image (☛ p.35).**

Connecting to the DVI-D Port

Procedure

1. **Connect one end of your DVI-D cable (not included) to the projector's DVI-D port, and the other end to the DVI-D connector on your equipment.**

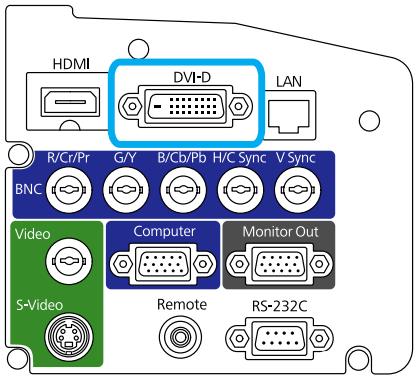

2. **Turn the projector on (☛ p.34), select the image source (☛ p.43), and adjust the image (☛ p.35).**

Connecting a Component Video Source

Procedure

1. **Connect one end of your cable (not included) to either the projector's BNC ports or Computer port (depending on the type of component video cable you're using). Connect the other end of the cable to your equipment.**

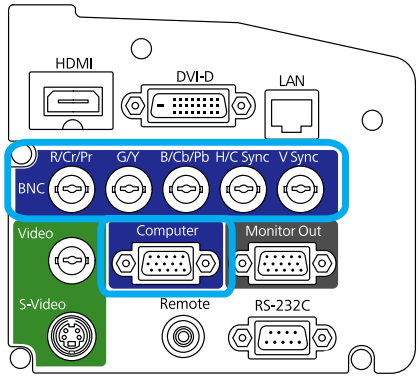

2. **Turn the projector on (☛ p.34), select the image source (☛ p.43), and adjust the image (☛ p.35).**

Make sure the Input Signal setting in the Signal menu is set to **Auto** or **Component Video**. ☛ p.69

Connecting an S-Video Source

Procedure

1. **Connect one end of your S-Video cable (not included) to the projector's S-Video port, and the other end to the S-Video connector on your equipment.**

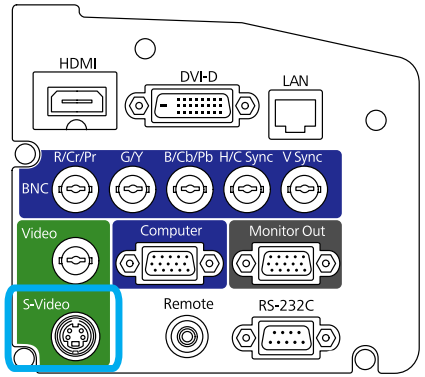

2. **Turn the projector on (☛ p.34), select the image source (☛ p.43), and adjust the image (☛ p.35).**

Connecting a Composite Video Source

Procedure

1. **Connect one end of your cable (not included) to the projector's Video port, and the other end to your equipment.**

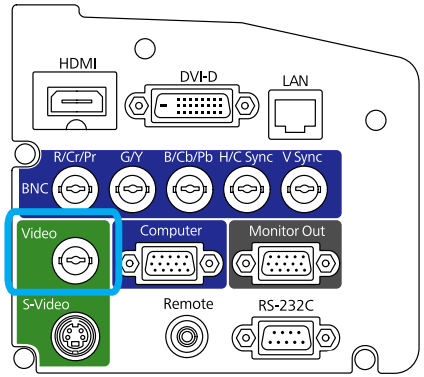

2. **Turn the projector on (☛ p.34), select the image source (☛ p.43), and adjust the image (☛ p.35).**

Turning the Projector On and Off

Turn off this product when not in use to prolong the life of the projector.

Procedure

1. **Plug one end of the power cord into the projector, and the other end into an electrical outlet.**

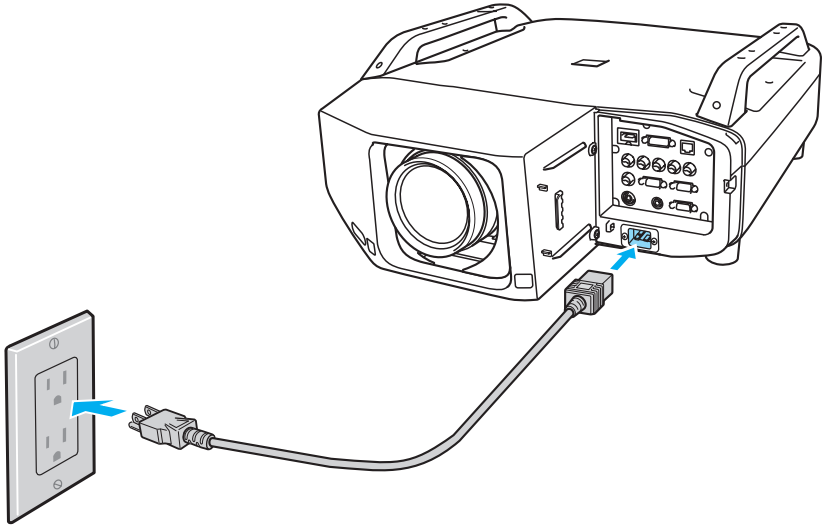

2. **Remove the lens cover.**

Warning:

When the lamp is on, never look into the lens or allow children or pets to look into the lens. This can damage your eyes, and is especially dangerous for children.

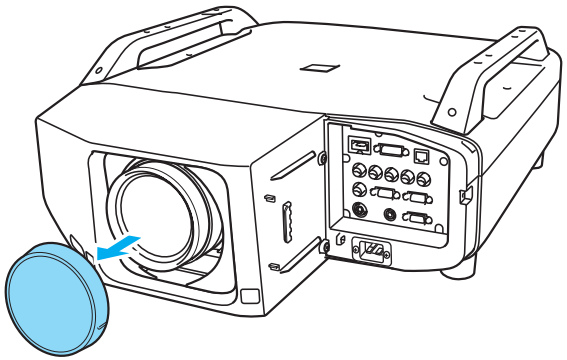

3. **Press the [⏻] power button on the remote control or on the back of the projector.**

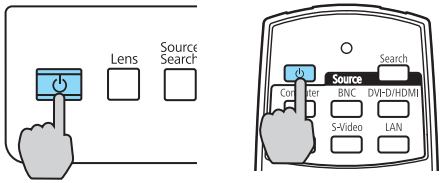

Adjusting the Position

Procedure

1. **Press the [Lens Shift] button on the remote control or press the [Lens] button on the back of the projector until "Adjust Lens Shift" is displayed on the screen.**

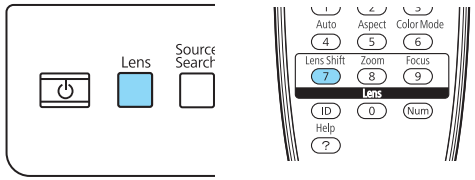

2. **To adjust the position, use the [⊙] button on the remote control or the arrow buttons on the back of the projector as shown below.**

   Press the button repeatedly to make fine adjustments. Press and hold the button to make larger adjustments.

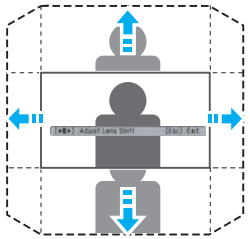

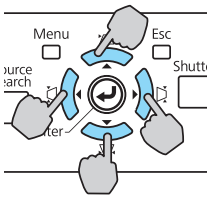

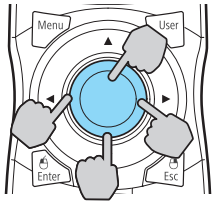

3. **When you're done, press the [Esc] button on the remote control or on the back of the projector.**

Focusing the Image

Procedure

1. **Press the [Focus] button on the remote control or press the [Lens] button on the back of the projector until "Adjust Focus" is displayed on the screen.**

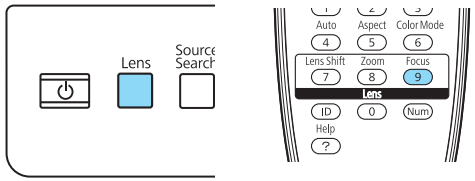

2. **To adjust the focus, use the [ ] button on the remote control or the arrow buttons on the back of the projector as shown below.**

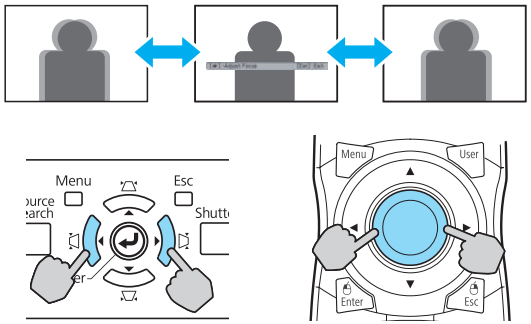

3. **When you're done, press the [Esc] button on the remote control or on the back of the projector.**

Zooming the Image

Procedure

1. **Press the [Zoom] button on the remote control or press the [Lens] button on the back of the projector until "Adjust Zoom" is displayed on the screen.**

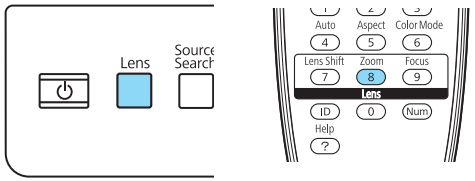

2. **To zoom, use the [ ] button on the remote control or the arrow buttons on the back of the projector as shown below.**

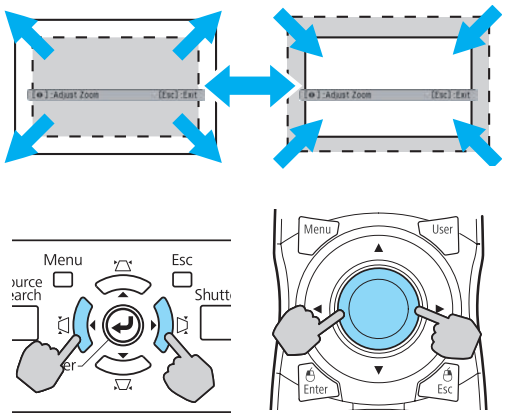

3. **When you're done, press the [Esc] button on the remote control or on the back of the projector.**

Fixing a Tilted Image

If you've placed your projector on a table in front of the screen and the image is tilted as shown below, you can use the four adjustable feet to correct the tilt.

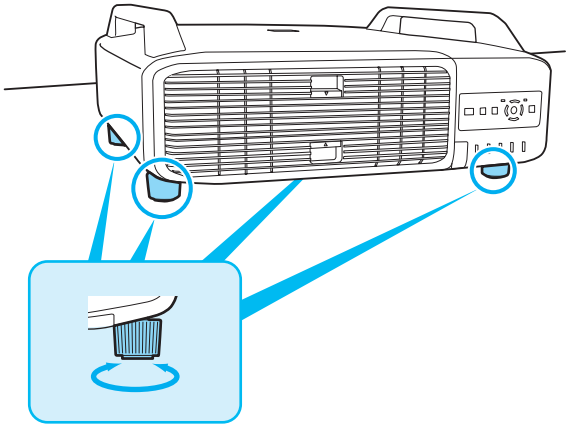

Useful Functions

This chapter explains useful tips for giving presentations, and the Security functions.

Correcting Distortion in the Projected Image

There are two ways to correct distortion in projected images.

- Quick Corner
  This allows you to manually correct each of the four corners of the projected image separately. ☛ p.40

  We recommend using Quick Corner to accurately adjust keystone distortion.

- H/V-Keystone
  This allows you to manually correct distortion in the horizontal and vertical directions independently. You can perform easy H/V-Keystone corrections by using the [⏢/▲] [⏢/▼] [⏢/◀] and [⏢/▶] buttons on the projector's control panel, as shown below.

  Before performing horizontal or vertical keystone, use the lens shift function to horizontally center the lens and vertically move the lens to the top or bottom. Otherwise, the distortion is not corrected accurately.

  The projected image may become smaller after you perform H/V-Keystone.

  The correction may not be properly performed for some zoom settings.

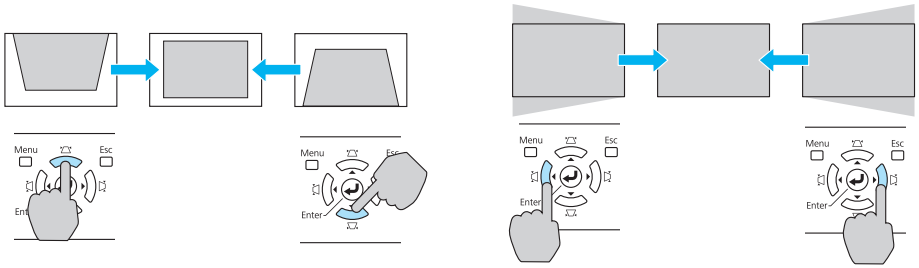

Quick Corner and H/V-Keystone cannot be performed at the same time. When the **Keystone** correction method is selected from the configuration menu, the correction method you choose is assigned to the [⏢/▲], [⏢/▼], [⏢/◀], and [⏢/▶] buttons on the control panel. The default setting for **Keystone** is set to **H/V-Keystone**, so when [⏢/▲], [⏢/▼], [⏢/◀], and [⏢/▶] buttons are pressed, H/V-Keystone correction is carried out.

Because Quick Corner and H/V-Keystone correction can be carried out while projecting a test pattern, you do not need to make preparations by connecting a computer or other equipment.

Correcting Distortion with Quick Corner

Procedure

1 Press the Menu button, and then from the configuration menu select Settings - Keystone.

Using the Remote Control

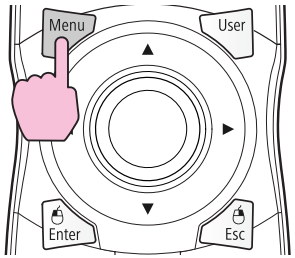

Using the Control panel

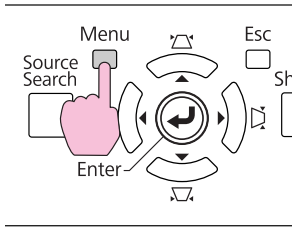

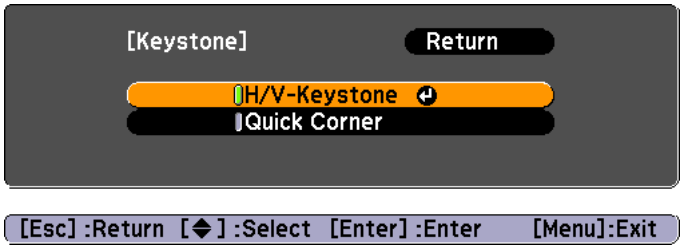

2 Select "Quick Corner", and then press the [Enter] button.

Press the [Enter] button again to display the selection screen from which you can select one of the four corners.

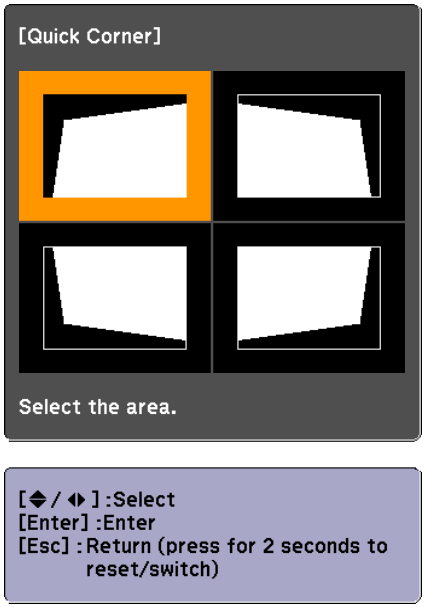

3 **Use the [⊙] button on the remote control or the [⏢/▲], [⏢/▼], [◁/◀], and [▷/▶] buttons on the control panel to select the corner you want to adjust, and then press the [Enter] button.**

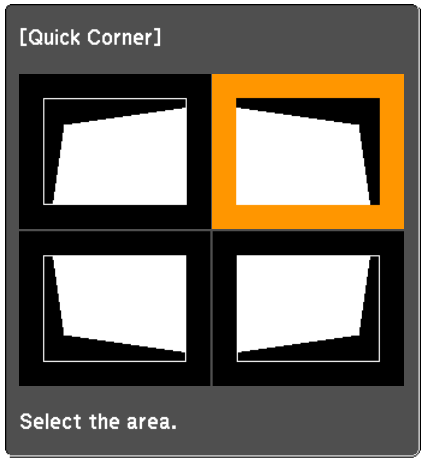

4 **To adjust the shape, use the [⊙] button on the remote control or the [⏢/▲], [⏢/▼], [◁/◀], and [▷/▶] buttons on the control panel. When you finish adjusting the corner, press [Esc] or [Enter].**

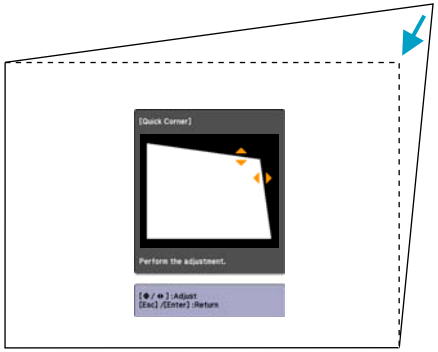

If the triangle in the direction you are adjusting the shape turns gray, as shown in the screen shot below, you cannot adjust the shape any further in that direction.

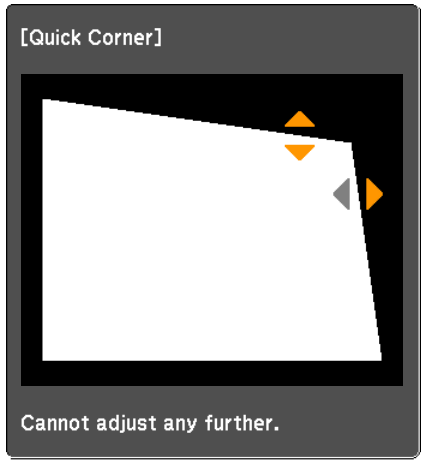

5 **Repeat steps 3 and 4 as needed to adjust any remaining corners.**

6 **When you are done, press the [Esc] button to exit the correction menu.**

Because the correction method was changed to **Quick Corner** from **Keystone** in the configuration menu, when [▲], [▼], [◀], and [▶] buttons are pressed later, the screen for selecting the corner in procedure 2 is displayed. Change **Keystone** from the configuration menu to **H/V-Keystone** if you want to correct H/V-Keystone when pressing the [▲], [▼], [◀], and [▶] buttons on the control panel.

If the Esc button is held down for about two seconds while correcting with Quick Corner, the following screen is displayed.

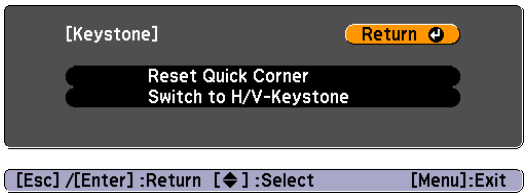

Reset Quick Corner: Resets the result of Quick Corner corrections.

Switch to H/V-Keystone: Switches the correction method to **H/V-Keystone**.

Changing the Projected Image

You can change the projected image in the following two ways.

- Changing by Source Search
  The projector automatically detects signals being input from connected equipment, and the image being input from the equipment is projected.
- Changing directly to the target image
  You can use the remote control buttons to change to the target input port.

Automatically Detect Input Signal and Change the Projected Image (Source Search)

You can project the target image quickly as input ports with no image signal being input are ignored when you change by pressing the Source Search button.

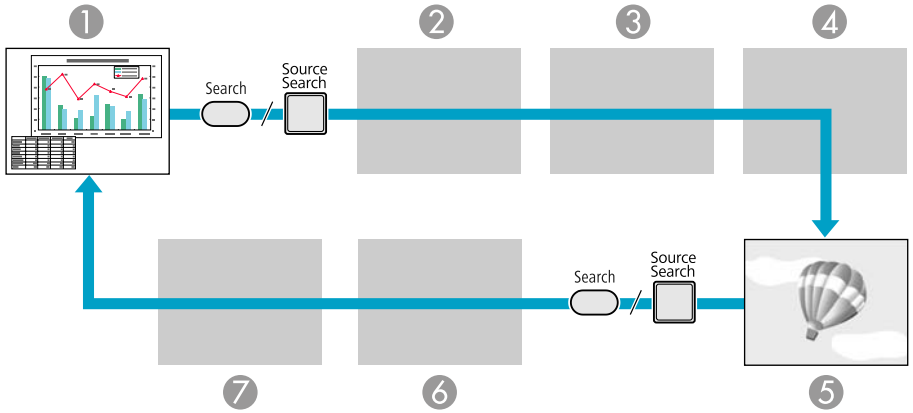

1 Computer
2 BNC
3 DVI-D
4 S-Video
5 Video
6 HDMI
7 LAN (PowerLite Pro Z8050WNL only): When using EasyMP Network Projection, the image from a computer connected to the projector via a network

Skipped when no image signal is being input.

Procedure

When your video equipment is connected, start playback before beginning this operation.

Using the Remote Control

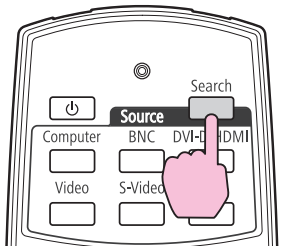

Using the Control panel

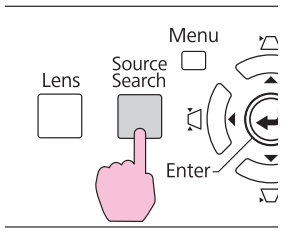

When two or more pieces of equipment are connected, press the [Source Search] button until the target image is projected.

The following screen showing the status of image signals is displayed when only the image that the projector is currently displaying is available, or when no image signal can be found. You can select the input port where the equipment you want to use is connected. If no operation is performed after about 10 seconds, the screen closes.

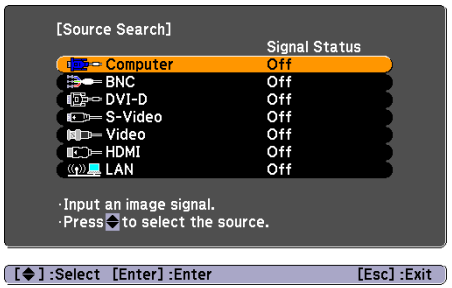

LAN is only displayed when you are using the PowerLite Pro Z8050WNL.

Switch to the target image using the Remote Control

You can change directly to the target image by pressing the following buttons on the Remote Control.

Remote Control

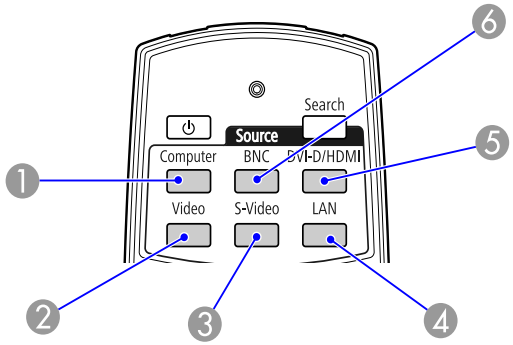

1 Changes to images from the Computer input port.
2 Changes to images from the Video input port.
3 Changes to images from the S-Video input port.
4 Changes to images from EasyMP Network Projection (PowerLite Pro Z8050WNL only). This button does not function when you are using the PowerLite Pro Z8000WUNL.
5 Each time the button is pressed, switches between images from the DVI-D and HDMI input ports.
6 Changes to images from the BNC input port.

Selecting the Projection Quality (Selecting Color Mode)

You can easily obtain the optimum image quality simply by selecting the setting that best corresponds to your surroundings when projecting. The brightness of the image varies depending on the mode selected.

Mode	Application
Dynamic	Ideal for use in a bright room. This is the brightest mode.
Presentation	Ideal for making presentations using color materials in a bright room.
Theatre*	Ideal for watching films in a dark room. Gives images a natural tone almost like an original source.
Photo	(When computer images (analog RGB/digital RGB) are input) Ideal for projecting still pictures, such as photos, in a bright room. The images are vivid and brought into contrast.
Sports	(When Component Video, S-Video, or composite video images are input) Ideal for watching TV programmes in a bright room. The images are vivid and brought to life.
sRGB*	Ideal for images that conform to the sRGB color standard.
Customized	Select Customized to adjust R,G,B,C,M,Y from Color Adjustment in the configuration menu.

* The Epson Cinema Filter deploys automatically when Theatre or sRGB is selected.

Procedure

Remote Control

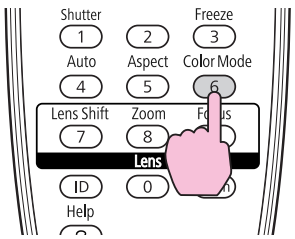

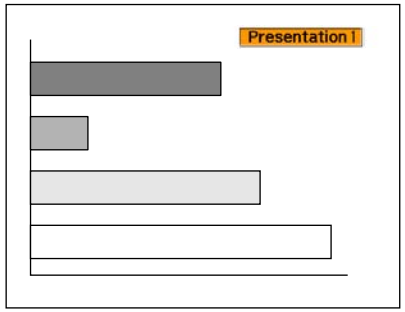

The Color Mode name is displayed on the screen by pressing the button.

If you press the button while the Color Mode name is displayed on the screen, it changes to the next Color Mode.

The color mode can also be set using **Color Mode** in the **Image** menu from the configuration menu.

Setting the Auto Iris

By automatically setting the luminance according to the brightness of the displayed image, it lets you enjoy deep and rich images.

Procedure

1. **Press the [Menu] button, and select Image - Auto Iris from the configuration menu.**

Using the Remote Control

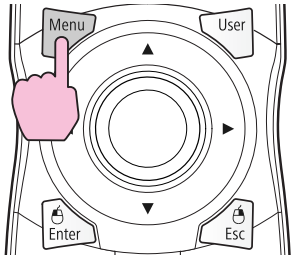

Using the Control panel

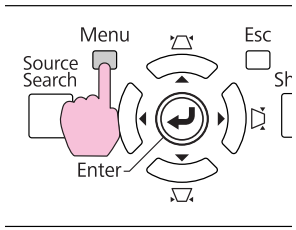

2. **Select On.**

The setting is stored for each Color Mode.

3. **Press the [Menu] button to close the configuration menu.**

Auto Iris can be set only when the **Color Mode** is **Dynamic**, **Theatre**, or **Customized**.

When **Multi-screen** is set to **On**, Auto Iris does not work.

Hiding the Image Temporarily (Shutter)

You can use this when you want to focus the audience's attention on what you are saying, or if you do not want to show details such as when you are changing between files during presentations from a computer.

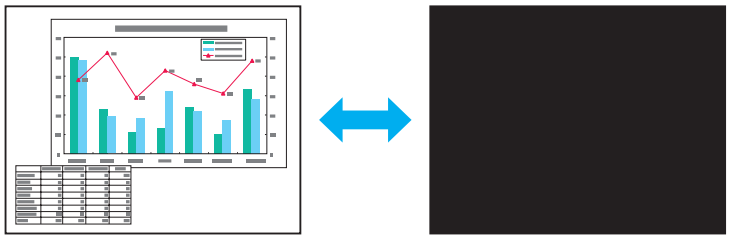

Procedure

Using the Remote Control

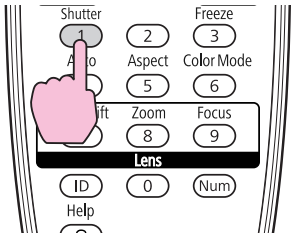

Using the Control panel

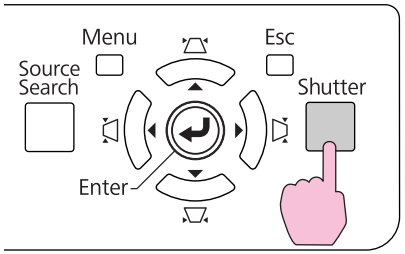

Each time you press the buttons, the electric shutter closes or opens.

When the shutter is closed and no operations are performed for about 120 minutes, the projector enters Sleep Mode and turns off automatically. If you do not want Sleep Mode to activate, change the **Shutter Timer** setting to **Off** from **Operation** in the **Extended** menu.

If you press [⏻] button while the shutter is closed, the shutter automatically opens and a message requesting confirmation to turn off the power is displayed on the screen.

Freezing the Image (Freeze)

When the moving image on the screen is frozen, the image continues to project like a still photo. Also, you can perform operations such as changing between files during presentations from a computer without projecting any images if the freeze function is activated beforehand.

Procedure

Remote Control

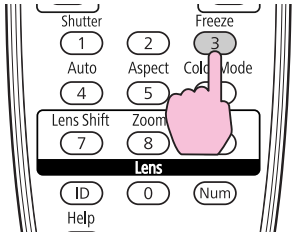

Each time you press the button, Freeze turns on or off.

The image source continues to play back the moving images even while Freeze is on, and so it is not possible to resume projection from the point where it was paused.

If the Freeze button is pressed while the configuration menu or a Help screen is displayed, the menu or Help screen being displayed is cleared.

Freeze still works while E-Zoom is being used.

Changing the Aspect Ratio

Change the Aspect Ratio when video equipment is connected so that images that have been recorded in digital video or onto DVDs can be viewed in 16:9 wide-screen format. Change the Aspect Ratio when projecting computer images at full size.

The changing methods and the types of Aspect ratio are as follows.

Changing methods

Procedure

Remote Control

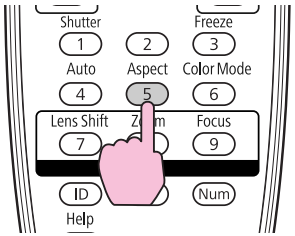

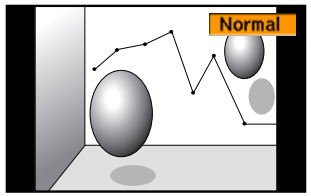

The Aspect name is displayed on the screen by pressing the button.

If you press the button while the Aspect name is displayed on the screen, it changes to the next Aspect Mode.

The aspect ratio can also be set using **Aspect** in the **Signal** menu from the configuration menu.

Changing the Aspect for video equipment images

Each time the button is pressed, the aspect changes in the order Normal, 16:9, Full, Zoom, and Native.

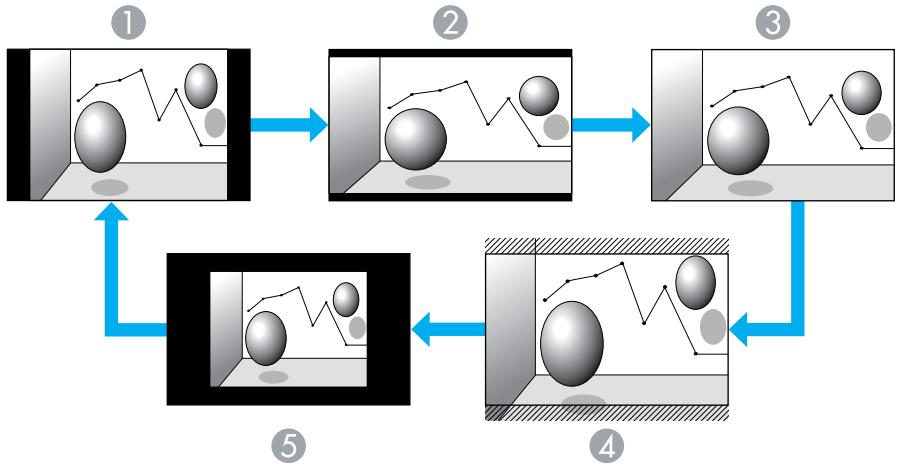

1 Normal
2 16:9
3 Full
4 Zoom
5 Native

Changing the Aspect for computer images

You can change the aspect of projected images input from the Computer, DVI-D, or HDMI input port as follows. The default aspect ratio is 16:10 because of the wide panel mounted on the projector. When projecting onto 16:9 screens, set the Aspect to 16:9.

If parts of the image are missing or the image is not projected properly, set **Wide** or **Normal** in **Resolution** from the configuration menu depending on the size of the computer screen.

Set Values	Operation	Projection example
Normal (When the input source is a Computer, DVI-D, or BNC)	Projects to the full projection size retaining the Aspect of the input image.	When a 1024x768 signal is input 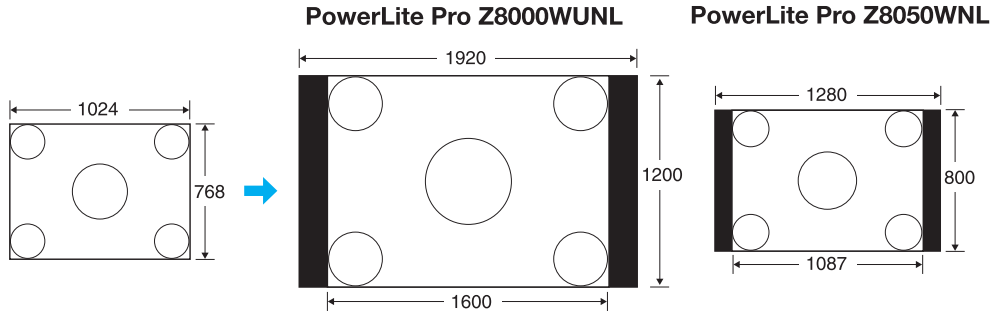
Auto (Only available when the input source is HDMI)	Projects in an appropriate aspect based on information from the signal being input.	
16:9	Projects to the full projection size at an Aspect of 16:9.	When a 1024x768 signal is input. 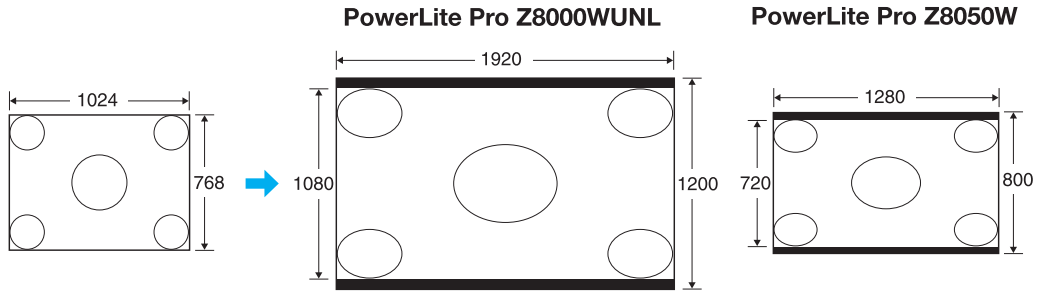

Set Values	Operation	Projection example
Full	Project at full size.	When a 1024x768 signal is input 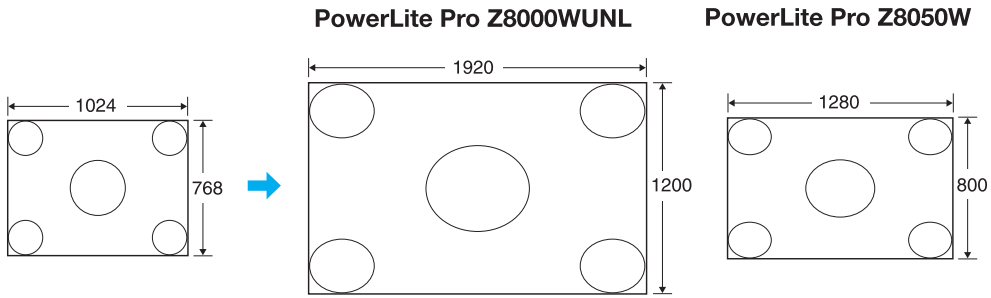
Zoom	Projects the input image enlarged to the full lateral direction size as the aspect ratio remains. Parts that extend beyond the projection size are not projected.	When a 1024x768 signal is input 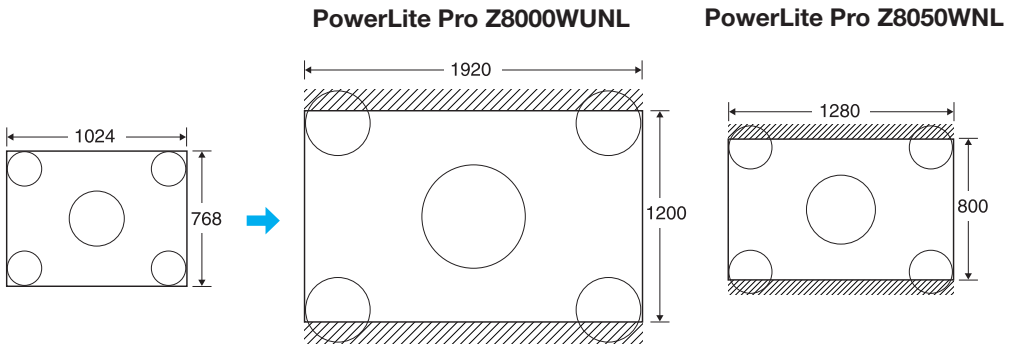

Set Values	Operation	Projection example	
Native	Projects at the resolution of the input image size to the center of the screen. This is ideal for projecting clear images. If the image resolution exceeds the panel resolution of your projector, the edges of the image are not projected.	When an 800x600 signal is input **PowerLite Pro Z8000WUNL** 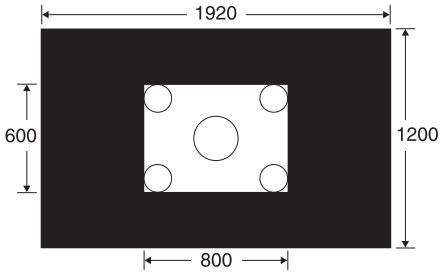 **PowerLite Pro Z8050WNL** 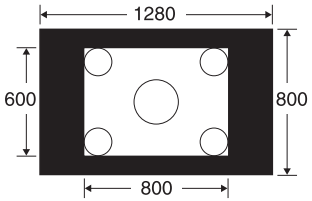 	When an 2048x1536 signal is input **PowerLite Pro Z8000WUNL** 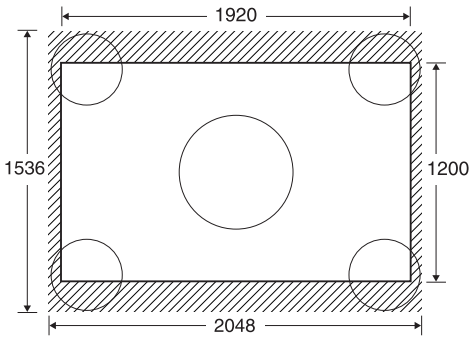 **PowerLite Pro Z8050WUNL** 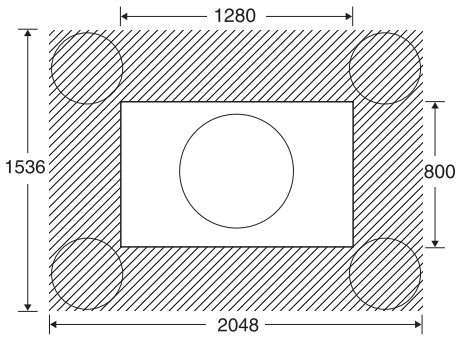

Pointer Function (Pointer)

This allows you to move a Pointer icon on the projected image, and helps you draw attention to the area you are talking about.

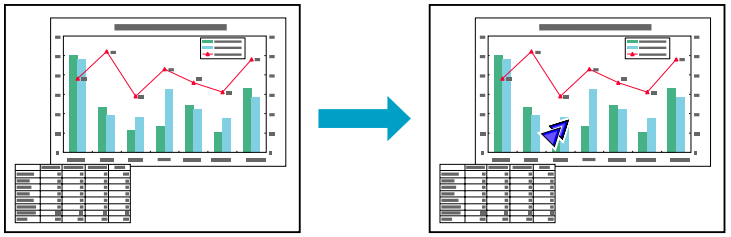

Procedure

1 Display the Pointer.

Remote Control

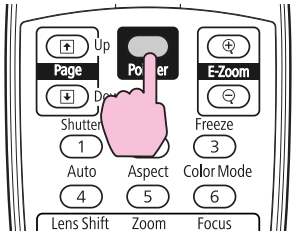

Each time you press the button, the pointer appears or disappears.

2 Move the Pointer icon ( ).

Remote Control

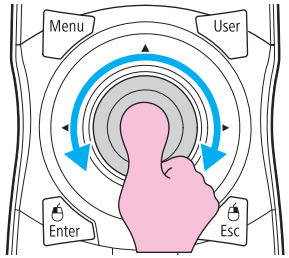

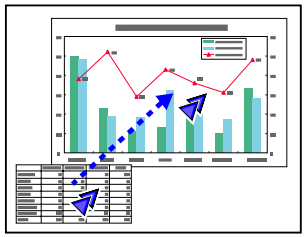

You can choose from three different kinds of Pointer icon (, , or) in **Settings** - **Pointer Shape** from the configuration menu.

Enlarging Part of the Image (E-Zoom)

This is useful when you want to expand images to see them in greater detail, such as graphs and tables.

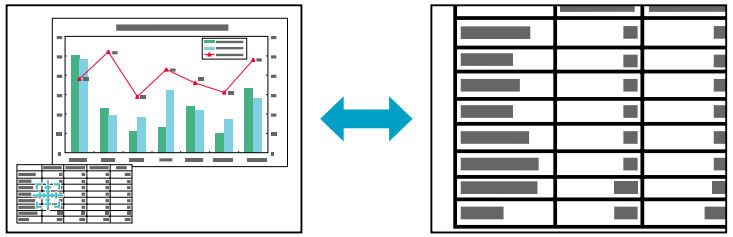

Procedure

1 Start E-Zoom.

Remote Control

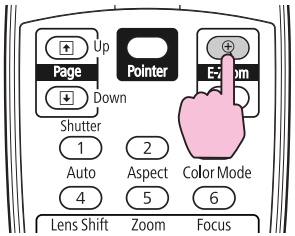

2 Move the ( ) to the area of the image that you want to enlarge.

Remote Control

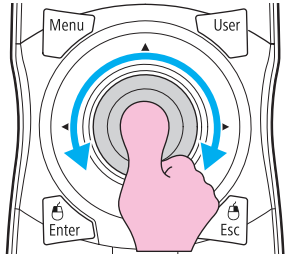

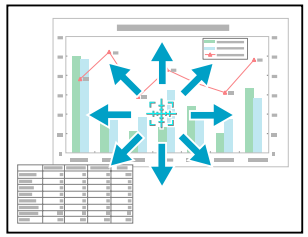

3 Enlarge.

Remote Control

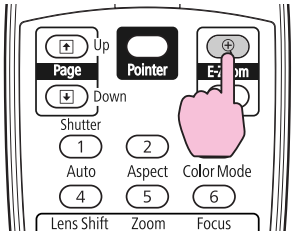

Each time the button is pressed, the area is expanded. You can expand quickly by holding the button down.

You can reduce the enlarged image by pressing the [⊖] button.

Press the [Esc] button to cancel.

The enlargement ratio appears on the screen. The selected area can be enlarged to between 1 to 4 times in 25 incremental steps.

Use the [⊙] button to scroll through the enlarged image.

If E-Zoom is selected, Progressive and Noise Reduction are cancelled.

E-Zoom is cancelled when you perform some functions, such as Keystone or Auto Setup.

Limitation of the Number of the Target Projectors when Using Multiple Projectors

When an ID is set for the projector and the remote control, you can use the remote control to operate only the projector with a matching ID. This is very useful when managing multiple projectors.

You can set an ID for the projector within a range of "1" to "9". The default value is Off.

You can set an ID for the remote control within a range of "0" to "9". The default value is "0". When the ID switch on the side of the remote control is set to Off, you can operate all projectors by the remote control regardless of the ID setting for the projector or the remote control.

The following table shows the possible combinations of projector ID and remote control ID.

Operation	Combinations		Descriptions
Possible	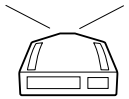	Projector ID: 1	When the control switch is set to On, and Projector ID matches the remote control ID, you can operate the projector with the remote control.
		ID switch: On Remote control ID: 1	
Possible	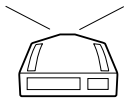	Projector ID: 1	When the ID switch on the side of the remote control is set to Off, you can operate the projector with the remote control regardless of the projector's ID setting.
		ID switch: Off Remote control ID: 3	

Operation	Combinations		Descriptions
Possible	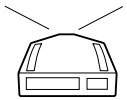	Projector ID: Off	When the Projector ID is Off, you can operate with the remote control regardless of the remote control ID setting.
		ID switch: On Remote control ID: 1	
Possible	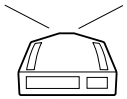	Projector ID: 1	When the remote control ID is "0", you can operate with the remote control regardless of the Projector ID setting.
		ID switch: On Remote control ID: 0	
Not possible	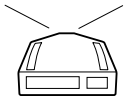	Projector ID: 1	When the remote control switch is On, and Projector ID and remote control ID do not match, you cannot operate with the remote control.
		ID switch: On Remote control ID: 3	

When **Remote Control Type** is set to **Simple** from **Operation** in the configuration menu, you cannot set the remote control ID.

Setting the Projector ID

Procedure

1. **During projection, press the Menu button and select Extended - "Projector ID" from the configuration menu.**

Using the Remote Control

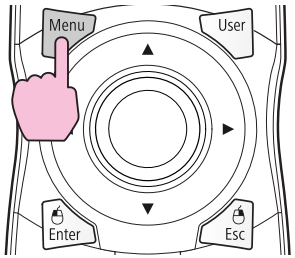

Using the Control panel

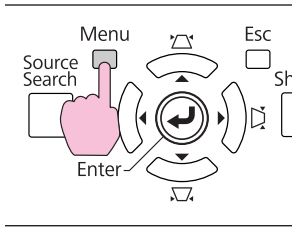

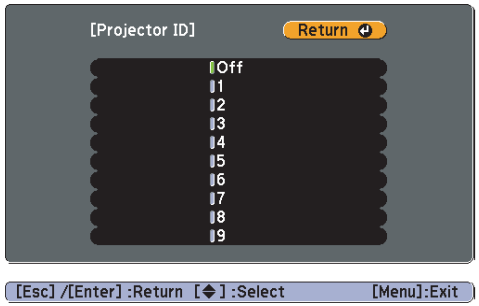

2. **Choose the ID you want to set and press the Enter button.**
3. **Press the [Menu] button to close the configuration menu.**

Checking the Projector ID

Use the following procedure to check the projector ID.

Procedure

1. **Set the remote control ID switch to On.**

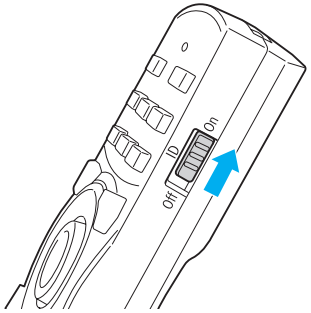

2. **During projection, while holding the [ID] button, press the [Help] button.**

Remote Control

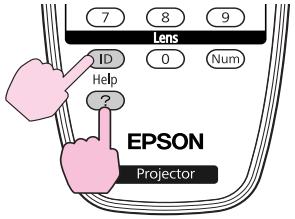

When you press the buttons, the current Projector ID is displayed on the projection screen. It disappears in about three seconds.

Setting the Remote Control ID

Procedure

1. **Set the remote control ID switch to On.**

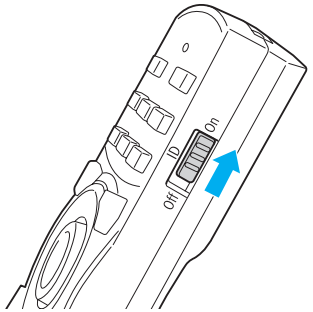

2. **While holding the [ID] button, press a number button to select a number to match the ID of the projector you want to operate.**

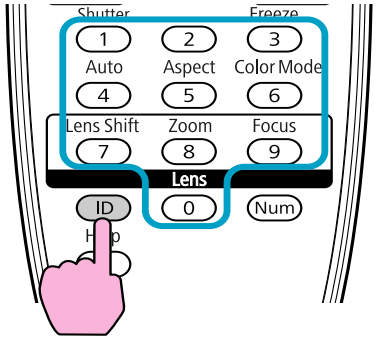

Once this setting has been made, the projector that can be operated by the remote control is limited.

The remote control ID setting is saved in the remote control. Even if the remote control batteries are removed to replace them, the stored ID setting is retained. However, if the batteries are left out for a long time, it is reset to the default value (ID0).

Correcting Color for Multiple Projectors (Multi-Screen Color Adjustment)

When multiple projectors are lined up and projecting images, you can manually correct the brightness and color tone of each projector's image so that the colors projected from each projector match closely.

Set each projector to the same Color Mode before using the multi-screen color adjustment function.

In some cases the brightness and color tone may not match completely even after correction.

Auto Iris does not work while this function is activated. Even if **Auto Iris** is set to **On**, and **Multi-screen** is set to **On**, Auto Iris does not work.

Summary of Correction Procedure

When multiple projectors are set up and you need to make corrections, use the following procedure to correct one projector at a time.

1. Set the projector ID and the remote control ID.

   To limit operation to one target projector, set a Projector ID for the target projector, and set the same ID for the remote control. ☛ p.55

2. Correct the color difference.

   You can carry out color correction when projecting from multiple projectors. You can adjust from black to white in five stages called levels 1 to 5, and in each of these 5 levels you can adjust the following two points.

   - Correcting brightness

     You can correct the image brightness to make them all equal.

   - Correcting color

     You can adjust the image color to make them match more closely by using Color Correct. (G/R) and Color Correct. (B/Y).

Correction Method

After setting up the projectors, correct the brightness and tone for each projector to reduce the differences.

Procedure

1. **Press the [Menu] button and select Extended - "Multi-screen" from the configuration menu.**

2. **Set "Multi-screen" to "On".**

3. **Select Lv. to be corrected in Adjustment Level.**

   - Each time a level is selected, the pattern of the level selected is displayed.
   - You can start correcting from any level, usually you can make it darker or lighter by correcting 1 to 5 or 5 to 1.

4. **Correct the brightness with Brightness Correct.**

   - When you select Lv. 5, all the images are adjusted to the darkest image from multiple projectors.
   - When you select Lv. 1, all the images are adjusted to the brightest image from multiple projectors.
   - When you select Lv. 2 to 4, all the images are adjusted to the mid-range brightness image from multiple projectors.
   - Because each time the [Enter] button is pressed the image displayed changes between the pattern display and the actual image, you can check the correction results and make corrections in the actual image.

5 **Correct the color using Color Correct. (G/R) and Color Correct. (B/Y).**

Because each time the [Enter] button is pressed the image displayed changes between the pattern display and the actual image, you can check the correction results and make corrections in the actual image.

6 **Repeat steps 3 to 5 until corrections are finished.**

7 **When all corrections are finished, press the Menu button to close the configuration menu.**

Security Functions

The projector has the following enhanced security functions.

- Password Protect
  You can limit who can use the projector.
- Control Panel Lock/Lens Operation Lock
  You can prevent people changing the settings on the projector without permission. ☛ p.62
- Theft Deterrent Lock
  The projector is equipped with various types of theft deterrent security devices. ☛ p.64

Managing Users (Password Protect)

When Password Protect is activated, people who do not know the Password cannot use the projector to project images even if the projector power is on. Furthermore, the user's logo that is displayed when you turn on the projector cannot be changed. This acts as an theft deterrent device as the projector cannot be used even if it is stolen. At the time of purchase, Password Protect is not activated.

Type of Password Protect

The following three kinds of Password Protect settings can be made according to how the projector is being used.

1. **Power On Protect**

   When **Power On Protect** is **On**, you need to enter a preset Password after the projector is plugged in and turned on (this also applies to Direct Power On). If the correct Password is not entered, projection does not start.

2. **User's Logo Protect**

   Even if someone tries to change the User's Logo set by the owner of the projector, it cannot be changed. When **User's Logo Protect** is set to **On**, the following setting changes for the User's Logo are prohibited.

   - Capturing a User's Logo
   - Settings for Display Background, and Startup Screen from Display in the configuration menu

3. **Network Protect**

   When **Network Protect** is set to **On** setting changes for **Network** Menu in the configuration menu are prohibited.

Setting Password Protect

Use the following procedure to set Password Protect.

Procedure

1 During projection, hold down the [Freeze] button for about five seconds.

The Password Protect setting menu is displayed.

Remote Control

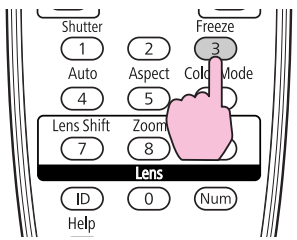

If Password Protect is already activated, you must enter the Password. If the Password is entered correctly, the Password Protect setting menu is displayed. ☛ "Entering the Password"

When the Password is set, stick the Password protect sticker in a visible position on the projector as a further theft deterrent.

2 Turn on Power On Protect.

(1) Select **Power On Protect**, and then press the [Enter] button.

(2) Select **On**, and then press the [Enter] button.

(3) Press the [Esc] button.

3 Turn on User's Logo Protect.

(1) Select **User's Logo Protect**, and then press the [Enter] button.

(2) Select **On**, and then press the [Enter] button.

(3) Press the [Esc] button.

4 Turn on Network Protect.

(1) Select **Network Protect**, and then press the [Enter] button.

(2) Select **On**, and then press the [Enter] button.

(3) Press the [Esc] button.

5 Set the Password.

(1) Select **Password**, and then press the [Enter] button.

(2) The message "Change the password?" is displayed, select **Yes** and then press the [Enter] button. The default setting for the Password is "0000". Change this to your own desired Password. If you select **No**, the screen shown in step 1 is displayed again.

(3) While holding down the [Num] button, enter a four digit number using the numeric buttons. The number entered is displayed as "* * * *". When you enter the fourth digit, the confirmation screen is displayed.

Remote Control

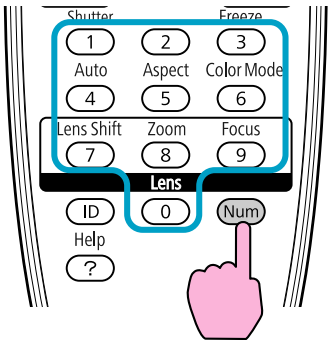

(4) Re-enter the Password.
The message "Password accepted." is displayed.

If you enter the Password incorrectly, a message is displayed prompting you to re-enter the password.

Entering the Password

When the Password entry screen is displayed, enter the Password using the numeric buttons on the Remote Control.

Procedure

While holding down the [Num] button, enter the Password by pressing the numeric buttons.

When you enter the correct Password, projection begins.

Caution:

- *If an incorrect Password is entered three times in succession, the message "**The projector's operation will be locked.**" is displayed for about five minutes, and then the projector switches to standby mode. If this happens, disconnect the power plug from the electrical outlet and then reinsert it and turn the projector's power back on. The projector displays the Password entry screen again so that you can enter the correct Password.*
- *If you have forgotten the password, make a note of the "Request Code: xxxxx" number that appears on the screen and contact Epson.* ☛ p.116
- *If you input the wrong Password thirty times in succession, the following message is displayed and the projector does not accept any more Password entries. **The projector's operation will be locked. Contact Epson.*** ☛ p.116

Restricting Button Operation

The following two kinds of operation restriction functions are available with the projector.

- Control Panel Lock

  This is useful at events or shows when you want to deactivate all buttons during projection or at schools when you want to limit button operation.

- Lens Operation Lock

  This function deactivates all buttons on the remote control related to the lens operation to prevent improper lens adjustment after it is properly adjusted.

Setting Control Panel Lock

Perform one of the following to lock the operation buttons on the Control panel. Even if the control panel is locked, you can still use the remote control as usual.

- Full Lock
  All of the buttons on the Control panel are locked. You cannot perform any operations from the Control panel, including turning the power on or off.
- Partial Lock
  All of the buttons on the Control panel, except for the [⏻] button, are locked.

Procedure

1 During projection, press the [Menu] button and select Settings - Control Panel Lock from the configuration menu.

Using the Remote Control

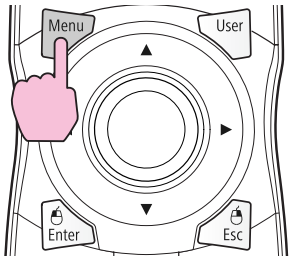

Using the Control panel

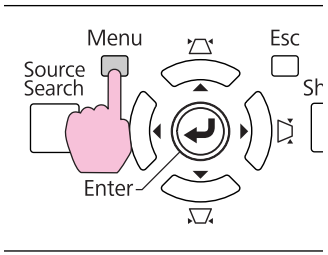

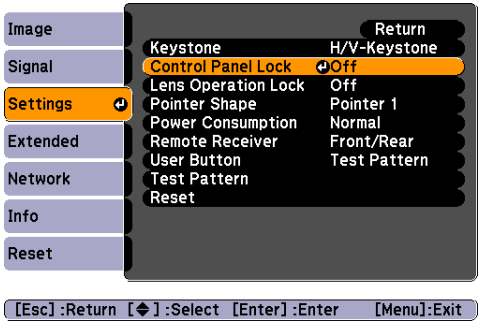

2 Select either Full Lock or Partial Lock according to your purpose.

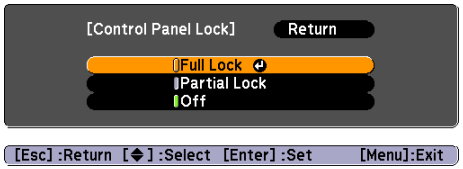

3 Select Yes when the confirmation message is displayed.

The Control panel buttons are locked according to the setting you chose.

You can release the Control panel lock by one of the following two methods.

- From the Remote Control, select **Off** in **Settings** - **Control Panel Lock** from the configuration menu.
- Press and hold down the [Enter] button on the Control panel for about seven seconds, a message is displayed and the lock is released.

Lens Operation Lock

This function locks the following buttons on the remote control related to the lens operation.

Remote Control

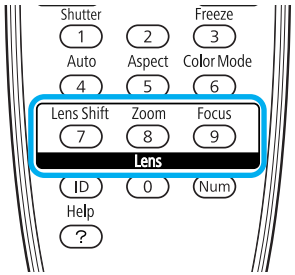

Procedure

1 Press the [Menu] button, and select Settings - "Lens Operation Lock" from the configuration menu.

Using the Remote Control

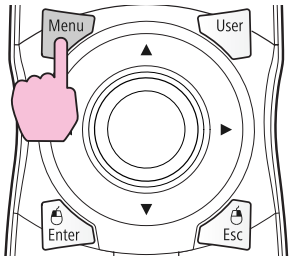

Using the Control panel

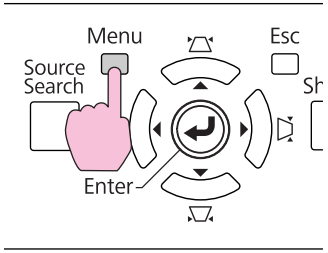

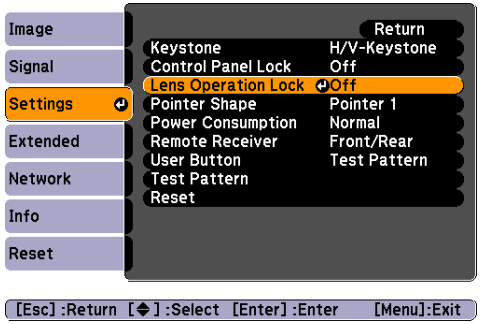

2 Select On.

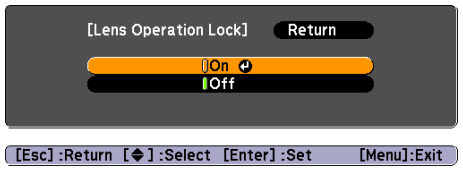

The buttons related to the lens operation are locked according to the setting you chose.

Theft Deterrent Lock

As the projector is often setup on ceiling mounts and left in rooms unattended, the projector includes the following security devices to prevent someone from taking the projector.

- Security slot
  The Security slot is compatible with the Microsaver Security System manufactured by Kensington.
- Handle
  A commercially available theft-prevention wire lock can be passed through the handle to secure the projector to a desk or pillar.

Installing the wire lock

Pass an theft deterrent wire lock through the handle.

See the documentation supplied with the wire lock for locking instructions.

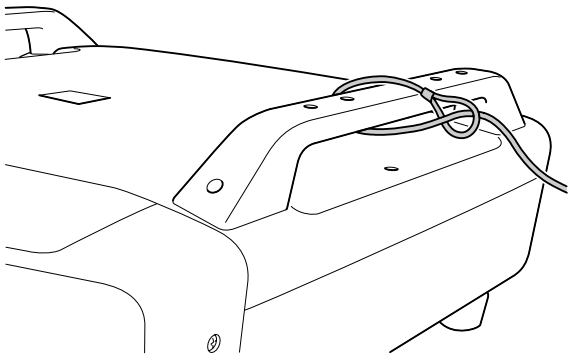

Configuration Menu

This chapter explains how to use the configuration menu and its functions.

See ☛ p.96 for a table that summarizes the options you can select based on the projector menu you are viewing. For more information on these menus and options, continue reading this chapter.

Using the Configuration Menu

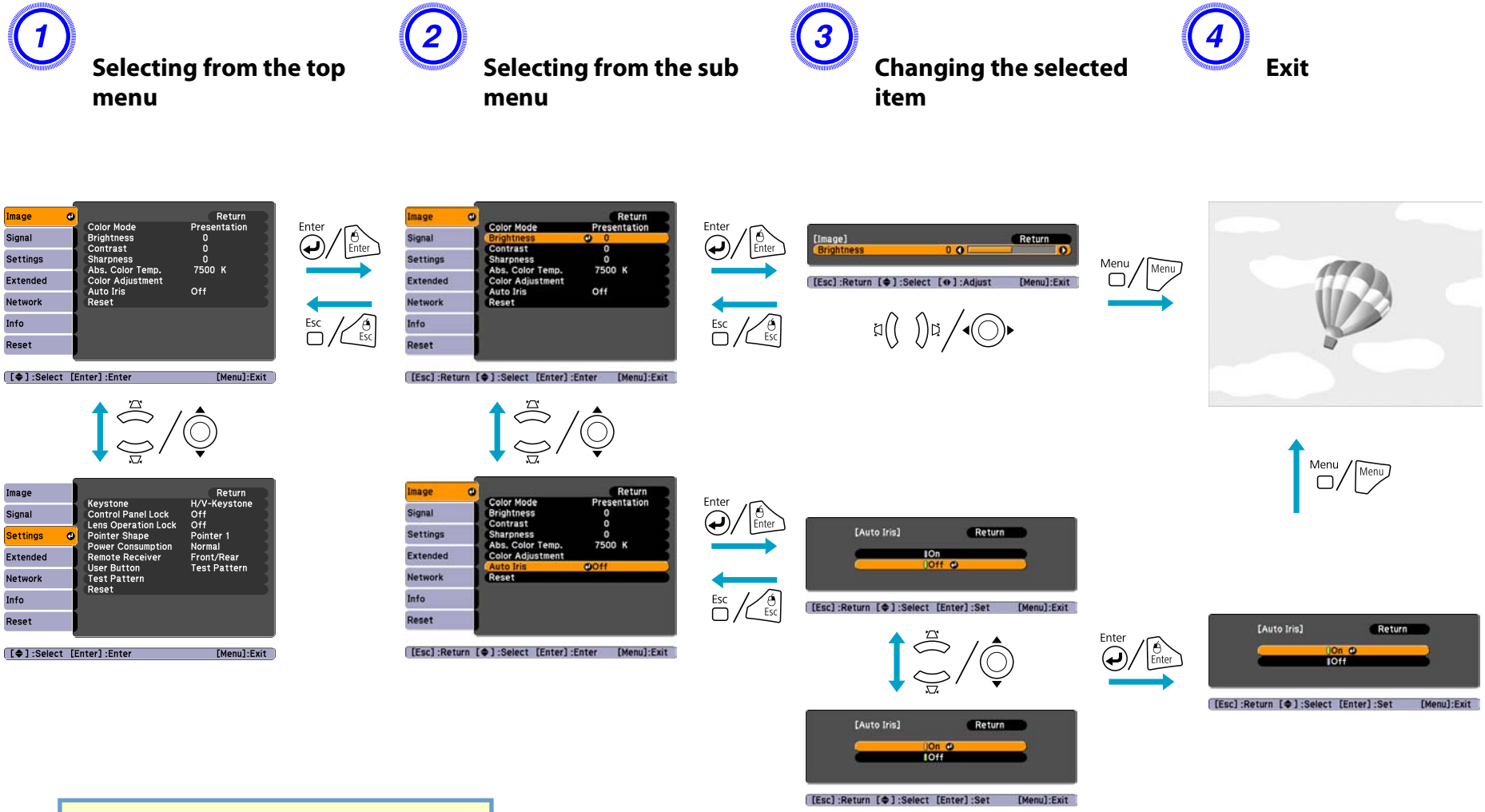

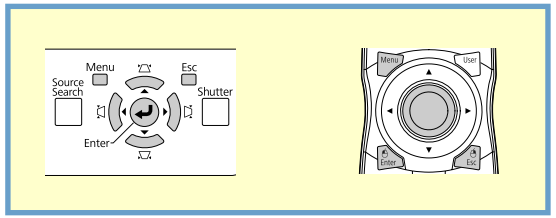

Image Menu

Items that can be set vary depending on the image signal currently being projected as shown in the following screen shots. Setting details are saved for each image signal.

Analog RGB/Digital RGB

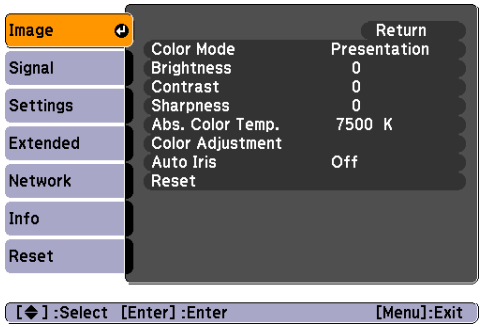

Analog/Digital Component Video/ Composite video/S-Video

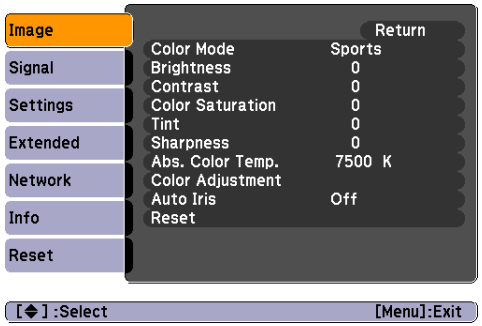

Sub Menu	Function
Color Mode	You can select the quality of the image to suit your surroundings. ☛ p.45
Brightness	You can adjust the image Brightness.
Contrast	You can adjust the difference between light and shade in the images.
Color Saturation	You can adjust the Color Saturation for the images.
Tint	(Setting is only possible when NTSC signals are being input if you use composite video/S-Video.) You can adjust the image Tint.
Sharpness	You can adjust the image sharpness.
Abs. Color Temp.	(This item cannot be selected if sRGB is selected as the **Color Mode** setting from the **Image** menu.) You can adjust the overall tint of the image. You can adjust tints in 10 stages from 5000 K to 10000 K. When a high value is selected the image becomes tinged with blue, when a low value is selected the image becomes tinged with red.

Sub Menu	Function
Color Adjustment	(This item cannot be selected if sRGB is selected as the **Color Mode** setting from the **Image** menu.) When you use any Color Mode other than Customized: **Red**, **Green**, **Blue**: You can adjust the saturation of each color individually. When **Customized** is selected as the **Color Mode**: **R**, **G**, **B**, **C**, **M**, **Y**: You can adjust the hue, saturation, and brightness of each color R (red), G (green), B (blue), C (cyan), M (magenta), Y (yellow) individually.
Auto Iris	(This setting is only possible when the **Color Mode** setting in the **Image** Menu is set to **Dynamic**, **Theatre**, or **Customized**, and **Multi-screen** is set to **Off**.) Set whether or not (**On**/**Off**) to adjust to the optimum light status for images being projected. ☛ p.46 The setting is stored for each Color Mode.
Reset	You can reset all adjustment values for the Image menu functions to their default settings. To return all menu items to their default settings, see ☛ p.95

Signal Menu

Items that can be set vary depending on the image signal currently being projected as shown in the following screen shots. Setting details are saved for each image signal.

Analog RGB

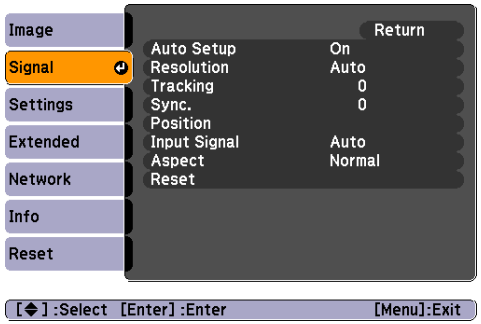

Digital RGB/ Digital Component Video

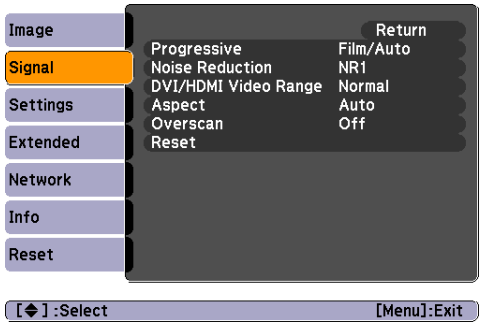

Analog Component Video

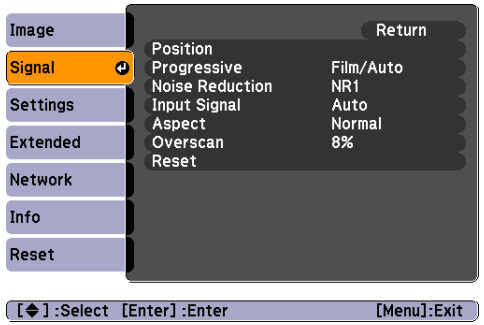

Composite video/S-Video

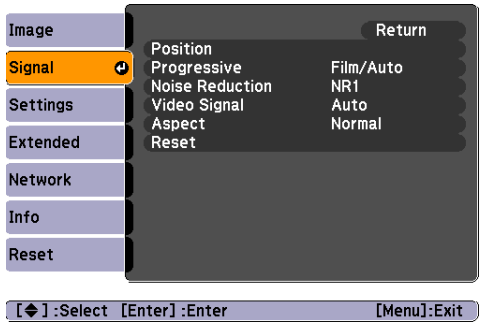

Sub Menu	Function
Auto Setup	You can select whether or not (**On**/**Off**) Auto Setup automatically adjusts the image to the optimum state when the Input Signal changes. Auto Setup is not available when **Resolution** is set to **Customized 1** or **Customized 2**.
Resolution	**Auto**: The resolution of the input signal is automatically identified. **Wide**, **Normal**: If the images cannot be projected correctly when **Auto** is set, set this menu. Set to **Wide** depending on the connected computer for wide screens, or set to **Normal** for 4:3 or 5:4 screens. **Manual**: You can specify the resolution. This is ideal when connected computer is fixed,
Tracking	You can adjust computer images when vertical stripes appear in the images.
Sync.	You can adjust computer images when flickering, fuzziness, or interference appear in the images.
Position	You can adjust the display Position up, down, left, and right when a part of the image is missing so that the whole image is projected.

Sub Menu	Function
Progressive	(Component Video can only be adjusted when 480i/576i/1080i signals are being input. This cannot be set when a digital RGB signal is input.) **Off**: IP conversion is carried out for each field in the screen. This is ideal for viewing images with a large amount of movement. **Video**: This is ideal for viewing general video images. **Film/Auto**: By automatically converting movie films, CG, animated images, and so on recorded in 24/30 frames to the optimum progressive signal via 2-3 pull-down, it is possible to recreate the natural feel of the original image.
Noise Reduction	(This cannot be set when a digital RGB signal is input.) Smoothes out rough images. There are two modes. Select your favorite setting. It is recommended that this is set to **Off** when viewing image sources in which noise is very low, such as for DVDs.
DVI/HDMI Video Range	(This cannot be set when a digital RGB signal is input.) When the projector's DVI-D input port or HDMI input port is connected to a DVD player, the projector's video range is set according to the DVD player's video range setting.
Input Signal	You can select an input signal from Computer input port or BNC input port. If **Auto** is set, the input signal is identified automatically according to the connected equipment. If colors do not appear correctly when this is set to **Auto**, select the appropriate signal according to the connected equipment.
Video Signal	You can select input signal from Video input port. If set to **Auto**, video signals are recognized automatically. If interference appears in the image or a problem occurs such as no image is being projected when set to **Auto**, select the appropriate signal according to the connected equipment.
Aspect	You can set the Aspect Ratio for projected images. ☛ p.47
Overscan	(This cannot be set when a digital RGB signal is input.) You can change the Output Scaling (the range of projected image). The range of trimming can be set to **Off**, **4%** or **8%**. You can select **Auto** only when the input source is HDMI. When **Auto** is selected, the range is automatically switched to Off or 8% according to the input signal. However, the automatic setting is only effective when the video equipment is connected via the projector's HDMI port.
Reset	You can reset all adjustment values on the Signal menu to their default settings, except for Input Signal. To return all menu items to their default settings, see ☛ p.95

Settings Menu

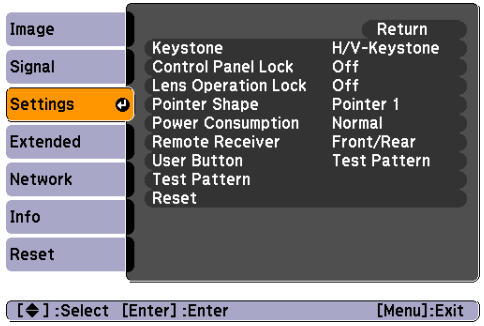

Sub Menu	Function
Keystone	You can correct keystone distortion. **H/V-Keystone**: Corrects horizontal and vertical keystone distortion. Select one of **V-Keystone** or **H-Keystone**. Use the [/▲], [/▼], [/◀], and [/▶] buttons on the control panel to perform similar corrections to **V-Keystone** and **H-Keystone**. **Quick Corner**: Selects and corrects the four corners of the projected image. ☛ p.40
Control Panel Lock	You can use this to restrict operation of the projector's Control panel. ☛ p.62
Lens Operation Lock	You can use this to restrict the lens operation of the remote control. ☛ p.63
Pointer Shape	You can select the shape of the pointer. ☛ p.52 **Pointer 1**: **Pointer 2**: **Pointer 3**:
Power Consumption	You can set the Lamp brightness to one of two settings: **Normal** or **ECO**. Select **ECO** if the images being projected are too bright such as when projecting images in a dark room or onto a small screen. When ECO is selected, the amount of electricity consumed and the lamp's operating life are changed as follows, and the fan rotation noise during projection is reduced. Electrical consumption: about 16% decrease, lamp life: about 1.4 times longer
Remote Receiver	You can limit the reception of the operation signal from the Remote Control. When you want to prohibit operation by Remote Control, or if the Remote Receiver has a fluorescent light too close to it, you can make settings to deactivate the remote receiver you do not want to use or that is experiencing interference.

Sub Menu	Function
User Button	You can assign selected items from the configuration menu to the Remote Control's [User] button. By pressing the [User] button, the assigned menu item selection/adjustment screen is displayed, allowing you to make one-touch settings/adjustments. You can assign one of the following six items to the [User] button. Power Consumption, Info, Progressive, Test Pattern, Multi-screen, and Resolution
Test Pattern	When the projector is setup, a Test Pattern is displayed so that you can adjust the projection without connecting other equipment. While the Test Pattern is displayed, zoom, focus adjustments, and Keystone correction can be performed. To cancel the Test Pattern, press the [Esc] button on the Remote Control or the Control panel.
Reset	You can reset all adjustment values on the Settings menu to their default settings, except for User Button. To return all menu items to their default settings, see ☛ p.95

Extended Menu

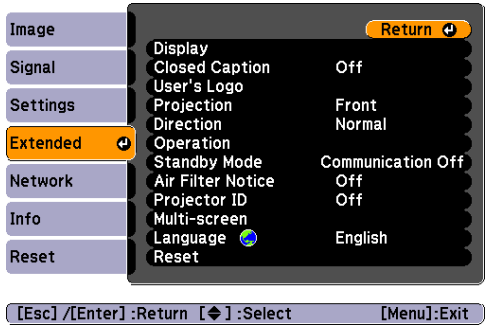

Sub Menu	Function
Display	You can make settings related to the projector's display. **Messages**: The following messages are not displayed on the screen when this item is set to **Off**. Overheating and other warnings, messages such as when there is no video input, and when Freeze is On or when changing Source, Color Mode or Aspect. **Display Background**[*1]: You can set the screen status for when no image signal is available to **Black**, **Blue**, or **Logo**. **Startup Screen**[*1]: You can set whether or not (**On**/**Off**) the Startup Screen (the registered User's Logo displays when starting the projector) is displayed. **Menu Size** (PowerLite Pro Z8000WUNL only): You can select **Normal** or **Larger** for the display size of the configuration menu, Help, and other messages.
Closed Caption	You can select **CC1**, **CC2**, or **Off**.
User's Logo[*1]	You can change the User's Logo that is displayed as a background during Display Background or Startup Screen.
Projection	You can select from the following according to the way the projector is installed. **Front**, **Front/Upside Down**, **Rear**, **Rear/Upside Down**
Direction	You can select from the following according to the way the projector is installed. **Normal**, **Pointing Up**, **Pointing Down**

Sub Menu	Function
Operation	**Direct Power On**: You can set whether or not (**On**/**Off**) to enable Direct Power On. Be careful when this item is set to **On** because this unit turns on at the time of power recovery with this unit plugged-in to an outlet. **Sleep Mode**: When set to **On**, this automatically stops projection when no image signal is being input and no operations are carried out. **Sleep Mode Timer**: When **Sleep Mode** is set to **On**, you can set the time before the projector automatically turns off within a range of 1 to 30 minutes. **Shutter Timer**: When set to **On**, this turns off the power automatically 120 minutes after the electric shutter is closed. **Shutter Timer** is set to **On** at the time of purchase. (When Shutter Time and Sleep Mode are set to On at the same time, Sleep Mode has priority.) **High Altitude Mode**: Set to **On** when using the projector above an altitude of 4900 ft (1500 m). **BNC Sync Termination**: Set the termination for the signal from the BNC input port. This should usually be set to Off. Set to **On** when analog (75Ω) termination such as for switchers is necessary. **Remote Control Type**: You can select **Normal** or **Simple** depending on the type of remote control. Set this item to **Normal** to use the remote control provided with the projector. When **Simple** is selected, you can use the remote control provided with other Epson projectors to operate this projector. This is useful if you want to use a remote control that you are already familiar with to operate the projector. However, you cannot use the remote control provided with the projector if this is set to **Simple**. Make sure you want to change this setting to Simple because, if the projector is mounted on the ceiling or somewhere hard to reach, changing it back may be difficult.
Standby Mode	You can use the functions that monitor and control the status of the projector over the network even when the projector is in standby mode if this is set to **Communication On**. You can use SNMP to monitor and control the status of the projector over the network, or by using the EasyMP Monitor software supplied with this product.
Air Filter Notice	You can set whether or not (**On**/**Off**) to enable the Air Filter Notice. When this is set to **On** and a clog in the air filter is detected, the message is displayed on the screen.
Projector ID	Set the ID within a range of 1 to 9. Off indicates that no ID is set. ☛ p.56

Sub Menu	Function
Multi-screen	When this is set to On, you can adjust the hue and brightness of images projected from a row of the several projectors.☛ p.58 **Adjustment Level**: You can adjust from black to white in five stages called Level 1 to 5, and in each of these 5 levels you can adjust Brightness Correct. and Color Correct. **Brightness Correct.**: Corrects the difference in the brightness of each projector. **Color Correct. (G/R)** / **Color Correct. (B/Y)**: You can correct the difference in the color of each projector. When **Multi-screen** is set to **On**, **Auto Iris** does not work.
Language	You can set the Language for message displays.
Reset	You can reset Display*1, Operation*2, and Air Filter Notice from the Extended menu to their default settings. To return all menu items to their default settings, see ☛ p.95

*1 When **User's Logo Protect** is set to **On** in Password Protect, settings relating to User's Logo cannot be changed. You can make changes after setting **User's Logo Protect** to **Off**. ☛ p.60

*2 Except for High Altitude Mode and Remote Control Type.

Network Menu (PowerLite Pro Z8000WUNL)

For information on the PowerLite Pro Z8050WNL Network menu, see ☛ p.78.

When **Network Protect** is set to **On** in **Password Protect**, a message is displayed and the settings cannot be changed. You can make changes after setting **Network Protect** to **Off**. ☛ p.60

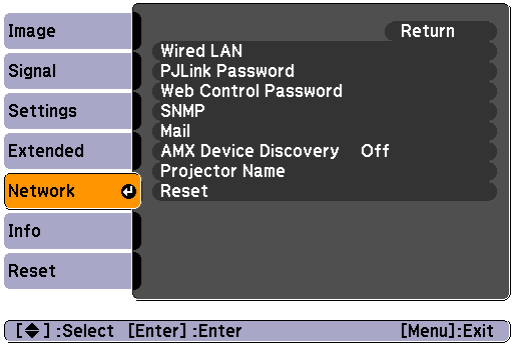

Sub Menu	Function
Wired LAN	You can make network settings. **DHCP**: You can set whether or not (On/Off) to use DHCP. If this is set to **On** you cannot set any more addresses. **IP Address**: You can input the IP address assigned to the projector.* You can enter a number from 0 to 255 in each field of the address. However, the following IP Addresses cannot be used. 0.0.0.0, 0.x.x.x, 127.x.x.x, 224.0.0.0 to 255.255.255.255 (where x is a number from 0 to 255) **Subnet Mask**: You can input the subnet mask for the projector.* You can enter a number from 0 to 255 in each field of the address. However, the following Subnet Masks cannot be used. 0.0.0.0, 255.255.255.255 **Gateway Address**: You can input the IP address for the gateway for the projector.* You can enter a number from 0 to 255 in each field of the address. However, the following Gateway Addresses cannot be used. 0.0.0.0, 127.x.x.x, 224.0.0.0 to 255.255.255.255 (where x is a number from 0 to 255) **MAC Address**: You can display the MAC address for the projector.
PJLink Password	Set a Password to use when you access the projector using compatible PJLink software.* You can enter up to 32 single-byte alphanumeric characters.

Sub Menu	Function
Web Control Password	Set a password to use when making settings and controlling the projector using Web Control.* You can enter up to 8 single-byte alphanumeric characters. Web control is a function that allows you to set up and control the projector using your computer's web browser. For more information, see the *EasyMP Monitor Operation Guide*.
SNMP	You can make SNMP settings. **Trap IP Address 1**/**Trap IP Address 2**: You can register up to two addresses as the SNMP trap notification destination.* To use SNMP to monitor the projector, you need to install an SNMP manager program on your computer. SNMP should be managed by a network expert.
Mail	When this is set, you receive an e-mail notification if a problem or warning occurs in the projector. For information on the contents of the sent email. **Mail Notification**: You can set whether or not (On/Off) to be notified by e-mail. If this is set to **Off** you cannot set any more addresses. **SMTP Server**: You can input the IP address for the SMTP server for the projector.* You can enter a number from 0 to 255 in each field of the address. However, the following IP Addresses cannot be used. 127.x.x.x, 224.0.0.0 to 255.255.255.255 (where x is a number from 0 to 255) **Port Number**: You can display the SMTP server's port number. The default value is 25. When editing settings from Web Control, you can change Port Number by entering a valid number from 1 to 65535. **Address 1 Setting**/**Address 2 Setting**/**Address 3 Setting**: You can enter the e-mail address* and the contents of the message to receive notification when a problem or warning occurs. You can register up to three destinations. You can enter up to 64 single-byte alphanumeric characters for the e-mail addresses.
AMX Device Discovery	When the projector is connected to a network, set this to **On** to allow the projector to be detected by AMX Device Discovery. Set this to **Off** if the projector is not connected to an environment controlled with a controller from AMX or AMX Device Discovery.
Projector Name	Displays the projector name used to identify the projector when connected to a network.
Reset	You can reset all adjustment values for the Network menu to their default settings. To return all menu items to their default settings, see ☛ p.95

* When inputting numbers and passwords, the following software keyboards are displayed. Use the [⊕] button on the remote control to move the cursor to the target key, and then press the [Enter] button. Enter figures by holding down the [Num] button on the Remote Control and pressing the numeric buttons. After inputting, select **Finish** on the keyboard to confirm your input. Select **Cancel** on the keyboard to cancel your input.

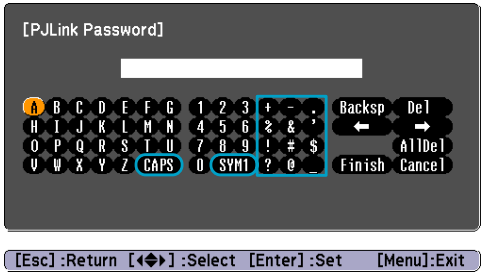

Each time the CAPS key is selected, it sets and changes between upper case and lower case letters. Each time the SYM1/2 key is selected, it sets and changes the symbol keys for the section enclosed by the frame.

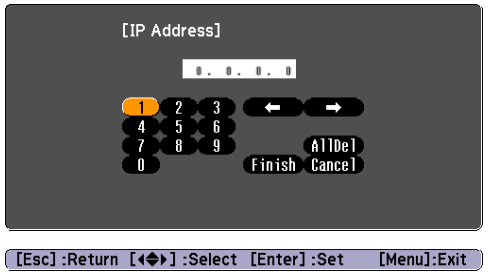

Network Menu (PowerLite Pro Z8050WNL)

For information on the PowerLite Pro Z8000WUNL Network menu, see ☛ p.75.

When **Network Protect** is set to **On** in **Password Protect**, a message is displayed and the settings cannot be changed. You can make changes after setting **Network Protect** to **Off**. ☛ p.60

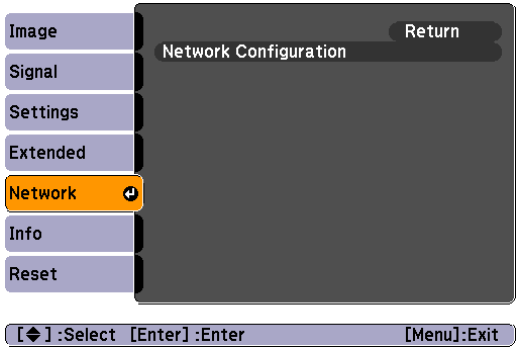

Sub Menu	Function
Network Configuration	The following menus are available for setting network items. **Basic**, **Wireless LAN**, **Security**, **Wired LAN**, **Mail**, **Others**, **Reset** and **Setup complete**.

By using the Web browser of a computer connected to the projector on a network, you can set the projector's functions and control the projector. This function is called "Web control". You can easily enter text using a keyboard to make settings for Web control such as security settings. See your *Network Operation Guide* for more information.

Notes on operating the network menu

Selecting from the top menu and sub menus, and changing of selected items are the same as operations in the configuration menu.

When done, make sure you go to the **Setup complete**, and select **Yes**, **No**, or **Cancel**. When you select **Yes** or **No**, you return to the configuration menu.

Yes: Saves the settings and exits the **Network** menu.

No: Exits to the **Network** menu without saving the settings.

Cancel: Continues displaying the **Network** menu.

Soft keyboard operations

The **Network** menu contains items that require input of alphanumerics during setup. In this case, the following software keyboard is displayed. Use the [◎] button on the remote control or [⏢/▲], [⏢/▼], [◁/◀], and [▷/▶] on the projector to move the cursor to the desired key, and then press the [Enter] button to enter the alphanumeric. Enter figures by holding down the [Num] button on the remote control, and pressing the numeric buttons. After inputting, select **Finish** on the keyboard and press [Enter] to confirm your input. Select **Cancel** on the keyboard and press [Enter] to cancel your input.

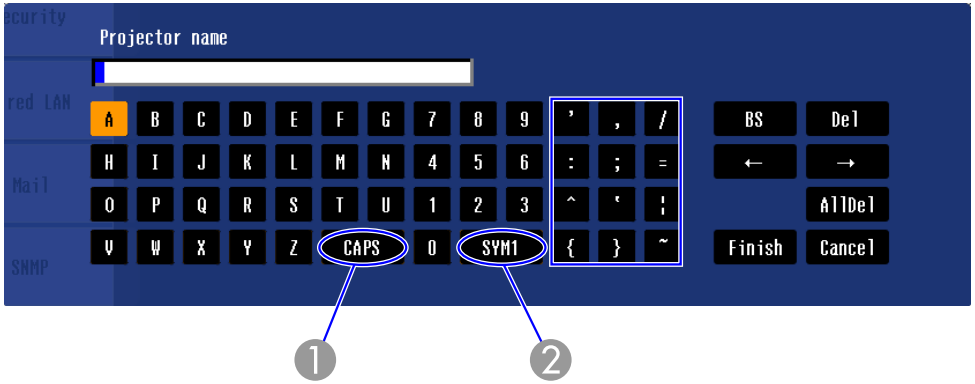

❶ Each time this key is selected, it sets and changes between upper case and lower case letters.

❷ Each time this key is selected, it sets and changes the symbol keys for the section enclosed by the frame.

Basic Menu

Sub Menu	Function
Projector Name	Displays the projector name used to identify the projector when connected to a network. When editing, you can enter up to 16 single-byte alphanumeric characters.
PJLink Password	Set a password to use when you access the projector using compatible PJLink software. ☛ p.148 You can enter up to 32 single-byte alphanumeric characters.
Web Control Password	Set a password to use when making settings and controlling the projector using Web Control. You can enter up to 8 single-byte alphanumeric characters. Web control is a computer function that allows you to set up and control the projector by using the Web browser on a computer connected on a network. See your *Network Operation Guide* for more information.
Projector keyword	When set to **On**, you have to enter the keyword when you try to connect the projector to a computer on a network. As a result, you can prevent presentations from being interrupted by unscheduled connections from the computer. Normally this should be set to **On**. See your *Network Operation Guide* for more information.

Wireless LAN Menu (only when the optional Wireless 802.11a/b/g Module is installed)

Sub Menu	Function
Wireless LAN Power	Set to **Off** to deactivate the Wireless 802.11a/b/g Module connected to the projector. When set to **Off**, the Wireless 802.11a/b/g Module is treated as if it were not connected.
Connection mode	When the projector is connected to a computer with EasyMP Network Projection, set so that it is in a permanently connected mode.
Wi-Fi Protected Setup	When using a WPS (Wi-Fi Protected Setup) compatible access point via a wireless LAN, you can easily connect the projector to the access point and make security settings. ☛ p.133
Antenna level	Displays the wireless LAN wave strength.
Wireless LAN system	Sets the wireless LAN system.
SSID	Enter an SSID. When an SSID is provided for the wireless LAN system in which the projector participates, enter the SSID. You can enter up to 32 single-byte alphanumeric characters.
DHCP	You can set whether or not (**On**/**Off**) to use DHCP. If this is set to **On** you cannot set any more addresses.
IP Address	You can input the IP address assigned to the projector. You can input a number from 0 to 255 in each field of the address. However, the following IP addresses cannot be used. 0.0.0.0, 127.x.x.x, 224.0.0.0 to 255.255.255.255 (where x is a number from 0 to 255)

Sub Menu	Function
Subnet Mask	You can input the Subnet Mask for the projector. You can input a number from 0 to 255 in each field of the address. However, the following subnet masks cannot be used. 0.0.0.0, 255.255.255.255
Gateway Address	You can input the IP address for the gateway for the projector. You can input a number from 0 to 255 in each field of the address. However, the following Gateway addresses cannot be used. 0.0.0.0, 127.x.x.x, 224.0.0.0 to 255.255.255.255 (where x is a number from 0 to 255)
MAC Address	Displays the MAC address.
SSID Display	To prevent the SSID from being displayed on the LAN Standby screen, set this to **Off**.
IP Address	To prevent the IP address from being displayed on the LAN Standby screen, set this to **Off**.

Security menu (Only available when the optional Wireless 802.11a/b/g/ Module is installed)

When the optional Wireless 802.11a/b/g Module is installed and being used in Manual Mode, it is strongly recommended that you set security.

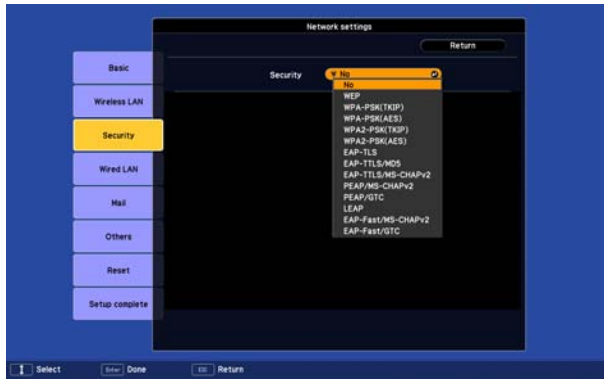

Sub Menu	Function
Security	Select one of the following security methods. When setting up security, follow the instructions from the administrator of the network system you are about to access. **WEP**: Data is encrypted with a code key (WEP key) This mechanism prevents communication unless the encrypted keys for the access point and the projector match. **WPA**/WPA2: This is an encryption standard that improves security which is a weak point of WEP. Although there are multiple kinds of WPA encryption methods, this projector uses "TKIP" and "AES". WPA also includes user authentication functions. WPA authentication provides two methods: using an authentication server, or authenticating between a computer and an access point without a server. This projector supports the latter method, without a server. **EAP**: EAP is a protocol used for communication between clients and authentication severs. These are multiple protocols, such as EAP-TLS which uses electronic certification for user authentication, LEAP which uses user name and password, and EAP-TTLS.

Type of security

System	Authentication
EAP-TLS	Digital certificate, CA certificate
EAP-TTLS/MD5	User name, Password
EAP-TTLS/MS-CHAPv2	User name, Password
PEAP/MS-CHAPv2	User name, Password
PEAP/EAP-GTC	User name, Password
LEAP	User name, Password
EAP-Fast/MS-CHAPv2	User name, Password
EAP-Fast/GTC	User name, Password

Type of certificate that can be registered (when EAP-TLS is selected)

Type	Extension	Notes
Client certificate	.pfx	Certificates without passwords (NULL) are not supported.
CA certificate	.cer	Binary encoded files (DER) BASE64 encoded files are not supported.

- If using EAP, you need to make settings at the projector that match the authentication server settings. Check with your network administrator for details on RADIUS settings.
- Open “Network Menu” – “Certificate” in “Web Control” to register a digital certificate and a CA certificate to the projector. Only one set of a digital certificate and a CA certificate can be registered to the projector. These certificates are used with EAP-TLS.

When WEP is selected

The following items can be set.

Sub Menu	Function
WEP encryption	You can set the encryption for WEP encoding. **128 Bit**: Uses 128 (104) bit encoding **64 Bit**: Uses 64 (40) bit encoding
Format	You can set the input method for the WEP encrypted key. **ASCII**: Input text. The method of inputting the encrypted WEP with text differs depending on the access point. Check with the network administrator for the network in which the projector participates, and then set to "ASCII". **HEX**: Input in hexadecimal.
Key ID	Selects the WEP encryption ID key.

Sub Menu	Function
Encryption key 1/Encryption key 2/Encryption key 3/Encryption key 4	You can enter the key used for WEP encryption. Enter the key in single-byte characters following instructions from the network administrator for the network in which the projector participates. The type of character and the number that can be entered differ according to the **WEP encryption** and **Format** settings. If the number of characters you enter is shorter than the required character length, no character is encrypted. If the number of characters you enter is longer than the required character length, characters that exceed the permitted number are not encrypted. **128 Bit** - **ASCII**: Single-byte alphanumerics, 13 characters. **64 Bit** - **ASCII**: Single-byte alphanumerics, 5 characters. **128 Bit** - **HEX**: 0 to 9 and A to F, 26 characters **64 Bit** - **HEX**: 0 to 9 and A to F, 10 characters
Authentication Type	You can set Authentication Type for WEP encoding. **Open**: Method to connect access point with no authentication. **Shared**: Authentication Type using WEP key.

When WPA-PSK (TKIP) or WPA2-PSK (AES) are selected

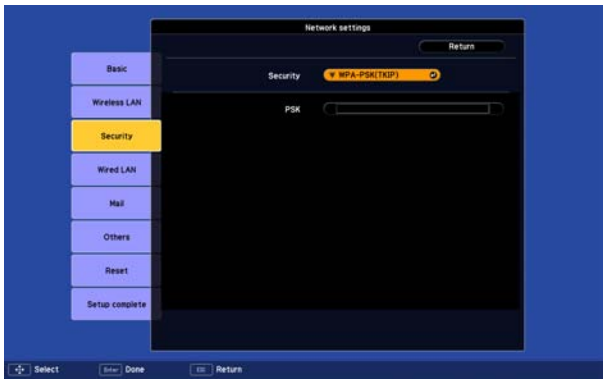

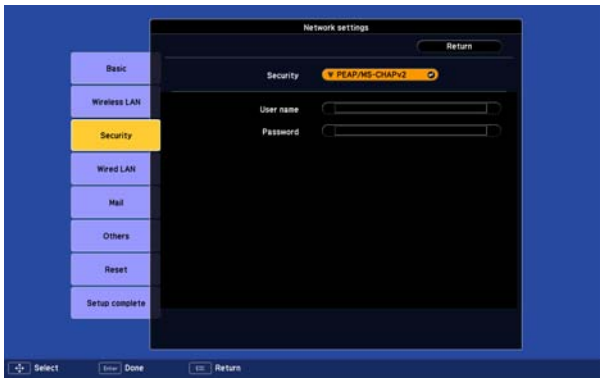

The following items can be set.

Sub Menu	Function
PSK (Encryption key)	You can enter a Pre-Shared Key (encrypted key) in single-byte alphanumeric characters. Enter at least 8 and up to 63 characters. When the Pre- Shared Key is entered and the Enter button is pressed, the value is set and displayed as an asterisk (*). You cannot enter more than 32 characters on the configuration menu. When setting from Web Control, you can enter more than 32 characters. See your *Network Operation Guide* for more information.

When EAP-TLS is selected

The following items can be set.

Sub Menu	Function
Issued to/Issued by/Validity period	Information in the certificate is displayed. You cannot enter.

When EAP-TTLS/MD5, EAP-TTLS/MS-CHAPv2, PEAP/MS-CHAPv2, PEAP/GTC, LEAP, EAP-Fast/MS-CHAPv2 or EAP-FAST/GTC are selected

The following items can be set.

Sub Menu	Function
User name	You can enter a user name to be used for authentication in single-byte alphanumeric characters (no spaces). You can enter up to 64 characters. You cannot enter more than 32 characters on the configuration menu. When setting from Web Control, you can enter more than 32 characters. See your *Network Operation Guide* for more information.
Password	You can enter an authentication password in single-byte alphanumeric characters. You can enter up to 64 characters. When the password is entered and the Enter button is pressed, the value is set and displayed as an asterisk (*). You cannot enter more than 32 characters on the configuration menu. When setting from Web Control, you can enter more than 32 characters. See your *Network Operation Guide* for more information.

Wired LAN Menu

Sub Menu	Function
DHCP	You can set whether or not (**On**/**Off**) to use DHCP. If this is set to **On** you cannot set any more addresses.
IP Address	You can input the IP address assigned to the projector. You can input a number from 0 to 255 in each field of the address. However, the following IP addresses cannot be used. 0.0.0.0, 127.x.x.x, 224.0.0.0 to 255.255.255.255 (where x is a number from 0 to 255)
Subnet Mask	You can input the Subnet Mask for the projector. You can input a number from 0 to 255 in each field of the address. However, the following subnet masks cannot be used. 0.0.0.0, 255.255.255.255
Gateway Address	You can input the IP address for the gateway for the projector. You can input a number from 0 to 255 in each field of the address. However, the following Gateway addresses cannot be used. 0.0.0.0, 127.x.x.x, 224.0.0.0 to 255.255.255.255 (where x is a number from 0 to 255)
MAC Address	Displays the MAC address.
IP Address Display	To prevent the IP address from being displayed on the LAN Standby screen, set this to **Off**.

Mail Menu

When this is set, you receive an e-mail notification if a problem or warning occurs in the projector. For information on the contents of the sent e-mail, ☛ p.144

Sub Menu	Function
Mail Notification	You can set whether or not (**On**/**Off**) to be notified by e-mail.
SMTP Server	You can input the IP address for the SMTP server for the projector. You can input a number from 0 to 255 in each field of the address. However, the following IP addresses cannot be used. 127.x.x.x, 224.0.0.0 to 255.255.255.255 (where x is a number from 0 to 255)
Port Number	You can input the port number for the SMTP server. The default value is 25. You can input numbers between 1 to 65535.
Email Address 1/Email Address 2/Email Address 3	You can input the e-mail address of the destination to send the notification e-mail to. You can register up to three destinations. You can enter up to 64 single-byte alphanumeric characters for the e-mail addresses. You cannot enter more than 32 characters on the configuration menu. When setting from Web Control, you can enter more than 32 characters.
Setting a Notification Event	You can select the problems or warnings to be notified about by e-mail. When the selected problem or warning occurs in the projector, an e-mail is sent to the specified **Email Address** notifying that a problem or warning has occurred. You can select multiple items from the displayed items.

Others Menu

Sub Menu	Function
Trap IP Address 1/Trap IP Address 2	You can register up to two for the SNMP trap notification destination. You can input a number from 0 to 255 in each field of the address. However, the following IP addresses cannot be used. 127.x.x.x, 224.0.0.0 to 255.255.255.255 (where x is a number from 0 to 255) To use SNMP to monitor the projector, you need to install the SNMP manager program on your computer. SNMP should be managed by a network administrator.
Priority gateway	For the priority gateway, select either **Wireless LAN** or **Wired LAN**.
AMX Device Discovery	When the projector is connected to a network, set this to **On** to allow the projector to be detected by AMX Device Discovery. Set this to **Off** if you are not connected to an environment controlled with a controller from AMX or AMX Device Discovery.

Reset Menu

Resets all of the network settings.

Sub Menu	Function
Reset network settings.	To reset all of the network settings, select **Yes**. After you reset all the settings, the **Basic** menu appears.

Info Menu (Display Only)

Lets you check the status of the image signals being projected and the status of the projector. Items that can be displayed vary depending on the image signal being projected as shown in the following screen shots.

Analog RGB/Digital RGB/ Component Video/Digital Component Video

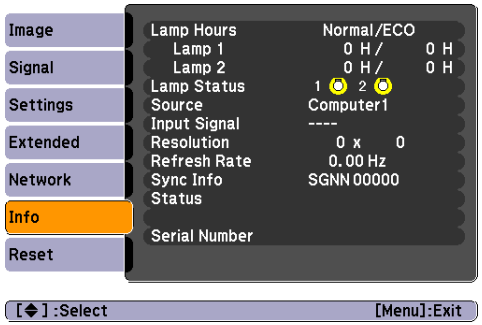

Composite video/S-Video

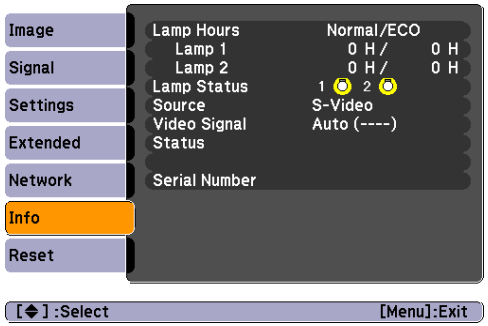

Sub Menu	Function
Lamp Hours	You can display the cumulative lamp operating time*. When it reaches the lamp warning time, the characters are displayed in yellow.
Lamp Status	The following icons show the status of the lamps. : Lighted : Disable When is displayed, the lamp is not operating normally. See "Reading the Indicators".
Source	You can display the Source name for the connected equipment currently being projected.
Input Signal	You can display the Input Signal selected in the Signal menu.
Resolution	You can display the Resolution.
Video Signal	You can display the Video Signal selected in the Signal menu.
Refresh Rate	You can display the Refresh Rate.
Sync Info	You can display the image signal Info. This information may be needed if service is required.

Sub Menu	Function
Status	This is Info about errors that have occurred on the projector. This information may be needed if service is required.
Serial Number	Displays the projector's serial number.

* The cumulative use time is displayed as "0H" for the first 10 hours. 10 hours and above is displayed as "10H", "11H", etc.

Reset Menu

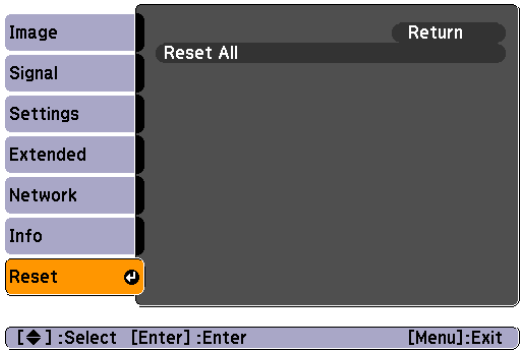

Sub Menu	Function
Reset All	You can reset all items in the configuration menu to their default settings. The following items are not reset to their defaults: Input Signal, User's Logo, Multi-screen, all items for Network menus, Lamp Hours, and Language.

Projector Menu and Options List

The table below summarizes the options you can select based on the projector menu you are viewing. Some options may not be available depending on the input source you are using.

For more information on these menus and options, read this chapter.

Menu	Options
Image	Color Mode Brightness Contrast Color Saturation Tint Sharpness Abs. Color Temp. Color Adjustment Auto Iris Reset
Signal	Auto Setup Resolution Tracking Sync. Position Progressive Noise Reduction DVI/HDMI Video Range Input Signal Video Signal Aspect Overscan Reset

Menu	Options
Settings	Keystone Control Panel Lock Lens Operation Lock Pointer Shape Power Consumption Remote Receiver User Button Test Pattern Reset
Extended	Display Closed Caption User's Logo Projection Direction Operation Standby Mode Air Filter Notice Projector ID Multi-screen Language Reset
Network	Basic[*1] Wireless LAN[*2] Security[*2] Wired LAN PJLink Password[*3] Web Control Password[*3] SNMP[*3] Mail AMX Device Discovery[*3] Projector Name[*3] Others[*1] Reset

Menu	Options
Info	Lamp Hours Lamp Status Source Input Signal Resolution Video Signal Refresh Rate Sync Info Status Serial Number
Reset	Reset All

*1 PowerLite Pro Z8050WNL only

*2 PowerLite Pro Z8050WNL with optional Wireless 801.11a/b/g Module only

*3 PowerLite Pro Z8000WUNL only

Troubleshooting

This chapter explains how to identify problems and what to do if a problem is found.

Using the Help Screen

If a problem occurs with the projector, press the [Help] button to display the Help screen. You can solve problems by answering the questions.

Procedure

1 Press the [Help] button.

The Help screen is displayed.

Remote Control

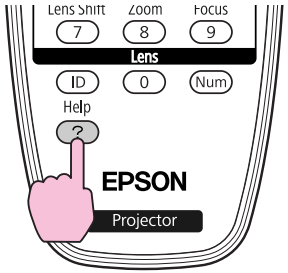

2 Select a menu item.

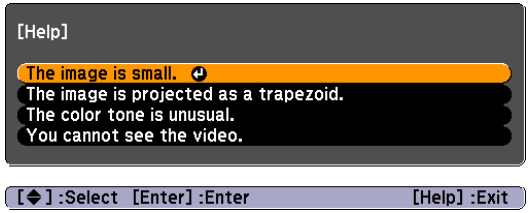

Remote Control

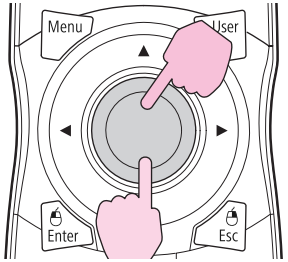

3 Confirm the selection.

Remote Control

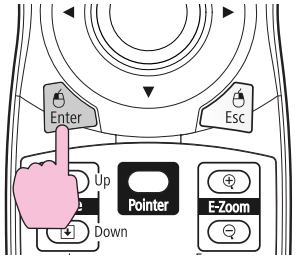

Questions and solutions are displayed as shown on the screen below.

Press the [Help] button to exit Help.

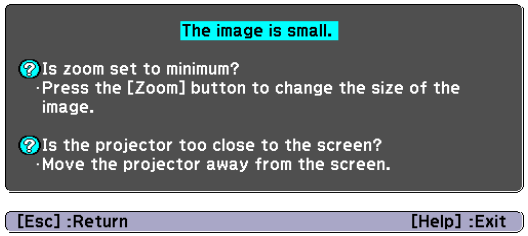

If the Help screen does not provide a solution to the problem, refer to "Problem Solving" p.101.

Problem Solving

If you are having a problem with the projector, first check the projector's indicators and refer to "Reading the Indicators". ☛ p.102

If the indicators do not show clearly what the problem might be, refer to "When the Indicators Provide No Help". ☛ p.107

Reading the Indicators

These indicators indicate the operating status of the projector.

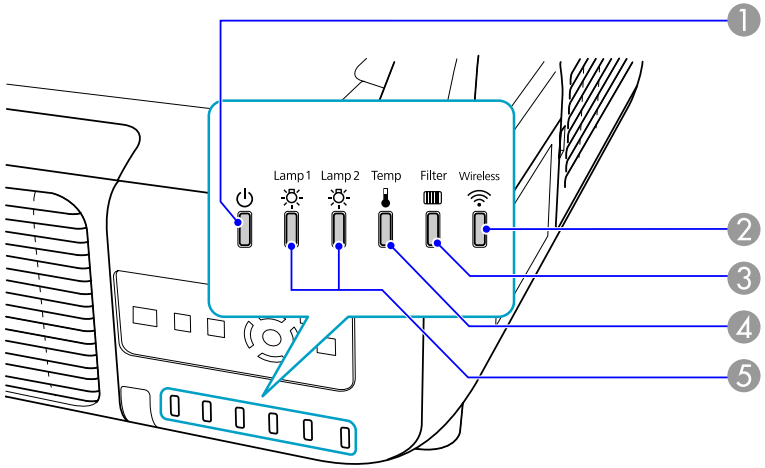

1 Indicates the operating status.

- Standby condition
  When the [⏻] button is pressed in this condition, projection starts.
- Preparing network monitoring or cool down in progress
  Buttons are disabled while the indicator is flashing.
- Warming up
  Warm-up time is about 30 seconds. After warm-up is complete, the indicator stops flashing.
  [⏻] button does not function during warm-up.
- Projecting

2 Indicates the operating status of the wireless LAN when the optional Wireless 802.11a/b/g Module is connected. (Powerlite Pro Z8050WNL only)

3 Indicates the air filter status.

4 Indicates the internal temperature status.

5 Indicates the projection lamp status.

Refer to the following table to see what the indicators mean and how to remedy problems that they indicate.
If all indicators are off, check that the power cable is connected correctly and that the power is being supplied normally.
Sometimes, when the power cable is unplugged, the ⏻ indicator remains lit for a short period, but this is not a malfunction.

⏻ Indicator is lit or flashing red

: Lit : Flashing: : Off

Status	Cause	Remedy or Status
⏻ ☼ ☼ 🌡 ▥ ■ ■ ■ ■ □	Internal Error	Stop using the projector, disconnect the power cable from the electrical outlet, and contact Epson. ☛ p.116
⏻ ☼ ☼ 🌡 ▥ ■ □ □ ■ □	Fan Error Sensor Error Cooling System Error	Stop using the projector, disconnect the power cable from the electrical outlet, and contact Epson. ☛ p.116
⏻ ☼ ☼ 🌡 ▥ ■ □ □ ■ □	High Temp Error (overheating)	The lamp turns off automatically and projection stops. Wait for about five minutes. After about five minutes the projector switches to standby mode, so check the following two points. • Check that the air filter and air exhaust vent are clear, and that the projector is not positioned against a wall. • If the air filter is clogged, clean or replace it. If the error continues after checking the points above, stop using the projector, disconnect the power cable from the electrical outlet, and contact Epson. ☛ p.116
		When using at an altitude of 4900 ft (1500 m) or more, set **High Altitude Mode** to **On**. ☛ p.73
		Set **Direction** to **Pointing Down** or **Pointing Up** when the projector is installed to project images downward or upward. ☛ p.73

Status	Cause	Remedy or Status
	Lamp Error Lamp Failure	Check the following two points. • Take out the both lamps and check if they are cracked. • Clean the air filter.
		If it is not cracked: Re-fit the lamp and turn on the power. **If the error continues**: Replace the lamp with a new lamp and turn on the power. **If the error continues**: Stop using the projector, disconnect the power cable from the electrical outlet, and contact Epson. ☛ p.116
		If it is cracked: Replace it with a new lamp, or contact Epson for further advice ☛ p.116. If replacing the lamp yourself, be careful to avoid pieces of broken glass (you cannot continue projecting until the lamp is replaced).
		When using at an altitude of 4900 ft (1500 m) or more, set **High Altitude Mode** to **On**. ☛ p.73
		Set **Direction** to **Pointing Down** or **Pointing Up** when the projector is installed to project images downward or upward. ☛ p.73
	Filter Airflow Error	Check the following two points. • Check that the air filter and air exhaust vent are clear, and that the projector is not positioned against a wall. • If the air filter is clogged, clean or replace it. If the error continues after checking the points above, stop using the projector, disconnect the power cable from the electrical outlet, and contact Epson. ☛ p.116
	Auto Iris Error Cinema filter error Shutter Error Power Err. (Ballast)	Stop using the projector, disconnect the power cable from the electrical outlet, and contact Epson. ☛ p.116

Indicator is flashing or lit

: Lit : Flashing : Off : Varies according to the projector status

Status	Cause	Remedy or Status
	High Temp Warning	(This is not an abnormality. However, if the temperature rises too high again, projection stops automatically.) • Check that the air filter and air exhaust vent are clear, and that the projector is not positioned against a wall. • If the air filter is clogged, clean or replace it.
	Replace Lamp	The lamp indicated by flashing indicator, lamp 1 or 2, is due for replacement. Replace it with a new lamp. If you continue to use the lamp after the replacement period has passed, the possibility that the lamp may explode increases. Replace it with a new lamp as soon as possible. We recommend replacing both lamps together to maintain consistent hue and brightness of projected images.
	Lamp Warning Supply System Warning (Ballast)	Check the following two points. • Remove the lamp indicated by the flashing indicator, lamp 1 or 2, and check if it is cracked. • Clean the air filter.
		If it is not cracked: Re-fit the lamp and turn on the power. **If the error continues**: Replace the lamp with a new lamp and turn on the power. **If the error continues**: Stop using the projector, disconnect the power cable from the electrical outlet, and contact Epson. ☛ p.116
		If it is cracked: Replace it with a new lamp, or contact Epson for further advice ☛ p.116. (Only one lamp is working. Replace the burned-out lamp as soon as possible.). If replacing the lamp yourself, be careful to avoid pieces of broken glass.
		When using at an altitude of 4900 ft (1500 m) or more, set **High Altitude Mode** to **On**. ☛ p.73
		Set **Direction** to **Pointing Down** or **Pointing Up** when the projector is installed to project images downward or upward. ☛ p.73
	No Air Filter Air Flow Sensor Err.	Check that the air filter is securely installed. The projector automatically turns off about one minute after it detects that there is no air filter. If the error continues even though an air filter is installed, the air filter sensor may be defective. Stop using the projector, disconnect the power cable from the electrical outlet, and contact Epson. ☛ p.116

Status	Cause	Remedy or Status
	Low Air Flow	(This is not an abnormality. However, projection stops automatically if the airflow falls any further.) The message "The air filter is clogged. Clean or replace the air filter." is displayed. Check the following two points. • Check that the air filter and air exhaust vent are clear, and that the projector is not positioned against a wall. • If the air filter is clogged, clean or replace it. If the Low Air Flow continues to be low after cleaning the air filter, replace the air filter with a new one. If the error continues after checking the points above, stop using the projector, disconnect the power cable from the electrical outlet, and contact Epson. ☛ p.116
	Air Filter Notice	The message "Time to clean the air filter. Clean or replace the air filter." is displayed. Clean the air filter. If the air filter is stained yellow with tobacco smoke and cannot be cleaned, replace it with a new one. The indicators or messages regarding "Air Filter Notice" are displayed only when **Air Filter Notice** is set to **On**, on the configuration menu's **Extended** menu. ☛ p.73

If the projector is not operating properly, even though the indicators are all showing normal, refer to “When the Indicators Provide No Help”. ☛ p.107
If the error is not indicated in this table, Stop using the projector, disconnect the power cable from the electrical outlet, and contact Epson. ☛ p.116

When the Indicators Provide No Help

If any of the following problems occur and the indicators do not offer a solution, refer to the pages given for each problem.

Problems relating to images

- "No images appear" ☛ p.108

  Projection does not start, the projection area is completely black, the projection area is completely blue, etc.
- "Moving images are not displayed" ☛ p.108

  Moving images being projected from a computer appear black and nothing is projected.
- "Projection stops automatically" ☛ p.109
- "The message "Not supported" is displayed." ☛ p.109
- ""No Signal" is displayed." ☛ p.109
- "Images are fuzzy or out of focus" ☛ p.110
- "Interference or distortion appear in images" ☛ p.110

  Problems such as interference, distortion, or black & white checked patterns appear.
- "The image is truncated (large) or small, or the aspect is not suitable" ☛ p.111

  Only part of the image is displayed, or the height and width ratios of the image are not correct, and so on.
- "Image colors are not right" ☛ p.112

  The whole image appears purplish or greenish, images are black & white, colors appear dull, etc...(Computer monitors and LCD screens have different color reproduction performance, so that the colors projected by the projector and the colors appearing on the monitor may not necessarily match, but this is not a sign of a problem.)
- "Images appear dark" ☛ p.112

Problems when projection starts

- "No power supplied" ☛ p.113

Other problems

- "The Remote Control does not work" ☛ p.114
- "Nothing appears on the external monitor" ☛ p.114
- "I want to change the language for messages and menus" ☛ p.115
- "Mail is not received even if a problem occurs in the projector" ☛ p.115

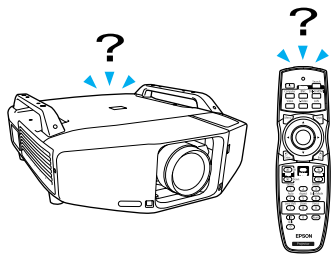

Problems relating to images

No images appear

Check	Remedy
Did you press the [⏻] button?	Press the [⏻] button to turn the power on.
Are the indicators switched off?	The power cable is not connected correctly or power is not being supplied normally. Connect the projector's power cable correctly. Check that your electrical outlet or power source is functioning correctly.
Is Shutter active?	Press the [Shutter] button on the Remote Control to cancel Shutter. ☛ p.46
Are the configuration menu settings correct?	Reset All of the settings. ☛ **Reset** Menu - **Reset All** p.95
Is the projected image completely black? **Only when projecting computer images**	Some input images, such as screen savers, may be completely black.
Is the image signal format setting correct? **Only when projecting images from a video source**	Change the setting according to the signal for the connected equipment. ☛ **Signal** Menu - **Video Signal** p.69

Moving images are not displayed

Check	Remedy
Is the computer's image signal being output to the LCD and the monitor? **Only when projecting images from a laptop computer or a computer with a built-in LCD screen**	Change the image signal to external output only. For more information, check your computer's documentation.

Projection stops automatically

Check	Remedy
Is **Sleep Mode** set to **On**?	Press the [⏻] button to turn the power on. If you do not want to use Sleep Mode, change the setting to **Off**. ☛ **Extended** Menu - **Operation** - **Sleep Mode** p.73
Is the air filter installed?	Check that the air filter is securely installed. The projector automatically turns off about one minute after it detects that there is no air filter.

The message "Not supported" is displayed.

Check	Remedy
Is the image signal format setting correct? **Only when projecting images from a video source**	Change the setting according to the signal for the connected equipment. ☛ **Signal** Menu - **Video Signal** p.69
Are the image signal Resolution and the Refresh Rate supported? **Only when projecting computer images**	Refer to the computer's documentation for how to change the image signal Resolution and the Refresh Rate output from the computer.

"No Signal" is displayed.

Check	Remedy
Are the cables connected correctly?	Check that all the cables required for projection are securely connected.
Is the correct input port selected?	Change the image by pressing the [Search] button on the Remote Control or the [Source Search] button on the Control panel. ☛ p.43
Is the power for the computer or video source turned on?	Turn the power on for the source.

Check	Remedy
Are the image signals being output to the projector? **Only when projecting images from a laptop computer or a computer with a built-in LCD screen**	If the image signals are only being output to the computer's LCD monitor or to the accessory monitor, you need to change the output to an external destination as well as the computer's own monitor. For some computer models, when the image signals are output externally, they no longer appear on the LCD monitor or accessory monitor. For more information, see your computer's documentation. If the connection is made while the power of the projector or computer is already turned on, the function [Fn] key that changes the computer's image signal to external output may not work. Turn the power for the computer and the projector off and then back on again. If the connection is made while the power of the projector or computer is already turned on, the function [Fn] key that changes the computer's image signal to external output may not work. Turn the power for the computer and the projector off and then back on again.

Images are fuzzy or out of focus

Check	Remedy
Is the focus adjusted correctly?	Press the [Focus] button on the remote control to adjust the focus.
Is the projector at the correct distance?	Is it projecting outside of the recommended projection distance range? Setup within the recommended range.
Is the Keystone adjustment value too large?	Lower the projection angle to reduce the amount of keystone correction.
Has condensation formed on the lens?	If the projector is suddenly taken from a cold environment to a warm environment, or if sudden ambient temperature changes occur, condensation may form on the surface of the lens, and this may cause the images to appear fuzzy. Set the projector up in the room about one hour before it is used. If condensation forms on the lens, turn the projector off and wait for the condensation to disappear.

Interference or distortion appear in images

Check	Remedy
Is the image signal format setting correct? **Only when projecting images from a video source**	Change the setting according to the signal for the connected equipment. ☛ **Signal** Menu - **Video Signal** p.69
Are the cables connected correctly?	Check that all the cables required for projection are securely connected.

Check	Remedy
Is an extension cable being used?	If an extension cable is used, electrical interference may affect the signals. Use the cables supplied with the projector to check if the cables you are using may be causing the problem.
Is the correct resolution selected? **Only when projecting computer images**	Set the computer so that the signals being output are compatible with the projector. For more information, see your computer documentation.
Are the "Sync." and "Tracking" settings adjusted correctly? **Only when projecting computer images**	Press the [Auto] button on the Remote Control or the [Enter] button on the Control panel to perform automatic adjustment. If the images are not adjusted correctly after using automatic adjustment, you can make the adjustments using **Sync.** and **Tracking** from the configuration menu. ☛ **Signal** Menu - **Tracking**, **Sync.** p.69

The image is truncated (large) or small, or the aspect is not suitable

Check	Remedy
Is the aspect adjusted correctly?	Press the [Aspect] button on the Remote Control to select an aspect suitable for the input source. ☛ p.47
Is a wide panel computer image being projected? **Only when projecting computer images**	Change the setting according to the signal for the connected equipment. ☛ **Signal** Menu - **Resolution** p.69
Is the image still being enlarged by E-Zoom?	Press the [Esc] button on the Remote Control to cancel E-Zoom. ☛ p.53
Is **Position** adjusted correctly?	Press the [Auto] button on the Remote Control or the [Enter] button on the Control panel to perform automatic adjustment when the computer image is projected. If the images are not adjusted correctly after using automatic adjustment, you can make the adjustments using **Position** from the configuration menu. Apart from computer image signals, you can adjust other signals while projecting by adjusting **Position** from the configuration menu. ☛ **Signal** Menu - **Position** p.69
Is the computer set for dual display? **Only when projecting computer images**	If dual display is activated in the "Display Properties" of the computer's Control panel, only about half of the image on the computer screen is projected. To display the entire image on the computer screen, turn off the dual display setting. ☛ Computer video driver documentation
Is the correct resolution selected? **Only when projecting computer images**	Set the computer so that the signals being output are compatible with the projector. ☛ Computer documentation

Image colors are not right

Check	Remedy
Do the input signal settings match the signals from the connected device?	Change the following settings according to the signal for the connected equipment. When image is from a device connected to the Computer or BNC input port ☛ **Signal** menu - **Input Signal** p.69 When image is from a device connected to the Video or S-Video input port ☛ **Signal** menu - **Video Signal** p.69
Is the image Brightness set correctly?	Adjust the **Brightness** setting from the configuration menu. ☛ **Image** Menu - **Brightness** p.67
Are the cables connected correctly?	Check that all the cables required for projection are securely connected.
Is Contrast adjusted correctly?	Adjust the **Contrast** setting from the configuration menu. ☛ **Image** Menu - **Contrast** p.67
Is the Color Adjustment correctly?	Adjust the **Color Adjustment** setting from the configuration menu. ☛ **Image** Menu - **Color Adjustment** p.67
Are the Color Saturation and Tint adjusted correctly? **Only when projecting images from a video source**	Adjust the **Color Saturation** and **Tint** settings from the configuration menu. ☛ **Image** Menu - **Color Saturation**, **Tint** p.67

Images appear dark

Check	Remedy
Is the image Brightness set correctly?	Adjust the **Brightness** and **Power Consumption** settings from the configuration menu. ☛ **Image** Menu - **Brightness** p.67 ☛ **Settings** Menu - **Power Consumption** p.71
Is Contrast adjusted correctly?	Adjust the **Contrast** setting from the configuration menu. ☛ **Image** Menu - **Contrast** p.67
Is the lamp due for replacement?	When the lamp is nearly ready for replacement, the images become darker and the color quality becomes poorer. When this happens, replace the lamp with a new lamp.

Problems when projection starts

No power supplied

Check	Remedy
Did you press the [⏻] button?	Press the [⏻] button to turn the power on.
Are the indicators switched off?	The power cable is not connected correctly or power is not being supplied normally. Disconnect and then reconnect the power cable. Check that your electrical outlet or power source is functioning correctly.
Do the indicators turn on and off when the power cable is touched?	There is probably a poor contact in the power cable, or the power cable may be defective. Reinsert the power cable. If this does not solve the problem, stop using the projector, disconnect the power cable from the electrical outlet, and contact Epson. ☛ p.116
Is the **Control Panel Lock** set to **Full Lock**?	Press the [⏻] button on the Remote Control. If you do not want to use Control Panel Lock, change the setting to **Off**. ☛ **Settings** Menu - **Control Panel Lock** p.62
Is the correct setting for the remote receiver selected?	Check the **Remote Receiver** from the configuration menu. ☛ **Settings** Menu - **Remote Receiver** p.71
Was the power cable plugged back in or was the breaker turned on immediately after Direct Power Off?	Even when **Direct Power On** is set to **On**, the power may not turn back on in these instances. Press the [⏻] button to turn the power back on.
Is the ID switch on the side of the remote control set to On?	When the switch is set to On, you can use the remote control to operate only a projector with a matching ID. Set ID switch to Off ☛ p.55
Are the lamp cover and lamp installed correctly?	If the lamp or lamp cover is installed incorrectly, the projector cannot be turned on. Check how it is installed.

Other problems

The Remote Control does not work

Check	Remedy
Is the remote control light-emitting area pointing towards the remote receiver on the projector when it is operated?	Point the remote control towards the Remote Receiver. Operating range ☛ p.19
Is the remote control too far from the projector?	The operating range for the remote control is about 49 ft (15 m).
Is direct sunlight or strong light from fluorescent lamps shining onto the Remote Receiver?	Set the projector up in a location where strong light does not shine onto the remote receiver. Or set the remote receiver to **Off** from **Remote Receiver** in the configuration menu. ☛ **Settings** Menu - **Remote Receiver** p.71
Is the correct setting for the remote receiver selected?	Check the **Remote Receiver** from the configuration menu. ☛ **Settings** Menu - **Remote Receiver** p.71
Are the batteries dead or have the batteries been inserted correctly?	Make sure the batteries are inserted correctly or replace the batteries with new ones if necessary.
Are the remote control ID and the projector ID matched?	Make sure the ID for the projector you want to operate and the ID for the remote control match. To operate all projectors by remote control regardless of the ID setting, set the ID switch on the side of the remote control to Off. ☛ p.55
Does **Remote Control Type** match the remote control that you are using?	Check the **Remote Control Type** on the configuration menu. ☛ **Extended** Menu - **Operation** - **Remote Control Type** p.73
Is the optional remote control cable connected to the remote control or to the projector's remote port?	When the remote control cable is connected, the remote control light-emitting area or the projector's remote receiver are disabled. When not using the remote control cable set, disconnect it from the remote control and the remote port.

Nothing appears on the external monitor

Check	Remedy
Are images input from a port other than the Computer or BNC input port?	The only images that can be displayed on an external monitor are computer images from the Computer or BNC input ports.

I want to change the language for messages and menus

Check	Remedy
Change the **Language** setting.	Adjust the **Language** setting from the configuration menu. ☛ **Extended** Menu - **Language** p.73

Mail is not received even if a problem occurs in the projector

Check	Remedy
Is **Standby Mode** set to **Communication On**?	To use the Mail Notification function when the projector is in standby, set **Communication On** in **Standby Mode** from the configuration menu. ☛ **Extended** Menu - **Standby Mode** p.73
Did a fatal abnormality occur and the projector come to a sudden stop?	When the projector comes to a sudden stop, e-mail cannot be sent. If the abnormal state continues, contact your Epson. ☛ p.116
Is power being supplied to the projector?	Check that your electrical outlet or power source is functioning correctly.
Is Mail function set correctly in the configuration menu?	Mail notification of problems is sent according to the **Mail** settings in the configuration menu. Check if it is set correctly.☛**Network** Menu - **Mail** p.75

Where to Get Help

Epson provides these technical support services:

Internet Support

Visit Epson's support website at www.epson.com/support and select your product for solutions to common problems. You can download utilities and documentation, get FAQs and troubleshooting advice, or e-mail Epson with your questions.

Speak to a Support Representative

To use the Epson PrivateLine Support service, call (800) 637-7661 and enter the PIN on the included Epson PrivateLine Support card. This is the fastest way of speaking to a live representative, and it's free. This service is available 6 AM to 6 PM, Pacific Time, Monday through Friday, for the duration of your warranty period.

You may also speak with a projector support specialist by dialing one of these numbers:

- U.S.: (562) 276-4394, 6 AM to 6 PM, Pacific Time, Monday through Friday.
- Canada: (905) 709-3839, 6 AM to 6 PM, Pacific Time, Monday through Friday.

Days and hours of support are subject to change without notice. Toll or long distance charges may apply.

Before you call for support, please have the following information ready:

- Product name (PowerLite Pro Z8000WUNL or PowerLite Pro Z8050WNL)
- Product serial number (located on the projector)
- Proof of purchase (such as a store receipt) and date of purchase
- Computer or video configuration
- Description of the problem

Purchase Supplies and Accessories

You can purchase screens and other accessories from an Epson authorized reseller. To find the nearest reseller, call 800-GO-EPSON (800-463-7766). Or you can purchase online at www.epsonstore.com (U.S. sales) or www.epson.ca (Canadian sales).

Appendix

This chapter provides information on maintenance procedures to ensure the best level of performance from the projector for a long time to come.

Installation Methods

The projector can be mounted on a ceiling or placed on a desk. Also, this projector can project images to various places because it can project images vertically or horizontally at each 90° angle.

Warning:

- *A special method of installation is required when installing the projector to project images downward (ceiling mount) or upward. If it is not installed correctly, it could fall and turnover causing an accident and injury.*
- *If you use adhesives on the Ceiling mount fixing points to prevent the screws from loosening, or if you use things such as lubricants or oils on the projector, the projector case may crack causing it to fall from its ceiling mount. This could cause serious injury to anyone under the ceiling mount and could damage the projector. When installing or adjusting the Ceiling mount, do not use adhesives to prevent the screws from loosening and do not use oils or lubricants.*
- *When mounting the projector on the ceiling, be sure to take measures to prevent it from falling such as passing a wire through the handles.*

Caution:

- *Do not install the projector in any positions other than those shown in the following illustrations, and do not install the projector at any angles other than those shown in the illustration on* ☛ *p.119*.
- *Do not use the projector upside down.*
- *Set the Direction properly in the configuration menu according to the angle of installation.* ☛ *p.73*
- *Using the projector at an improper angle or with the wrong configuration menu settings can cause malfunctions and shorten the operating life of optical parts.*

An optional Ceiling mount is required when suspending the projector from a ceiling. ☛ p.129

The Projection setting can be changed from the configuration menu. ☛ p.73

- Suspend the projector from the ceiling and project images from in front of a screen.

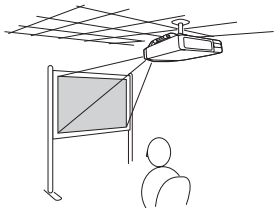

- Suspend the projector from the ceiling and project images from behind a translucent screen.

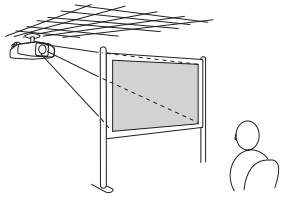

- Project images from in front of a screen.

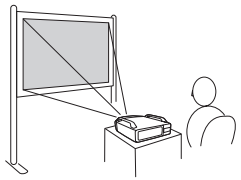

- Project images from behind a translucent screen.

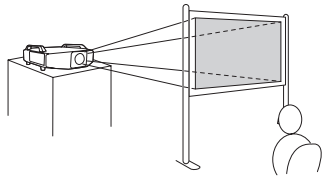

- Project images directly up

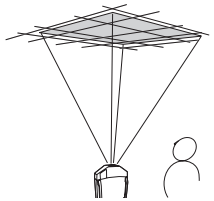

- Project images directly down

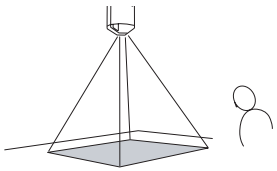

Do not install the projector at any angles other than those shown in the following illustration.

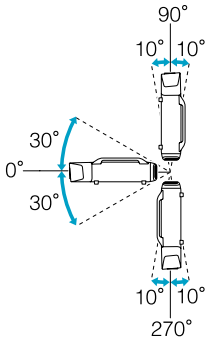

When the projector is mounted, you can remove the projector's feet and attach the foot covers, as shown below.

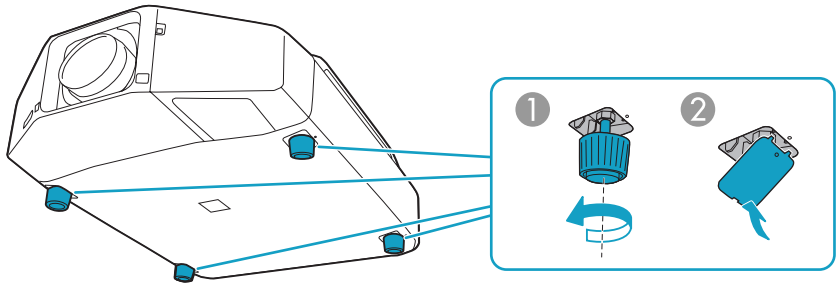

Cleaning

You should clean the projector if it becomes dirty or if the quality of projected images starts to deteriorate.

Warning:

Do not use sprays containing a flammable gas to remove dirt or dust which is adhering to parts such as the lens or filter of the projector.
This could cause a fire due to the high temperature of lamps inside the unit.

Cleaning the Projector's Surface

Clean the projector's surface by wiping it gently with a soft cloth.

If the projector is particularly dirty, moisten the cloth with water containing a small amount of neutral detergent, and then firmly wring the cloth dry before using it to wipe the projector's surface.

Caution:

Do not use volatile substances such as wax, alcohol, or thinner to clean the projector's surface. The quality of the case may change or become discolored.

Cleaning the Lens

Use a commercially available cloth for cleaning glasses to gently wipe the lens.

Caution:

Do not rub the lens with harsh materials or subject the lens to shocks, as it can easily become damaged.

Cleaning the Air filter

Clean the air filter and the air intake vent when the following message is displayed or the Filter indicator is flashing green.

"Time to clean the air filter."
"Clean or replace the air filter."

Caution:

- *If dust collects on the air filter it can cause the internal temperature of the projector to rise, and this can lead to problems with operation. Clean the air filter immediately when the message is displayed.*
- *Do not rinse the air filter in water. Do not use detergents or solvents.*
- *When using a brush for cleaning, use one with long soft bristles, and brush it lightly. If it is brushed too strongly, dust will be ground into the air filter and cannot be removed.*

Procedure

1. **Press the [⏻] power button on the remote control or the back of the projector to turn off the projector's power. After the confirmation buzzer beeps twice, disconnect the power cable.**

2 Remove the air filter cover.

Grip the air filter cover tab between your fingers, and pull up and remove the cover while pressing the tab.

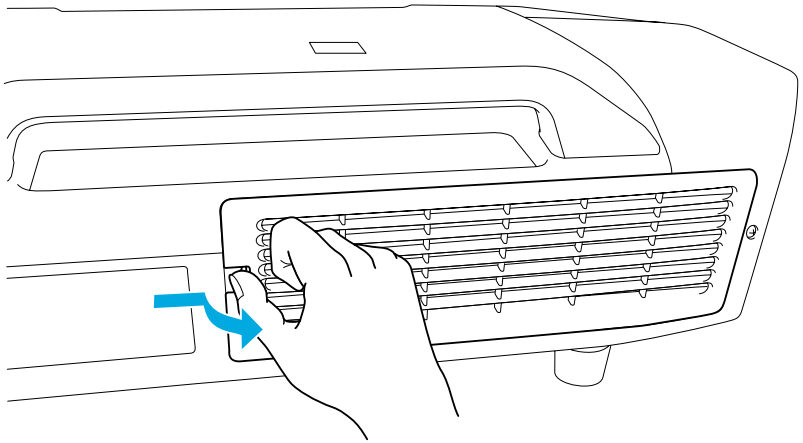

3 Remove the air filter.

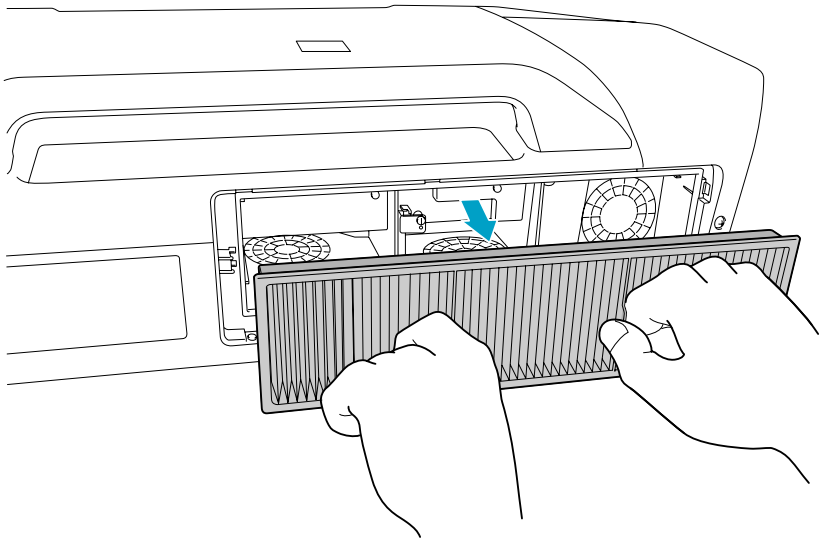

4 With the front (the side with tabs) of the air filter facing down, tap the air filter four or five times to shake off the dust.

Turn it over and tap the other side in the same way.

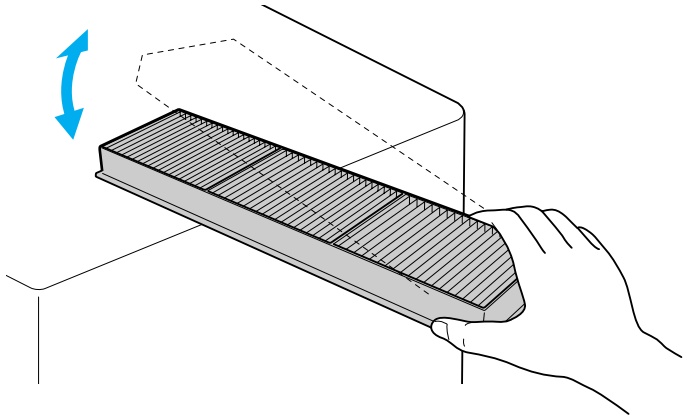

Caution:

If the air filter is hit too hard, it may become unusable due to deformities and cracks.

5 Remove any dust remaining on the air filter by using a vacuum cleaner on the front side.

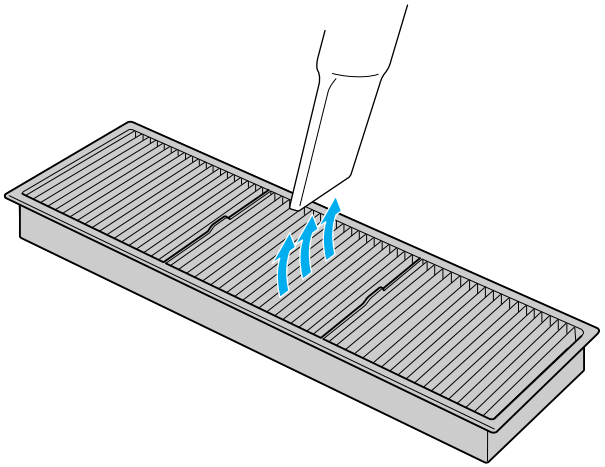

6 Reinsert the air filter.

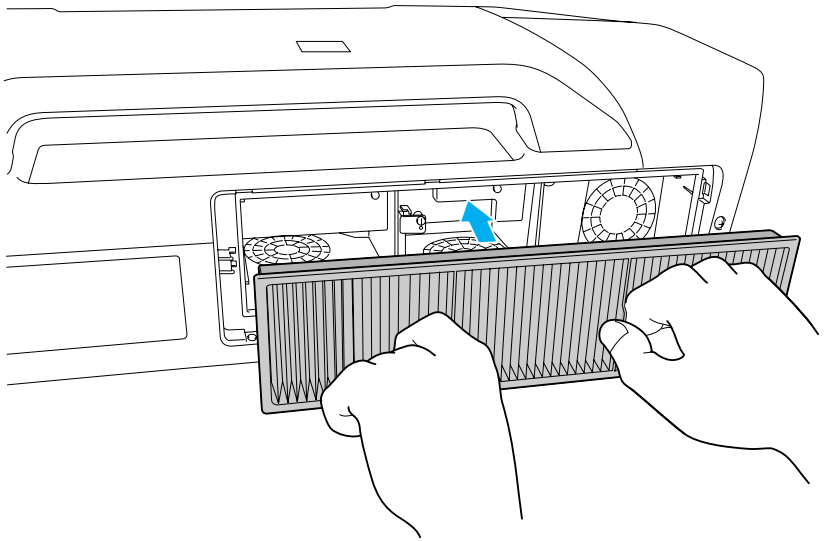

7 Reinsert the air filter cover.

Press the cover until it clicks into place.

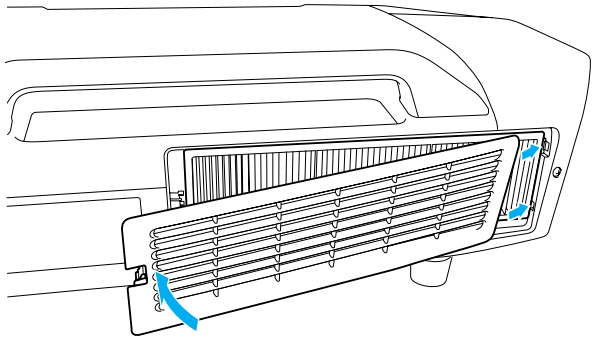

If a message is frequently displayed, even after cleaning, it is time to replace the air filter. Replace it with a new air filter. ☛ p.127

Replacing Consumables

This section explains how to replace the Remote Control batteries, the lamp, and the air filter.

Replacing the Remote Control Batteries

If delays in the responsiveness of the Remote Control occur or if it does not operate after it has been used for some time, it probably means that the batteries are becoming drained. When this happens, replace them with two new AA size alkaline batteries.

Caution:

Make sure you read the Safety Instructions before handling the batteries. ☛ *p.165*

Procedure

1 Remove the battery cover.

While pushing the battery compartment cover catch, lift the cover up.

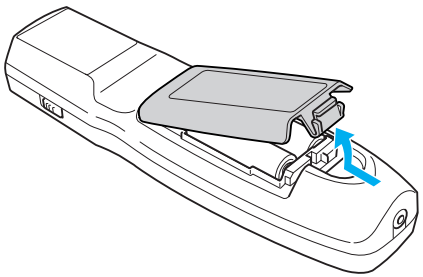

2 Replace the old batteries with new batteries.

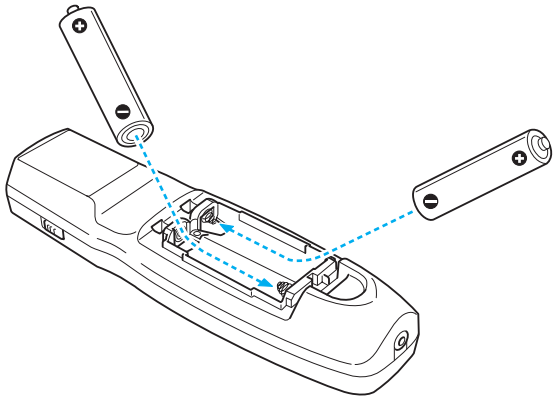

Caution:

Check the positions of the (+) and (-) marks inside the battery holder to ensure the batteries are inserted the correct way.

3 Reinstall the battery cover.

Press the battery compartment cover until it clicks into place.

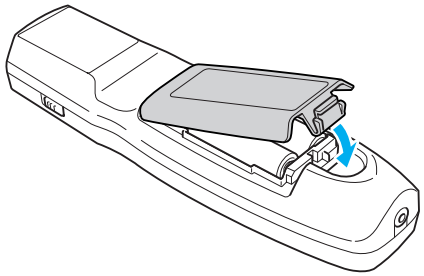

Replacing the Lamp

Lamp replacement period

It is time to replace the lamp when:

- The message "Replace the lamp." is displayed at the lower left of the projection screen when you start projecting.

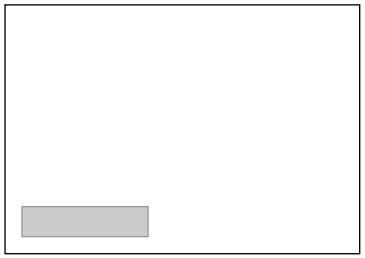

- The lamp indicator flashes orange.

  Replace the lamp indicated by the flashing indicator, either lamp 1 or 2.

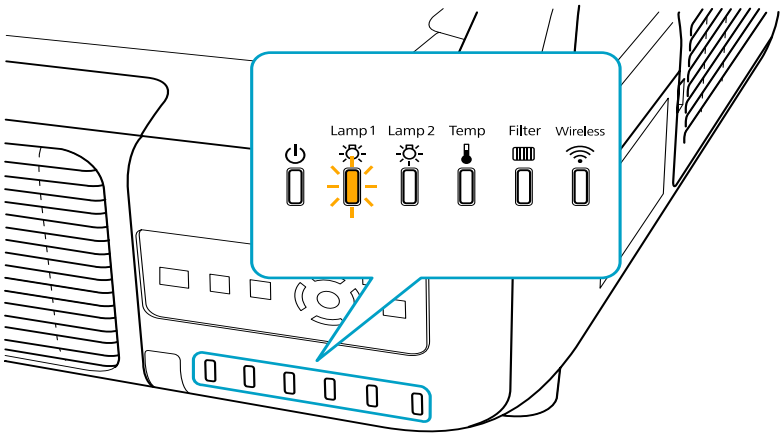

- The projected image gets darker or starts to deteriorate.

  Turn off this product when not in use to prolong the life of the projector.

Caution:

- *The lamp replacement message is set to appear after the following time periods in order to maintain the initial brightness and quality of the projected images.* ☛ *p.71*

  *Power Consumption setting continuously set to **Normal**: About 2400 hours*

  *Power Consumption setting continuously set to **ECO**: About 3400 hours*

- *Do not turn the projector on immediately after turning it off. Turning the projector on and off frequently may shorten the life of the lamps.*
- *If you continue to use the lamp after the replacement period has passed, the possibility that the lamp may explode increases. When the lamp replacement message appears, replace the lamp with a new one as soon as possible, even if it is still working.*
- *Depending on the characteristics of the lamp and the way it has been used, the lamp may become darker or stop working before the lamp warning message appears. You should always have two spare lamp units ready in case they are needed.*

How to replace the lamp

The lamp can be replaced even when the projector is suspended from a ceiling.

Warning:

- *When replacing a lamps because it has stopped illuminating, there is a possibility that the lamp may be broken. When replacing the lamp of a projector that is installed on the ceiling, you should always assume that the lamp is broken, and you should stand to the side of the lamp cover, not underneath it. Remove the lamp cover gently.*
- *Never disassemble or remodel the lamp. If a remodeled or reassembled lamp is installed into the projector and used, it could cause a fire, electric shock, or an accident.*

Warning:

Wait until the lamps have cooled down sufficiently before removing the lamp cover. If the lamp is still hot, burns or other injuries may result. It takes about one hour after the power has been turned off for the lamp to be cool enough.

Caution:

- *Never use the projector unless there are two lamps installed.*
- *We recommend replacing both lamps together to maintain consistent hue and brightness of projected images.*

Procedure

1. **Press the [⏻] power button on the remote control or the back of the projector to turn off the projector's power. After the confirmation buzzer beeps twice, disconnect the power cable.**

2. **Wait until the lamps have cooled down sufficiently before removing the lamp cover on the back of the projector.**

   Pinch the tabs on the front of the lamp cover together to release the lock. When the lock releases, pull the cover straight out.

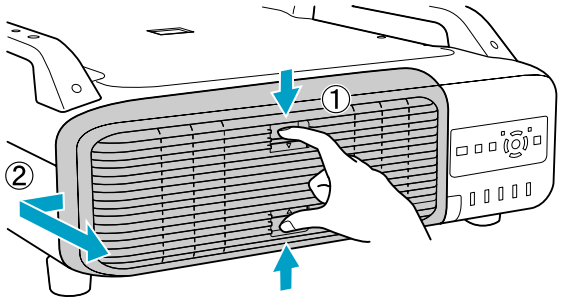

3. **Pull up the lock lever for the lamp you want to replace and pull the lamp straight out.**

   If the lamp is cracked, replace it with a new lamp, or contact Epson.
   ☛ p.116

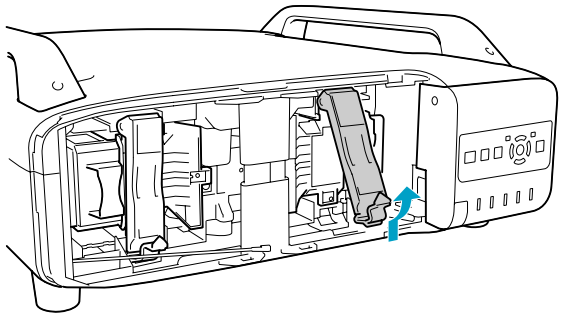

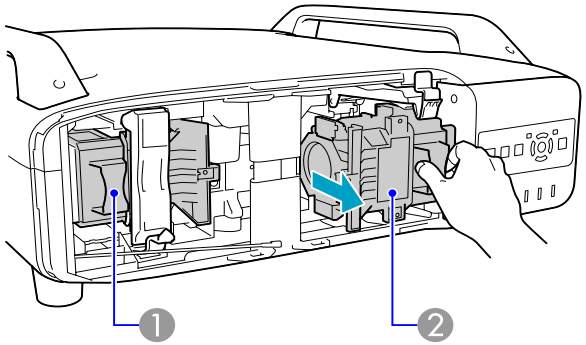

1 Lamp 1

2 Lamp 2

4 **Install the new lamp.**

Insert the new lamp along the guide rail in the correct direction so that it fits in place, push down firmly until it is fully inserted, and pull down the lock lever until it clicks into place.

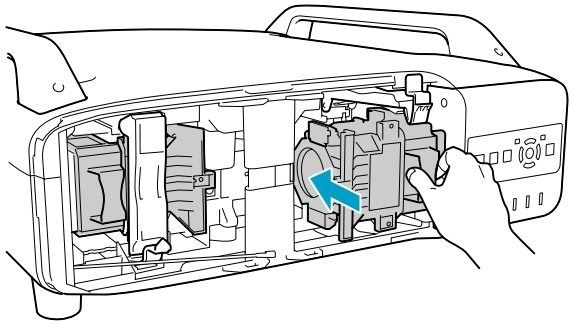

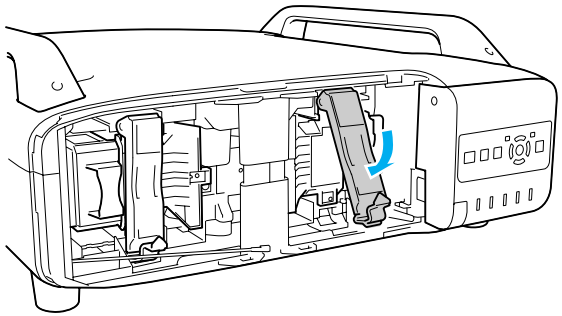

5 **Reinstall the lamp cover.**

Press the cover against the unit and slide it to the right until it clicks.

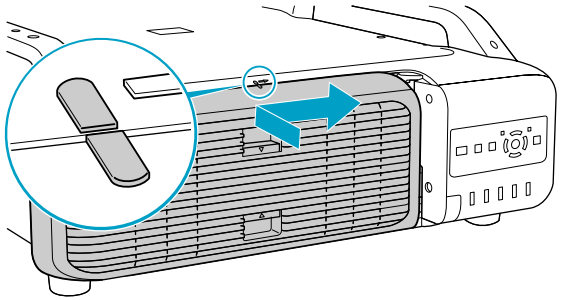

Caution:

- *Make sure you install the lamp securely. If the lamp cover is removed, the lamp turns off automatically as a safety precaution. If the lamp or the lamp cover is not installed correctly, the lamp does not turn on.*
- *(Hg) The lamp(s) in this product contain mercury. Please consult your state and local regulations regarding disposal or recycling. Do not put in the trash.*

Resetting the Lamp Hours

The projector records lamp life and a message and indicator notify you when it is time to replace the lamp. After replacing the lamps and turning on the power, the following message is displayed on the screen and you can reset the lamp-hour counter.

Select **Yes**, and then press the [Enter] button.

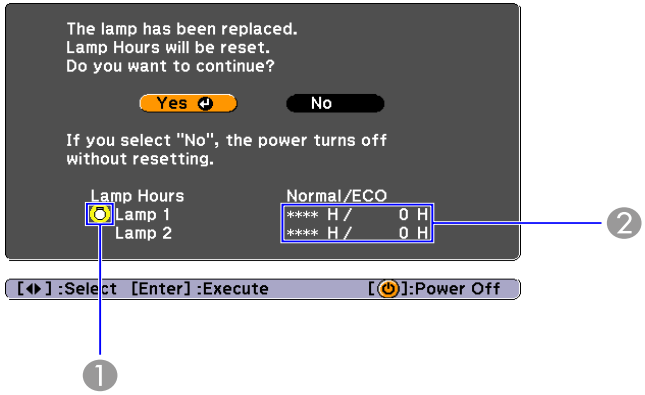

1 Indicates that lamp 1 has been replaced.

2 Displays the cumulative lamp operating time. If you select **Yes** and reset the Lamp Hours, the count for lamp 1 is set to 0H.

Replacing the Air Filter

Air filter replacement period

It is time to replace the air filter when:

- The air filter has turned brown.
- The message is displayed even though the air filter has been cleaned.

How to replace the air filter

The air filter can be replaced even when the projector is suspended from a ceiling.

Procedure

1. **Press the [⏻] power button on the remote control or the back of the projector to turn off the projector's power. After the confirmation buzzer beeps twice, disconnect the power cable.**

2. **Remove the air filter cover.**

   Grip the air filter cover tab between your fingers, and pull up and remove the cover while pressing the tab.

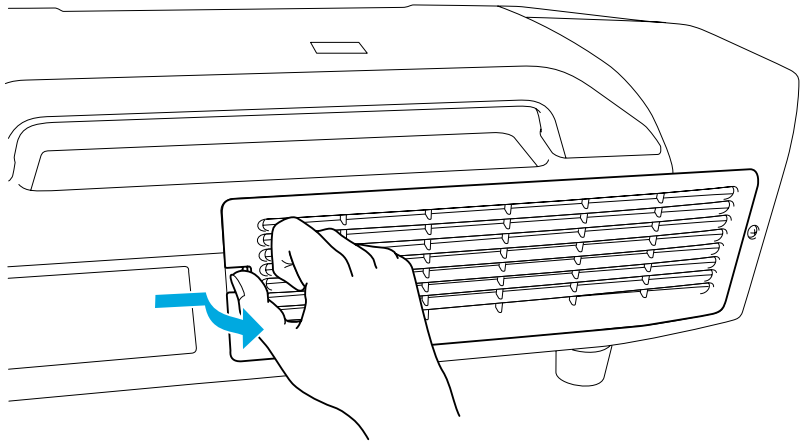

3 **Remove the air filter.**

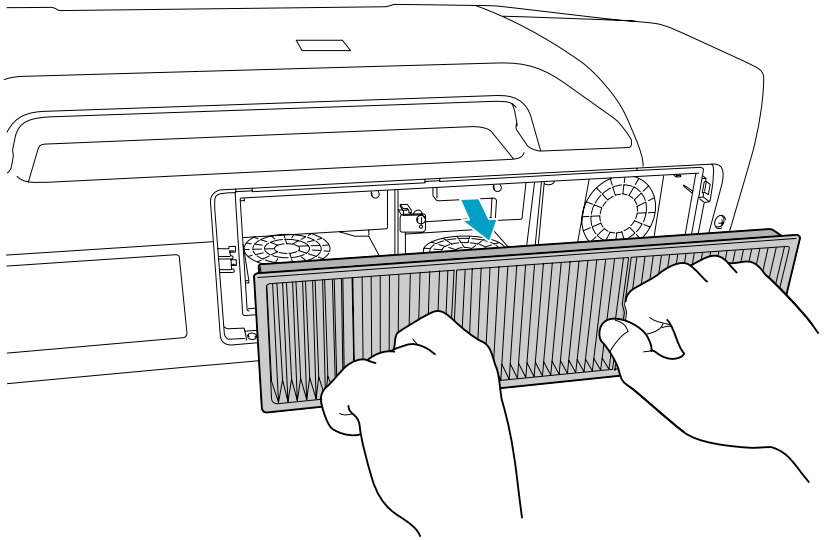

4 **Install the new air filter.**

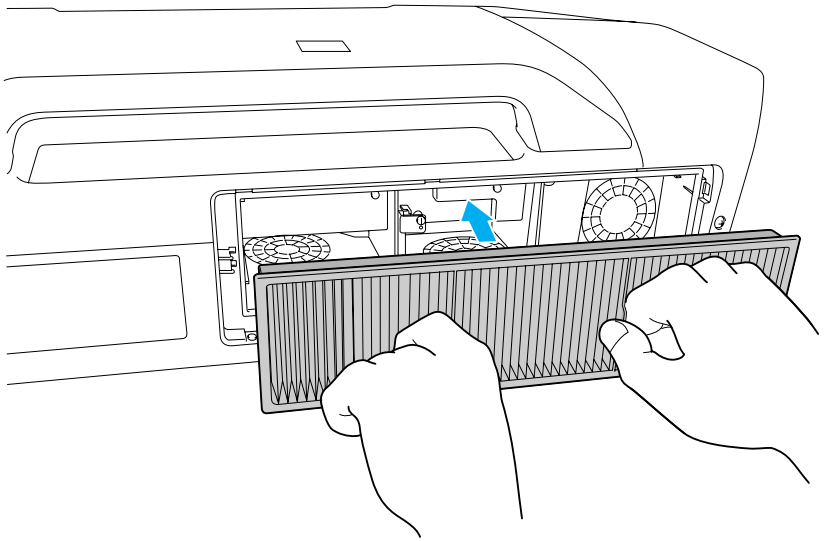

5 **Reinsert the air filter cover.**

Press until it clicks into place.

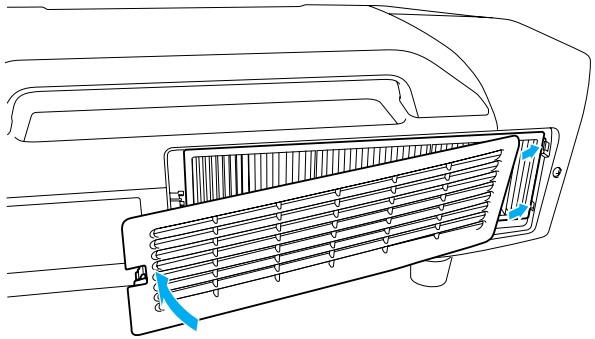

Caution:

The air filter contains Polypropylene. Dispose of used air filters properly in accordance with your local regulations.

Optional accessories

The following optional accessories and consumables are available.

Product	Part Number
Standard zoom lens (ELPLS04)	V12H004S04
Long throw zoom lens (ELPLL07)	V12H004L07
Middle throw zoom lens 1 (ELPLM06)	V12H004M06
Middle throw zoom lens 2 (ELPLM07)	V12H004M07
Rear projection wide lens (ELPLR04)	V12H004R04
Wide zoom lens (ELPLW04)	V12H004W04
Flush Ceiling Mount Bracket	V12H003B25
Mount Bracket with Extended Pipe	V12H003B26
Kensington security lock	ELPSL01
Hardware remote control cable set	V12H005C28
Replacement remote control	1512200
Wireless IR mouse receiver for remote control	V12H007T16
Wireless 802.11a/b/g Module (PowerLite Pro Z8050WNL only)	V12H306P11

Consumables

Product	Part Number
Air filter	V13H134A23
Replacement lamp unit one-pack (ELPLP51)	V13H010L51
Replacement lamp unit two-pack (ELPLP52)	V13H010L52

Notes on Transportation

There are many glass parts and precision components inside the projector. To prevent damage due to impacts when transporting, handle the projector as follows.

Moving Nearby

Do the following, and then carry carefully by the handles.

- Turn off the power to the projector and disconnect all cables.
- Attach the lens cover to the lens.
- Store the foot.

Warning:

Do not carry the projector by yourself. Two people are needed to unpack or carry the projector.

When Transporting

Preparing packaging

Use the lens shift function to horizontally and vertically center the lens. Then, follow the instructions in "Moving Nearby" and the additional instructions below.

- Remove the lens unit.
- Attach the cover that was on the lens mount when you purchased the projector.

Notes when packing and transporting

Enclose the projector securely in buffer material to protect it from shock, and place it into a strong cardboard container. Be sure to notify the carrier company that the contents are fragile.

Saving a User's Logo

You can save the image that is currently being projected as a User's Logo.

When a User's Logo is saved, the previous User's Logo is erased and the logo cannot be returned to the factory default.

Procedure

1 Project the image you want to use as the User's Logo, and then press the [Menu] button.

Using the Remote Control

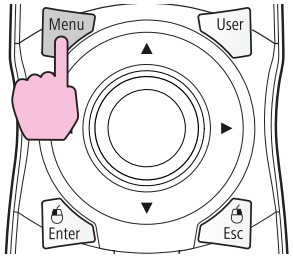

Using the Control panel

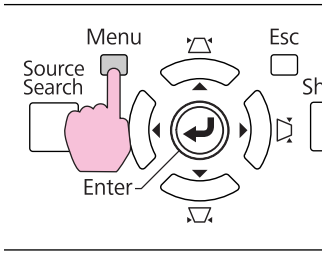

2 Select Extended - "User's Logo" from the configuration menu. ☛ "Using the Configuration Menu"

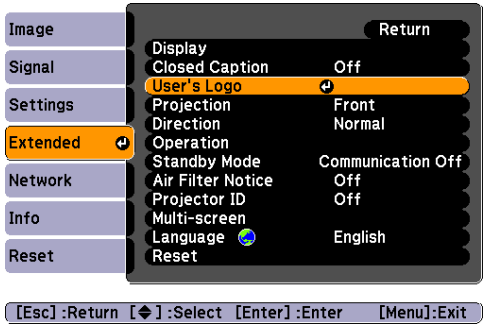

If **User's Logo Protect** from **Password Protect** is set to **On**, a message is displayed and the user's logo cannot be changed. You can make changes after setting **User's Logo Protect** to **Off**.☛ p.60

If **User's Logo** is selected when Keystone, E-Zoom, Aspect, or Progressive are being performed, the function currently being performed is cancelled.

3 When "Choose this image as the User's Logo?" is displayed, select "Yes".

When you press the [Enter] button on the Remote Control or the Control panel, the screen size may change according to the signal as it changes to the resolution of the image signal.

4 Move the box to select the part of the image to use as the User's Logo.

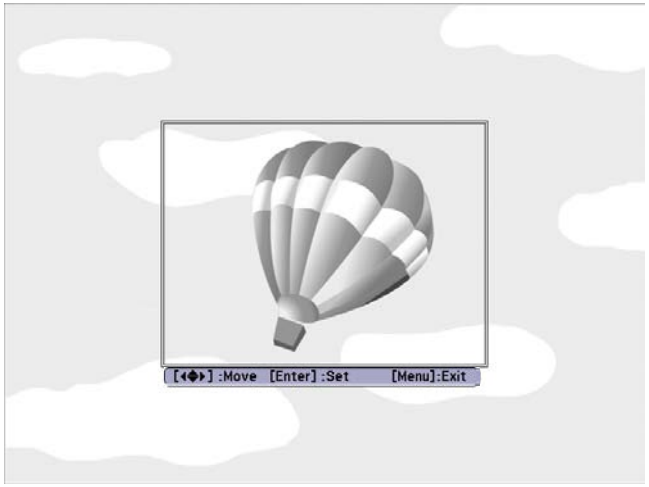

Using the Remote Control

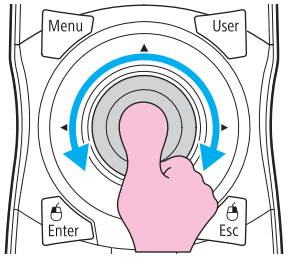

Using the Control panel

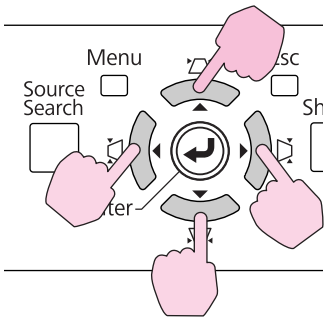

Your User's Logo image can have a resolution up to 400 × 300.

5 When "Select this image?" is displayed, select "Yes".

6 Select the zoom factor from the zoom setting screen.

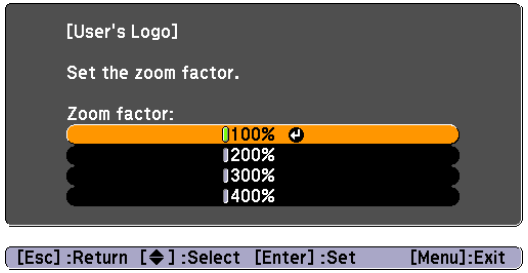

400% is only displayed when you're using the PowerLite Pro Z8000WUNL.

7 When the message "Save this image as the User's Logo?" is displayed, select "Yes".

The image is saved. After the image has been saved, the message "Completed. " is displayed.

Saving the user's logo may take approximately 15 seconds. Do not use the projector or any connected equipment while it is saving, otherwise malfunctions may occur.

Making a WPS (Wi-Fi Protected Setup) Connection with a Wireless LAN Access Point (PowerLite Pro Z8050WNL only)

There are two methods for setting WPS.

- Push Button Method

  SSID and security are set automatically when the [Enter] button is pressed on the projector's control panel and the dedicated button on the access point equipment. This method is recommended when the projector and access point are close together.

- PIN Code Method

  SSID and security are set automatically by inputting an 8-digit code that was assigned to the projector from the computer to the access point in advance. Make connection settings between the computer and the access point in advance. For details on how to make this connection, refer to the manual provided with the access point. This method is recommended when the projector is mounted on the ceiling.

Connection Setup Method

Procedure

1. **During projection, press the [Menu] button and select Network - "Network Configuration" from the configuration menu.**

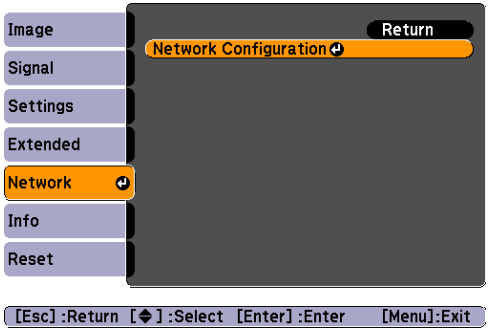

The Network Configuration screen is displayed.

2 **From "Wireless LAN" select "To Setup Wizard".**

The following screen is displayed.

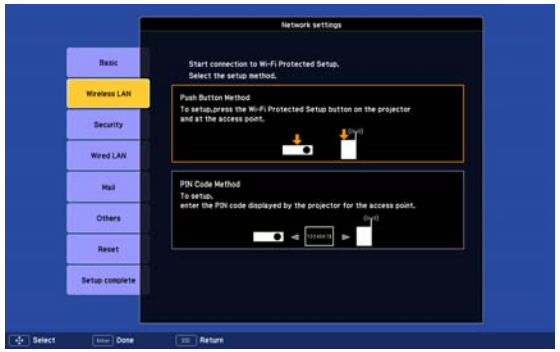

When connecting using the Push Button Method, follow the steps given below.

Go to "Making a connection using the PIN Code Method" when connecting using the "PIN Code Method". ☛ p.135

Making a Connection Using the Push Button Method

Procedure

1 **Select "Push Button Method".**

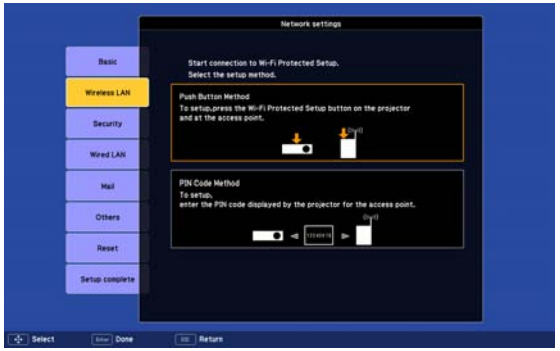

The Push Button Method screen is displayed.

2 **Press the [Enter] button on the projector's control panel when prompted by the screen.**

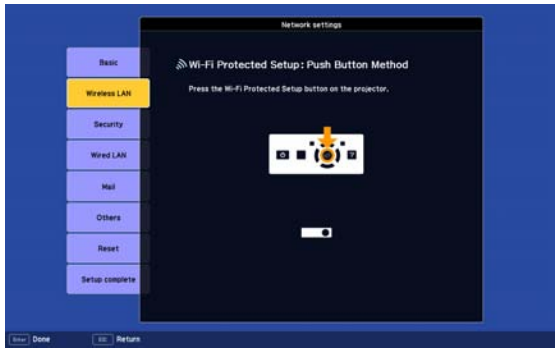

Then, the Push Button Method screen is displayed.

3 **Press the button on the access point when prompted by the screen.**

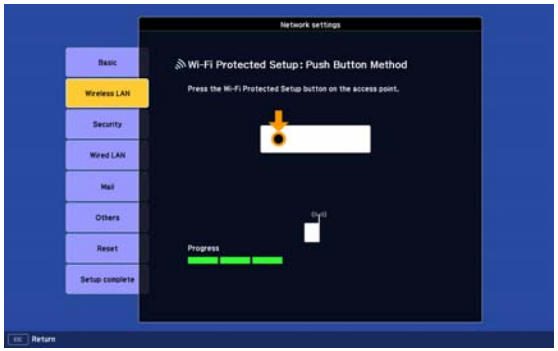

This completes the setup.

4 **Press the [Enter] button or the [Esc] button.**

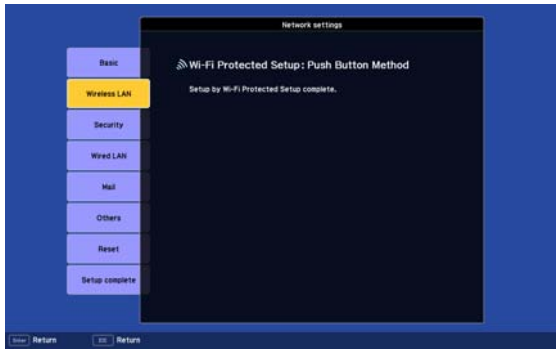

The **Wireless LAN** menu screen is displayed.

5 **Select "Yes" from "Setup complete".**

This completes the setup of the connection between the projector and the access point. Press the [Menu] button to close the configuration menu.

Making a connection using the PIN Code Method

Before you can make a connection using the "PIN Code Method", a connection must have already been setup between the computer and the access point.

Procedure

1 Select "PIN Code Method".

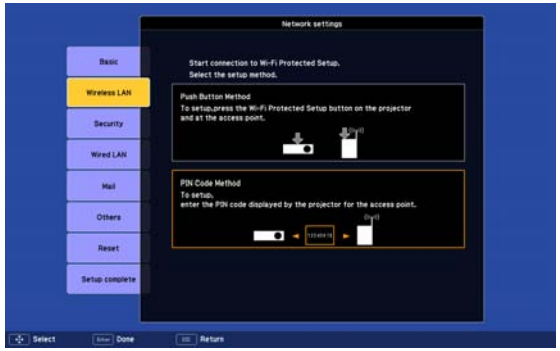

The PIN Code Method screen is displayed.

2 Enter the PIN code displayed on the "PIN Code Method" screen from the computer to the access point, and then select "Start Setup".

The progress is displayed.

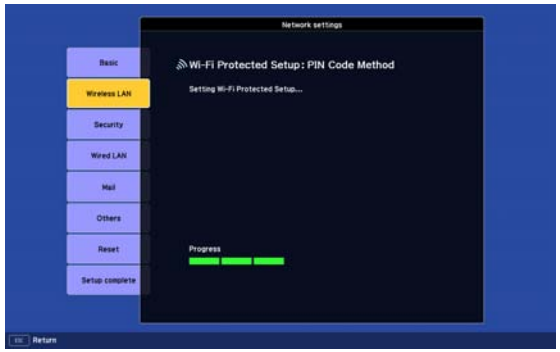

3 The message "Setup by Wi-Fi Protected Setup complete." is displayed. Press the [Enter] button or the [Esc] button.

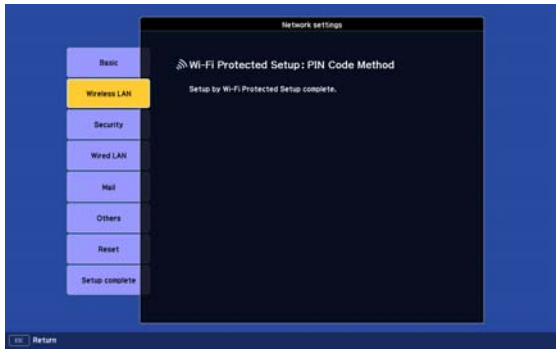

The **Wireless LAN** menu screen is displayed.

4 Select "Yes" from "Setup complete".

This completes the setup of the connection between the projector and the access point. Press the [Menu] button to close the configuration menu.

Connecting a LAN Cable

Connect with a 100BASE-TX or 10BASE-T LAN cable (not included).

The illustration in this section shows the PowerLite Pro Z8000WUNL. If you are using the PowerLite Pro Z8050WNL, the projector and interfaces are slightly different.

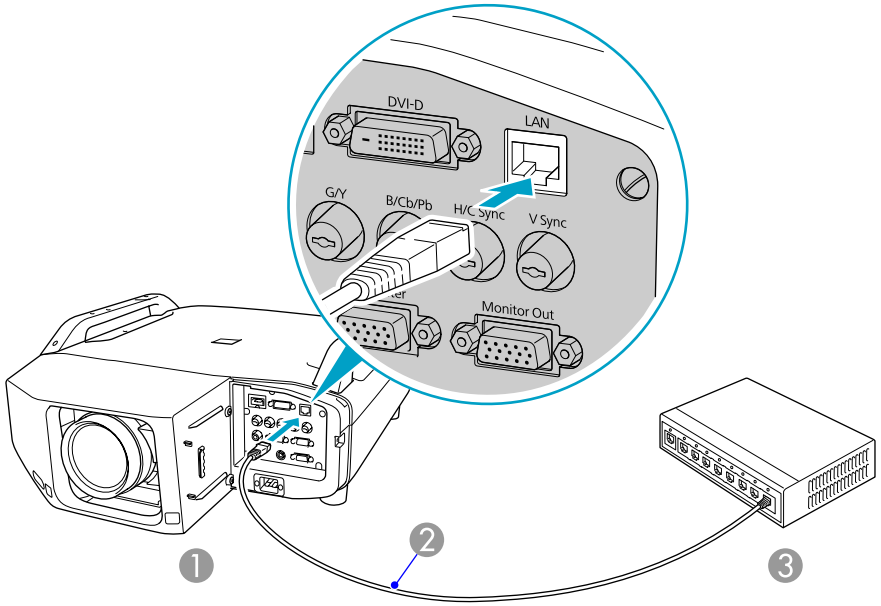

1 To LAN port
2 LAN cable (commercially available)
3 To LAN port

Caution:

To prevent malfunctions, use a category 5 shielded LAN cable.

Connecting to an external monitor

Analog RGB images input through the Computer or BNC ports can be displayed on an external monitor and the screen at the same time. You can check projected images on an external monitor when giving presentations even if you cannot see the screen. Connect using the cable supplied with the external monitor.

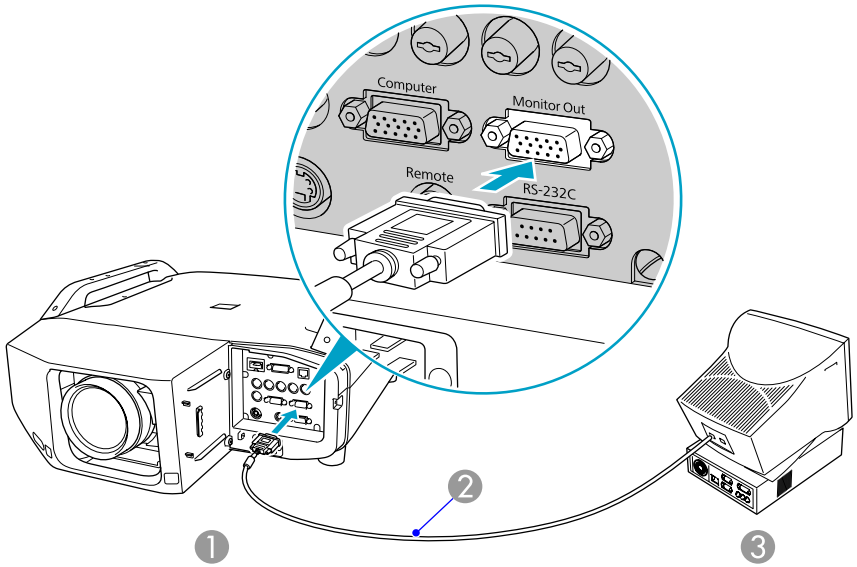

1 To Monitor Out port
2 Cable supplied with monitor
3 To Monitor port

Component video signals cannot be output to an external monitor. Additionally, signals input through any ports other than the Computer or BNC ports cannot be output to an external monitor.

Setting gauges such as Keystone, the configuration menu, or Help screens are not output to the external monitor.

Removing

Caution:

- *Only remove the lens unit when necessary. If dust or dirt enter the projector, projection quality deteriorates and it could cause a malfunction.*
- *Try not to touch the lens with your hand or fingers. If fingerprints or oils are left on the surface of the lens, projection quality deteriorates.*
- *Before replacing the lens unit, use the lens shift function to horizontally and vertically center the lens.*

Procedure

1 Remove the interface cover.

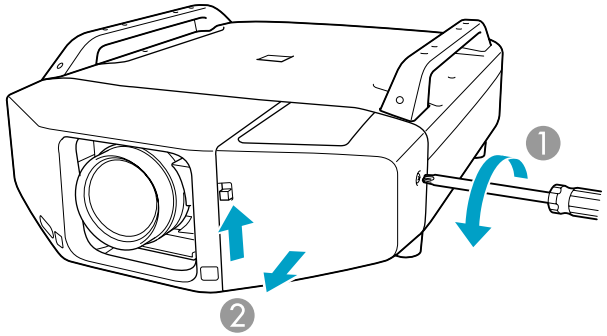

1 Loosen the screw.
2 While pulling up the interface cover open switch, pull the interface cover straight out.

2 Remove the front cover.

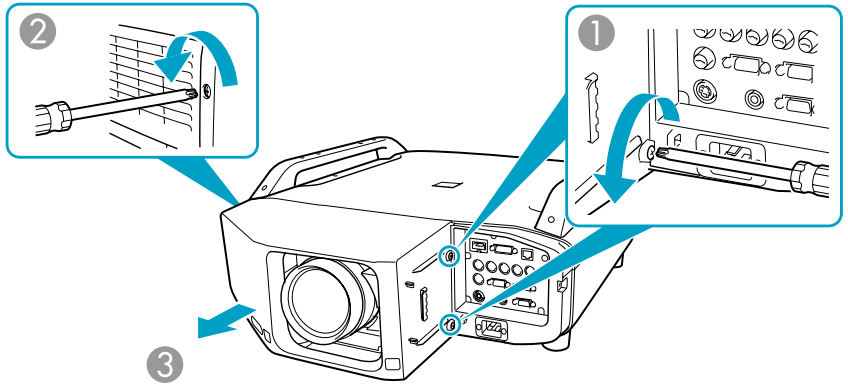

1 Loosen the two screws.
2 Loosen the screw.
3 Pull the cover straight out.

3 **Pinch the lock lever of the lens unit and turn it counterclockwise.**

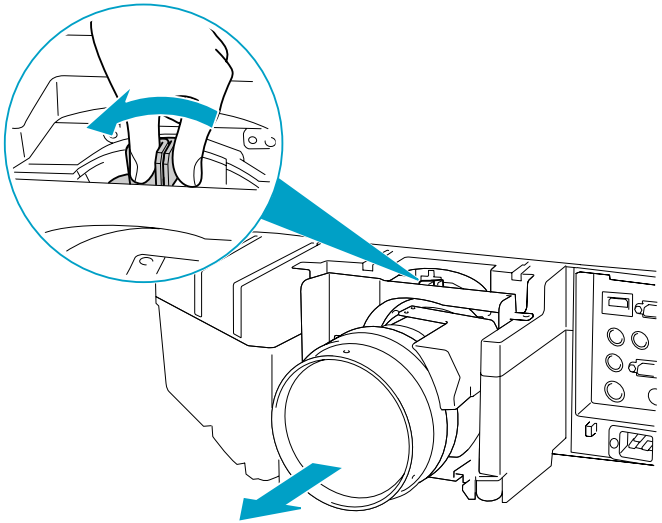

4 **Once it is released, pull the lens unit straight out.**

Attaching

Caution:

Do not remove or attach the lens unit when the projector's lens area is facing up (for projecting directly up). Dust or dirt could enter the projector.

Procedure

1 **Insert the lens unit straight into the lens insertion section with the white circle on the lens on top.**

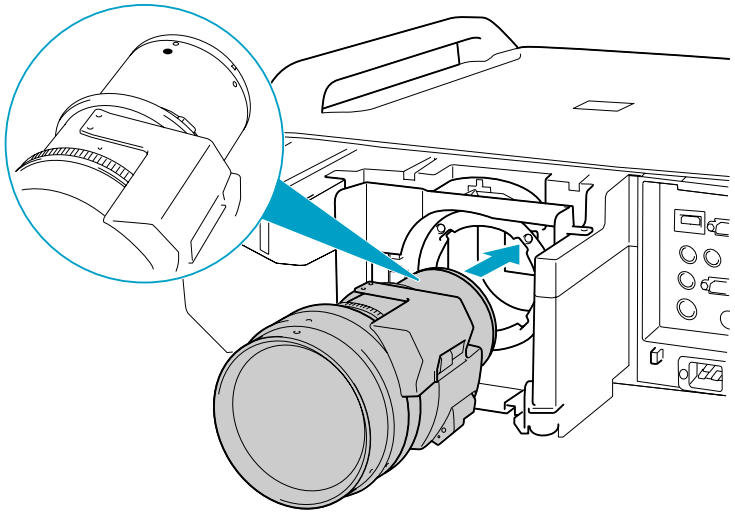

2 While holding the lens unit firmly, turn the lock lever clockwise until it is locked. Check that the lens cannot be detached.

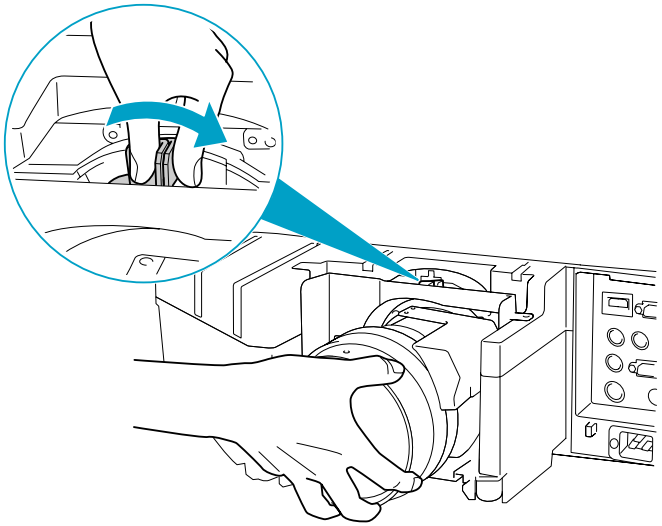

3 Replace the front cover.

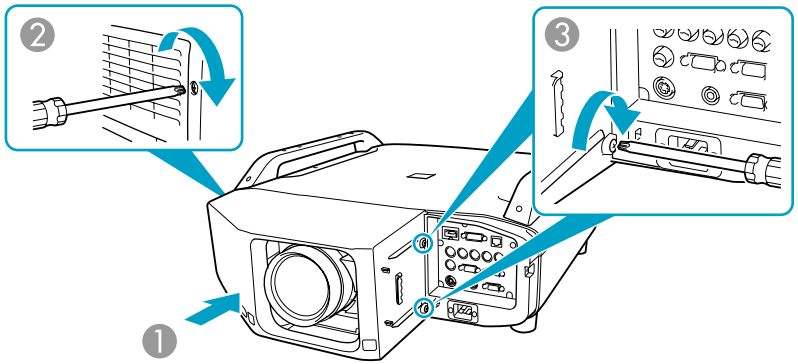

1 Install the cover along the guide.
2 Tighten the screw.
3 Tighten the two screws.

4 Replace the interface cover.

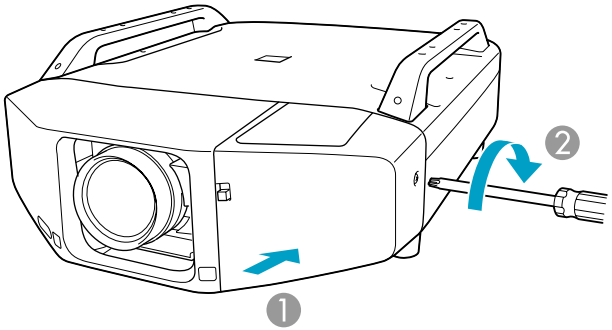

1 Install the cover along the guide.
2 Tighten the screws.

Caution:

- *Install the front cover before using the projector.*
- *Store the projector with the lens unit installed.*
  If the projector is stored without the lens unit, dust and dirt may get inside the projector and cause malfunctions or lower the quality of projection.

Reading Problem Mail Notification Function

When the **Mail Notification** function is set to **On** and a problem/warning occurs in the projector, the following e-mail is sent.

Subject: EPSON Projector
Line 1: The name of the projector where the problem has occurred
Line 2: The IP address set for the projector where the problem has occurred.
Line 3 and on: Details of the problem

The details of the problem are listed line by line. The following table shows the details that are given in the message for each item. To deal with problems/warnings, see "Reading the Indicators"

The details of the problem are listed line by line. The following table shows the details that are given in the message for each item. To deal with problems/warnings, see "Reading the Indicators" ☛ p.102

Message	Cause
Auto Iris Error	Auto Iris Error
Cinema filter error	Cinema filter error
Cinema Filter Warning	Cinema Filter Warning The projector can still be used but the cinema filter does not work.
Clean Air Filter	Air Filter Notice
Fan related error	Fan Error
High-speed cooling in progress	High Temp Warning
Internal error	Internal Error
Internal temperature error	High Temp Error (Overheating)
Lamp out	Lamp Error (both lamps 1/2)
Lamp replacement notification (1) Lamp replacement notification (2)	Replace Lamp (1) Indicates lamp 1, and (2) indicates lamp 2. The indicated lamp is due for replacement.
Lamp timer failure	Lamp Failure (both lamp 1/2)
Lamp Warning (1) Lamp Warning (2)	Lamp Warning (1) indicates lamp 1, and (2) indicates lamp 2. The indicated lamp is out.
Low Air Flow	Low Air Flow
Low Air Flow Error	Filter Airflow Error
No Air Filter	No Air Filter/Air Flow Sensor Err.
No-signal	No Signal No Signal is input to the projector. Check the connection status or check that the power for the signal source is turned on.
Peltier Device error	Cooling system error (Peltier element)
Power Err. (Ballast)	Power Err. (Ballast)
Power Warning. (Ballast) (1) Power Warning. (Ballast) (2)	Supply System Warning (Ballast) (1) indicates the lamp 1, and (2) indicates the lamp 2. The informed lamp is out.
Pump Error	Cooling system error (pump)
Sensor error	Sensor Error
Shutter Error	Shutter Error
Shutter Warning	Shutter Warning Though this unit still can be used, the electric shutter does not work.

A (+) or (-) appears at the start of the message.

(+): A projector problem has occurred

(-): A projector problem has been dealt with

Command List

When the power ON command is transmitted to the projector, the power turns on and it enters warm-up mode. When the projector's power has turned on, a colon ":" (3Ah) is returned.

When a command is input, the projector executes the command and returns a ":", and then accepts the next command.

If the command being processed terminates abnormally, an error message is output and a ":" is returned.

Item			Command
Power ON/OFF	On		PWR ON
	Off		PWR OFF
Signal selection	Computer	Auto	SOURCE 1F
		RGB	SOURCE 11
		Component	SOURCE 14
	BNC	Auto	SOURCE BF
		RGB	SOURCE B1
		Component	SOURCE B4
	HDMI		SOURCE A0
	DVI-D		SOURCE 30
	Video		SOURCE 45
	S-Video		SOURCE 42
Shutter On/Off	On		MUTE ON
	Off		MUTE OFF

Add a Carriage Return (CR) code (0Dh) to the end of each command and transmit.

Cable Layouts

Serial Connection

- Connector shape: D-Sub 9-pin (male)
- Projector input port name: RS-232C

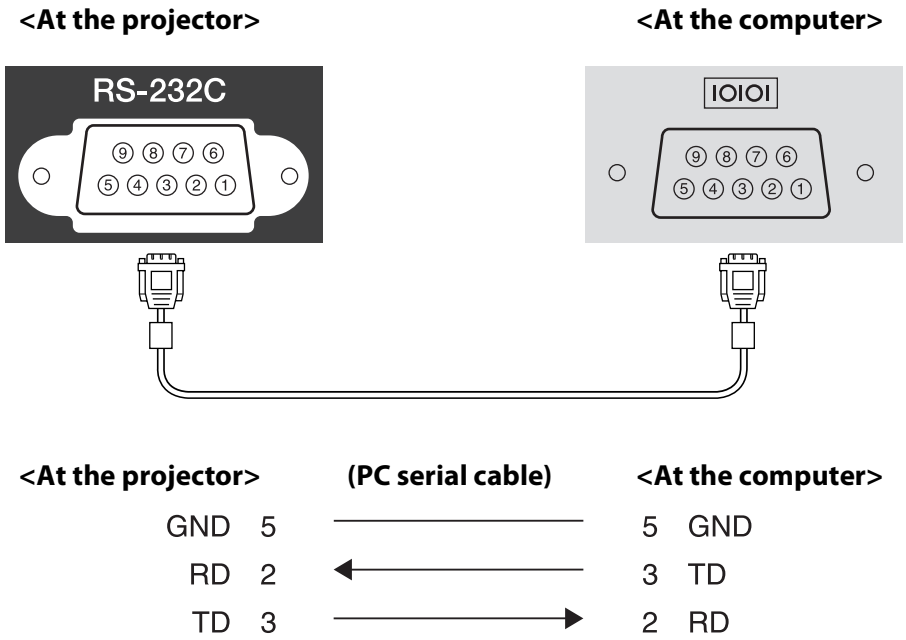

Signal Name	Function
GND	Signal wire ground
TD	Transmit data
RD	Receive data

Communications protocol

- Default baud rate setting: 9600 bps
- Data length: 8 bit
- Parity: None
- Stop-bit: 1 bit
- Flow control: None

About PJLink

PJLink Class1 was established by the JBMIA (Japan Business Machine and Information System Industries Association) as a standard protocol for controlling network-compatible projector's as part of their efforts to standardize projector control protocols.

The projector complies with the PJLink Class1 standard established by the JBMIA.

It complies with all commands except for the following commands defined by PJLink Class1, and agreement was confirmed by the PJLink standard adaptability verification.

URL: http://pjlink.jbmia.or.jp/

URL: http://pjlink.jbmia.or.jp/english/

- **Non-compatible commands**

Function	PJLink Command
Image muting set	**AVMT 11**

- Input names defined by **PJLink and corresponding projector sources**

Source	PJLink Command
Computer	**INPT 11**
BNC	**INPT 13**
Video	**INPT 23**
S-Video	**INPT 22**
DVI-D	**INPT 31**
HDMI	**INPT 32**

- Manufacturer name displayed for "Manufacture name information query"

EPSON

- Model name displayed for "Product name information query"

EB-Z8000WU/PowerLite Pro Z8000WU

EB-Z8050W/PowerLite Pro Z8050W

Supported Monitor Displays for PowerLite Pro Z8000WUNL

Computer signals (analog RGB)

Signal	Refresh Rate (Hz)	Resolution	Aspect Mode				
			Normal	16:9	Full	Zoom	Native
VGA	60/72/75/85/iMac*1	640x480	1600x1200	1920x1080	1920x1200	1920x1200	640x480
SVGA	56/60/72/75/85/iMac*1	800x600	1600x1200	1920x1080	1920x1200	1920x1200	800x600
XGA	60/70/75/85/iMac*1	1024x768	1600x1200	1920x1080	1920x1200	1920x1200	1024x768
WXGA	60/75/85	1280x768	1920x1152	1920x1080	1920x1200	1920x1152	1280x768
	60	1360x768	1920x1084	1920x1080	1920x1200	1920x1084	1360x768
	60/75/85	1280x800	1920x1200	1920x1080	1920x1200	1920x1200	1280x800
WXGA+	60/75/85	1440x900	1920x1200	1920x1080	1920x1200	1920x1200	1440x900
WSXGA+	60	1680x1050	1920x1200	1920x1080	1920x1200	1920x1200	1680x1050
SXGA	70/75/85	1152x864	1600x1200	1920x1080	1920x1200	1920x1200	1152x864
	60/75/85	1280x1024	1500x1200	1920x1080	1920x1200	1920x1200	1280x1024
	60/75/85	1280x960	1600x1200	1920x1080	1920x1200	1920x1200	1280x960
SXGA+	60*2/75/85	1400x1050	1600x1200	1920x1080	1920x1200	1920x1200	1400x1050
UXGA	60	1600x1200	1600x1200	Non-compatible	1920x1200	1920x1200	1600x1200
WUXGA*3	60	1920x1200	1920x1200	1920x1080	1920x1200	1920x1200	1920x1200
MAC13″	67	640x480	1600x1200	1920x1080	1920x1200	1920x1200	640x480
MAC16″	75	832x624	1600x1200	1920x1080	1920x1200	1920x1200	832x624

Signal	Refresh Rate (Hz)	Resolution	Aspect Mode				
			Normal	16:9	Full	Zoom	Native
MAC19"	75	1024x768	1600x1200	1920x1080	1920x1200	1920x1200	1024x768
	60	1024x768	1600x1200	1920x1080	1920x1200	1920x1200	1024x768
MAC21"	75	1152x870	1588x1200	1920x1080	1920x1200	1920x1200	1152x870

*1 Connection is disabled if the equipment does not have a VGA output port.

*2 Only compatible when Normal is selected as the Resolution from the configuration menu.

*3 Only compatible when VESA CVT-RB(Reduced Blanking) signal is input.

Even when signals other than those mentioned above are input, it is likely that the image can be projected. However, not all functions may be supported.

Component Video

Signal	Refresh Rate (Hz)	Resolution	Aspect Mode				
			Normal	16:9	Full	Zoom	Native
SDTV(480i)	60	—	1600x1200	1920x1080	1920x1200	1920x1200	640x480
SDTV(576i)	50	—	1600x1200	1920x1080	1920x1200	1920x1200	768x576
SDTV(480p)	60	—	1600x1200	1920x1080	1920x1200	1920x1200	640x480
SDTV(576p)	50	—	1600x1200	1920x1080	1920x1200	1920x1200	768x576
HDTV(720p)	50/60	—	1920x1080	1920x1080	1920x1200	1920x1080	1280x720
HDTV(1080i)	50/60	—	1920x1080	1920x1080	1920x1200	1920x1080	1920x1080
HDTV(1080p)	50/60	—	1920x1080	1920x1080	1920x1200	1920x1080	1920x1080

Composite Video/S-Video

Signal	Refresh Rate (Hz)	Resolution	Aspect Mode				
			Normal	16:9	Full	Zoom	Native
TV(NTSC)	60	—	1600x1200	1920x1080	1920x1200	1920x1200	640x480
TV(PAL,SECAM)	50	—	1600x1200	1920x1080	1920x1200	1920x1200	768x576

Input signal from the HDMI/DVI-D input port

Signal	Refresh Rate (Hz)	Resolution	Aspect Mode			
			16:9	Full	Zoom	Native
VGA	60	640x480	1920x1080	1920x1200	1920x1200	640x480
SVGA	60	800x600	1920x1080	1920x1200	1920x1200	800x600
XGA	60	1024x768	1920x1080	1920x1200	1920x1200	1024x768
WXGA	60	1280x800	1920x1080	1920x1200	1920x1200	1280x800
SXGA	60	1280x960	1920x1080	1920x1200	1920x1200	1280x960
	60	1280x1024	1920x1080	1920x1200	1920x1200	1280x1024
SXGA+	60	1400x1050	1920x1080	1920x1200	1920x1200	1400x1050
UXGA	60	1600x1200	Non-compatible	1920x1200	1920x1200	1600x1200
WUXGA*	60	1920x1200	1920x1080	1920x1200	1920x1200	1920x1200
SDTV(480i)	60	—	1920x1080	1920x1200	1920x1200	640x480
SDTV(480p)	60	—	1920x1080	1920x1200	1920x1200	640x480
SDTV(576i)	50	—	1920x1080	1920x1200	1920x1200	768x576
SDTV(576p)	50	—	1920x1080	1920x1200	1920x1200	768x576
HDTV(720p)	50/60	—	1920x1080	1920x1200	1920x1080	1280x720
HDTV(1080i)	50/60	—	1920x1080	1920x1200	1920x1080	1920x1080
HDTV(1080p)	24/30/50/60	—	1920x1080	1920x1200	1920x1080	1920x1080

* Only compatible when VESA CVT-RB(Reduced Blanking) signal is input.

Supported Monitor Displays for PowerLite Pro Z8050WNL

Computer signals (analog RGB)

Signal	Refresh Rate (Hz)	Resolution	Aspect Mode				
			Normal	16:9	Full	Zoom	Native
VGAEGA	70	640x350	1280x700	1280x720	1280x800	1280x700	640x350
VGA	60/72/75/85/iMac*1	640x480	1066x800	1280x720	1280x800	1280x800	640x480
SVGA	56/60/72/75/85/iMac*1	800x600	1066x800	1280x720	1280x800	1280x800	800x600
XGA	60/70/75/85/iMac*1	1024x768	1066x800	1280x720	1280x800	1280x800	1024x768
WXGA	60/75/85	1280x768	1280x768	1280x720	1280x800	1280x768	1280x768
	60	1360x768	1280x722	1280x720	1280x800	1280x722	1280x800
	60/75/85	1280x800	1280x800	1280x720	1280x800	1280x800	1280x800
WXGA+	60/75/85	1440x900	1280x800	1280x720	1280x800	1280x800	1280x800
WSXGA+	60	1680x1050	1280x800	1280x720	1280x800	1280x800	1280x800
SXGA	70/75/85	1152x864	1066x800	1280x720	1280x800	1280x800	1280x800
	60/75/85	1280x1024	1000x800	1280x720	1280x800	1280x800	1280x800
	60/75/85	1280x960	1066x800	1280x720	1280x800	1280x800	1280x800
SXGA+	60*2/75/85	1400x1050	1066x800	1280x720	1280x800	1280x800	1280x800
UXGA	60	1600x1200	1066x800	1280x720	1280x800	1280x800	1280x800
WUXGA*3	60	1920x1200	1280x800	1280x720	1280x800	1280x800	1280x800
MAC13”	67	640x480	1066x800	1280x720	1280x800	1280x800	640x480
MAC16”	75	832x624	1066x800	1280x720	1280x800	1280x800	832x624
MAC19”	75	1024x768	1066x800	1280x720	1280x800	1280x800	1024x768
	60	1024x768	1066x800	1280x720	1280x800	1280x800	1024x768
MAC21”	75	1152x870	1059x800	1280x720	1280x800	1280x800	1152x800

*1 Connection is disabled if the equipment does not have a VGA output port.

*2 Only compatible when Normal is selected as the Resolution from the configuration menu.

*3 Only compatible when VESA CVT-RB(Reduced Blanking) signal is input.

Even when signals other than those mentioned above are input, it is likely that the image can be projected. However, not all functions may be supported.

Component Video

Signal	Refresh Rate (Hz)	Resolution	Aspect Mode				
			Normal	16:9	Full	Zoom	Native
SDTV(480i)	60	—	1066x800	1280x720	1280x800	1280x800	640x480
SDTV(576i)	50	—	1066x800	1280x720	1280x800	1280x800	768x576
SDTV(480p)	60	—	1066x800	1280x720	1280x800	1280x800	640x480
SDTV(576p)	50	—	1066x800	1280x720	1280x800	1280x800	768x576
HDTV(720p)	50/60	—	1280x720	1280x720	1280x800	1280x720	1280x720
HDTV(1080i)	50/60	—	1280x720	1280x720	1280x800	1280x720	1280x800
HDTV(1080p)	50/60	—	1280x720	1280x720	1280x800	1280x720	1280x800

Composite Video/S-Video

Signal	Refresh Rate (Hz)	Resolution	Aspect Mode				
			Normal	16:9	Full	Zoom	Native
TV(NTSC)	60	—	1066x800	1280x720	1280x800	1280x800	640x480
TV(PAL,SECAM)	50	—	1066x800	1280x720	1280x800	1280x800	768x576

Input signal from the HDMI/DVI-D input port

Signal	Refresh Rate (Hz)	Resolution	Aspect Mode			
			16:9	Full	Zoom	Native
VGA	60	640x480	1280x720	1280x800	1280x800	640x480
SVGA	60	800x600	1280x720	1280x800	1280x800	800x600
XGA	60	1024x768	1280x720	1280x800	1280x800	1024x768
WXGA	60	1280x800	1280x720	1280x800	1280x800	1280x800
SXGA	60	1280x960	1280x720	1280x800	1280x800	1280x800
	60	1280x1024	1280x720	1280x800	1280x800	1280x800
SXGA+	60	1400x1050	1280x720	1280x800	1280x800	1280x800
UXGA	60	1600x1200	1280x720	1280x800	1280x800	1280x800
WUXGA*	60	1920x1200	1280x720	1280x800	1280x800	1280x800
SDTV(480i)	60	720x480	1280x720	1280x800	1280x800	640x480
SDTV(480p)	60	720x480	1280x720	1280x800	1280x800	640x480
SDTV(576i)	50	720x576	1280x720	1280x800	1280x800	768x576
SDTV(576p)	50	720x576	1280x720	1280x800	1280x800	768x576
HDTV(720p)	50/60	1280x720	1280x720	1280x800	1280x720	1280x720
HDTV(1080i)	50/60	1920x1080	1280x720	1280x800	1280x720	1280x800
HDTV(1080p)	24/30/50/60	1920x1080	1280x720	1280x800	1280x720	1280x800

* Only compatible when VESA CVT-RB(Reduced Blanking) signal is input.

Projector General Specifications

Product name		PowerLite Pro Z8000WUNL	PowerLite Pro Z8050WNL
Dimensions		21.0 inches (534 mm) (W) × 8.9 inches (225 mm) (H) × 28.9 inches (734 mm) (D) (including feet)	
Panel size		0.94" Wide	0.95" Wide
Display method		Polysilicon TFT active matrix	
Resolution		2,304,000 pixels WUXGA (1920 (W) × 1200 (H) dots) × 3	1,024,000 pixels WXGA (1280 (W) × 800 (H) dots) × 3
Light output (brightness)		Normal mode: White light output 6000 lumens (ISO 21118 standard), Color light output 6000 lumens ECO mode: Light output 4800 lumens	Normal mode: White light output 7000 lumens (ISO 21118 standard), Color light output 7000 lumens ECO mode: Light output 5600 lumens
Focus adjustment		Powered	
Zoom adjustment*1		Powered (1-1.6)	
Lens shift*1		Powered (Vertical direction: Maximum approx. 70%, Horizontal direction: Maximum approx. 20%)	
Lamp		UHE lamp, 330 W Two-lamps	
Lamp life*2		Up to about 2500 hours (Normal mode), Up to about 3500 hours (ECO mode)	
Noise level		38 dB (Normal mode), 32 dB (ECO mode)	
Power supply		100-240V AC ±10%, 50/60Hz 10.7 to 4.5A	
Power consumption	100 to 120 V area	Operating: 942W (Normal mode), 776W (ECO mode) Standby: 11.2W (Communication On), 0.3W (Communication Off)	Operating: 938W (Normal mode), 763W (ECO mode) Standby: 10.2W (Communication On), 0.3W (Communication Off)
	200 to 240 V area	Operating: 877W (Normal mode), 734W (ECO mode) Standby: 13.1W (Communication On), 0.5W (Communication Off)	Operating: 872W (Normal mode), 720W (ECO mode) Standby: 12.0W (Communication On), 0.5W (Communication Off)

Operating altitude	0 to 10000 ft (0 to 3048 m) (Set High Altitude Mode to **On** when using the projector above 4900 ft (1500 m).)
Operating temperature	32°F (0°C) to 113°F (45°C)*3 (No condensation)
Storage temperature	14°F (-10°C) to 140°F (60°C) (No condensation)
Weight	Approx. 44.5 lb (20.2 kg) (without lens)
Safety and Approvals	United States: FCC 47CFR Part 15B Class B (DoC), UL60950-1 2nd edition (cTUVus Mark) Canada: ICES-003 Class B, CSA C22.2 No. 60950-1 CE Marking: EMC Directive (2004/108/EC), IEC 60950-1 2nd edition (CE Marking)

*1 The specifications are when a standard lens is attached. When an optional lens is attached, check the *User's Guide* supplied with the optional lenses.

*2 Turn off this product when not in use to prolong the life of the projector. Lamp life will vary depending upon mode selected, environmental conditions, and usage. Brightness decreases over time.

*3 The operating temperature is 32°F (0°C) to 104°F (40°C) when "Power Consumption" is set to "Normal" and "High Altitude Mode" is set to "On" at an altitude of 4900 ft (1500 m) to 10000 ft (3048 m).

Connectors

Computer Input Port	**1**	Mini D-Sub15-pin (female) blue
BNC Input Port	**1**	5BNC (female)
HDMI Input Port*	**1**	HDMI HDCP compatible, CEC signal incompatible
DVI-D Input Port*	**1**	DVI-D 24pin Single Link HDCP compatible
Video input port	**1**	1BNC (female)
S-Video input port	**1**	Mini DIN 4-pin
Monitor Out port	**1**	Mini D-Sub15-pin (female) black
LAN Port	**1**	RJ-45
Wireless LAN Port (PowerLite Pro 8050WNL only)	**1**	USB connector (Type A) only for the Wireless 802.11a/b/g Module
RS-232C Port	**1**	Mini D-Sub 9-pin (male)
Remote port	**1**	Stereo mini jack

* The projector can be connected to and project images from HDMI and DVI-D compatible equipment. However, images input from some equipment may not be projected.

Pixelworks DNX™ ICs are used in this projector.

Angle of tilt

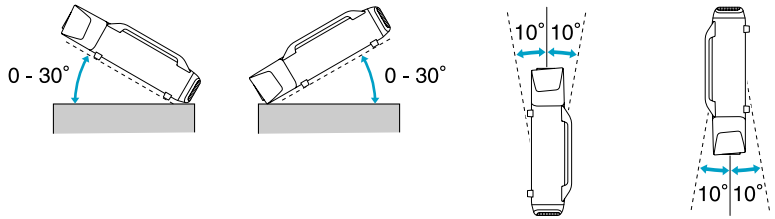

Using the projector at angles not shown in the illustrations above may damage it or cause an accident.

Software System Requirements

The software supplied with the projector runs on computers that meet the following requirements.

	EasyMP Network Projection	EasyMP Monitor
OS	Windows series (32-bit versions only) • Windows 2000 (Service Pack 4) • Windows XP • Windows XP (Service Pack 1 or later) • Windows Vista • Windows Vista (Service Pack 1 or later) • Windows 7 Mac OS X series • Mac OS X 10.3.x • Mac OS X 10.4.x • Mac OS X 10.5.1 or later* • Mac OS X 10.6.x Recommended: Mac OS X 10.3.9/10.4.11/10.5.5 * Operation is not guaranteed in Mac OS X 10.5.0 because the Firewall settings are not set correctly when the version is updated.	Windows 98 Second Edition SP1 Windows Me Windows NT4.0 SP6 Windows 2000 Professional SP4 The following 32-bit operating systems: • Windows XP Home Edition SP2/SP3 • Windows XP Professional SP2/SP3 • Windows Vista (All editions except Starter Edition) • Windows Vista SP1/SP2 (All editions except Starter Edition) • Windows 7 (All editions except Starter Edition) Internet Explorer Ver. 5.0 or later must be installed. Macintosh computers cannot be used.
CPU	Mobile Pentium III 1.2GHz or more Power PC G3 900MHz or more Recommended: Pentium M1.6GHz or more CoreDuo 1.5GHz or more	Pentium MMX 166MHz or more Recommended: Pentium II 233MHz or more
Amount of Memory	256MB or more (Recommended: 512MB or more)	64MB or more
Hard Disk Free space	20MB or more	50MB or more
Display	Resolution greater than XGA (1024x768) Display color of approx. 32000 colors more than 16 bit colors	Resolution greater than SVGA (800x600) Display color in 32 bit full-color or greater Display Color

Appearance

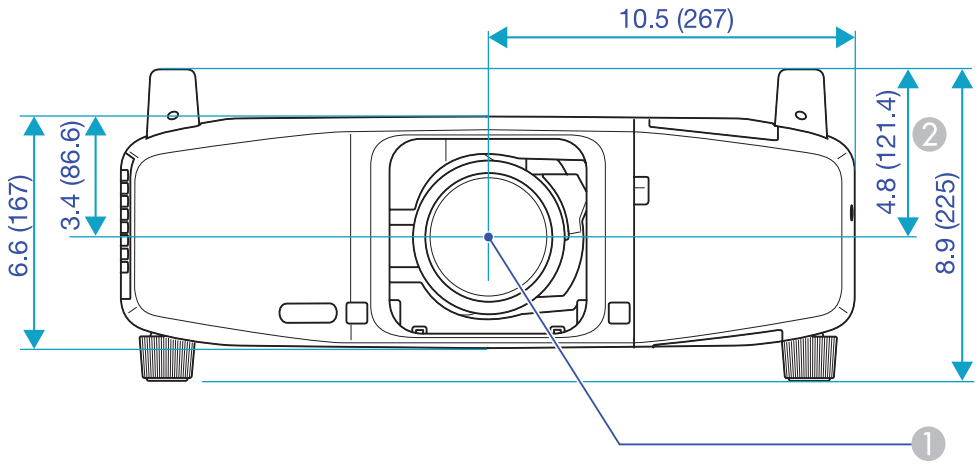

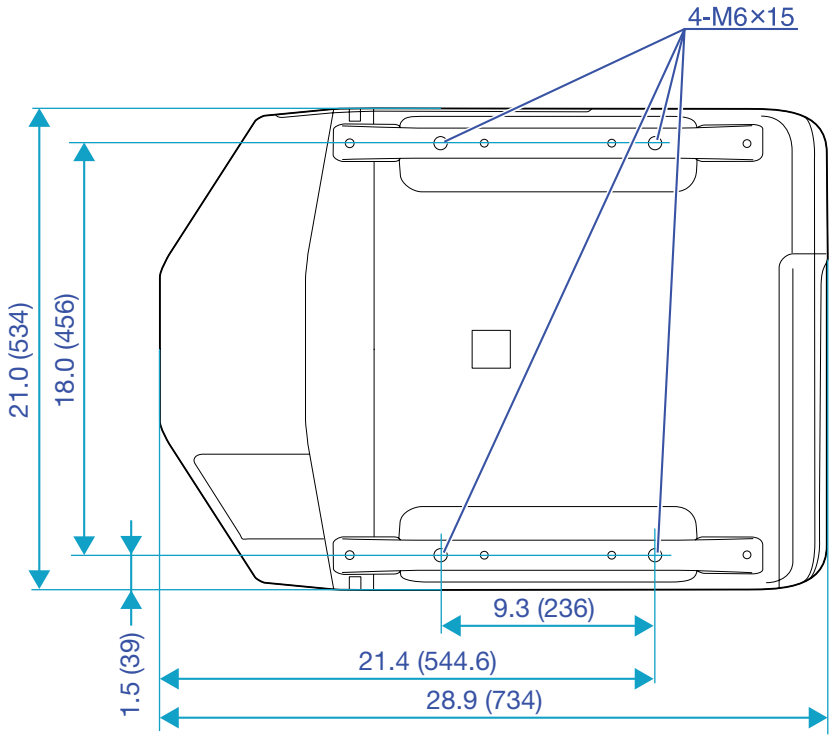

1 Center of lens

2 Distance from center of lens to suspension bracket fixing point

Units: inches (mm)

Glossary

This section explains easily terms that are used with the projector and difficult terms that are not explained in the text of this guide. For details, refer to other commercially available publications.

AMX Device Discovery	AMX Device Discovery is a technology developed by AMX to facilitate AMX control systems for easy operation of the target equipment. Epson has implemented this protocol technology, and has provided a setting to enable the protocol function (ON). See the AMX Web site (www.amx.com) for more details.
DHCP	An abbreviation of Dynamic Host Configuration Protocol, this protocol automatically assigns an IP Address to equipment connected to a Network.
HDCP	HDCP is an abbreviation for High-bandwidth Digital Content Protection. It is used to prevent illegal copying and protect copyrights by encrypting digital signals sent over DVI and HDMI ports. Digital images protected by HDCP technology can be projected with this projector because the projector's DVI-D and HDMI input ports are compatible with HDCP. However, the projector may not be able to project images protected with updated or revised versions of HDCP encryption.
HDTV	An abbreviation for High-Definition Television that refers to high-definition systems which satisfy the following conditions. • Vertical resolution of 720p or 1080i or greater (p = Progressive, i = Interlace) • Screen Aspect Ratio of 16:9 • Dolby Digital audio reception and playback (or output)
IP Address	A number to identify a computer connected to a Network.
S-Video	A Video signal which has the luminance component and color component separated to provide better image quality. Refers to images that consist of two independent signals: Y (luminance signal) and C (color signal).
SDTV	An abbreviation for Standard Definition Television that refers to standard television systems which do not satisfy the conditions for HDTV High-Definition Television.
SNMP	An abbreviation for Simple Network Management Protocol, which is the protocol for monitoring and controlling devices such as routers and computers connected to a TCP/IP Network.
sRGB	An international standard for color intervals that was formulated so that colors that are reproduced by video equipment can be handled easily by computer operating systems (OS) and the Internet. If the connected source has an sRGB mode, set both the projector and the connected signal source to sRGB.
SVGA	A type of video signal with a resolution of 800 (horizontal) × 600 (vertical) dots that is used by IBM PC/AT-compatible computers.
SXGA	A type of video signal with a resolution of 1,280 (horizontal) × 1,024 (vertical) dots that is used by IBM PC/AT-compatible computers.

VGA	A type of video signal with a resolution of 640 (horizontal) × 480 (vertical) dots that is used by IBM PC/AT-compatible computers.
XGA	A type of video signal with a resolution of 1,024 (horizontal) × 768 (vertical) dots that is used by IBM PC/AT-compatible computers.
Aspect Ratio **(Aspect Ratio)**	The ratio between an image's length and its height. HDTV images have an aspect ratio of 16:9 and appear elongated. The aspect ratio for standard images is 4:3.
Interlace	A method of image scanning whereby the image data is divided into fine horizontal lines that are displayed in sequence starting from left to right and then from top to bottom. The even-numbered lines and odd-numbered lines are displayed alternately.
Gateway address **(Gateway Address)**	This is a server (router) for communicating across a network (subnet) divided according to subnet masks.
Contrast	The relative brightness of the light and dark areas of an image can be increased or decreased to make text and graphics stand out more clearly, or to make them appear softer. Adjusting this particular property of an image is called Contrast adjustment.
Component Video	A Video signal which has the luminance component and color component separated to provide better image quality. Refers to images that consist of three independent signals: Y (luminance signal), Pb and Pr (color difference signals).
Composite video	Video signals that have the video brightness signals and color signals mixed together. The type of signals commonly used by household video equipment (NTSC, PAL, and SECAM formats). The carrier signal Y (luminance signal) and chroma (color) signal that are contained in the color bar are overlapped to form a single signal.
Subnet mask **(Subnet Mask)**	This is a numerical value that defines the number of bits used for the network address on a divided network (subnet) from the IP address.
Sync.	The signals output from computers have a specific frequency. If the projector frequency does not match this frequency, the resulting images are not of a good quality. The process of matching the phases of these signals (the relative position of the crests and the troughs in the signal) is called Synchronization. If the signals are not synchronized, flickering, blurriness, and horizontal interference occur.
Tracking	The signals output from computers have a specific frequency. If the projector frequency does not match this frequency, the resulting images are not of a good quality. The process of matching the frequency of these signals (the number of crests in the signal) is called Tracking. If Tracking is not carried out correctly, wide vertical stripes appear in the signal.
Trap IP Address	This is the IP Address for the destination computer used for error notification in SNMP.
Dolby Digital	A sound format developed by Dolby Laboratories. Normal stereo is a 2-channel format that uses two speakers. Dolby Digital is a 6- channel (5.1-channel) system which adds to this a center speaker, two rear speakers, and a sub-woofer.
Progressive	A method of image scanning whereby the image data from a single image is scanned sequentially from top to bottom to create a single image.

Refresh Rate	The light-emitting element of a display maintains the same luminosity and color for an extremely short time. Because of this, the image must be scanned many times per second to refresh the light-emitting element. The number of refresh operations per second is called the Refresh Rate and is expressed in hertz (Hz).

General Notes

Copyright Notice

All rights reserved. No part of this publication may be reproduced, stored in a retrieval system, or transmitted in any form or by any means, electronic, mechanical, photocopying, recording, or otherwise, without the prior written permission of Seiko Epson Corporation. No patent liability is assumed with respect to the use of the information contained herein. Neither is any liability assumed for damages resulting from the use of the information contained herein.

Neither Seiko Epson Corporation nor its affiliates shall be liable to the purchaser of this product or third parties for damages, losses, costs, or expenses incurred by the purchaser or third parties as a result of: accident, misuse, or abuse of this product or unauthorized modifications, repairs, or alterations to this product, or (excluding the U.S.) failure to strictly comply with Seiko Epson Corporation's operating and maintenance instructions.

Seiko Epson Corporation shall not be liable against any damages or problems arising from the use of any options or any consumable products other than those designated as Original Epson Products or Epson Approved Products by Seiko Epson Corporation.

This information is subject to change without notice.

Trademarks

Epson is a registered trademark and Epson Exceed Your Vision is a registered logomark of Seiko Epson Corporation.

PowerLite and PrivateLine are registered trademarks of Epson America, Inc.

Microsoft, Windows, Windows NT, Windows Vista, Windows 7, PowerPoint, and Windows logo are trademarks or registered trademarks of Microsoft Corporation in the United States and/or other countries.

IBM, DOS/V, and XGA are trademarks or registered trademarks of International Business Machines Corp.

Macintosh, Mac, and iMac are registered trademarks of Apple Inc.

Windows, WindowsNT, PowerPoint are trademarks or registered trademarks of Microsoft Corporation in the United States and other countries.

Dolby is a trademark of Dolby Laboratories.

Pixelworks and DNX are trademarks of Pixelworks Inc.

PJLink trademark is a trademark applied for registration or is already registered in Japan, the United States of America and other countries and areas.

Other product names used herein are also for identification purposes only and may be trademarks of their respective owners. Epson disclaims any and all rights in those marks.

©2010 Epson America, Inc.

2/10

Important Safety Instructions

- Do not look into the lens when the projector is on. The bright light can damage your eyes.

- Do not carry the projector by yourself. Two people should use the handles to carry the projector when unpacking or moving it.
- Do not place the projector on an unstable cart, stand, or table. When projecting images vertically, install the projector correctly and appropriately to prevent it from turning over and falling.
- Do not operate the projector on its side, while tilted to one side, or upside down. Do not tilt the projector forward or back at a greater angle than that specified for vertical keystone correction. ☛ p.159
- If the projector is mounted on a ceiling, it should be installed by qualified technicians using mounting hardware designed for use with this projector. Also, when mounting the projector on the ceiling, make sure to pass a wire through the handles to prevent it from falling.
- If you use a ceiling mount and apply adhesives to the mount to prevent the screws from loosening, or if you use lubricants or oils on the projector, the projector case may crack and the projector may fall from its ceiling mount. This could cause serious injury to anyone under the mount and could damage the projector. When installing or adjusting a ceiling mount, do not use adhesives to prevent the screws from loosening and do not use oils or lubricants.
- Do not stand on the projector or place heavy objects on it.
- Do not use the projector where it may be exposed to rain, water, or excessive humidity.
- Unplug the projector from the wall outlet before cleaning. Use a dry cloth (or, for stubborn dirt or stains, a moist cloth that has been wrung dry) for cleaning. Do not use liquid, aerosol cleaners, or solvents such as alcohol, thinner or benzine.
- Do not use any spray containing a flammable gas to remove dirt or dust that is adhering to parts such as the lens or filter of the projector.
- Never spill liquid of any kind into the projector.
- Do not use the projector where it may be exposed to excessive dust or smoke.
- Do not use the projector where it may be exposed to flammable, corrosive, or explosive gases. Because the lamp inside the projector becomes very hot during use, the gases may ignite and result in a fire.
- Never push objects of any kind through the cabinet slots or openings.
- Do not use or store the projector or remote control in a hot location, such as near a heater, in direct sunlight, or in a closed vehicle.
- Incorrect battery usage may cause leakage of battery fluid and battery rupture, which could result in fire, injury or corrosion of the projector. When replacing batteries, take the following precautions: Insert batteries so that the polarities (+ and -) are correct, do not use batteries of different types, do not mix old and new batteries, and do not use any batteries other than those specified in this User's Guide. Replace the batteries as soon as they run out and remove the batteries if you will not be using the projector for a long period of time. Do not expose batteries to heat or flame and do not put them in water. Dispose of used batteries according to local regulations. Keep these batteries out of the reach of children. Batteries are choking hazards and are very dangerous if swallowed. If the batteries leak, wipe away battery fluid with a soft cloth. If battery fluid gets on your hands, wash them immediately.
- Do not use or store the projector in places where high and low temperature extremes occur, or where the temperature can change suddenly.
- Do not set up the projector in places where it might be subjected to vibration or shock.
- Do not set up the projector near high-voltage electrical wires or sources of magnetic fields.
- Do not store the projector standing on its side.
- Do not block the slots and openings in the projector case. They provide ventilation and prevent the projector from overheating. If you are setting up the projector near a wall, leave at least 19.7 inches (50 cm) of space between the wall and the air exhaust vent.

- Do not operate the projector in a closed-in cabinet unless proper ventilation is provided.
- You may need to clean the air filter and intake vent. A clogged air filter or vent can block ventilation needed to cool the projector.
- Do not use or store the projector outdoors for an extended length of time.
- Do not use the projector outside the required temperature range (☛ p.156). Doing so may cause an unstable display and could lead to projector damage.
- Do not store the projector outside the required temperature range (☛ p.156) or in direct sunlight for long periods of time. Doing so may cause damage to the case.
- Do not touch the plug during an electrical storm. Otherwise, you may receive an electric shock.
- Unplug the projector when it will not be used for extended periods. Place the projector near an outlet where the plug can be easily unplugged.
- Unplug the projector from the wall outlet and refer servicing to qualified service personnel under the following conditions: If it does not operate normally when you follow the operating instructions, or exhibits a distinct change in performance; If smoke, strange odors, or strange noises come from the projector; If the power cord or plug is damaged or frayed; If liquid or foreign objects get inside the projector, or if it has been exposed to rain or water; If it has been dropped or the housing has been damaged.
- Except as specifically explained in this User's Guide, do not attempt to service this product yourself. Refer all servicing to qualified personnel. Opening or removing covers may expose you to dangerous voltages and other hazards.
- Never open any covers on the projector except as specifically explained in this User's Guide. Never attempt to disassemble or modify the projector. Refer all repairs to qualified service personnel.
- Use the type of power source indicated on the projector. Use of a different power source may result in fire or electric shock. If you are not sure of the power available, consult your dealer or power company.
- If you use the projector in the country where it was purchased, only use the power cable that came with the projector. If you use the projector in a country other than where you purchased it, use the correct power cord for that country.
- Do not overload wall outlets, extension cords, or power strips. Do not insert the plug into a dusty outlet. This can cause fire or electric shock.
- Take the following precautions when handling the plug: Do not hold the plug with wet hands. Insert the plug firmly into the outlet. Do not pull the power cord when disconnecting the plug; always be sure to hold the plug when disconnecting it. Failure to comply with these precautions could result in fire or electric shock.
- Do not place the projector where the cord can be walked on.
- Ⓗg The lamp(s) in this product contain mercury. Please consult your state and local regulations regarding disposal or recycling. Do not put in the trash.
- Do not place anything that can become warped or damaged by heat near the exhaust vents. Do not bring your hands or face close to the vents while projection is in progress.
- Do not bring your face close to the projector while it is in use.
- Do not disassemble or damage the lamp or subject it to any impacts.
- Before you move the projector, make sure its power is turned off, the plug is disconnected from the outlet, and all cables are disconnected.
- Do not project images while the detachable lens cover is still attached. Heat may cause the lens cover to melt, and if you touch the lens cover you could get burned.

- Do not touch the lens with bare hands.
- Always attach the lens cover to the lens when not using the projector, to prevent the lens from becoming dirty or damaged.
- Never try to remove the lamp immediately after use because it will be extremely hot. Before removing the lamp, turn off the power and wait at least an hour to allow the lamp to cool completely.
- Do not place the source of an open flame, such as a lit candle, on or near the projector.
- Do not modify the power cord. Do not place heavy objects on top of the power cord or bend, twist, or pull it excessively. Keep the power cord away from hot electrical appliances.
- If the lamp breaks, ventilate the room to prevent gases contained in the lamp from being inhaled or coming in contact with the eyes or mouth.
- If the projector is mounted overhead and the lamp breaks, be careful to prevent pieces of glass from falling into your eyes when you open the lamp cover.

WARNING: The cords included with this product contain chemicals, including lead, known to the State of California to cause birth defects or other reproductive harm. ***Wash hands after handling.*** (This notice is provided in accordance with Proposition 65 in Cal. Health & Safety Code § 25249.5 and following.)

FCC Compliance Statement

For United States Users

This equipment has been tested and found to comply with the limits for a Class B digital device, pursuant to Part 15 of the FCC Rules. These limits are designed to provide reasonable protection against harmful interference in a residential installation. This equipment generates, uses and can radiate radio frequency energy and, if not installed and used in accordance with the instructions, may cause harmful interference to radio communications. However, there is no guarantee that interference will not occur in a particular installation. If this equipment does cause harmful interference to radio or television reception, which can be determined by turning the equipment off and on, the user is encouraged to try to correct the interference by one or more of the following measures:

- Reorient or relocate the receiving antenna.
- Increase the separation between the equipment and receiver.
- Connect the equipment into an outlet on a circuit different from that to which the receiver is connected.
- Consult the dealer or an experienced radio/TV technician for help.

WARNING:

The connection of a non-shielded equipment interface cable to this equipment will invalidate the FCC Certification of this device and may cause interference levels which exceed the limits established by the FCC for this equipment. It is the responsibility of the user to obtain and use a shielded equipment interface cable with this device. If this equipment has more than one interface connector, do not leave cables connected to unused interfaces. Changes or modifications not expressly approved by the manufacturer could void the user's authority to operate the equipment.

For Canadian Users

This Class B digital apparatus complies with Canadian ICES-003.

Cet appareil numérique de la classe B est conforme à la norme NMB-003 du Canada.

CPD-27588R2