USA's primary source for projector lamps
myprojectorlamps

PROJECTOR OWNER'S MANUAL

Epson

PowerLite 1780W / 1781W / 1785W / 1795F

Need a replacement lamp for this projector?
www.myprojectorlamps.com

Original manufacturer manual, provided unmodified as a courtesy of MyProjectorLamps.com.
All trademarks belong to their respective owners.

EPSON®
EXCEED YOUR VISION

PowerLite® 1780W/1781W/1785W/1795F User's Guide

Contents

PowerLite 1780W/1781W/1785W/1795F User's Guide **9**
Introduction to Your Projector **10**
Projector Features 10
Product Box Contents 11
Additional Components 13
Additional Projector Software and Manuals 14
Optional Equipment and Replacement Parts 14
Warranty and Registration Information 15
Notations Used in the Documentation 16
Where to Go for Additional Information 16
Projector Part Locations 16
Projector Parts - Front/Top 17
Projector Parts - Rear 18
Projector Parts - Base 19
Projector Parts - Control Panel 20
Projector Parts - Remote Control 22
Setting Up the Projector **25**
Projector Placement 25
Projector Setup and Installation Options 25
Projection Distance 27
Projector Connections 29
Connecting to Computer Sources 29
Connecting to a Computer for USB Video and Audio 29
Connecting to a Computer for VGA Video 30
Connecting to a Computer for HDMI Video and Audio 31
Connecting to a Computer for USB Mouse Control 32
Connecting to a Computer for Sound 33
Connecting to Video Sources 33
Connecting to an HDMI Video Source 34
Connecting to an MHL-Compatible Device 34

Connecting to a Component Video Source ... 35
Connecting to a Composite Video Source ... 36
Connecting to a Video Source for Sound ... 37
Connecting to External USB Devices ... 38
USB Device Projection ... 38
Connecting a USB Device or Camera to the Projector ... 39
Selecting the Connected USB Source ... 39
Disconnecting a USB Device or Camera From the Projector ... 39
Connecting to a Document Camera ... 40
Installing Batteries in the Remote Control ... 40
Opening the Lens Cover ... 42
Using the Projector on a Network ... 43
Wireless Network Projection ... 43
Selecting Wireless Network Settings Manually ... 43
Wireless LAN Menu Settings ... 46
Selecting Wireless Network Settings in Windows ... 48
Selecting Wireless Network Settings on Mac ... 48
Using a QR Code to Connect a Mobile Device ... 48
Using NFC to Connect an Android Device ... 50
Setting Up Wireless Network Security ... 51
Wireless Network Projection from a Mobile Device (Screen Mirroring) ... 52
Screen Mirroring Restrictions ... 52
Selecting Screen Mirroring Settings ... 52
Connecting for Screen Mirroring with Miracast ... 54
Connecting for Screen Mirroring with a Windows 8.x/Windows 10 Computer ... 54
Secure HTTP ... 55
Importing a Web Server Certificate Using the Projector Menus ... 55
Controlling a Networked Projector Using a Web Browser ... 57
Using Basic Projector Features ... 61
Turning On the Projector ... 61
Using the Home Screen ... 63
Turning Off the Projector ... 65
Selecting the Language for the Projector Menus ... 66

Setting the Date and Time ... 67
Adjusting the Image Height ... 68
Image Shape ... 69
Automatically Correcting Image Shape with Screen Fit ... 69
Correcting Image Shape with the Keystone Buttons ... 71
Correcting Image Shape with Quick Corner ... 73
Resizing the Image with the Zoom Ring ... 75
Focusing the Image Using the Focus Ring ... 75
Focusing the Image Using the Focus Button ... 76
Remote Control Operation ... 77
Using the Remote Control as a Wireless Mouse ... 78
Using the Remote Control as a Pointer ... 79
Selecting an Image Source ... 80
Projection Modes ... 81
Changing the Projection Mode Using the Remote Control ... 81
Changing the Projection Mode Using the Menus ... 82
Image Aspect Ratio ... 83
Changing the Image Aspect Ratio ... 83
Available Image Aspect Ratios ... 84
Color Mode ... 85
Changing the Color Mode ... 85
Available Color Modes ... 86
Turning On Auto Iris ... 87
Controlling the Volume with the Volume Buttons ... 88
Projecting a PC Free Presentation ... 88
Supported PC Free File Types ... 88
Starting a PC Free Slide Show ... 90
Starting a PC Free PDF File Presentation ... 91
Starting a PC Free Movie Presentation ... 93
PC Free Display Options ... 94
Adjusting Projector Features ... 96
Shutting Off the Picture and Sound Temporarily ... 96
Stopping Video Action Temporarily ... 97

Zooming Into and Out of Images ... 98
Projector Security Features ... 99
Password Security Types ... 99
Setting a Password ... 99
Selecting Password Security Types ... 101
Entering a Password to Use the Projector ... 102
Saving a User's Logo Image to Display ... 103
Locking the Projector's Buttons ... 105
Unlocking the Projector's Buttons ... 106
Installing a Security Cable ... 107
Projector Identification System for Multiple Projector Control ... 107
Setting the Projector ID ... 107
Setting the Remote Control ID ... 108
Matching Multiple-Projector Display Quality ... 109
Projecting Two Images Simultaneously ... 111
Controlling a Presentation Using Hand Gestures ... 113
Adjusting the Menu Settings ... 116
Using the Projector's Menus ... 116
Image Quality Settings - Image Menu ... 118
Input Signal Settings - Signal Menu ... 120
Projector Feature Settings - Settings Menu ... 123
Projector Setup Settings - Extended Menu ... 125
Projector Network Settings - Network Menu ... 128
Projector Setup Settings - ECO Menu ... 130
Projector Information Display - Info Menu ... 131
Event ID Code List ... 132
Projector Reset Options - Reset Menu ... 134
Maintaining and Transporting the Projector ... 136
Projector Maintenance ... 136
Cleaning the Lens ... 136
Cleaning the Projector Case ... 137
Air Filter and Vent Maintenance ... 137
Cleaning the Air Filter and Vents ... 138

Replacing the Air Filter ... 138
Projector Lamp Maintenance ... 140
Replacing the Lamp ... 141
Resetting the Lamp Timer ... 145
Replacing the Remote Control Batteries ... 146
Transporting the Projector ... 148
Solving Problems ... 149
Projection Problem Tips ... 149
Projector Light Status ... 150
Using the Projector Help Displays ... 153
Solving Image or Sound Problems ... 154
Solutions When No Image Appears ... 154
Solutions When Image is Incorrect Using the USB Display Function ... 155
Solutions When "No Signal" Message Appears ... 156
Displaying From a PC Laptop ... 157
Displaying From a Mac Laptop ... 157
Solutions When "Not Supported" Message Appears ... 157
Solutions When Only a Partial Image Appears ... 158
Solutions When the Image is Not Rectangular ... 158
Solutions When the Image Contains Noise or Static ... 159
Solutions When the Image is Fuzzy or Blurry ... 160
Solutions When the Image Brightness or Colors are Incorrect ... 161
Solutions to Sound Problems ... 161
Solving Projector or Remote Control Operation Problems ... 162
Solutions to Projector Power or Shut-Off Problems ... 163
Solutions to Problems with the Remote Control ... 163
Solutions to Password Problems ... 164
Solutions When a Battery Message Appears ... 165
Solutions to Gesture Presenter Problems ... 165
Solving Network Problems ... 165
Solutions When Wireless Authentication Fails ... 165
Solutions When You Cannot Access the Projector Through the Web ... 166
Solutions When You Cannot Connect Using Screen Mirroring ... 166

Solutions When the Image or Sound Contains Static When Using Screen Mirroring 167
Solutions When You Cannot Read the NFC Tag 167
Where to Get Help 168
Technical Specifications 169
General Projector Specifications 169
Projector Lamp Specifications 171
Remote Control Specifications 172
Projector Dimension Specifications 172
Projector Electrical Specifications 173
Projector Environmental Specifications 174
Projector Safety and Approvals Specifications 174
Supported Video Display Formats 174
USB Display System Requirements 177
Notices 178
Recycling 178
Important Safety Information 178
Important Safety Instructions 179
Restriction of Use 182
List of Safety Symbols (corresponding to IEC60950-1 A2) 182
FCC Compliance Statement 186
Open Source Software License 186
Binding Arbitration and Class Waiver 241
Trademarks 244
Copyright Notice 244
A Note Concerning Responsible Use of Copyrighted Materials 245
Copyright Attribution 245

PowerLite 1780W/1781W/1785W/1795F User's Guide

Welcome to the PowerLite 1780W/1781W/1785W/1795F *User's Guide*.

For a printable PDF copy of this guide, click here.

Introduction to Your Projector

Refer to these sections to learn more about your projector and this manual.

Projector Features
Notations Used in the Documentation
Where to Go for Additional Information
Projector Part Locations

Projector Features

Your projector includes these special features:

Bright, high-resolution projection system

- PowerLite 1780W: Up to 3000 lumens of color brightness (color light output) and 3000 lumens of white brightness (white light output)
- PowerLite 1781W/1785W/1795F: Up to 3200 lumens of color brightness (color light output) and 3200 lumens of white brightness (white light output)

  Note: Color brightness (color light output) and white brightness (white light output) will vary depending on usage conditions. Color light output measured in accordance with IDMS 15.4; white light output measured in accordance with ISO 21118.

- PowerLite 1780W/1781W/1785W: Native resolution of 1280 × 800 pixels (WXGA)
- PowerLite 1795F: Native resolution of 1920 × 1080 pixels (1080p)

Flexible connectivity

- Plug-and-play USB projection
- Wireless network support for projection, monitoring, and control via remote
- Projection from iOS or Android devices and free Epson iProjection app; visit epson.com/iprojection (U.S.) or epson.ca/iprojection (Canada) for more information
- PC Free photo slide shows via connected USB memory devices or Epson document camera
- HDMI port for video devices, including MHL support
- Miracast screen mirroring for laptops and mobile devices (PowerLite 1785W/1795F)

Easy-to-use setup and operation features

- Epson's quick-connect on-screen QR code feature for easy wireless setup
- Real-time, automatic vertical and horizontal keystone correction (**Auto H/V-Keystone**) always displays a rectangular screen (PowerLite 1781W/1785W/1795F)
- Automatic vertical keystone correction (**Auto V-Keystone**) always displays a rectangular screen (PowerLite 1780W)
- Screen Fit feature automatically resizes images for your projection screen (PowerLite 1781W/1785W/1795F)
- Epson's Instant Off and Direct Power On features for quick setup and shut down
- Network message broadcast system to project timely messages to all networked projectors (Windows only)
- Gesture Presenter feature for remote control free presentations (PowerLite 1785W/1795F)

Note: The PowerLite 1795F is shown in most illustrations in this manual, unless mentioned otherwise.

Product Box Contents
Additional Components
Additional Projector Software and Manuals
Optional Equipment and Replacement Parts
Warranty and Registration Information

Parent topic: Introduction to Your Projector

Related concepts
Image Shape

Related references
Projector Setup Settings - Extended Menu

Related tasks
Turning On the Projector
Using the Home Screen

Product Box Contents

Save all the packaging in case you need to ship the projector. Always use the original packaging (or equivalent) when shipping.

Make sure your projector box included all of these parts:

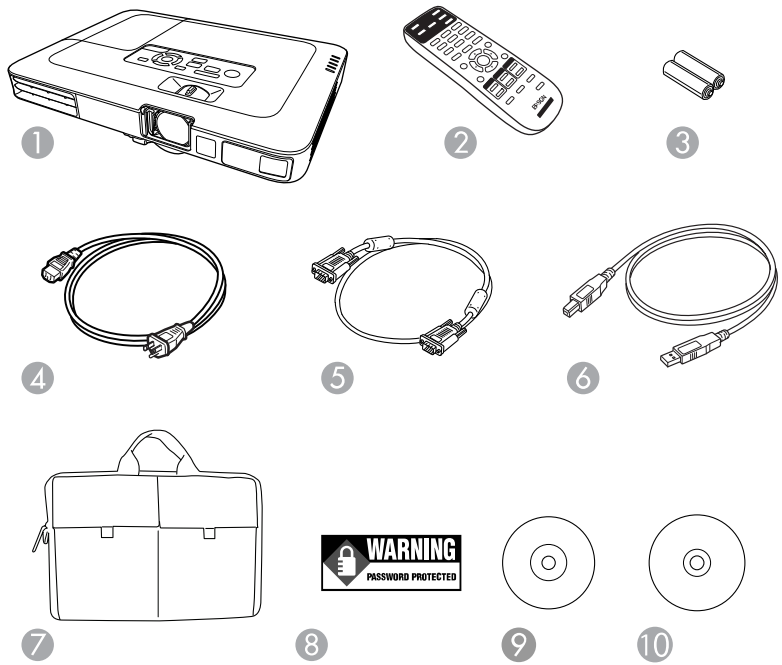

1 Projector
2 Remote control
3 Remote control batteries (two AA alkaline)
4 Power cord
5 VGA computer cable
6 USB cable
7 Carrying case
8 Password Protected sticker
9 Projector documentation CD
10 Projector software CD

Parent topic: Projector Features

Related concepts

Projector Connections

Additional Components

Depending on how you plan to use the projector, you may need to obtain additional components.

Note: To connect a Mac that does not include a compatible video output port, you need to obtain an adapter that allows you to connect to an input port on the projector. Contact Apple for compatible adapter options. To connect a smartphone or tablet, you may need to obtain an adapter that allows you to connect to the projector. This allows you to mirror your smartphone or tablet screens, watch movies, and more. Contact your device manufacturer for compatible adapter options.

Unless listed as available from Epson in this table, see your local computer or electronics dealer for purchase information.

Signal or connection type	Additional component necessary
Composite video	RCA-style video or A/V cable
Component video	D-sub, 15-pin, component-to-VGA video cable or adapter Available for purchase from Epson or an authorized Epson reseller.
HDMI	Compatible HDMI cable Available for purchase from Epson or an authorized Epson reseller. **Note:** Older Mac computers (2009 and earlier) may not support HDMI audio.
MHL	MHL-compatible device or device with an integrated MHL connector, MHL cable, or HDMI cable and MHL adapter compatible with your device Available for purchase from Epson or an authorized Epson reseller.
Audio from certain ports	Commercially available audio cable compatible with your device

Parent topic: Projector Features

Additional Projector Software and Manuals

After connecting and setting up the projector, install the projector software from the included software CD, or download the software and manuals as necessary.

You can install the projector software programs listed here and view their manuals for instructions on using them.

Note: If you still need help after checking this manual and the sources listed here, you can use the Epson PrivateLine Support service to get help fast. For details, see "Where to Get Help".

Projector software	Manual	Description
EasyMP Multi PC Projection	*EasyMP Multi PC Projection Operation Guide*	Lets you hold interactive meetings by projecting the computer screens of users over a network.
Epson iProjection app	Instructions are included with the app	Lets you project from an iOS or Android device if your projector is connected to a network that includes a wireless access point. Visit epson.com/iprojection (U.S.) or epson.ca/iprojection (Canada) for more information.

Parent topic: Projector Features

Optional Equipment and Replacement Parts

You can purchase screens, other optional accessories, and replacement parts from an Epson authorized reseller. To find the nearest reseller, call 800-GO-EPSON (800-463-7766) in the U.S. or 800-807-7766 in Canada. Or you can purchase online at epsonstore.com (U.S. sales) or epsonstore.ca (Canadian sales).

Epson offers the following optional accessories and replacement parts for your projector:

Option or part	Part number
Genuine Epson replacement lamp (ELPLP94)	V13H010L94
Replacement air filter (ELPAF53)	V13H134A53
Kensington security lock	ELPSL01
Accolade Duet portable projector screen	ELPSC80

Option or part	Part number
ES3000 Ultra Portable Projection screen	V12H002S3Y
ES1000 Ultra Portable Tabletop Projection screen	V12H002S4Y
Universal projector mount (ELPMBPJG)	V12H808001
Component-to-VGA video cable (ELPKC19)	V12H005C19
25 ft (20 m) VGA computer cable (ELPKC10)	F3H982-25
12 ft (4 m) VGA computer cable	ELPKC09
4 ft (1 m) VGA computer cable	ELPKC02
Ceiling mount	ELPMB23
PowerLite Pilot 2 (ELPCB02)	V12H614020
Epson DC-07 USB document camera (ELPDC07)	V12H759020
Epson DC-13 document camera (ELPDC13)	V12H757020
Epson DC-21 document camera (ELPDC21)	V12H758020
HDMI audio video cable 3 feet (0.9 m) length	AV22300-03
HDMI audio video cable 6 feet (1.8 m) length	AV22300-06
10 ft. (3.0 m) Component-to-VGA video cable (ELPKC19)	V12H005C19
1-Year Extended Exchange Warranty	EPPEXPA1
2-Year Extended Exchange Warranty	EPPEXPA2

Parent topic: Projector Features

Warranty and Registration Information

Your projector comes with a basic warranty that lets you project with confidence. For details, see the warranty that came with your projector.

In addition, Epson offers free Extra Care Road Service. In the unlikely event of an equipment failure, you won't have to wait for your unit to be repaired. Instead, Epson will ship you a replacement unit anywhere in the United States, Canada, or Puerto Rico. See the Extra Care Road Service brochure for details.

Register your product online using the projector CD or at this site: epson.com/webreg.

Registering also lets you receive special updates on new accessories, products, and services.

Parent topic: Projector Features

Notations Used in the Documentation

Follow the guidelines in these notations as you read your documentation:

- **Warnings** must be followed carefully to avoid bodily injury.
- **Cautions** must be observed to avoid damage to your equipment.
- **Notes** contain important information about your projector.
- **Tips** contain additional projection information.

Parent topic: Introduction to Your Projector

Where to Go for Additional Information

Need quick help on using your projector? Here's where to look for help:

- Built-in help system

  Press the **Home** button on the remote control or projector, select **Help**, and press **Enter** to get quick solutions to common problems.

- epson.com/support (U.S) or epson.ca/support (Canada)

  View FAQs (frequently asked questions) and e-mail your questions to Epson technical support 24 hours a day.

- If you still need help after checking this manual and any other sources listed here, you can use the Epson PrivateLine Support service to get help fast. For details, see "Where to Get Help".

Parent topic: Introduction to Your Projector

Related references

Where to Get Help

Projector Part Locations

Check the projector part illustrations to learn about the parts on your projector.

Note: The PowerLite 1795F projector is shown in most illustrations in this manual, unless noted otherwise.

Projector Parts - Front/Top

Projector Parts - Rear

Projector Parts - Base
Projector Parts - Control Panel
Projector Parts - Remote Control
Parent topic: Introduction to Your Projector

Projector Parts - Front/Top

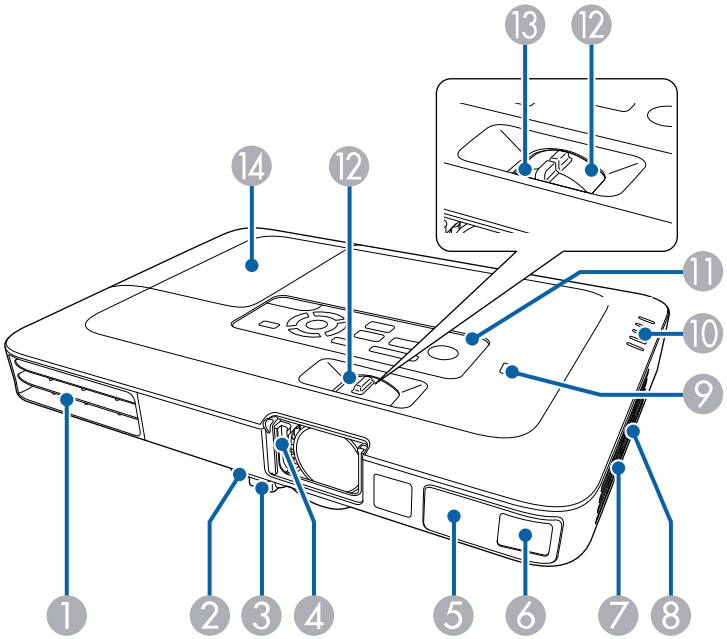

1 Exhaust vent
2 Foot release lever
3 Front adjustable foot
4 A/V Mute slide
5 Remote control receiver
6 Sensor (PowerLite 1781W/1785W/1795F)
7 Air filter cover/intake vent

8 Speaker

9 NFC tag (PowerLite 1781W/1785W/1795F)

10 Status lights

11 Control panel

12 Zoom ring

13 Focus ring (PowerLite 1780W)

14 Lamp cover

Parent topic: Projector Part Locations

Projector Parts - Rear

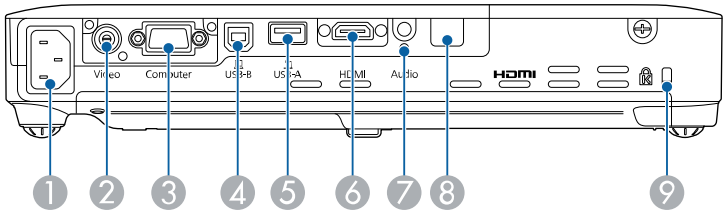

1 AC input

2 **Video** port

3 **Computer** port

4 **USB-B** port

5 **USB-A** port

6 **HDMI** port

7 **Audio** port

8 Remote receiver

9 Security lock slot

Parent topic: Projector Part Locations

Projector Parts - Base

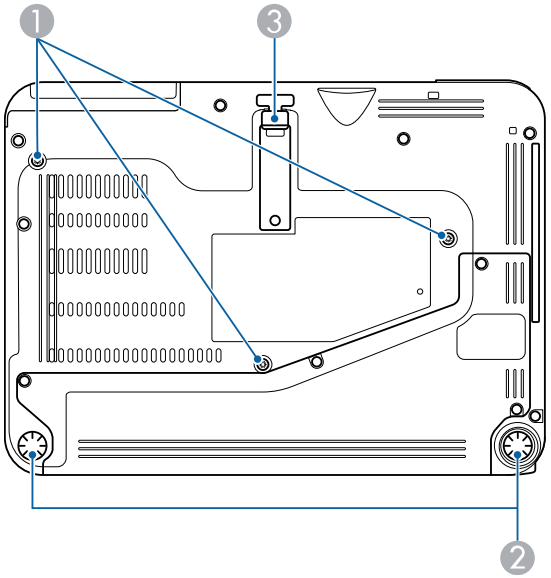

1 Ceiling mount holes (3)

2 Rear feet

3 Front adjustable foot

Parent topic: Projector Part Locations

Projector Parts - Control Panel

PowerLite 1780W

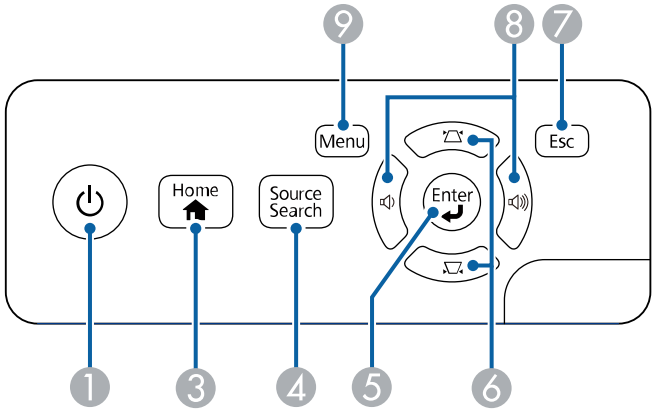

PowerLite 1781W/1785W/1795F

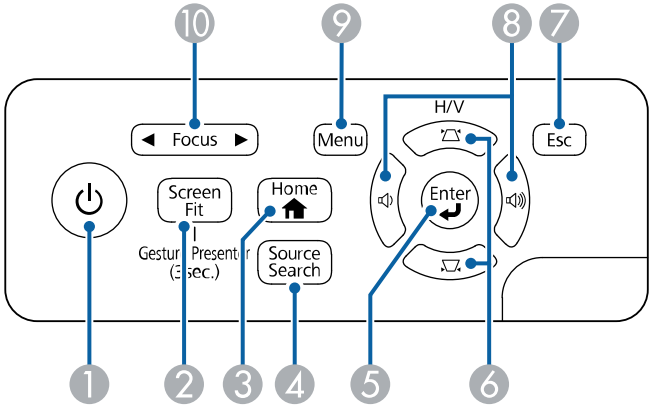

1 Power button

2 **Screen Fit** button (PowerLite 1781W/1785W/1795F; press for three seconds to use the Gesture Presenter feature on PowerLite 1785W/1795F)

3 **Home** button (displays and closes the Home screen)

4 **Source Search** button (searches for connected video sources)

5 **Enter** button (selects options)

6 Vertical keystone adjustment buttons (display the adjustment screen and adjust screen shape) and arrow buttons

7 **Esc** button (cancels/exits functions)

8 Volume buttons (adjust speaker volume), horizontal keystone adjustment buttons, and arrow buttons

9 **Menu** button (accesses projector menu system)

10 **Focus** button (adjusts the image focus; PowerLite 1781W/1785W/1795F)

Parent topic: Projector Part Locations

Related tasks

Using the Projector Help Displays

Projector Parts - Remote Control

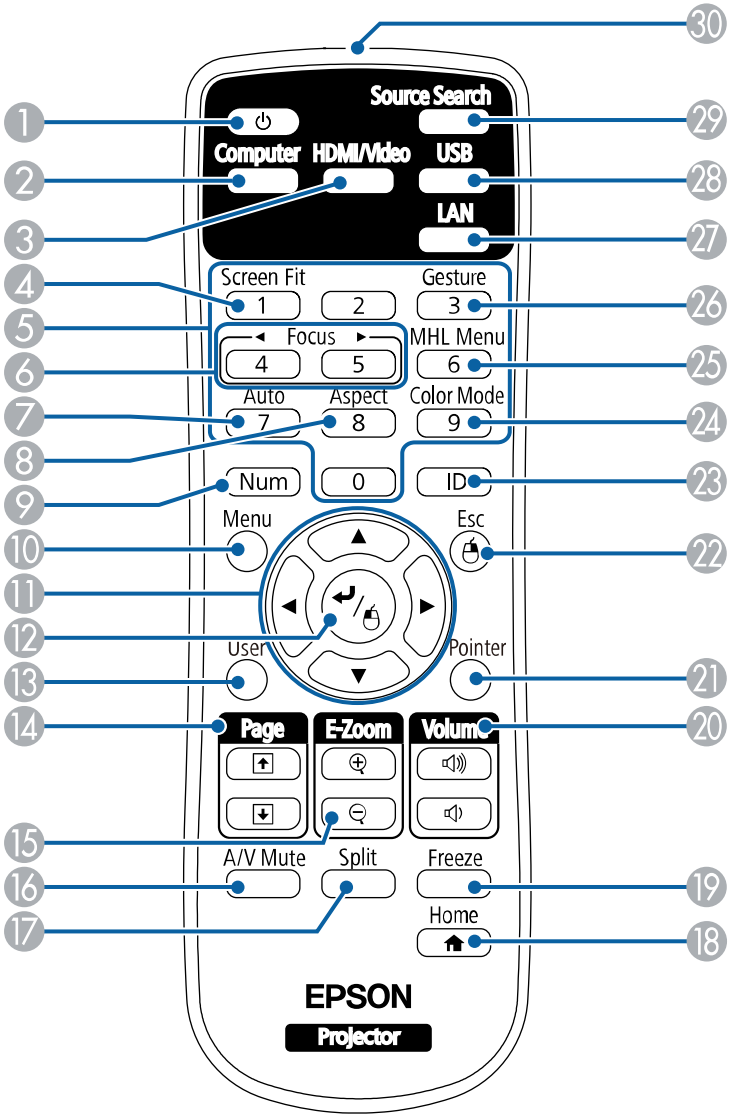

1 Power button

2 **Computer** button (cycles through connected computer sources)
3 **HDMI/Video** button (cycles through connected HDMI/video sources)
4 **Screen Fit** button (adjusts image shape)
5 Numeric buttons (enter numbers)
6 Focus buttons (adjust image focus; PowerLite 1781W/1785W/1795F)
7 **Auto** button (automatically adjusts position, tracking, and sync settings)
8 **Aspect** button (selects the image aspect ratio)
9 **Num** button (when held down, switches numeric buttons to number function)
10 **Menu** button (accesses projector menu system)
11 Arrow buttons (move through on-screen options and control wireless mouse functions)
12 Enter button (selects options and controls wireless mouse functions)
13 **User** button (customizable for different functions)
14 **Page** up/down buttons (control presentation slides)
15 **E-Zoom +/–** buttons (zoom into and out of the image)
16 **A/V Mute** button (turns off picture and sound)
17 **Split** button (splits the screen between two image sources)
18 **Home** button (accesses source selection, projector help information, and other features)
19 **Freeze** button (stops video action)
20 **Volume** up/down buttons (adjust speaker volume)
21 **Pointer** button (activates on-screen pointer)
22 **Esc** button (cancels/exits functions and controls wireless mouse functions)
23 **ID** button (selects which projector you want to control)
24 **Color Mode** button (selects display modes)
25 **MHL Menu** button (displays the main menu of the connected MHL device)
26 **Gesture** button (displays the Gesture Presenter menu screen; PowerLite 1785W/1795F)
27 **LAN** button (cycles through connected network sources)
28 **USB** button (cycles through connected USB sources)

29 **Source Search** button (searches for connected sources)

30 Remote control signal emitter (emits remote control signals)

Parent topic: Projector Part Locations

Setting Up the Projector

Follow the instructions in these sections to set up your projector for use.

Projector Placement
Projector Connections
Installing Batteries in the Remote Control
Opening the Lens Cover

Projector Placement

You can place the projector on almost any flat surface to project an image.

You can also install the projector in a ceiling mount if you want to use it in a fixed location.

Keep these considerations in mind as you select a projector location:

- Place the projector on a sturdy, level surface or install it using a compatible mount.
- Leave plenty of space around and under the projector for ventilation, and do not place it on top of or next to anything that could block the vents.
- Position the projector within reach of a grounded electrical outlet or extension cord.

Projector Setup and Installation Options
Projection Distance

Parent topic: Setting Up the Projector

Projector Setup and Installation Options

You can set up or install your projector in the following ways:

Front

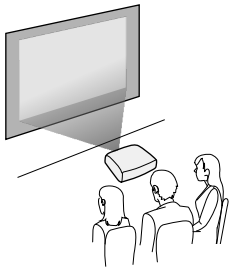

Rear

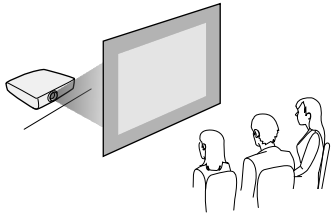

Front Ceiling

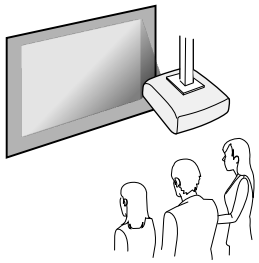

Rear Ceiling

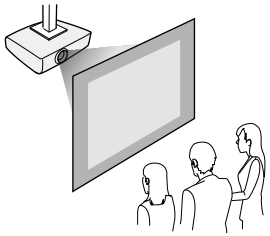

Wherever you set up the projector, make sure to position it squarely in front of the center of the screen, not at an angle, if possible.

If you project from the ceiling or from the rear, be sure to select the correct **Projection** option in the projector's menu system.

Parent topic: Projector Placement

Related references

Projector Setup Settings - Extended Menu

Projection Distance

The distance at which you place the projector from the screen determines the approximate size of the image. The image size increases the farther the projector is from the screen, but can vary depending on the zoom factor, aspect ratio, and other settings.

Use the tables here to determine approximately how far to place the projector from the screen based on the size of the projected image. (Conversion figures may have been rounded up or down.) You can also use the projector Throw Distance Calculator at epson.com/support (U.S.) or epson.ca/support (Canada).

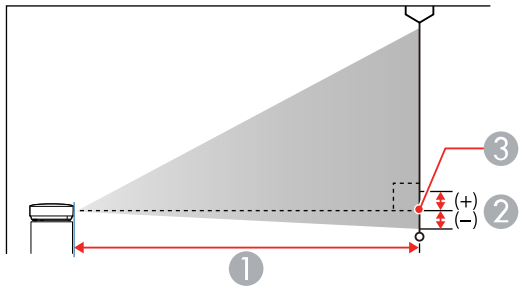

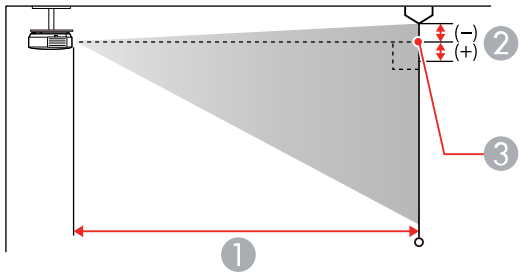

1 Projection distance

2 Distance from the center of the lens to the base of the image

3 Center of lens

PowerLite 1780W/1781W/1785W

16:10 Aspect Ratio Image or Screen		
Screen or image size	**Projection distance (1)** **Wide to Tele**	**Offset from lens center (2)**
50 inches	44 to 53 inches (112 to 135 cm)	–2.4 inches (–6 cm)
80 inches	71 to 85 inches (181 to 217 cm)	–3.9 inches (–10 cm)
100 inches	89 to 107 inches (226 to 271 cm)	–4.8 inches (–12 cm)
150 inches	134 to 161 inches (340 to 408 cm)	–7.2 inches (–18 cm)

PowerLite 1795F

16:9 Aspect Ratio Image or Screen		
Screen or image size	**Projection distance (1)** **Wide to Tele**	**Offset from lens center (2)**
50 inches	44 to 54 inches (113 to 136 cm)	–1.6 inch (–4 cm)
80 inches	71 to 86 inches (181 to 219 cm)	–2.6 inches (–7 cm)
100 inches	89 to 108 inches (227 to 275 cm)	–3.3 inches (–8 cm)
150 inches	135 to 163 inches (342 to 413 cm)	–4.9 inches (–13 cm)

Parent topic: Projector Placement

Projector Connections

See these sections to connect the projector to a variety of projection sources.

Caution: If you will use the projector at altitudes above 4921 feet (1500 m), turn on **High Altitude Mode** to ensure the projector's internal temperature is regulated properly.

Connecting to Computer Sources
Connecting to Video Sources
Connecting to External USB Devices
Connecting to a Document Camera

Parent topic: Setting Up the Projector

Related references

Projector Setup Settings - Extended Menu

Connecting to Computer Sources

Follow the instructions in these sections to connect a computer to the projector.

Connecting to a Computer for USB Video and Audio
Connecting to a Computer for VGA Video
Connecting to a Computer for HDMI Video and Audio
Connecting to a Computer for USB Mouse Control
Connecting to a Computer for Sound

Parent topic: Projector Connections

Connecting to a Computer for USB Video and Audio

If your computer meets the system requirements, you can send video and audio output to the projector through the computer's USB port (preferably USB 2.0). Connect the projector to your computer using a USB cable.

Note: Connecting through a USB hub may not work properly. Connect the USB cable directly to the projector.

1. In the projector's Extended menu, set the **USB Type B** setting to **USB Display**.
2. Turn on your computer.

3. Connect the cable to your projector's **USB-B** port.

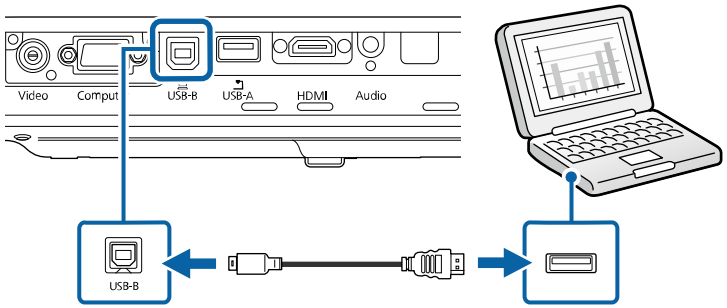

4. Connect the other end to any available USB port on your computer.
5. Do one of the following:
   - **Windows 10/8.x**: Click **EPSON_PJ_UD** when it appears on the desktop, then select **Run EMP_UDSE.EXE** in the dialog box that appears to install the Epson USB Display software.
   - **Windows 7/Windows Vista**: Select **Run EMP_UDSE.EXE** in the dialog box that appears to install the Epson USB Display software.
   - **Mac**: The USB Display setup folder appears on your screen. Select **USB Display Installer** and follow the on-screen instructions to install the Epson USB Display software.

   Follow any on-screen instructions. You need to install this software only the first time you connect the projector to the computer.

The projector displays the image from your computer's desktop and outputs sound, if your presentation contains audio.

Parent topic: Connecting to Computer Sources

Connecting to a Computer for VGA Video

You can connect the projector to your computer using a VGA computer cable.

Note: To connect a Mac that includes only a Mini DisplayPort, Thunderbolt port, or Mini-DVI port for video output, you need to obtain an adapter that allows you to connect to the projector's VGA video port. Contact Apple for compatible adapter options.

1. If necessary, disconnect your computer's monitor cable.
2. Connect the VGA computer cable to your computer's monitor port.

3. Connect the other end to a **Computer** port on the projector.

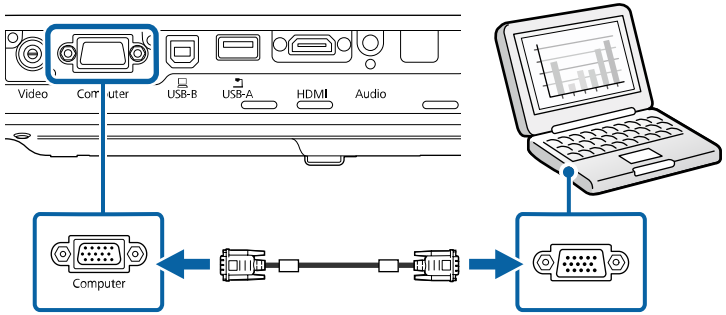

4. Tighten the screws on the VGA connector.

Parent topic: Connecting to Computer Sources

Related tasks

Connecting to a Computer for Sound

Connecting to a Computer for HDMI Video and Audio

If your computer has an HDMI port, you can connect it to the projector using an optional HDMI cable.

Note: To connect a Mac that includes only a Mini DisplayPort, Thunderbolt port, or Mini-DVI port for video output, you need to obtain an adapter that allows you to connect to the projector's **HDMI** port. Contact Apple for compatible adapter options. Older Mac computers (2009 and earlier) may not support audio through the **HDMI** port.

1. Connect the HDMI cable to your computer's HDMI output port.

2. Connect the other end to the projector's **HDMI** port.

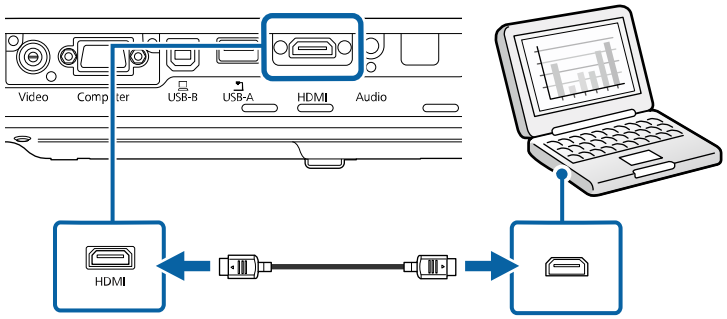

Note: The projector converts the digital audio signal sent from your computer into a mono analog signal for the internal speaker. If you have problems hearing audio through the HDMI connection, connect one end of an optional 3.5 mm stereo mini-jack audio cable to the projector's **Audio** port and the other end to your computer's audio out port. Then select the audio port you connected to as the **HDMI Audio Output** setting in the Extended menu.

Parent topic: Connecting to Computer Sources

Connecting to a Computer for USB Mouse Control

If you connected your computer to a **Computer**, **USB-B**, or **HDMI** port on the projector, you can set up the remote control to act as a wireless mouse. This lets you control projection at a distance from your computer. To do this, connect the projector to your computer using a USB cable, if it is not connected already.

1. Connect the USB cable to your projector's **USB-B** port.

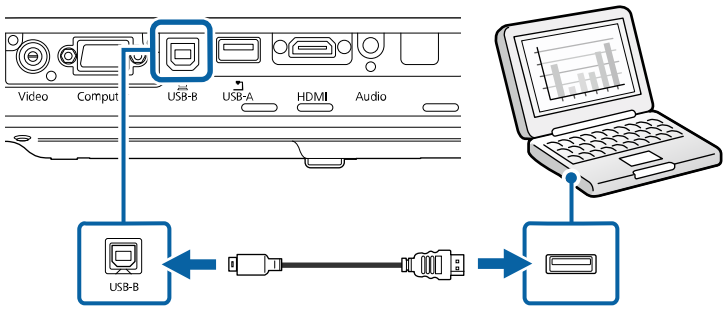

2. Connect the other end to any available USB port on your computer.
3. If necessary, configure your computer to work with an external USB mouse. See your computer documentation for details.

Parent topic: Connecting to Computer Sources

Related tasks

Using the Remote Control as a Wireless Mouse

Connecting to a Computer for Sound

If your computer presentation includes sound and you did not connect it using the projector's USB **TypeB** or **HDMI** port, you can still play sound through the projector's speaker system. Just connect an optional 3.5 mm stereo mini-jack audio cable as described here.

1. Connect the audio cable to your laptop's headphone or audio-out jack, or your desktop's speaker or audio-out port.
2. Connect the other end to the projector's **Audio** port.

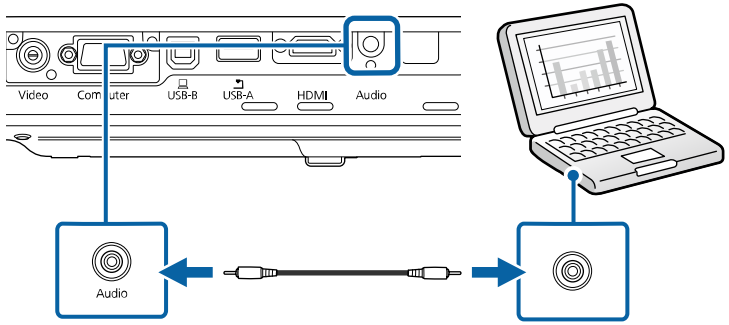

Parent topic: Connecting to Computer Sources

Connecting to Video Sources

Follow the instructions in these sections to connect video devices to the projector.

Connecting to an HDMI Video Source
Connecting to an MHL-Compatible Device
Connecting to a Component Video Source
Connecting to a Composite Video Source
Connecting to a Video Source for Sound

Parent topic: Projector Connections

Connecting to an HDMI Video Source

If your video source has an HDMI port, you can connect it to the projector using an optional HDMI cable. The HDMI connection provides the best image quality.

1. Connect the HDMI cable to your video source's HDMI output port.
2. Connect the other end to the projector's **HDMI** port.

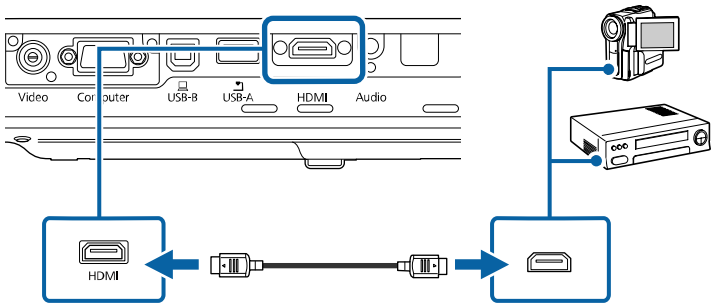

Note: The projector converts the digital audio signal sent from your video source into a mono analog signal for the internal speaker.

Note: If you have problems hearing audio through the HDMI connection, you can use the **Audio** port instead to play sound. Connect one end of an optional 3.5 mm stereo mini-jack audio cable to the projector's **Audio** port and the other end to your computer's audio out port. Then select **Audio** as the **HDMI Audio Output** setting in the Extended menu.

Parent topic: Connecting to Video Sources

Related references

Projector Setup Settings - Extended Menu

Connecting to an MHL-Compatible Device

If you have an MHL-compatible smartphone or tablet, you can connect it to the projector using either an MHL cable or an HDMI cable with a device-compatible MHL adapter. If you have a device with a built-in MHL connector, plug it directly into the **HDMI** port.

Note: Some connected devices may not charge when using an MHL adapter.

1. Connect the MHL cable or adapter to your device's Micro-USB port.
2. If you are using an MHL adapter, connect it to an MHL-compatible HDMI cable.
3. Connect the other end of the cable to the projector's **HDMI** port.

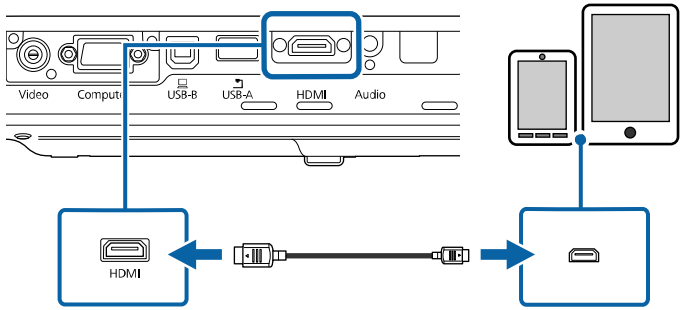

Note: The projector converts the digital audio signal sent from your video source into a mono analog signal for the internal speaker.

Parent topic: Connecting to Video Sources

Connecting to a Component Video Source

If your video source has component video ports, you can connect it to the projector using an optional component-to-VGA video cable. Depending on your component ports, you may need to use an adapter cable along with a component video cable.

1. Connect the component connectors to your video source's color-coded component video output ports, usually labeled **Y**, **Pb**, **Pr** or **Y**, **Cb**, **Cr**. If you are using an adapter, connect these connectors to your component video cable.

2. Connect the VGA connector to the **Computer** port on the projector.

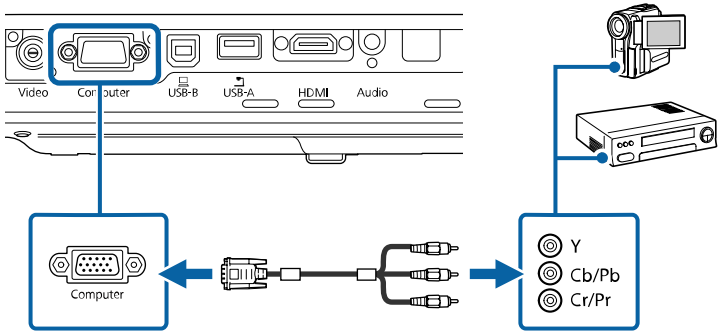

3. Tighten the screws on the VGA connector.

If your image colors appear incorrect, you may need to change the **Input Signal** setting in the projector's Signal menu.

Parent topic: Connecting to Video Sources

Related references

Input Signal Settings - Signal Menu

Related tasks

Connecting to a Video Source for Sound

Connecting to a Composite Video Source

If your video source has a composite video port, you can connect it to the projector using an optional RCA-style video or A/V cable.

1. Connect the cable with the yellow connector to your video source's yellow video output port.

2. Connect the other end to the projector's **Video** port.

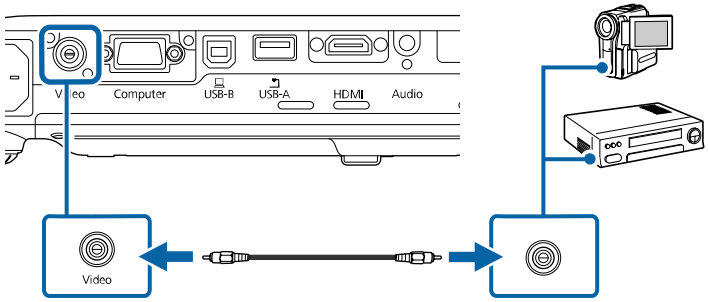

Parent topic: Connecting to Video Sources

Related tasks

Connecting to a Video Source for Sound

Connecting to a Video Source for Sound

You can play sound through the projector's speaker system if your video source has audio output ports. Connect the projector to the video source using a stereo mini-jack adapter cable (with one 3.5 mm mini-plug and two RCA plugs).

Note: If you connected your video source to the projector using an HDMI cable, the audio signal is transferred with the video signal; you do not need an additional cable for sound.

1. Connect the audio cable to your video source's audio-out ports.
2. Connect the other end of the cable to the projector's **Audio** port or ports.

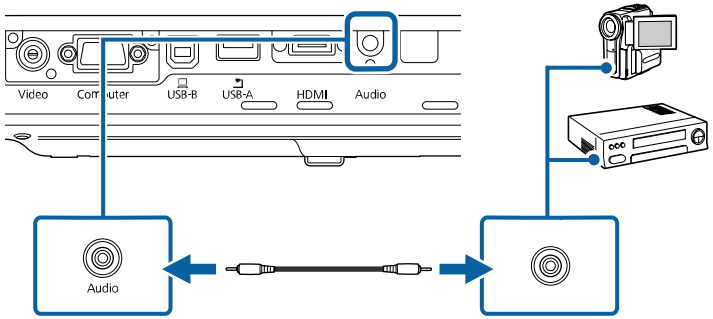

Parent topic: Connecting to Video Sources

Connecting to External USB Devices

Follow the instructions in these sections to connect external USB devices to the projector.

USB Device Projection
Connecting a USB Device or Camera to the Projector
Selecting the Connected USB Source
Disconnecting a USB Device or Camera From the Projector

Parent topic: Projector Connections

Related topics

Projecting a PC Free Presentation

USB Device Projection

You can project images and other content without using a computer or video device by connecting any of these devices to your projector:

- USB flash drive
- Digital camera or smartphone
- USB hard drive
- Multimedia storage viewer

Note: Digital cameras or smartphones must be USB-mounted devices, not TWAIN-compliant devices, and must be USB Mass Storage Class-compliant.

Note: USB hard drives must meet these requirements:

- USB Mass Storage Class-compliant (not all USB Mass Storage Class devices are supported)
- Formatted in FAT or FAT32
- Self-powered by their own AC power supplies (bus-powered hard drives are not recommended)
- Does not have multiple partitions

You can project slide shows from image files on a connected USB device.

Parent topic: Connecting to External USB Devices

Connecting a USB Device or Camera to the Projector

You can connect your USB device or camera to the projector's **USB-A** port and use it to project images and other content.

1. If your USB device came with a power adapter, plug the device into an electrical outlet.
2. Connect the USB cable (or USB flash drive or USB memory card reader) to the projector's **USB-A** port.

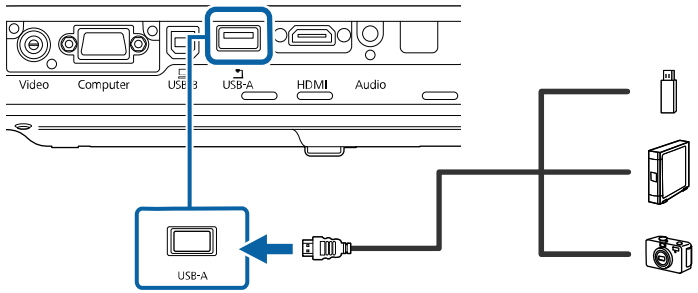

Note: Do not connect a USB hub or a USB cable longer than 10 feet (3 m), or the device may not operate correctly.

3. Connect the other end of the cable (if applicable) to your device.

Parent topic: Connecting to External USB Devices

Selecting the Connected USB Source

You can switch the projector's display to the source you connected to the **USB-A** port.

1. Make sure the connected USB source is turned on, if necessary.
2. Press the **Source Search** button on the remote control.
3. Press the **Source Search** button again to cycle through other USB sources, if available.

Parent topic: Connecting to External USB Devices

Disconnecting a USB Device or Camera From the Projector

When you finish presenting with a connected USB device or camera, you must prepare to disconnect the device from the projector.

1. If the device has a power button, turn off and unplug the device.
2. Disconnect the USB device or camera from the projector.

Parent topic: Connecting to External USB Devices

Connecting to a Document Camera

You can connect a document camera to your projector to project images viewed by the camera.

Depending on your Epson document camera model, do one of the following to connect the document camera to your projector:

- For the Epson DC-07 document camera, locate the USB cable that came with the camera and connect it to the projector's **USB-A** port and to the document camera's USB Type B port.
- For the Epson DC-13 document camera, connect it to the projector's **HDMI**, **Computer**, or **Video** port and to the corresponding port on the document camera. See the document camera manual for details.
- For the Epson DC-21 document camera, connect it to the projector's **HDMI**, **Computer**, or **Video** port and to the corresponding port on the document camera. See the document camera manual for details.

Note: For additional features supported by software, connect your document camera to your computer instead of the projector. See the document camera manual for details.

Parent topic: Projector Connections

Related concepts

Projector Connections

Related references

Optional Equipment and Replacement Parts

Installing Batteries in the Remote Control

The remote control uses the two AA batteries that came with the projector.

Caution: Use only the type of batteries specified in this manual. Do not install batteries of different types, or mix new and old batteries.

1. Remove the battery cover.

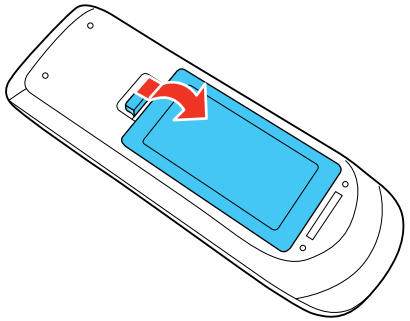

2. Insert the batteries with the **+** and **–** ends facing as shown.

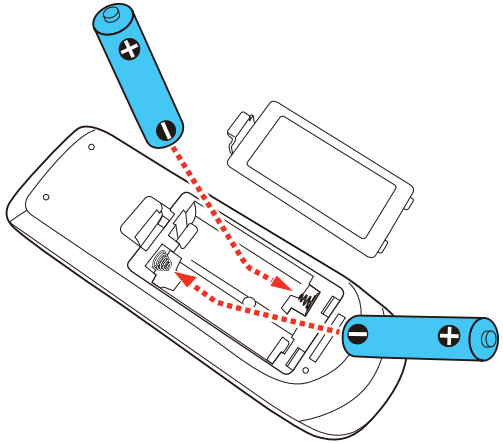

3. Replace the battery cover and press it down until it clicks into place.

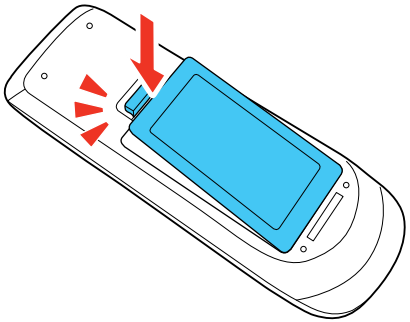

Warning: Dispose of used batteries according to local regulations. Do not expose batteries to heat or flame. Keep batteries out of the reach of children; they are choking hazards and are very dangerous if swallowed.

Parent topic: Setting Up the Projector

Opening the Lens Cover

To open the projector's lens cover, slide the **A/V Mute** slide lever until it clicks into the open position.

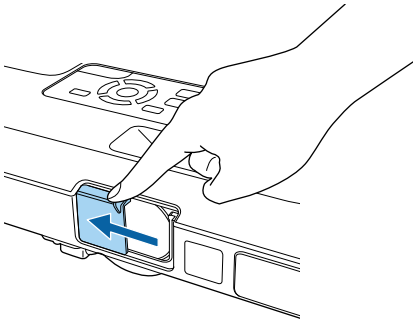

Parent topic: Setting Up the Projector

Using the Projector on a Network

Follow the instructions in these sections to set up your projector for use on a network.

Wireless Network Projection
Controlling a Networked Projector Using a Web Browser

Wireless Network Projection

You can project over a wireless network. To do this, you must set up your projector and computer for wireless projection.

To connect wirelessly to your projector, configure the connection using the projector's Network menus.

After setting up the projector as described here, install the network software from the included CD or download the software and manuals as necessary.

Note: If your projector is connected via a LAN cable to a network that includes a wireless access point, you can connect to the projector wirelessly through the access point using the Epson network software.

Selecting Wireless Network Settings Manually
Selecting Wireless Network Settings in Windows
Selecting Wireless Network Settings on Mac
Using a QR Code to Connect a Mobile Device
Using NFC to Connect an Android Device
Setting Up Wireless Network Security
Wireless Network Projection from a Mobile Device (Screen Mirroring)
Secure HTTP
Importing a Web Server Certificate Using the Projector Menus

Parent topic: Using the Projector on a Network

Related references

Additional Projector Software and Manuals
Optional Equipment and Replacement Parts

Selecting Wireless Network Settings Manually

Before you can project from your wireless network, you must select the network settings for the projector using its menu system.

1. Turn on the projector.
2. Press the **Menu** button.
3. Select the **Network** menu and press **Enter**.

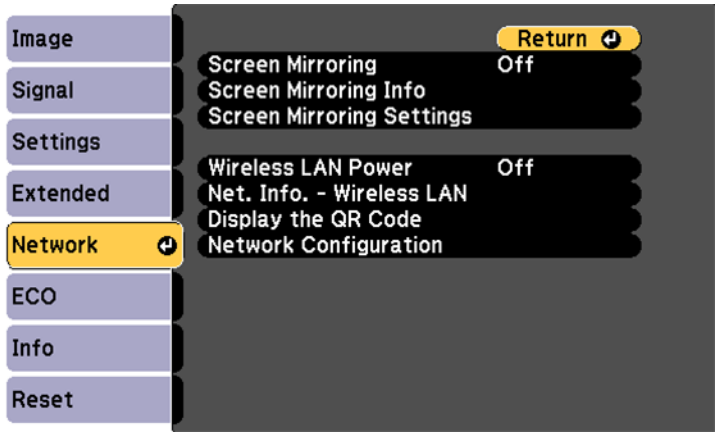

4. Make sure the **Wireless LAN Power** setting is set to **On**.
5. Select **Network Configuration** and press **Enter**.
6. Select the **Basic** menu and press **Enter**.

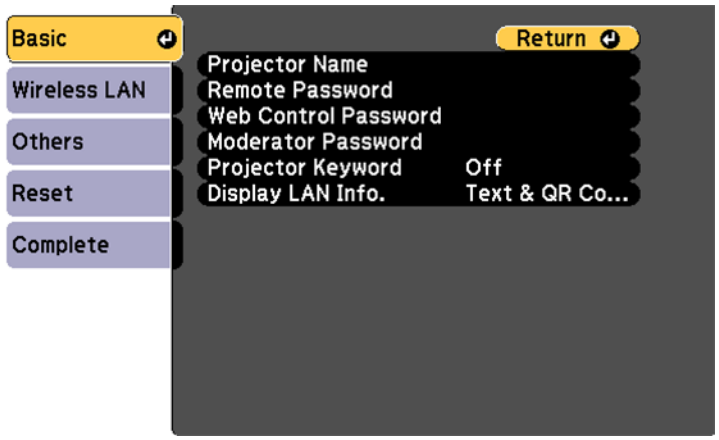

7. Select the following basic options as necessary:
   - **Projector Name** lets you enter a name up to 16 alphanumeric characters long to identify the projector over the network.
   - **Remote Password** lets you enter a password up to 8 alphanumeric characters long for accessing the Remote or Basic Control screen in the Epson Web Control. (Default user name is **EPSONREMOTE**; default password is **guest**.)
   - **Web Control Password** lets you enter a password up to 8 alphanumeric characters long for accessing the projector over the web. (Default user name is **EPSONWEB**; default password is **admin**.)
   - **Moderator Password** lets you enter a password up to 4 numbers long for accessing the projector as a moderator with EasyMP Multi PC Projection or the Epson iProjection app.
   - **Projector Keyword** lets you turn on a security password to prevent access to the projector by anyone not in the room with it. The projector displays a random keyword that you must enter from a computer using the EasyMP Multi PC Projection software or an iOS or Android device using iProjection.
   - **Display LAN Info** lets you select how the projector displays network information. You can select an option to display a QR code that lets you quickly connect your iOS or Android devices using the Epson iProjection app.

   Note: Use the displayed keyboard to enter the name, passwords and keyword. Press the arrow buttons on the remote control to highlight characters and press **Enter** to select them.

8. Select the **Wireless LAN** menu and press **Enter**.

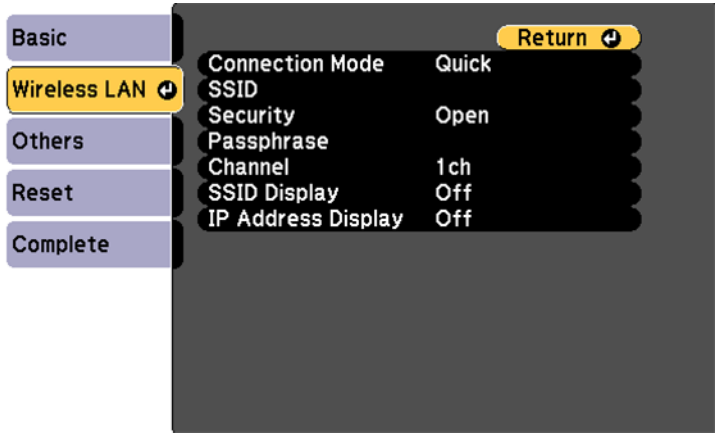

9. Select the settings on the **Wireless LAN** menu as necessary for your network.
10. When you finish selecting settings, select **Complete** and follow the on-screen instructions to save your settings and exit the menus.

After you complete the wireless settings for your projector, you need to select the wireless network on your computer, or iOS or Android device.

Wireless LAN Menu Settings

Parent topic: Wireless Network Projection

Wireless LAN Menu Settings

Setting	Options	Description
Connection Mode	**Quick** **Advanced**	Selects the type of wireless connection: **Quick**: lets you quickly connect to one computer or use the Quick Wireless Connection USB key to connect (ad hoc mode) **Advanced**: lets you connect to multiple computers via a wireless network access point (infrastructure mode)
Search Access Point	**To Search View**	Search for available wireless network access points in **Advanced** connection mode
SSID	Up 32 alphanumeric characters	Sets the SSID (network name) of the wireless LAN system the projector is connecting to

Setting	Options	Description
Security	**Open** **WPA2-PSK** **WPA/WPA2-PSK** **WPA2-EAP** (PowerLite 1781W/1785W/1795F) **WPA/WPA2-EAP** (PowerLite 1781W/1785W/1795F)	Selects the type of wireless security used in the wireless network (some options are only available in **Advanced** connection mode)
Passphrase	Between 8 to 63 alphanumeric characters	Enter a paraphrase for the wireless network
EAP Method (PowerLite 1781W/1785W/1795F)	**EAP Type** **User name** **Password** **Client Certificate** **Verify Server Cert.** **CA certificate** **RADIUS Serv.Name**	Sets the EAP settings for WPA2-EAP and WPA/WPA2-EAP security
Channel	**1ch** **6ch** **11ch**	In **Quick** connection mode, selects the frequency band (channel) used by the wireless LAN
IP Settings	**DHCP** **IP Address** **Subnet Mask** **Gateway Address**	Turns on DHCP if your network assigns addresses automatically; set to **Off** to manually enter the network's **IP Address**, **Subnet Mask**, and **Gateway Address**
SSID Display	**On** **Off**	Selects whether to display the SSID on the network standby screen

Setting	Options	Description
IP Address Display	**On** **Off**	Selects whether to display the IP address on the network standby screen

Parent topic: Selecting Wireless Network Settings Manually

Selecting Wireless Network Settings in Windows

Before connecting to the projector, select the correct wireless network on your computer.

1. To access your wireless utility software, access the Desktop and double-click the network icon on the Windows taskbar.
2. Do one of the following:
   - If your projector is set up on an existing network (Advanced mode), select the network name (SSID).
   - If your projector is configured for Quick mode, select the projector's SSID.
3. Click **Connect**.

Parent topic: Wireless Network Projection

Selecting Wireless Network Settings on Mac

Before connecting to the projector, select the correct wireless network on your Mac.

1. Click the AirPort icon on the menu bar at the top of the screen.
2. Make sure AirPort is turned on, then do one of the following:
   - If your projector is set up on an existing network (Advanced mode), select the network name (SSID).
   - If your projector is configured for Quick mode, select the projector's SSID.

Parent topic: Wireless Network Projection

Using a QR Code to Connect a Mobile Device

After you select the wireless network settings for your projector, you can display a QR code on the screen and use it to connect a mobile device using the Epson iProjection app.

Note: Make sure you have installed the latest version of Epson iProjection on your device. Visit epson.com/iprojection (U.S.) or epson.ca/iprojection (Canada) for more information.

1. Press the **Menu** button.
2. Select the **Network** menu and press **Enter**.

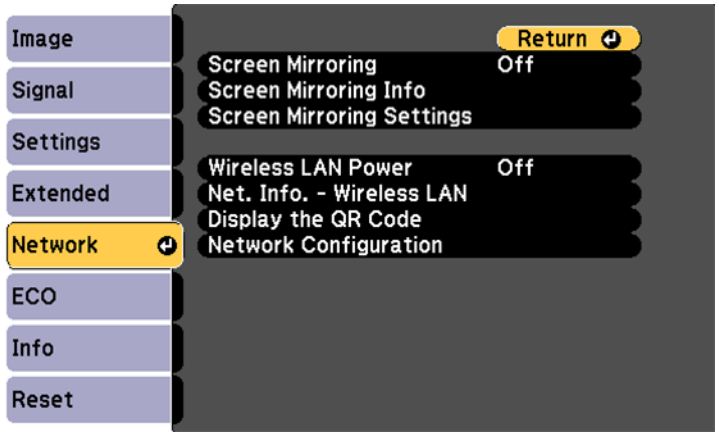

3. Select **Network Configuration** and press **Enter**.
4. Select the **Basic** menu and press **Enter**.

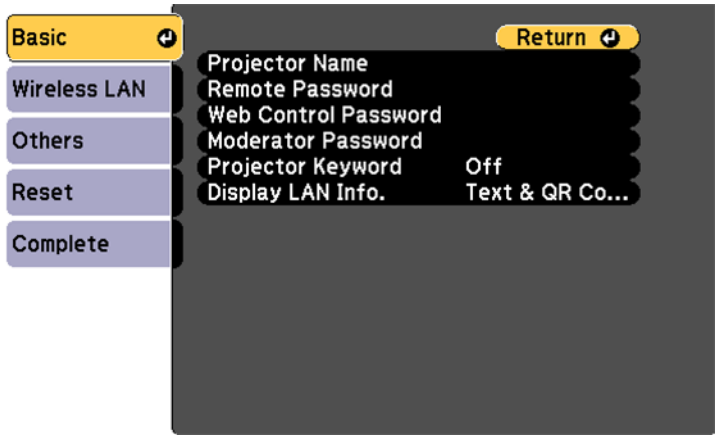

5. Set the **Display LAN Info** setting to **Text & QR Code**.
6. Select **Complete** and follow the on-screen instructions to save your settings and exit the menus.

7. Do one of the following:
   - Press the **LAN** button on the remote control.
   - Select **Display the QR Code** in the projector's Network menu.
   - Press the **Home** button on the remote control and select **Display the QR Code** on the Home screen.

   Your projector displays the QR code on the projection surface.

   Note: If you do not see the QR code after pressing the **LAN** button, press **Enter** to display it.

8. Start Epson iProjection on your mobile device.
9. Use the QR code reader feature to read the QR code and connect your device to the projector. Visit epson.com/iprojection (U.S.) or epson.ca/iprojection (Canada) for instructions.

Parent topic: Wireless Network Projection

Using NFC to Connect an Android Device

After you select the wireless network settings for your projector, you can connect your Android 4.0 or later device to your projector using NFC (Near Field Communication) and the Epson iProjection app (PowerLite 1781W/1785W/1795F).

Note: Make sure your mobile device is unlocked and the NFC reader is activated. See your device manual for details. Make sure you have installed the latest version of Epson iProjection on your device. Visit epson.com/iprojection (U.S.) or epson.ca/iprojection (Canada) for more information.

1. Set the **Auto Power On** setting to **NFC** in the projector's Extended menu.
2. Hold your mobile device close to the NFC tag on your projector.

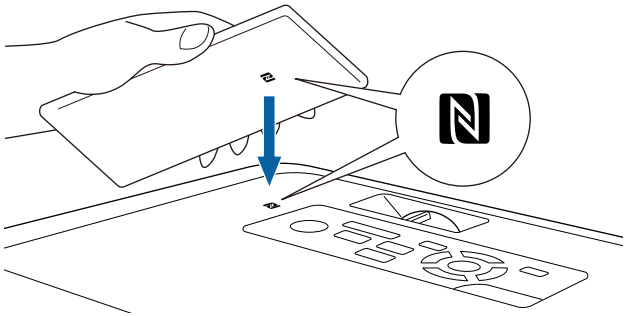

Epson iProjection opens on your mobile device and the projector and device connect automatically.

Note: If you do not have Epson iProjection installed, the app store page for the Epson iProjection app opens on your device. Install Epson iProjection and repeat this step.

3. Select the file you want to project from the Epson iProjection **Contents** menu.

Parent topic: Wireless Network Projection

Setting Up Wireless Network Security

You can set up security for your projector to use on the wireless network. Set up one of the following security options to match the settings used on your network:

- WPA/WPA2-PSK security (Advanced connection mode)
- WPA2-EAP security (Advanced connection mode; PowerLite 1781W/1785W/1795F)
- WPA/WPA2-PSK security (Quick connection mode)
- WPA/WPA2-EAP security (Advanced connection mode; PowerLite 1781W/1785W/1795F)

Check with your network administrator for guidance on entering the correct information.

1. Press the **Menu** button.
2. Select the **Network** menu and press **Enter**.
3. Select **Network Configuration** and press **Enter**.
4. Select the **Wireless LAN** menu and press **Enter**.

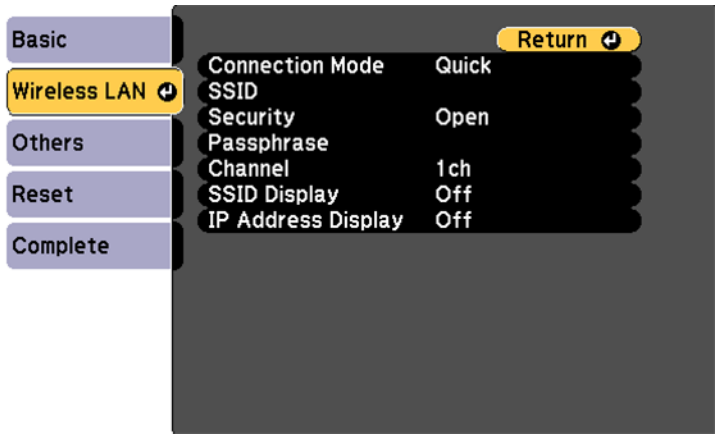

5. Select the **Security** setting and press **Enter**.
6. Select the security settings for your network.
7. When you finish selecting settings, select **Complete** and follow the on-screen instructions to save your settings and exit the menus.

Parent topic: Wireless Network Projection

Wireless Network Projection from a Mobile Device (Screen Mirroring)

You can send images to your projector from mobile devices such as laptops, smartphones, and tablets using Miracast technology or from a Windows computer (PowerLite 1785W/1795F). If your device supports Miracast, you do not need to install any additional software.

Screen Mirroring Restrictions
Selecting Screen Mirroring Settings
Connecting for Screen Mirroring with Miracast
Connecting for Screen Mirroring with a Windows 8.x/Windows 10 Computer

Parent topic: Wireless Network Projection

Screen Mirroring Restrictions

Note the following when using Screen Mirroring features:

- You cannot project an interlaced image.
- You cannot play audio with more than 3 channels.
- You cannot project images with a resolution above 1920 × 1080 and a frame rate above 30 fps.
- You cannot project 3D video.
- You cannot use extended Miracast features on Windows 8.1.
- You may not be able to view contents with copyright protection using a Miracast connection.

Parent topic: Wireless Network Projection from a Mobile Device (Screen Mirroring)

Selecting Screen Mirroring Settings

You can select Screen Mirroring settings for your projector and then project images from your mobile device or computer.

1. Press the **Menu** button.

2. Select the **Network** menu and press **Enter**.

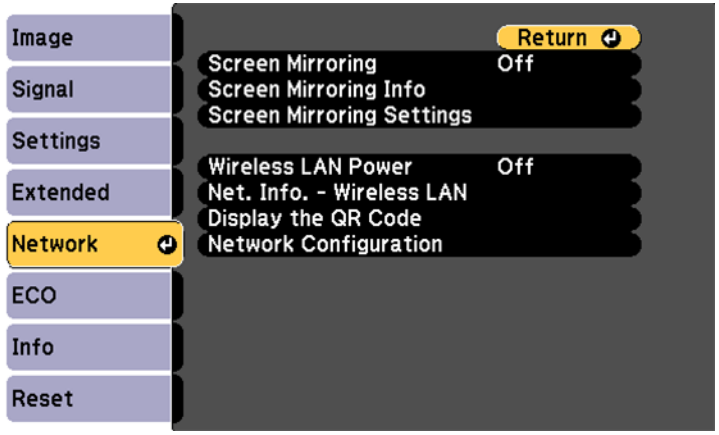

3. Set the **Screen Mirroring** setting to **On**.
4. Select **Screen Mirroring Settings** and press **Enter**.
5. Select the **Screen Mirroring Settings** options as necessary.

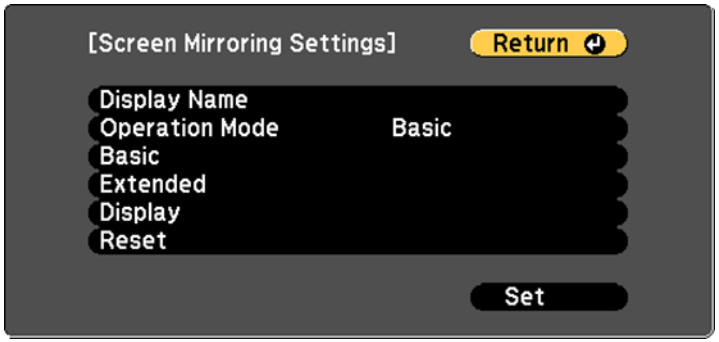

6. When you finish selecting settings, select **Set** and follow the on-screen instructions to save your settings and exit the menus.
7. Press the **Home** button on the control panel or remote control.

   You see the Display Name on the Home screen

Parent topic: Wireless Network Projection from a Mobile Device (Screen Mirroring)

Connecting for Screen Mirroring with Miracast

If your mobile device supports Miracast, you can connect it to the projector wirelessly and project images and sound (PowerLite 1785W/1795F).

1. Select the **Screen Mirroring** settings on your projector as necessary.
2. Press the **LAN** button on the remote control to switch to the Screen Mirroring source.

   You see the Screen Mirroring standby screen.
3. On your mobile device, use the Miracast function to search for the projector.

   Note: See your mobile device's documentation for information on accessing the Miracast function.

   You see a list of available devices.
4. Select your projector from the list.
5. If you see the PIN entry screen on your mobile device, enter the PIN code displayed on the Screen Mirroring standby screen or at the bottom right of the projected image.

   The projector displays the image from your mobile device.

   Caution: It may take some time to establish the connection. Do not disconnect the projector's power cord while it is connecting to your device. Doing so may cause your device to freeze or malfunction.

   Note: Depending on the mobile device, you may need to delete a device when connecting. Follow the on-screen instructions on your device.

Parent topic: Wireless Network Projection from a Mobile Device (Screen Mirroring)

Connecting for Screen Mirroring with a Windows 8.x/Windows 10 Computer

You can set up your computer to wirelessly project images and play sound using Screen Mirroring (PowerLite 1785W/1795F).

1. Select the **Screen Mirroring** settings on your projector as necessary.
2. Press the **LAN** button on the remote control to switch to the Screen Mirroring source.

   You see the Screen Mirroring standby screen.
3. Do one of the following:
   - **Windows 10**: Open **Action Center** and select **Connect**.

- **Windows 8.x**: Select **Devices** > **Project** > **Add a wireless display**.

4. Select your projector's Display Name from the list.
5. If you see the PIN entry screen on your computer, enter the PIN code displayed on the Screen Mirroring standby screen or at the bottom right of the projected image.

   The projector displays the image from your computer or mobile device.

   Note: It may take some time to establish the connection. Do not disconnect the projector's power cord while it is connecting to your device. This may cause your device to freeze or malfunction.

Parent topic: Wireless Network Projection from a Mobile Device (Screen Mirroring)

Secure HTTP

You can use the HTTPS protocol to increase security between the projector and a web browser communicating with it (PowerLite 1781W/1785W/1795F). To do this, you create a server certificate, install it on the projector, and turn on the **Secure HTTP** setting in the projector menus to verify the reliability of the web browser.

Even if you do not install a server certificate, the projector automatically creates a self-signed certificate and allows communication. However, because the self-signed certificate cannot verify reliability from a web browser, you see a warning about the server's reliability when you access the projector from a web browser. This warning does not prevent communication.

Parent topic: Wireless Network Projection

Importing a Web Server Certificate Using the Projector Menus

You can create your web server certificate and import it using the projector menus and a USB flash drive.

Note: You can also register digital certificates from your web browser. Make sure to only register once, or the certificate may not install correctly.

1. Make sure your digital certificate file is compatible with projector registration and saved in the root directory of the USB flash drive.
2. Press the **Menu** button on the projector or remote control.

3. Select the **Network** menu and press **Enter**.

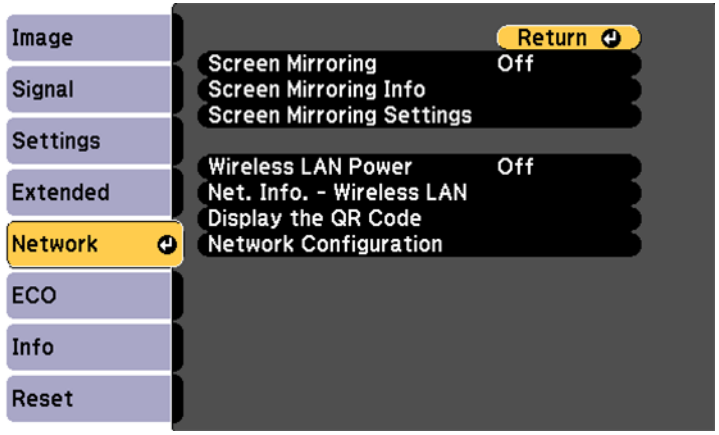

4. Select the **Network Configuration** setting and press **Enter**.
5. Select the **Others** menu and press **Enter**.

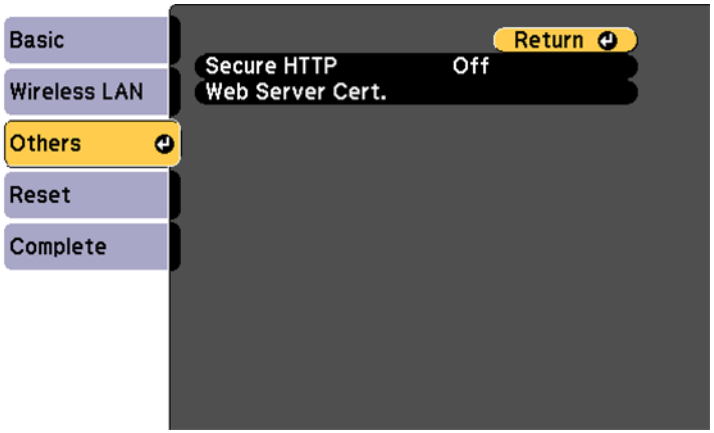

6. Select **On** as the **Secure HTTP** setting.
7. Select the **Web Server Cert.** setting and press **Enter**.
8. Select **Register** and press **Enter**.

9. Follow the on-screen instructions to connect a USB flash drive to the projector's **USB-A** port.
10. Press **Enter** to display the certificate list.
11. Select the certificate you want to import from the displayed list.

    A message is displayed prompting you to enter the password for the certificate.
12. Enter the password and press **Enter**.

The certificate is imported and a completion message appears.

Parent topic: Wireless Network Projection

Controlling a Networked Projector Using a Web Browser

Once you have connected your projector to your network, you can select projector settings and control projection using a compatible web browser. This lets you access the projector remotely.

Note: The web setup and control features support Microsoft Internet Explorer 9.0 or later, and Safari on networks that do not use a proxy server for connection. You cannot select all of the projector menu settings or control all projector functions using a web browser.

1. Make sure the projector is turned on.
2. Start your web browser on a computer or device connected to the network.
3. Type the projector's IP address into the browser's address box and press the computer's **Enter** key.

You see the Web Control screen.

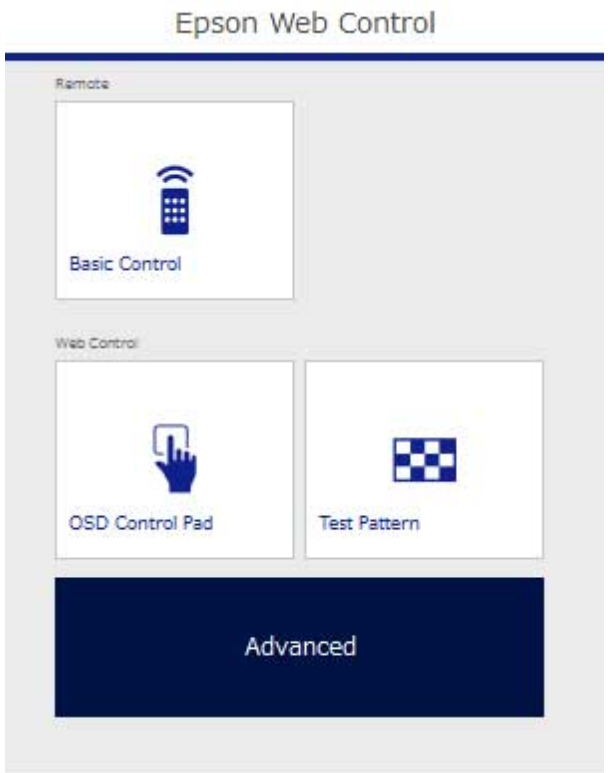

4. To select projector menu settings, select the name of the menu and follow the on-screen instructions.

   Note: You may need to log in to access some of the options on the Web Control screen. If you see a log in window, enter your user name and password. (The default user name is **EPSONWEB** and the default password is **admin**.)

5. To control projection remotely, select the **Basic Control** option.

   Note: If you see a log in window, enter your user name and password. (The default user name is **EPSONREMOTE** and the default password is **guest**.)

You see a screen like this:

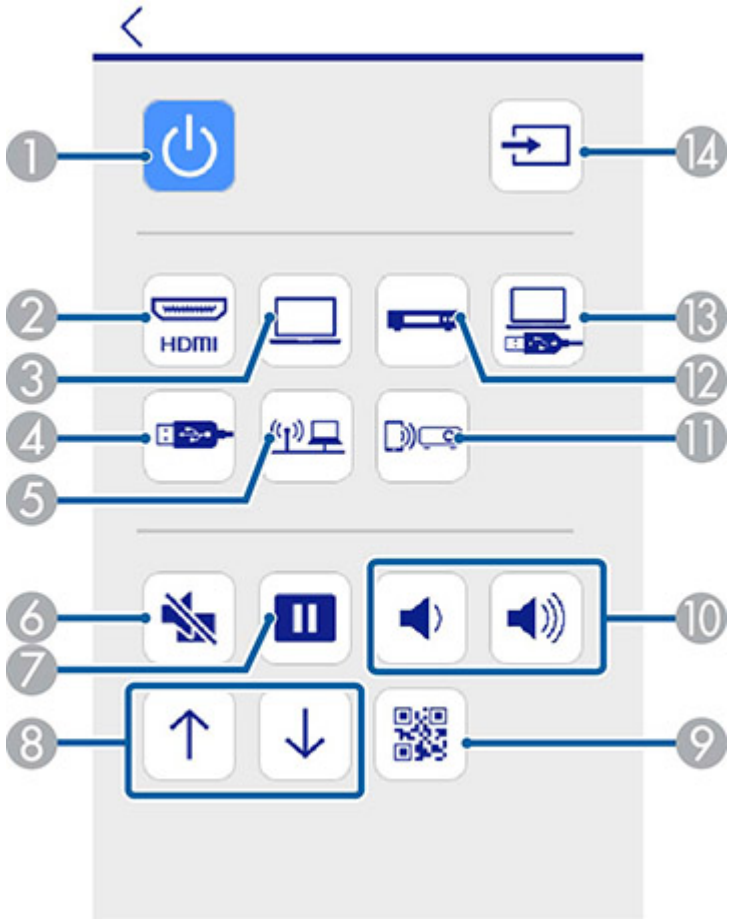

1 Power button control
2 Selects the **HDMI** port source
3 Selects the **Computer** port source
4 Selects the USB device source
5 Selects network source

6 **A/V Mute** button control
7 **Freeze** button control
8 **Page Up** and **Page Down** button controls
9 Displays a QR code
10 **Volume** button controls
11 Selects the Screen Mirroring source (PowerLite 1785W/1795F)
12 Selects the **Video** port source
13 Selects the USB Display source
14 Searches for connected sources

6. Select the icon corresponding to the projector function you want to control.

Parent topic: Using the Projector on a Network

Related references

Projector Setup Settings - ECO Menu

Using Basic Projector Features

Follow the instructions in these sections to use your projector's basic features.

Turning On the Projector
Turning Off the Projector
Selecting the Language for the Projector Menus
Setting the Date and Time
Adjusting the Image Height
Image Shape
Resizing the Image with the Zoom Ring
Focusing the Image Using the Focus Ring
Focusing the Image Using the Focus Button
Remote Control Operation
Selecting an Image Source
Projection Modes
Image Aspect Ratio
Color Mode
Controlling the Volume with the Volume Buttons
Projecting a PC Free Presentation

Turning On the Projector

Turn on the computer or video equipment you want to use before you turn on the projector so it can display the image source.

1. Slide the projector's lens cover until it clicks into the open position.

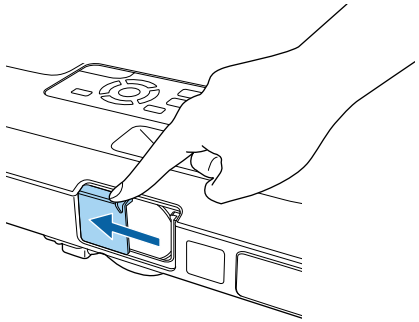

2. Connect the power cord to the projector's power inlet.

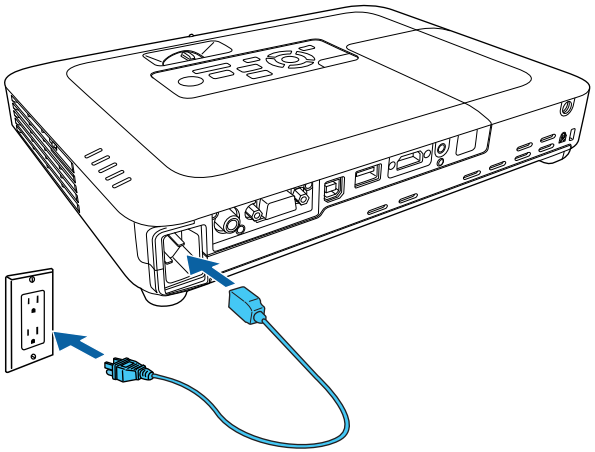

3. Plug the power cord into an electrical outlet.

   Note: With **Direct Power On** turned on, the projector turns on as soon as you plug it in.

   The projector's power light turns blue. This indicates that the projector is receiving power.
4. Press the power button on the projector or the remote control to turn on the projector.

The projector beeps and the Status light flashes blue as the projector warms up. Once the projector is warmed up, the Status light stops flashing and turns blue.

Warning: Never look into the projector lens when the lamp is on. This can damage your eyes and is especially dangerous for children.

If you do not see a projected image right away, try the following:

- Verify the lens cover is open all the way.
- Turn on the connected computer or video device.
- Insert a DVD or other video media and press the play button, if necessary.
- Change the screen output from the computer when using a laptop.
- Press the **Source Search** button on the projector or remote control to detect the video source.
- Press the button for the video source on the remote control.
- If the Home screen is displayed, select the source you want to project.

Using the Home Screen

Parent topic: Using Basic Projector Features

Related tasks
Selecting an Image Source

Using the Home Screen

You can select input sources and other frequently used options from the Home screen.

1. To display the Home screen, do one of the following:
   - Press the **Home** button on the control panel or remote control.
   - Turn on the projector with the **Home Screen Auto Disp** setting enabled.
   - Turn on the projector when no signal is received from the selected input source.

2. Press the arrow buttons on the remote control or control panel to navigate the screen, and press **Enter** to select an option.

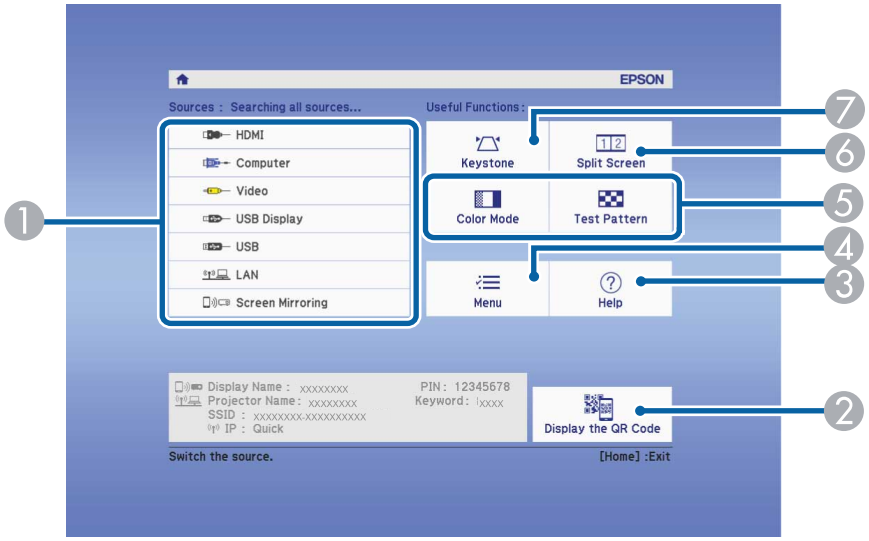

1 Select the video source you want to project

2 Display the QR code

3 Display the Help screen

4 Display the projector's menus

5 Select customizable menu options

6 Project two images from different image sources simultaneously

7 Correct the image shape

Note: You can select the customizable menu options using the **Custom Function 1** and **Custom Function 2** settings in the Extended menu.

3. Press the **Home** button to hide the Home screen.

Parent topic: Turning On the Projector

Turning Off the Projector

Before turning off the projector, shut down any computer connected to it so you can see the computer display during shutdown.

Note: When using the A/V Mute feature, the projector lamp is still on. To turn off the lamp, turn off the projector.

1. Press the power button on the projector or the remote control.

   The projector displays a shutdown confirmation screen.

2. Press the power button again. (To leave it on, press any other button.)

   Note: With Epson's Instant Off technology, there is no cool-down period so you can pack up the projector for transport right away (if necessary).

3. To transport or store the projector, make sure the Status light is off, then unplug the power cord.

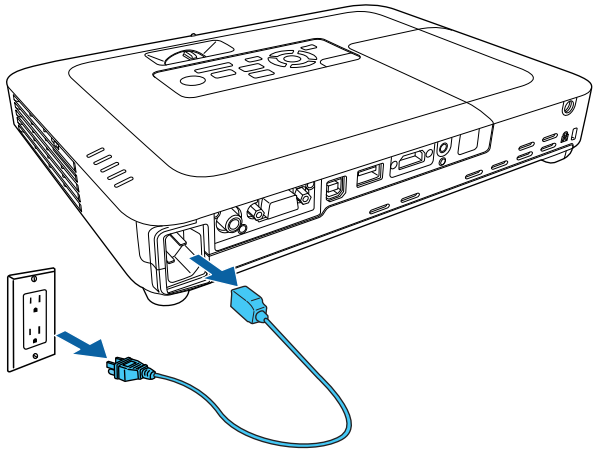

Caution: To avoid damaging the projector or lamp, never unplug the power cord when the Status light is on or flashing.

Parent topic: Using Basic Projector Features

Related references

Projector Light Status

Selecting the Language for the Projector Menus

If you want to view the projector's menus and messages in another language, you can change the Language setting.

1. Turn on the projector.
2. Press the **Menu** button.

3. Select the **Extended** menu and press **Enter**.

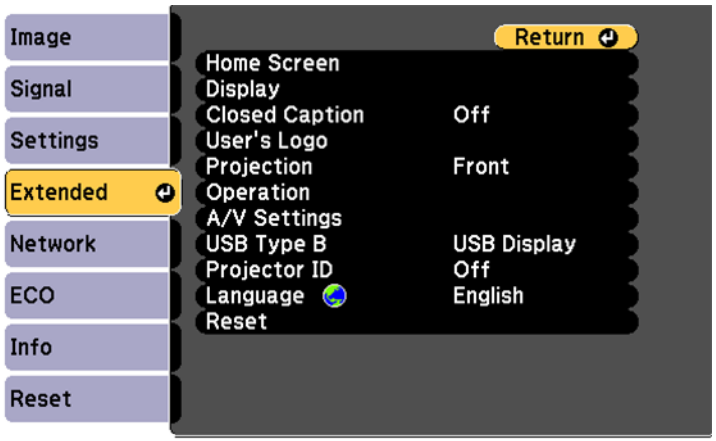

4. Select the **Language** setting and press **Enter**.
5. Select the language you want to use and press **Enter**.
6. Press **Menu** or **Esc** to exit the menus.

Parent topic: Using Basic Projector Features

Setting the Date and Time

You can set the date and time for the projector (PowerLite 1781W/1785W/1795F).

1. Press the **Menu** button.
2. Select the **Extended** menu and press **Enter**.
3. Select the **Operation** setting and press **Enter**.
4. Select the **Date & Time** setting and press **Enter**.

You see a screen like this:

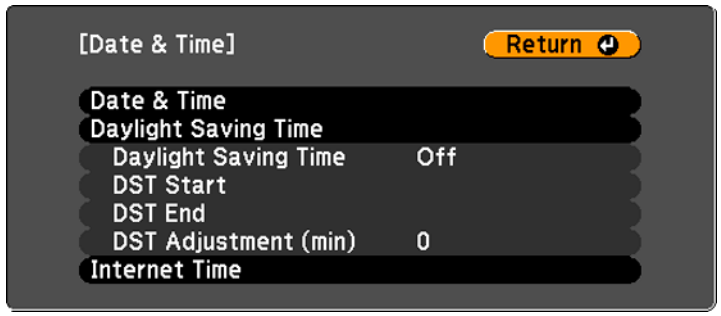

5. Select the **Date & Time** setting and press **Enter**.
6. Select your date and time settings. Then select **Set** and press **Enter** to confirm your changes.
7. When you are finished, press the **Menu** button to exit.

Parent topic: Using Basic Projector Features

Adjusting the Image Height

If you are projecting from a table or other flat surface, and the image is too high or low, you can adjust the image height using the projector's adjustable feet.

1. Turn on the projector and display an image.
2. To adjust the front foot, pull up on the foot release lever and lift the front of the projector.

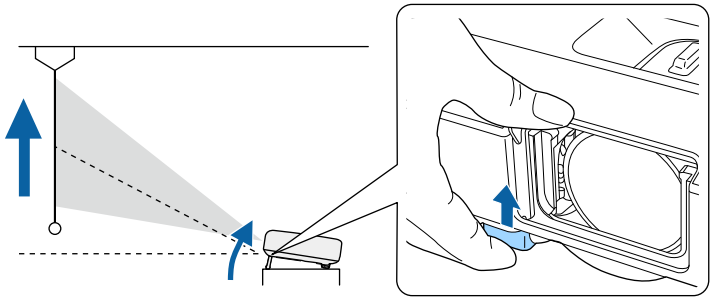

The foot extends from the projector.

3. Release the lever to lock the foot.
4. If the image is tilted, rotate the rear feet to adjust their height.

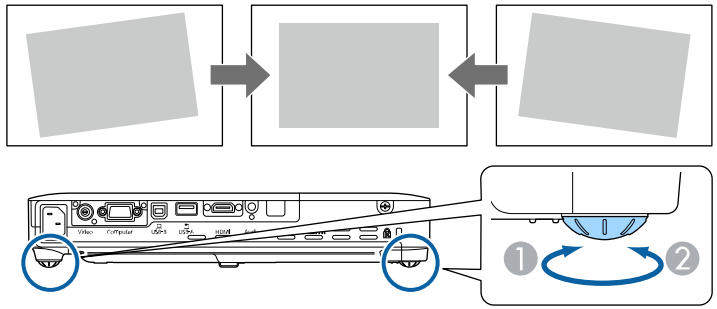

If the projected image is unevenly rectangular, you need to adjust the image shape.

Parent topic: Using Basic Projector Features

Image Shape

You can project an evenly rectangular image by placing the projector directly in front of the center of the screen and keeping it level. If you place the projector at an angle to the screen, or tilted up or down, or off to the side, you may need to correct the image shape for the best display quality.

When you turn on automatic keystone correction in your projector's Settings menu, your projector automatically corrects keystone effects when you reposition the projector. (The PowerLite 1780W automatically corrects vertical keystoning and the PowerLite 1781W/1785W/1795F automatically correct horizontal and vertical keystoning.)

Automatically Correcting Image Shape with Screen Fit

Correcting Image Shape with the Keystone Buttons

Correcting Image Shape with Quick Corner

Parent topic: Using Basic Projector Features

Related references

Projector Feature Settings - Settings Menu

Automatically Correcting Image Shape with Screen Fit

You can use the projector's Screen Fit feature to automatically correct the shape and position of images to fit on your screen (PowerLite 1781W/1785W/1795F).

The projector's sensor can detect the screen size and shape in these conditions:

- Screen size is 100 inches (254 cm) or less
- Projection distance is between 3.4 to 9.10 feet (1.0 to 2.5 m)
- Projection angle is not more than 20º horizontally or 30º vertically away from the center of the screen
- The room is not too dark
- The projection surface is not patterned and does not deflect the sensor in some way

1. Press the **Screen Fit** button on the projector or remote control.

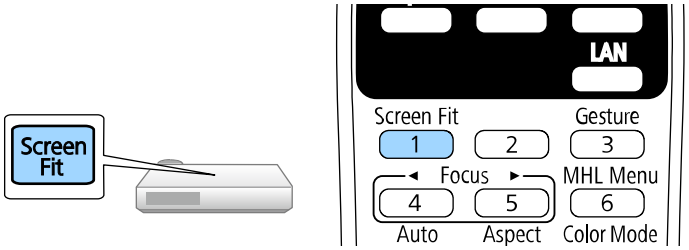

   You see a message on the screen.

2. Move the projector as necessary to display the message in the middle of the screen.
3. Zoom into the image until its yellow frame extends beyond the edges of the screen.

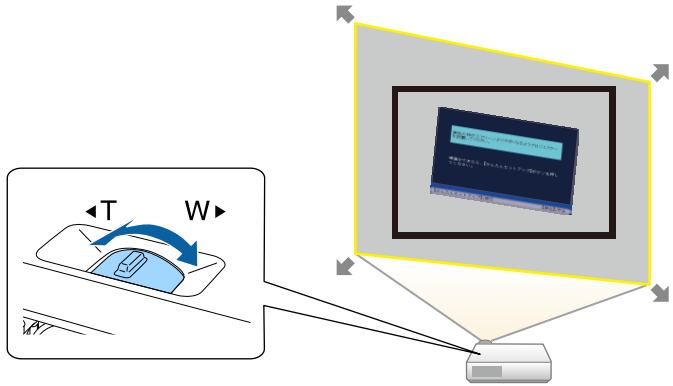

4. Press the **Screen Fit** button again.

Two displays flash briefly, then this message appears:

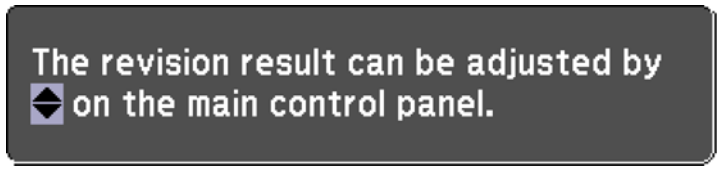

5. Fine-tune the image shape as necessary using the arrow buttons on the control panel.
6. When you are finished, press **Esc**.

Now, if necessary, you can correct the image corners individually using Quick Corner by pressing the arrow buttons on the control panel.

Parent topic: Image Shape

Correcting Image Shape with the Keystone Buttons

You can use the projector's keystone correction buttons to correct the shape of an image that is unevenly rectangular on the sides.

Note: To provide the best possible image quality, adjust the projector's position to correct the image shape. If this isn't possible, use the keystone correction buttons on the projector to correct the image shape.

1. Turn on the projector and display an image.

   Note: You can display a pattern to aid in adjusting the projected image using the Settings menu.

   Note: You can also display the pattern by pressing the **User** button on the remote control (if the test pattern is assigned to this button).

2. Press one of these keystone buttons on the control panel to display the Keystone adjustment screen.

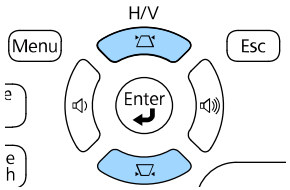

3. Press a keystone button on the projector's control panel to adjust the image shape.

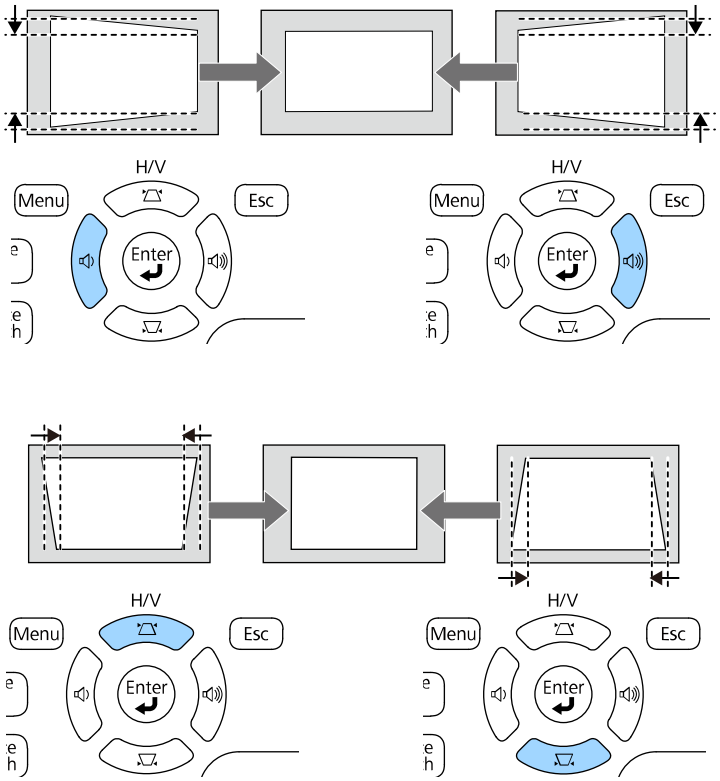

After correction, your image is slightly smaller.

Note: If the projector is installed out of reach, you can also correct the image shape with the remote control using the **Keystone** settings in the projector menus.

Parent topic: Image Shape

Related references

Projector Feature Settings - Settings Menu

Correcting Image Shape with Quick Corner

You can use the projector's Quick Corner setting to correct the shape and size of an image that is unevenly rectangular on all sides.

Note: To provide the best possible image quality, adjust the projector's position to correct the image shape. If this isn't possible, use the Quick Corner setting to correct the image shape.

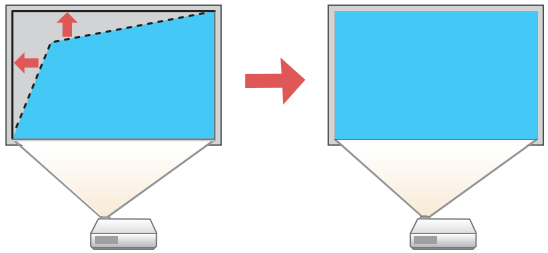

1. Turn on the projector and display an image.

   Note: You can display a pattern to aid in adjusting the projected image using the Settings menu.

   Note: You can also display the pattern by pressing the **User** button on the remote control (if the test pattern is assigned to this button).

2. Press the **Menu** button.

3. Select the **Settings** menu and press **Enter**.

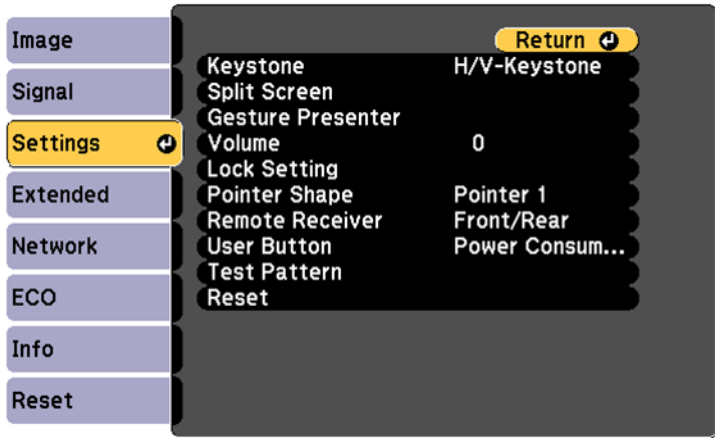

4. Select the **Keystone** setting and press **Enter**.
5. Select the **Quick Corner** setting and press **Enter**. Then press **Enter** again.

   You see the Quick Corner adjustment screen:

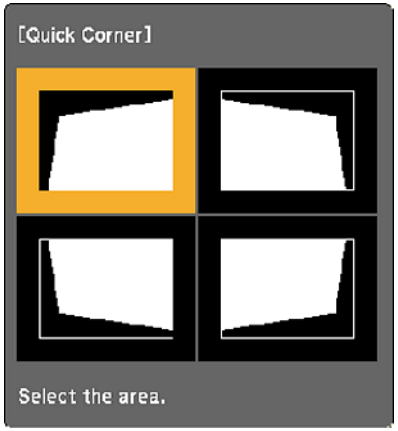

Note: To reset your adjustments, press and hold the **Esc** button for at least 2 seconds to display a reset screen. Then select **Yes**.

6. Use the arrow buttons on the projector or the remote control to select the corner of the image you want to adjust. Then press **Enter**.
7. Press the arrow buttons to adjust the image shape as necessary.
8. When you are finished, press **Esc**.

Parent topic: Image Shape

Resizing the Image with the Zoom Ring

1. Turn on the projector and display an image.

   Note: You can also display the pattern by pressing the **User** button on the remote control (if the test pattern is assigned to this button).

2. To enlarge or reduce the image size, rotate the projector's zoom ring.

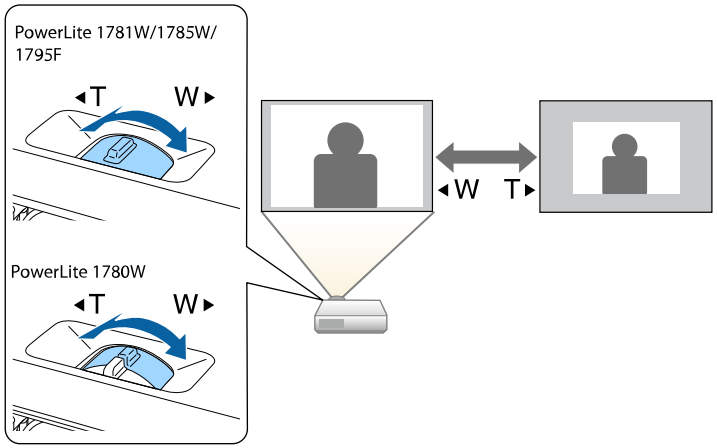

Parent topic: Using Basic Projector Features

Focusing the Image Using the Focus Ring

1. Turn on the projector and display an image.

2. To sharpen the image focus, rotate the projector’s focus ring.

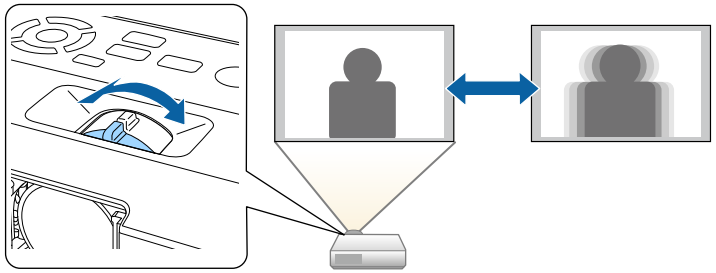

Parent topic: Using Basic Projector Features

Focusing the Image Using the Focus Button

You can adjust the sharpness of the projected image using the focus buttons.

1. Turn on the projector and display an image.
2. Press the **Focus** button on the projector's control panel or remote control.

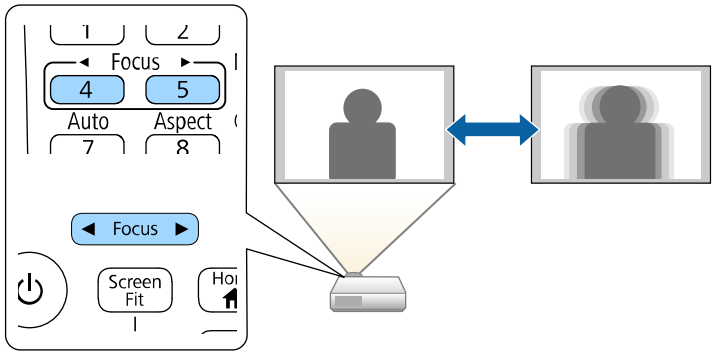

3. Press and hold the arrow buttons on the projector's control panel or remote control to adjust the focus.
4. Press the **Esc** button when finished.

Parent topic: Using Basic Projector Features

Remote Control Operation

The remote control lets you control the projector from almost anywhere in the room. You can point it at the screen, or the front or back of the projector.

Make sure that you aim the remote control at the projector's receivers within the distance and angles listed here.

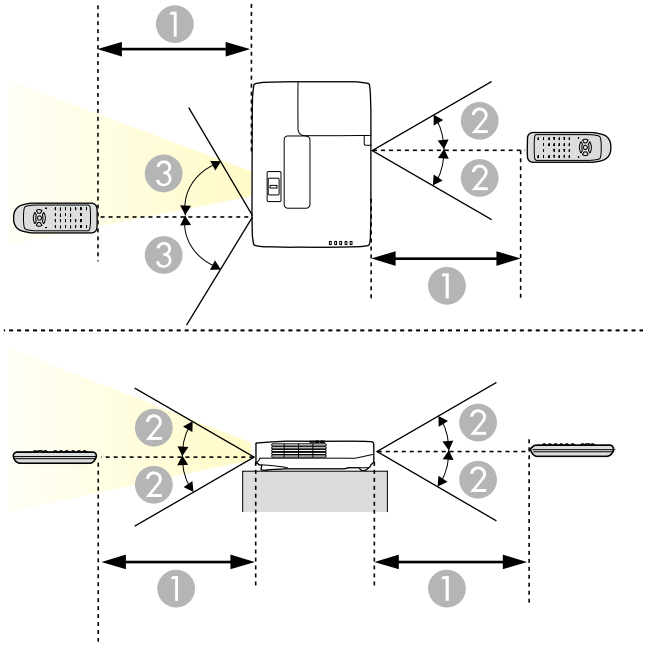

1	19.7 feet (6 m)
2	± 30°
3	± 60°

Note: Avoid using the remote control in conditions with bright fluorescent lights or in direct sunlight, or the projector may not respond to commands. If you will not use the remote control for a long time, remove the batteries.

Using the Remote Control as a Wireless Mouse

Using the Remote Control as a Pointer

Parent topic: Using Basic Projector Features

Using the Remote Control as a Wireless Mouse

You can use the projector's remote control as a wireless mouse so you can control projection at a distance from the computer.

Note: This function does not work when you project from a device connected using an MHL cable.

1. Connect the projector to a computer using the projector's **USB-B**, **Computer**, or **HDMI** port to display video.
2. If you connected your computer to a port other than the projector's **USB-B** port, also connect a USB cable to the projector's **USB-B** port and to a USB port on your computer (for wireless mouse support).
3. Start your presentation.
4. Use the following buttons on the remote control to control your presentation:
   - To move through slides or pages, press the up or down **Page** buttons.

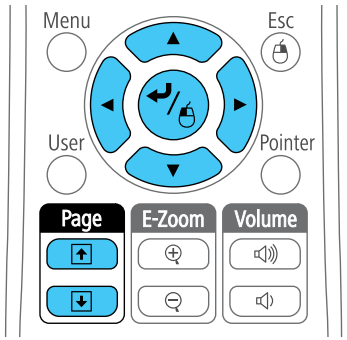

   - To move the cursor on the screen, use the arrow buttons.
   - To left-click, press the ↵ button once (press it twice to double-click).
   - To right-click, press the **Esc** button.
   - To drag-and-drop, hold the ↵ button as you move the cursor with the arrow buttons, then release ↵ at the destination.

Parent topic: Remote Control Operation

Related tasks

Connecting to a Computer for USB Mouse Control

Using the Remote Control as a Pointer

You can use the projector's remote control as a pointer to help you call out important information on the screen. The default pointer shape is an arrow, but you can select an alternative shape using the Settings menu.

1. Press the **Pointer** button on the remote control.

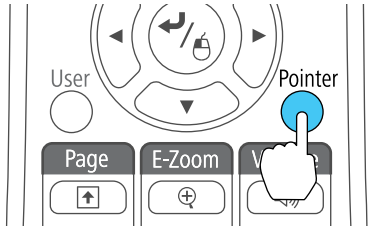

2. Use the arrow buttons on the remote control to move the pointer on the screen.

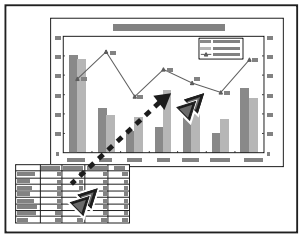

3. Press **Esc** to clear the pointer from the screen.

Parent topic: Remote Control Operation

Related references

Projector Feature Settings - Settings Menu

Selecting an Image Source

If you connected multiple image sources to the projector, such as a computer and DVD player, you may want to switch from one image source to the other.

1. Make sure the connected image source you want to use is turned on.
2. For video image sources, insert a DVD or other video media and press its play button, if necessary.
3. Do one of the following:
   - Press the **Source Search** button on the projector or remote control until you see the image from the source you want.

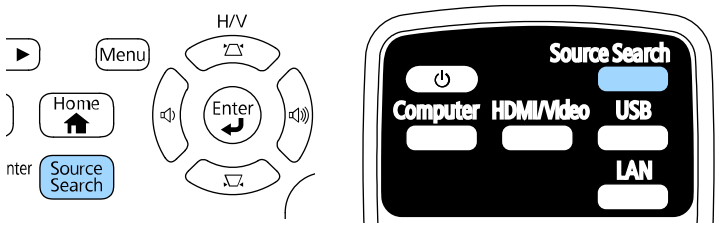

   - Press the button for the source you want on the remote control. If there is more than one port for that source, press the button again to cycle through the sources.

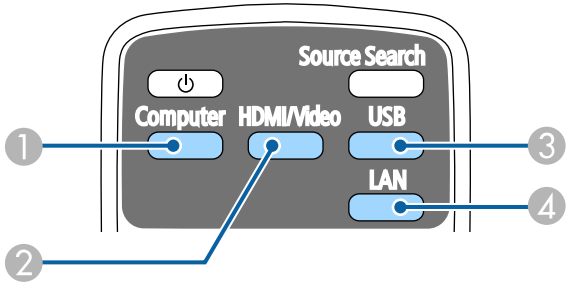

1	Computer port source (**Computer** port)
2	Video, HDMI, and MHL sources
3	USB port sources (computer display and external devices)
4	Network source (**LAN** and Screen Mirroring) (PowerLite 1785W/1795F)

- Press the **Home** button on the remote control or projector and select your image source.

Parent topic: Using Basic Projector Features

Projection Modes

Depending on how you positioned the projector, you may need to change the projection mode so your images project correctly.

- **Front** (default setting) lets you project from a table in front of the screen.
- **Front/Ceiling** flips the image over top-to-bottom to project upside-down from a ceiling or wall mount.
- **Rear** flips the image horizontally to project from behind a translucent screen.
- **Rear/Ceiling** flips the image over top-to-bottom and horizontally to project from the ceiling and behind a translucent screen.

Changing the Projection Mode Using the Remote Control
Changing the Projection Mode Using the Menus

Parent topic: Using Basic Projector Features

Changing the Projection Mode Using the Remote Control

You can change the projection mode to flip the image over top-to-bottom.

1. Turn on the projector and display an image.
2. Hold down the **A/V Mute** button on the remote control for five seconds.

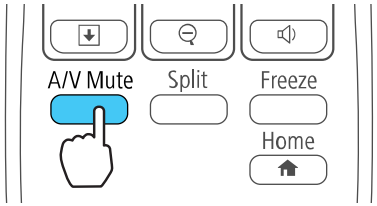

The image disappears briefly and reappears flipped top-to-bottom.

3. To change projection back to the original mode, hold down the **A/V Mute** button for five seconds again.

Parent topic: Projection Modes

Changing the Projection Mode Using the Menus

You can change the projection mode to flip the image over top-to-bottom and/or left-to-right using the projector menus.

1. Turn on the projector and display an image.
2. Press the **Menu** button.
3. Select the **Extended** menu and press **Enter**.

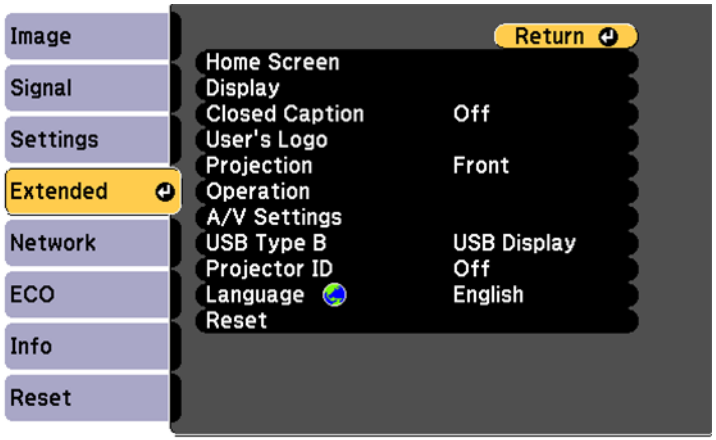

4. Select the **Projection** setting and press **Enter**.
5. Select a projection mode and press **Enter**.
6. Press **Menu** or **Esc** to exit the menus.

Parent topic: Projection Modes

Image Aspect Ratio

The projector can display images in different width-to-height ratios called aspect ratios. Normally the input signal from your video source determines the image's aspect ratio. However, for certain images you can change the aspect ratio to fit your screen by pressing a button on the remote control.

If you always want to use a particular aspect ratio for a certain video input source, you can select it using the projector's menus.

Changing the Image Aspect Ratio

Available Image Aspect Ratios

Parent topic: Using Basic Projector Features

Changing the Image Aspect Ratio

You can change the aspect ratio of the displayed image to resize it.

1. Turn on the projector and switch to the image source you want to use.
2. Press the **Aspect** button on the remote control.

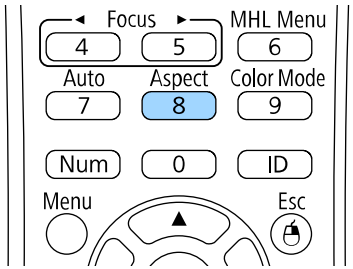

The shape and size of the displayed image changes, and the name of the aspect ratio appears briefly on the screen.

3. To cycle through the available aspect ratios for your input signal, press the **Aspect** button repeatedly.

   Note: To remove black bars when projecting from a computer, set the **Resolution** setting to **Wide** or **Normal** in the Signal menu, depending on your computer's resolution.

Parent topic: Image Aspect Ratio

Related references

Input Signal Settings - Signal Menu

Available Image Aspect Ratios

You can select the following image aspect ratios, depending on the input signal from your image source.

Note: Black bands and cropped images may project in certain aspect ratios, depending on the aspect ratio and resolution of your input signal.

PowerLite 1780W/1781W/1785W

Aspect ratio setting	Description
Auto	Automatically sets the aspect ratio according to the input signal and the **Resolution** setting.
Normal	Displays images using the full projection area and maintains the aspect ratio of the image.
16:9	Converts the aspect ratio of the image to 16:9.
Full	Displays images using the full size of the projection area, but does not maintain the aspect ratio.
Zoom	Displays images using the full width of the projection area and maintains the aspect ratio of the image.
Native	Displays images as is (aspect ratio and resolution are maintained).

PowerLite 1795F

Aspect ratio setting	Description
Auto	Automatically sets the aspect ratio according to the input signal and the **Resolution** setting.

Aspect ratio setting	Description
Normal	Displays images using the full projection area and maintains the aspect ratio of the image.
Full	Displays images using the full projection area, but does not maintain the aspect ratio.
Zoom	Displays images using the full width of the projection area, and maintains the aspect ratio of the image.
Native	Displays images as is (aspect ratio and resolution are maintained).

Note: The **Auto** aspect ratio setting is available only for HDMI image sources.

Parent topic: Image Aspect Ratio

Color Mode

The projector offers different Color Modes to provide optimum brightness, contrast, and color for a variety of viewing environments and image types. You can select a mode designed to match your image and environment, or experiment with the available modes.

If you always want to use a particular color mode for a certain video input source, you can select it using the projector menus.

Changing the Color Mode
Available Color Modes
Turning On Auto Iris

Parent topic: Using Basic Projector Features

Changing the Color Mode

You can change the projector's Color Mode using the remote control to optimize the image for your viewing environment.

1. Turn on the projector and switch to the image source you want to use.
2. If you are projecting from a DVD player or other video source, insert a disc or other video media and press the play button, if necessary.

3. Press the **Color Mode** button on the remote control to change the Color Mode.

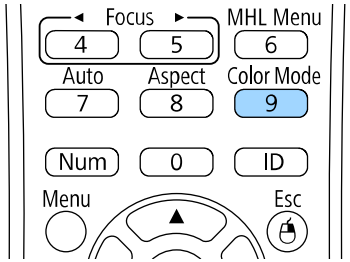

The image appearance changes and the name of the Color Mode appears briefly on the screen.

4. To cycle through all the available Color Modes for your input signal, press the **Color Mode** button repeatedly.

Parent topic: Color Mode

Available Color Modes

You can set the projector to use these Color Modes, depending on the input source you are using:

Color Mode	Description
Presentation	Best for color presentations in a bright room
Dynamic	Best for video games in a bright room
Cinema	Best for movies projected in a dark room
sRGB	Best for standard sRGB computer displays
Blackboard	Best for presentations onto a green chalkboard (adjusts the colors accordingly)
DICOM SIM	Best for projecting X-ray photographs and other medical images

Note: The **DICOM SIM** Color Mode is for reference purposes only and should not be used to make medical diagnoses.

Parent topic: Color Mode

Turning On Auto Iris

In certain color modes, you can turn on the Auto Iris setting to automatically optimize the image based on the brightness of the content you project.

1. Turn on the projector and switch to the image source you want to use.
2. Press the **Menu** button.
3. Select the **Image** menu and press **Enter**.

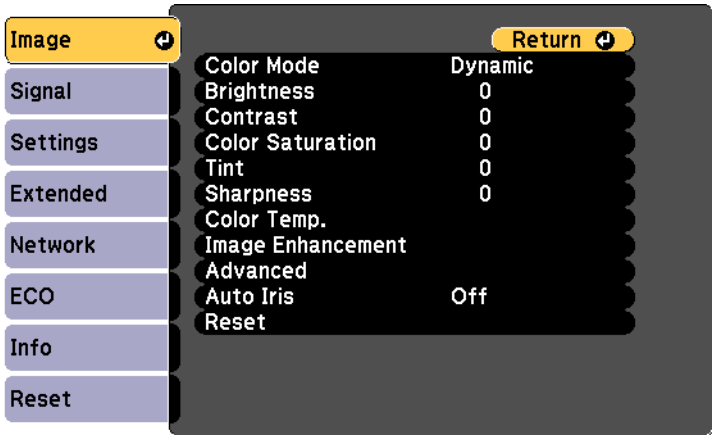

4. Select the **Auto Iris** setting and choose one of the following:
   - **High Speed** to adjust brightness as soon as the scene changes.
   - **Normal** for standard brightness adjustment.

   Note: You can set **Auto Iris** for each Color Mode that supports the feature. You cannot change the **Auto Iris** setting when you are using a **Closed Caption** setting.

5. Press **Menu** or **Esc** to exit the menus.

Parent topic: Color Mode

Related references

Projector Setup Settings - Extended Menu

Controlling the Volume with the Volume Buttons

You can use the **Volume** buttons on the projector or the remote control to adjust the volume as you project a presentation with audio. The volume buttons control the projector's internal speaker system or any external speakers you connected to the projector.

You must adjust the volume separately for each connected input source.

1. Turn on the projector and start a presentation that includes audio.
2. To lower or raise the volume, press the **Volume** buttons on the remote control or control panel.

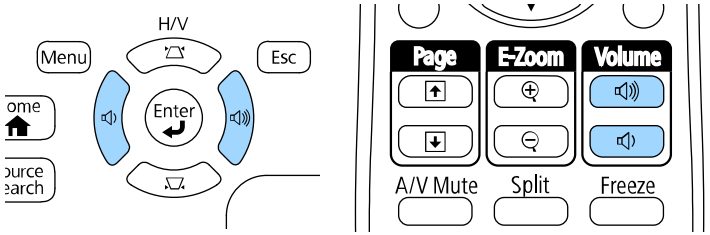

3. To set the volume to a specific level for an input source, use the projector menus.

Parent topic: Using Basic Projector Features

Projecting a PC Free Presentation

You can use your projector's PC Free feature whenever you connect a USB device that contains compatible files. This lets you quickly and easily display the contents of the files and control their display using the projector's remote control.

Supported PC Free File Types
Starting a PC Free Slide Show
Starting a PC Free PDF File Presentation
Starting a PC Free Movie Presentation
PC Free Display Options

Parent topic: Using Basic Projector Features

Supported PC Free File Types

You can project these types of files using the projector's PC Free feature.

Note: For best results, place your files on media that is formatted in FAT16/32. If you have trouble projecting from media formatted for non-Windows file systems, try formatting the media for Windows instead. You may not be able to use the security features on certain USB storage devices with PC Free features. When connecting a USB-compatible hard drive, connect the AC adapter supplied with the drive.

File type and extension	Details
Image (.jpg)	Make sure the file is not: • CMYK format • Progressive format • Highly compressed • Above 8192 × 8192 resolution
Image (.bmp)	Make sure the file resolution is not above 1280 × 800
Image (.gif)	Make sure the file is not: • Above resolution • Animated
Image (.png)	Make sure the file resolution is not above 1280 × 800
Document or image (.pdf)	Make sure the file is not: • Saved in PDF version 1.8 or later format • Encrypted
Motion JPEG movie (.avi)	Supports only AVI 1.0 Make sure the file is not: • Saved with an audio codec other than PCM or ADPCM • Above 1280 × 720 resolution • Larger than 2GB

Parent topic: Projecting a PC Free Presentation

Starting a PC Free Slide Show

After connecting a USB device or digital camera to the projector, you can switch to the USB input source and start your slide show.

Note: You can change the PC Free operation options or add special effects by highlighting **Option** at the bottom of the screen and pressing **Enter**.

1. Press the **USB** button on the projector remote control.

   The PC Free screen appears.

2. Do the following as necessary to locate your files:
   - If you need to display files inside a subfolder on your device, press the arrow buttons to highlight the folder and press the **Enter** button.
   - To move back up a folder level on your device, highlight **Back to Top** and press **Enter**.
   - To view additional files in a folder, highlight **Next page** or **Previous page** and press **Enter**. (You can also press the **Page** up or down buttons on the remote control.)

3. Do one of the following:
   - To display an individual image, press the arrow buttons to highlight the image and press **Enter**. (Press the **Esc** button to return to the file list screen.)
   - To display a slide show of all the images in a folder, press the arrow buttons to highlight the **Slideshow** option at the bottom of the screen and press **Enter**.

   Note: If any file names are longer than 8 characters or include unsupported symbols, the file names may be shortened or changed only in the screen display.

4. While projecting, use the following commands to control the display as necessary:
   - To rotate a displayed image, press the up or down arrow button.
   - To move to the next or previous image, press the left or right arrow button.
5. To stop the display, follow the on-screen instructions or press the **Esc** button.

Parent topic: Projecting a PC Free Presentation

Starting a PC Free PDF File Presentation

After connecting a USB device to the projector, you can switch to the USB input source and start your PDF file presentation (PowerLite 1781W/1785W/1795F).

1. Press the **USB** button on the projector remote control.

The PC Free screen appears.

2. Do the following as necessary to locate your files:
   - If you need to display files inside a subfolder on your device, press the arrow buttons to highlight the folder and press the **Enter** button.
   - To move back up a folder level on your device, highlight **Back to Top** and press **Enter**.
   - To view additional files in a folder, highlight **Next page** or **Previous page** and press **Enter**.
3. To display the first page of a PDF file at full size, press the arrow buttons to highlight the file and press **Enter**. (Press the **Esc** button to return to the file list screen.)

   Note: If any file names are longer than 8 characters or include unsupported symbols, the file names may be shortened or changed only in the screen display. If a PDF file extension is not .pdf, the file does not appear in the file list.

4. While projecting a PDF file, use the following commands to control the display as necessary:
   - To move to the next or previous page, press the up or down arrow button.

- To display a menu of pages to select from, press the **Esc** button. Then press the left or right arrow button to select a page and press **Enter**.
- To enlarge the view of a page to fit the screen, press **Enter**. Press **Enter** again to return to standard size display.
- To rotate a displayed page, press the left or right arrow button.

5. To stop the display, press the **Esc** button, press the up or down arrow button to highlight **EXIT**, and press **Enter**.

Parent topic: Projecting a PC Free Presentation

Starting a PC Free Movie Presentation

After connecting a USB device or digital camera to the projector, you can switch to the USB input source and start your movie.

Note: You can change the PC Free operation options by highlighting **Option** at the bottom of the screen and pressing **Enter**.

1. Press the **USB** button on the projector remote control.

   The PC Free screen appears.

2. Do the following as necessary to locate your files:
   - If you need to display files inside a subfolder on your device, press the arrow buttons to highlight the folder and press the **Enter** button.
   - To move back up a folder level on your device, highlight **Back to Top** and press **Enter**.
   - To view additional files in a folder, highlight **Next page** or **Previous page** and press **Enter**. (You can also press the **Page** up or down buttons on the remote control.)
3. To play back a movie, press the arrow buttons to highlight the file and press **Enter**.

   Note: If any file names are longer than 8 characters or include unsupported symbols, the file names may be shortened or changed only in the screen display. If you want to play back all the movies in a folder in sequence, select the **Slideshow** option at the bottom of the screen.

4. To stop movie playback, press the **Esc** button, highlight **Exit**, and press **Enter**.

Parent topic: Projecting a PC Free Presentation

PC Free Display Options

You can select these display options when using the projector's PC Free feature.

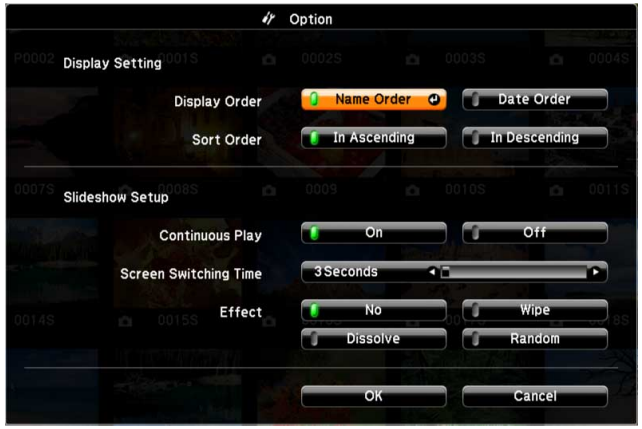

Setting	Options	Description
Display Order	**Name Order**	Displays files in name order
	Date Order	Displays files in date order
Sort Order	**In Ascending**	Sorts files in first-to-last order
	In Descending	Sorts files in last-to-first order
Continuous Play	**On**	Displays a slide show continuously
	Off	Displays a slide show one time through
Screen Switching Time	**No**	Does not display the next file automatically
	1 Second to 60 Seconds	Displays files for the selected time and switches to the next file automatically; high resolution images may switch at a slightly slower rate
Effect	**Wipe**	Transitions between images with a wipe effect
	Dissolve	Transitions between images with a dissolve effect
	Random	Transitions between images using a random variety of effects

Parent topic: Projecting a PC Free Presentation

Adjusting Projector Features

Follow the instructions in these sections to use your projector's feature adjustments.

Shutting Off the Picture and Sound Temporarily
Stopping Video Action Temporarily
Zooming Into and Out of Images
Projector Security Features
Projector Identification System for Multiple Projector Control
Projecting Two Images Simultaneously
Controlling a Presentation Using Hand Gestures

Shutting Off the Picture and Sound Temporarily

You can temporarily turn off the projected picture and sound if you want to redirect your audience's attention during a presentation. Any sound or video action continues to run, however, so you cannot resume projection at the point that you stopped it.

If you want to display an image such as a company logo or picture when the presentation is stopped, you can set up this feature using the projector's menus.

Note: If the picture and sound are off for more than 30 minutes, the power automatically turns off. You can turn this setting on and off using the projector's **ECO** menu.

Note: The lamp is still lit while using A/V Mute and the lamp hours will continue to accumulate.

1. Press the **A/V Mute** button on the remote control to temporarily stop projection and mute any sound.

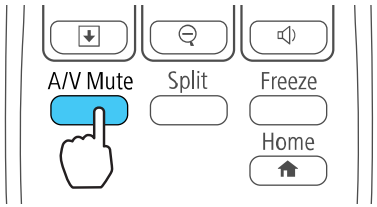

2. To turn the picture and sound back on, press the **A/V Mute** button again.

Note: You can also stop projection using the **A/V Mute** slide lever on the projector.

Parent topic: Adjusting Projector Features

Related references

Projector Setup Settings - ECO Menu

Related tasks

Saving a User's Logo Image to Display

Stopping Video Action Temporarily

You can temporarily stop the action in a video or computer presentation and keep the current image on the screen. Any sound or video action continues to run, however, so you cannot resume projection at the point that you stopped it.

1. Press the **Freeze** button on the remote control to stop the video action.

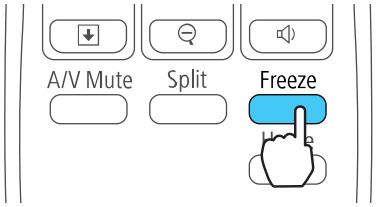

2. To restart the video action in progress, press **Freeze** again.

Parent topic: Adjusting Projector Features

Zooming Into and Out of Images

You can draw attention to parts of a presentation by zooming into a portion of the image and enlarging it on the screen.

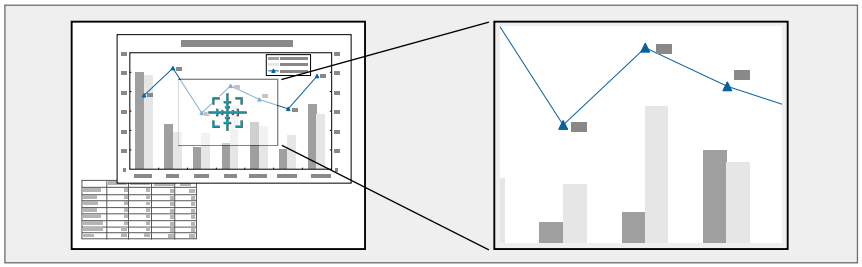

1. Press the **E-Zoom +** button on the remote control.

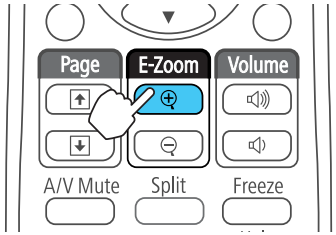

   You see a crosshair on the screen indicating the center of the zoom area.

2. Use the following buttons on the remote control to adjust the zoomed image:
   - Use the arrow buttons to position the crosshair in the image area you want to zoom into.
   - Press the **E-Zoom +** button repeatedly to zoom into the image area, enlarging it as necessary. Press and hold the **E-Zoom +** button to zoom in more quickly.
   - To pan around the zoomed image area, use the arrow buttons.
   - To zoom out of the image, press the **E-Zoom –** button as necessary.
   - To return to the original image size, press **Esc**.

Parent topic: Adjusting Projector Features

Projector Security Features

You can secure your projector to deter theft or prevent unintended use by setting up the following security features:

- Password security to prevent the projector from being turned on, and prevent changes to the startup screen and other settings.
- Button lock security to block operation of the projector using the buttons on the control panel.
- Security cabling to physically cable the projector in place.

Password Security Types
Locking the Projector's Buttons
Installing a Security Cable

Parent topic: Adjusting Projector Features

Password Security Types

You can set up these types of password security using one shared password:

- **Power On Protection** password prevents anyone from using the projector without first entering a password.
- **User's Logo Protection** password prevents anyone from changing the custom screen the projector can display when it turns on or when you use the A/V Mute feature. The presence of the custom screen discourages theft by identifying the projector’s owner.
- **Network Protection** password prevents anyone from changing the network settings in the projector menus.
- **Screen Mirroring Protec.** password prevents anyone from changing the projector's Screen Mirroring settings (PowerLite 1785W/1795F).

Setting a Password
Selecting Password Security Types
Entering a Password to Use the Projector
Saving a User's Logo Image to Display

Parent topic: Projector Security Features

Setting a Password

To use password security, you must set a password.

1. Hold down the **Freeze** button on the remote control for about five seconds or until you see this menu.

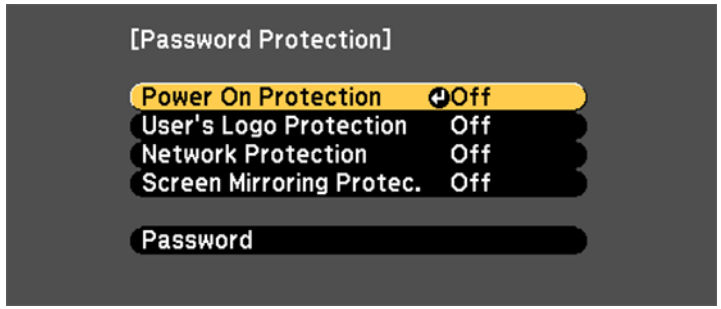

2. Press the down arrow to select **Password** and press **Enter**.

   You see the prompt "Change the password?".
3. Select **Yes** and press **Enter**.
4. Press and hold down the **Num** button on the remote control and use the numeric buttons to set a four-digit password.

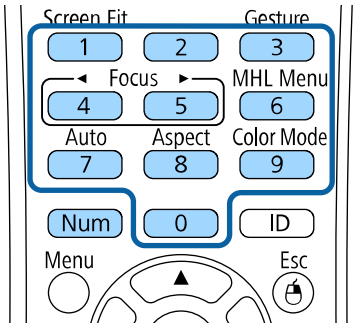

   The password displays as **** as you enter it. Then you see the confirmation prompt.
5. Enter the password again.

   You see the message "Password accepted."
6. Press **Esc** to return to the menu.
7. Make a note of the password and keep it in a safe place in case you forget it.

Parent topic: Password Security Types

Related tasks

Selecting Password Security Types

Selecting Password Security Types

After setting a password, you see this menu, allowing you to select the password security types you want to use.

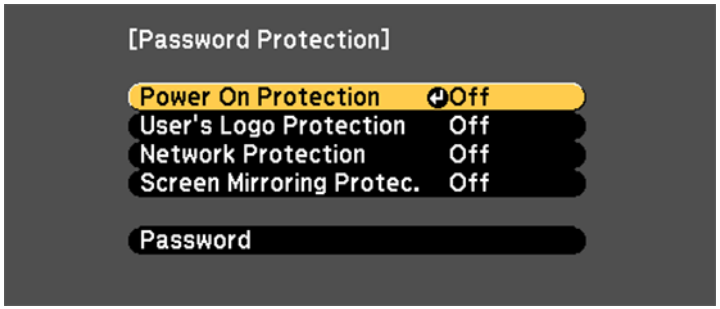

If you do not see this menu, hold down the **Freeze** button on the remote control for about five seconds or until the menu appears.

1. To prevent unauthorized use of the projector, select **Power On Protection**, press **Enter**, select **On**, press **Enter** again, and press **Esc**.
2. To prevent changes to the User's Logo screen or related display settings, select **User's Logo Protection**, press **Enter**, select **On**, press **Enter** again, and press **Esc**.
3. To prevent changes to network settings, select **Network Protection**, press **Enter**, select **On**, press **Enter** again, and press **Esc**.
4. To prevent changes to the projector's Screen Mirroring settings, select **Screen Mirroring Protec.**, press **Enter**, select **On**, press **Enter** again, and press **Esc** (PowerLite 1785W/1795F).

You can attach the Password Protect sticker to the projector as an additional theft deterrent.

Note: Be sure to keep the remote control in a safe place; if you lose it, you will not be able to enter the password required to use the projector.

Parent topic: Password Security Types

Related tasks

Setting a Password

Entering a Password to Use the Projector

If a password is set up and a **Power On Protection** password is enabled, you see a prompt to enter a password whenever you turn on the projector.

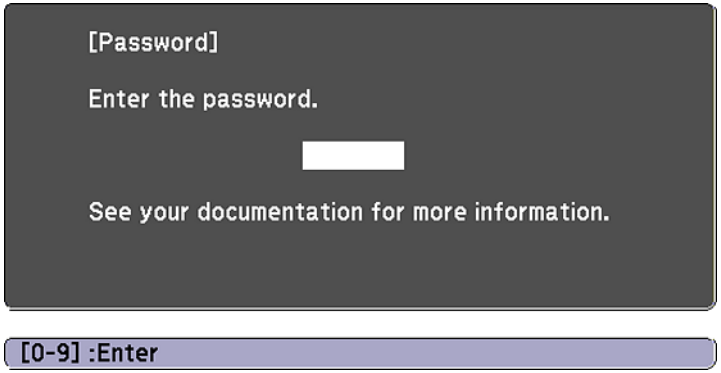

You must enter the correct password to use the projector.

1. Press and hold down the **Num** button on the remote control while you enter the password using the numeric buttons.

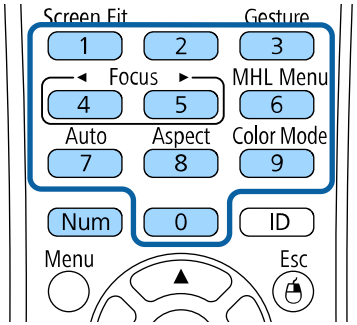

Note: The default password is **0000**.

The password screen closes.

2. If the password is incorrect, the following may happen:
   - You see a "wrong password" message and a prompt to try again. Enter the correct password to proceed.
   - If you enter an incorrect password three times in succession, you see a message telling you that the projector is locked. After the message is displayed for 5 minutes, the projector enters standby mode. Unplug the projector, plug in the power cord, and turn on the projector. You see a prompt to enter the password.
   - If you continue to enter an incorrect password many times in succession, the projector displays a request code and a message to contact Epson Support. Do not attempt to enter the password again. When you contact Epson Support, provide the displayed request code and proof of ownership for assistance in unlocking the projector.

Parent topic: Password Security Types

Related references

Where to Get Help

Saving a User's Logo Image to Display

You can transfer an image to the projector and then display it whenever the projector turns on. You can also display the image when the projector is not receiving an input signal or when you temporarily stop projection (using the A/V Mute feature). This transferred image is called the User's Logo screen.

The image you select as the User's Logo can be a photo, graphic, or company logo, which is useful in identifying the projector's owner to help deter theft. You can prevent changes to the User's Logo by setting up password protection for it.

1. Display the image you want to project as the User's Logo.

2. Press the **Menu** button, select the **Extended** menu, and press **Enter**.

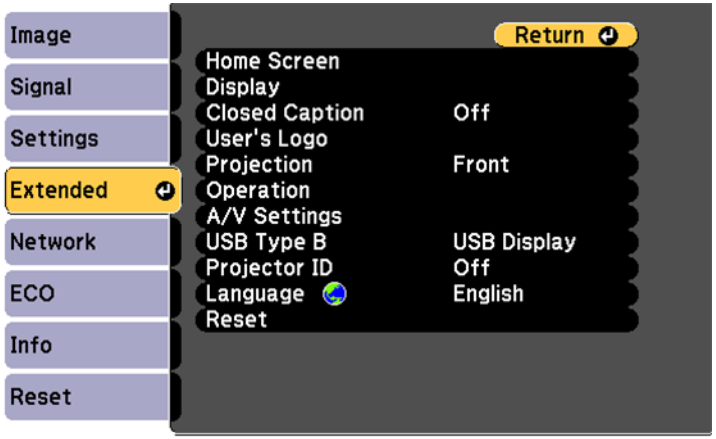

3. Select the **User's Logo** setting and press **Enter**.

   You see a prompt asking if you want to use the displayed image as a user's logo.

4. Select **Yes** and press **Enter**.

   You see a selection box overlaying your image.

   Note: When you select **User's Logo**, adjustments such as **Keystone**, **E-Zoom**, or **Aspect** are temporarily canceled.

5. Use the arrow buttons on the remote control to surround the image area you want to use as the User's Logo and press **Enter**.

   You see a prompt asking if you want to select this image area.

6. Select **Yes** and press **Enter**. (If you want to change the selected area, select **No**, press **Enter**, and repeat the last step.)

You see the User's Logo zoom factor menu.

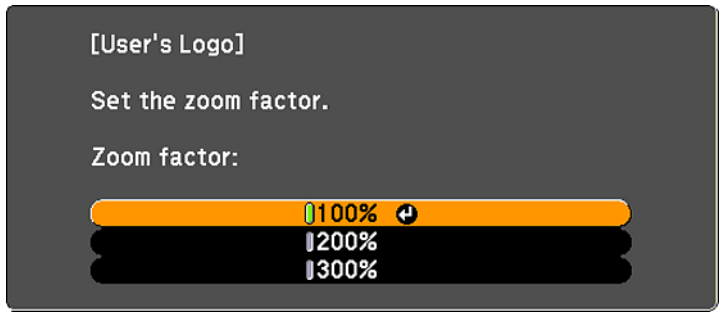

7. Select a zoom percentage and press **Enter**.

   You see a prompt asking if you want to save the image as the User's Logo.
8. Select **Yes** and press **Enter**.

   You see a completion message.
9. Press **Esc** to exit the message screen.
10. Select the **Extended** menu and press **Enter**.
11. Select **Display** and press **Enter**.
12. Select when you want to display the User's Logo screen:
    - To display it whenever there is no input signal, select **Display Background** and set it to **Logo**.
    - To display it whenever you turn the projector on, select **Startup Screen** and set it to **On**.
    - To display it whenever you press the **A/V Mute** button, select **A/V Mute** and set it to **Logo**.

To prevent anyone from changing the User's Logo settings without first entering a password, set a password and enable User's Logo security.

Parent topic: Password Security Types

Locking the Projector's Buttons

You can lock the buttons on the projector's control panel to prevent anyone from using the projector. You can lock all the buttons or all the buttons except the power button.

1. Press the **Menu** button.

2. Select the **Settings** menu and press **Enter**.

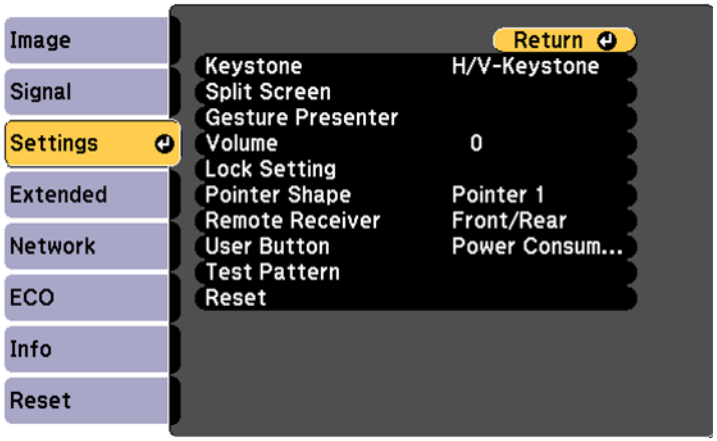

3. Select **Lock Setting** and press **Enter**.
4. Select the **Control Panel Lock** setting and press **Enter**.
5. Select one of these lock types and press **Enter**:
   - To lock all of the projector's buttons, select **Full Lock**.
   - To lock all buttons except the power button, select **Partial Lock**.

   You see a confirmation prompt.
6. Select **Yes** and press **Enter**.

Unlocking the Projector's Buttons

Parent topic: Projector Security Features

Unlocking the Projector's Buttons

If the projector's buttons have been locked, hold the **Enter** button on the projector's control panel for seven seconds to unlock them. You can also set the **Control Panel Lock** setting to **Off** in the Settings menu.

Parent topic: Locking the Projector's Buttons

Installing a Security Cable

You can use the security slot on the back of the projector to attach a Kensington lock. See your local computer or electronics dealer for purchase information.

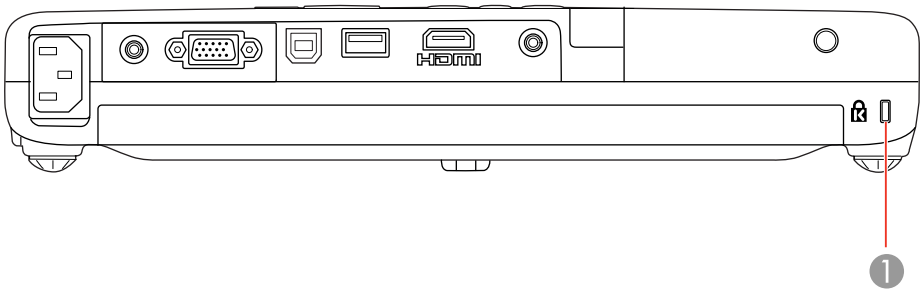

1 Security slot

Parent topic: Projector Security Features

Projector Identification System for Multiple Projector Control

You can operate multiple projectors using one remote control for more elaborate presentations. To do this, you assign an identification number to each projector and to the remote control. Then you can operate all the projectors at once or individually.

Note: In some cases the brightness and color tone from different projectors may not match completely even after color correction. If the brightness and color tone differences become more noticeable over time, repeat the adjustments.

You can also match the colors displayed by any projectors you plan to use near each other.

Setting the Projector ID
Setting the Remote Control ID
Matching Multiple-Projector Display Quality

Parent topic: Adjusting Projector Features

Setting the Projector ID

If you want to control multiple projectors from a remote control, give each projector a unique ID.

1. Press the **Menu** button.
2. Select the **Extended** menu and press **Enter**.
3. Select **Projector ID** and press **Enter**.

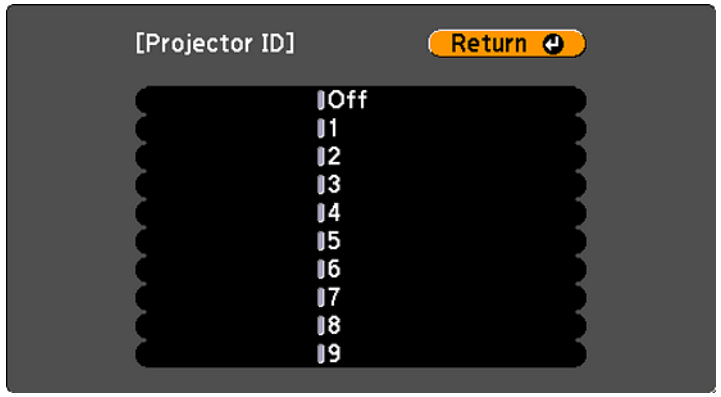

4. Press the arrow buttons on the remote control to select the identification number you want to use for the projector. Then press **Enter**.

Repeat these steps for all the other projectors you want to operate from one remote control.

Note: If you don't know the projector's ID, aim the remote control at the projector and press the **ID** button to temporarily display the projector's ID on the screen.

Parent topic: Projector Identification System for Multiple Projector Control

Setting the Remote Control ID

The remote control's ID is set to zero by default so it can operate any compatible projector. If you want to set the remote control to operate only a particular projector, you need to set the remote control's ID to match the projector's ID.

Note: You must set the remote control ID to match the projector ID each time you turn on the projector you have set it to control.

1. Turn on the projector you want the remote control to operate with exclusively.

2. Make sure you know the projector's ID number as set in the Extended menu **Projector ID** setting.

   Note: If you have forgotten the projector's ID, aim the remote control at the projector and press the **ID** button to temporarily display the projector's ID on the screen. If you turn off the **Projector ID** setting, the remote control will operate the projector regardless of the ID selected on the remote.

3. Aim the remote control at that projector.
4. Hold down the **ID** button on the remote control while you press the numeric button that matches the projector's ID. Then release the buttons.

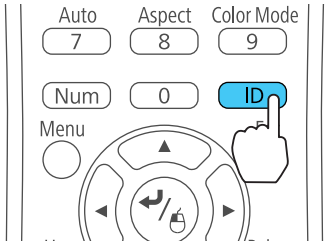

5. Press the **ID** button on the remote control to check if the ID-setting process worked.

   You see a message displayed by the projector.

   - If the remote control is listed as **On**, the remote control ID is set to operate only the listed projector.
   - If the remote control is listed as **Off**, the remote control ID is not set properly. Repeat the steps above to set the ID to match the projector you want to control.

Parent topic: Projector Identification System for Multiple Projector Control

Matching Multiple-Projector Display Quality

You can match the display quality of multiple projectors that will project next to each other.

1. Turn on all the projectors on which you want to match the display quality.
2. Set ID numbers on each projector.
3. Set the remote control ID to match the first projector.

4. Press the **Menu** button, select the **Image** menu, and press **Enter**.

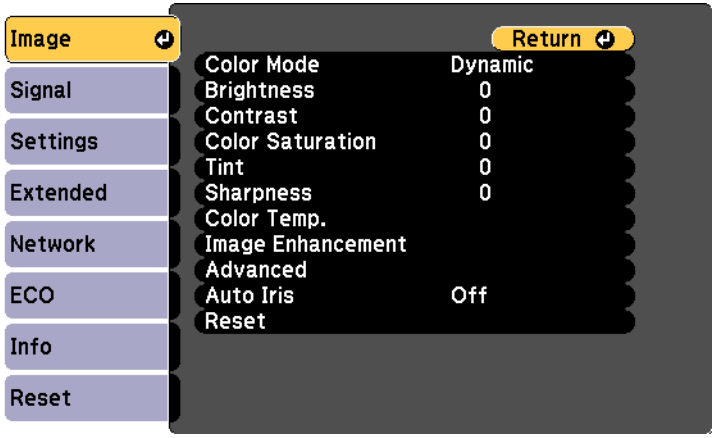

5. Select settings as necessary.
6. Set the remote control ID to match the next projector, then select Image menu adjustments as necessary to match the projectors' displays.

   Note: The brightness and tint may not match exactly even after adjustments. If brightness and tint differences become more noticeable over time, repeat the adjustments.

Parent topic: Projector Identification System for Multiple Projector Control

Projecting Two Images Simultaneously

You can use the split screen feature to simultaneously project two images from different image sources next to each other. You can control the split screen feature using the remote control or the projector menus.

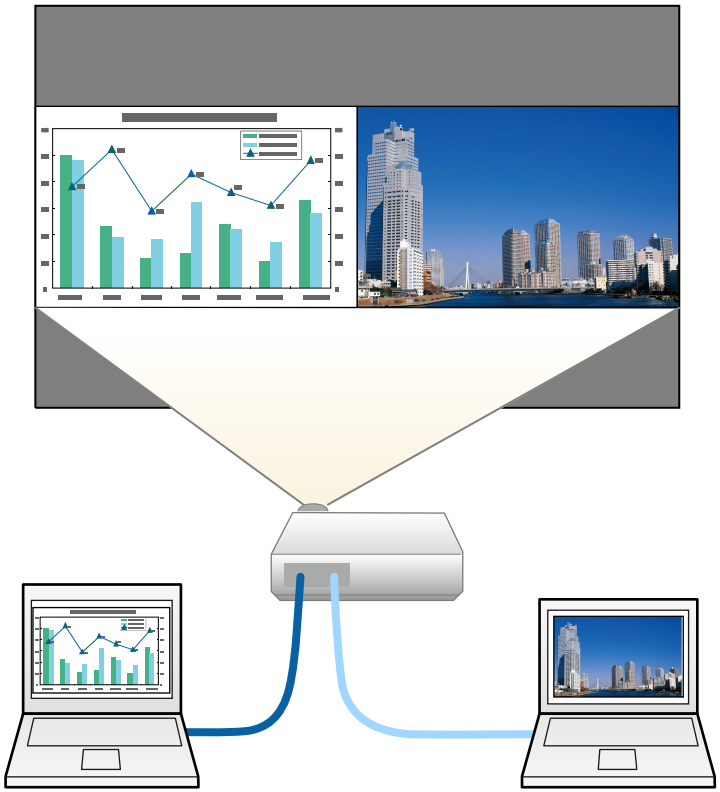

Note: While you use the split screen feature, other projector features may not be available and some settings may be automatically applied to both images.

1. Press the **Split** button on the remote control.

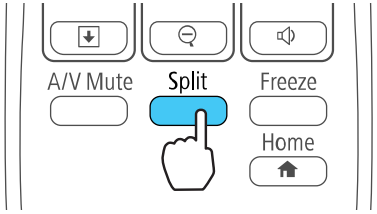

The currently selected input source moves to the left side of the screen.

2. Press the **Menu** button.

   You see this screen:

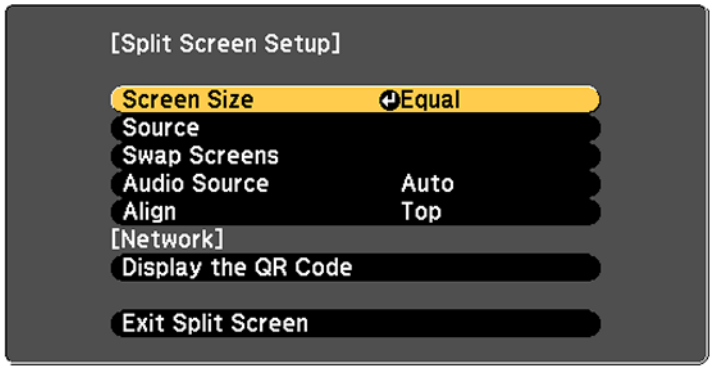

3. To select an input source for the other image, select the **Source** setting, press **Enter**, select the input source, select **Execute**, and press **Enter**. (You can also change image sources, if necessary.)
4. To switch the images, select the **Swap Screens** setting and press **Enter**.
5. To change the image sizes, select the **Screen Size** setting, press **Enter**, select a sizing option, press **Enter**, and press **Menu** to exit.

   Note: Depending on the video input signals, the images may not appear at the same size even if you choose the **Equal** setting.

6. To choose the audio you want to hear, select the **Audio Source** setting, press **Enter**, select an audio option, press **Enter**, and press **Menu** to exit.

   Note: Select **Auto** to hear audio from the largest screen or the left screen.

7. To exit the split screen feature, press the **Split** or **Esc** button.

Parent topic: Adjusting Projector Features

Controlling a Presentation Using Hand Gestures

You can use the projector's Gesture Presenter feature to control a presentation using hand gestures. This lets you give presentations in front of the screen without using the remote control (PowerLite 1785W/1795F).

The Gesture Presenter feature is available only under the following conditions:

- The **Gesture Presenter** setting in the Settings menu is set to **On**.
- The **Projection** setting in the Extended menu is set to **Front** or **Front/Ceiling**.
- Screen size is 100 inches (254 cm) or less
- Projection distance is between 2.1 to 7.3 feet (0.9 to 2.2 m)
- Projection angle is not more than 30º horizontally or 20º vertically away from the center of the screen
- If you are using a Screen Mirroring connection, you selected operation permissions that allow a connected device's keyboard or mouse to control the projector (Windows 10 only)

1. Connect the projector to a computer using a cable or network connection.
2. If you connected your computer to a port other than the projector's **USB-B** port, also connect a USB cable to the projector's **USB-B** port and to a USB port on your computer (for Gesture Presenter support).

   Note: You do not need to connect a USB cable if you are using EasyMP Multi PC Projection or Screen Mirroring to connect your computer to the projector.

3. Turn on the projector and start your presentation.

4. Press the **Gesture** button on the remote control.

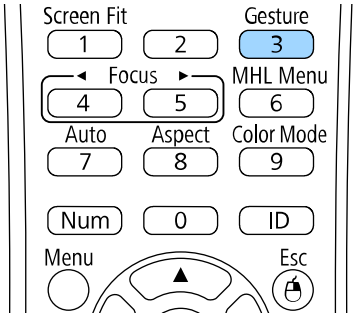

You see the Gesture Presenter settings:

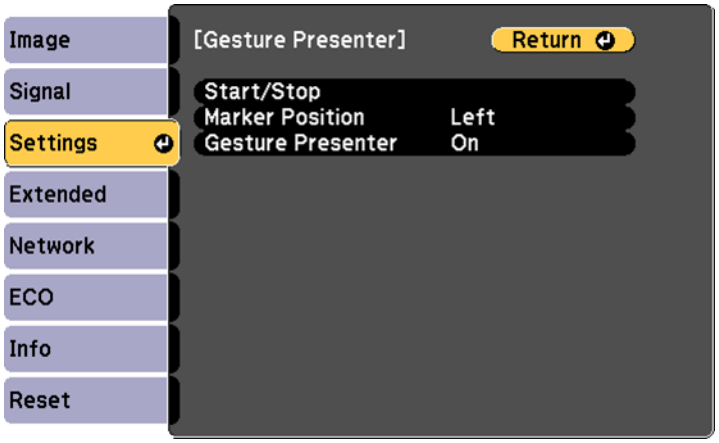

Note: You can also display the Gesture Presenter settings by pressing and holding down the **Screen Fit** button on the projector for three seconds.

5. Select the **Start/Stop** setting and press **Enter**.

You see an adjustment screen with arrows on the bottom left of the screen:

Note: You can change the position of the arrows using the **Marker Position** setting.

6. Do one of the following:
   - To move to the next slide or page, cover the up arrow with your hand
   - To move to the previous slide or page, cover the down arrow with your hand

   Note: When you are not using the arrows, stand away from them to avoid accidentally covering them.

   Note: The arrows are not available for the **Computer**, **Video**, **USB-A**, **LAN** (Epson iProjection), and **Screen Mirroring** input sources.

7. Do one of the following to exit Gesture Presenter:
   - Press the **Gesture** button.
   - Press and hold down the **Screen Fit** button on the projector for three seconds.
   - Select the **Start/Stop** setting.

Parent topic: Adjusting Projector Features

Adjusting the Menu Settings

Follow the instructions in these sections to access the projector menu system and change projector settings.

Using the Projector's Menus
Image Quality Settings - Image Menu
Input Signal Settings - Signal Menu
Projector Feature Settings - Settings Menu
Projector Setup Settings - Extended Menu
Projector Network Settings - Network Menu
Projector Setup Settings - ECO Menu
Projector Information Display - Info Menu
Projector Reset Options - Reset Menu

Using the Projector's Menus

You can use the projector's menus to adjust the settings that control how your projector works. The projector displays the menus on the screen.

1. Press the **Menu** button on the control panel or remote control.

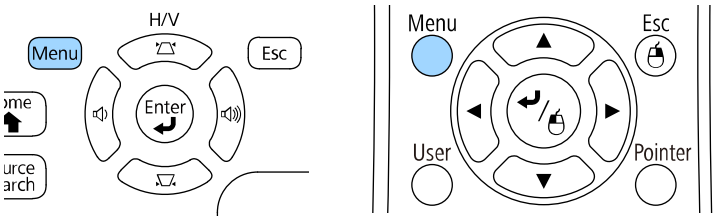

You see the menu screen displaying the Image menu settings.

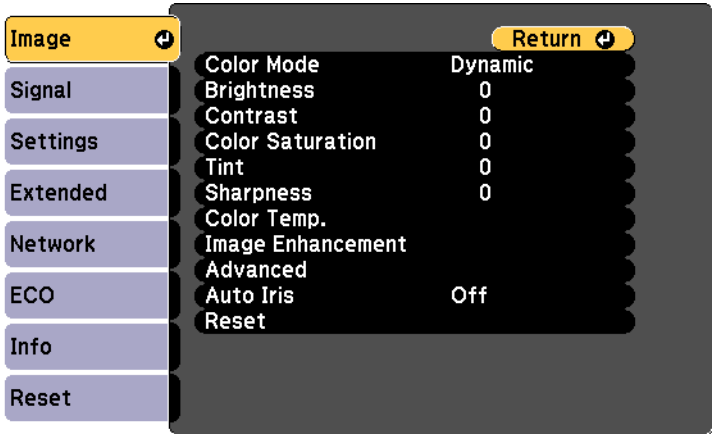

2. Press the up or down arrow button to move through the menus listed on the left. The settings for each menu are displayed on the right.

   Note: The available settings depend on the current input source.

3. To change settings in the displayed menu, press **Enter**.
4. Press the up or down arrow button to move through the settings.
5. Change the settings using the buttons listed on the bottom of the menu screens.
6. To return all the menu settings to their default values, select **Reset**.
7. When you finish changing settings on a menu, press **Esc**.
8. Press **Menu** or **Esc** to exit the menus.

Parent topic: Adjusting the Menu Settings

Image Quality Settings - Image Menu

Settings on the Image menu let you adjust the quality of your image for the input source you are currently using. The available settings depend on the currently selected input source.

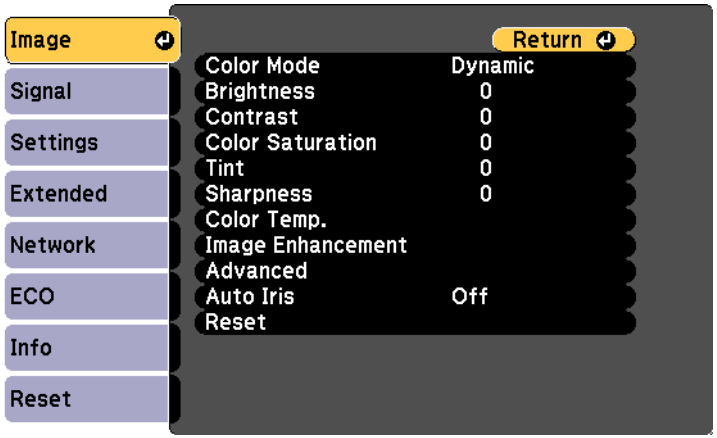

To change settings for an input source, make sure the source is connected and select that source.

Setting	Options	Description
Color Mode	See the list of available Color Modes	Adjusts the vividness of image colors for various image types and environments
Brightness	Varying levels available	Lightens or darkens the overall image
Contrast	Varying levels available	Adjusts the difference between light and dark areas of the image
Color Saturation	Varying levels available	Adjusts the intensity of the image colors
Tint	Varying levels available	Adjusts the balance of green to magenta tones in the image
Sharpness	Varying levels available	Adjusts the sharpness or softness of image details

Setting	Options	Description
Color Temp. (color temperature)	**Color Temp.** **Customized**	Sets the overall color tone; high values tint the image blue and low values tint the image red **Color Temp.**: sets the color tone in a range of 3200 to 10000 °K (Kelvin) for the **sRGB** Color Mode or 0 to 10 for all other Color Modes **Customized**: adjusts the intensity of individual hues in the image
Image Enhancement	**Noise Reduction**	Reduces flickering in analog images in 3 levels
Advanced	**Gamma**	Adjusts the gamma levels of the image
	RGBCMY	Adjusts the hue, saturation, and brightness for each color
	Deinterlacing	Sets whether to convert interlaced to progressive signals for certain video image types **Off**: for fast-moving video images **Video**: for most video images **Film/Auto**: for movies, computer graphics, and animation
Auto Iris	**Off** **Normal** **High Speed**	Adjusts the projected luminance based on the image brightness when the **Dynamic** or **Cinema** Color Modes are selected; **High Speed** sets faster luminance correction for fast-moving images

Note: The **Brightness** setting does not affect lamp brightness. To change the lamp brightness mode, use the **Power Consumption** setting.

Note: The **Noise Reduction** setting is not available if you have set the **Deinterlacing** setting to **Off**, or selected a digital RGB or interlaced (480i/576i/1080i) input signal.

Parent topic: Adjusting the Menu Settings

Related references

Available Color Modes

Projector Setup Settings - ECO Menu

Input Signal Settings - Signal Menu

Normally the projector detects and optimizes the input signal settings automatically. If you need to customize the settings, you can use the Signal menu. The available settings depend on the currently selected input source.

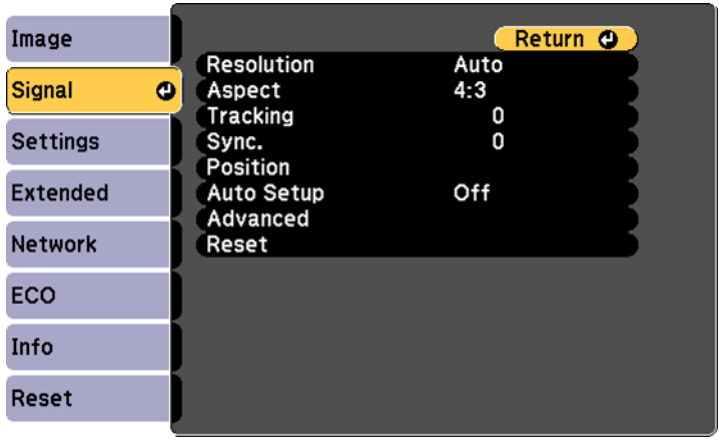

Note: You can restore the default settings of the **Position**, **Tracking**, and **Sync** settings by pressing the **Auto** button on the remote control.

To change settings for an input source, make sure the source is connected and select that source.

Setting	Options	Description
Resolution	**Auto** **Wide** **Normal**	Sets the input signal resolution if not detected automatically using the **Auto** option
Aspect	See the list of available aspect ratios	Sets the aspect ratio (width-to-height ratio) for the selected input source
Tracking	Varying levels available	Adjusts signal to eliminate vertical stripes in computer images
Sync.	Varying levels available	Adjusts signal to eliminate fuzziness or flickering in computer images
Position	Up, down, left, right	Adjusts the image location on the screen
Auto Setup	**On** **Off**	Automatically optimizes computer image quality (when On)
Overscan	**Auto** **Off** **4%** **8%**	Changes the projected image ratio to make the edges visible by a selectable percentage or automatically
Advanced	—	See the **Advanced** settings table in this topic

Advanced settings

Setting	Options	Description
HDMI Video Range	**Auto** **Normal** **Expanded**	Sets the video range to match the setting of the device connected to the HDMI input port **Auto**: detects the video range automatically **Normal**: for images from a device other than a computer; select if the black areas of the image are too bright **Expanded**: for images from a computer; select if the image is too dark
Input Signal	**Auto** **RGB** **Component**	Specifies the signal type from input sources connected to computer ports **Auto**: detects signals automatically **RGB**: corrects color for computer/RGB video inputs **Component**: corrects color for component video inputs
Video Signal	**Auto** Various video standards	Specifies the signal type from the input sources connected to the video ports **Auto**: detects signals automatically

Parent topic: Adjusting the Menu Settings

Projector Feature Settings - Settings Menu

Options on the Settings menu let you customize various projector features. The available settings depend on the currently selected input source.

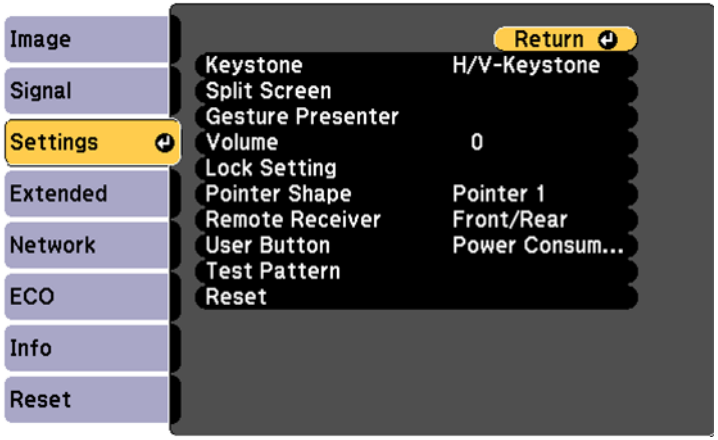

Setting	Options	Description
Keystone	**H/V Keystone** **Quick Corner**	Adjusts image shape to rectangular (horizontally and vertically) **H/V Keystone**: lets you manually correct horizontal and vertical sides; turn on or off automatic correction **Quick Corner**: select to correct image shape and alignment using an on-screen display

Setting	Options	Description
Split Screen	**Screen Size** **Source** **Swap Screens** **Audio Source** **Align** **Display the QR Code**	Divides the viewing area horizontally and displays two images side-by-side (press **Esc** to cancel split screen display)
Gesture Presenter (PowerLite 1785W/1795F)	**Start/Stop** **Marker Position** **Gesture Presenter**	Adjusts the Gesture Presenter options **Start/Stop**: starts or stops the Gesture Presenter function **Marker Position**: sets the marker position to the right or left **Gesture Presenter**: enables or disables the Gesture Presenter feature
Volume	Varying levels available	Adjusts the volume of the projector's speaker system
Lock Setting	**Control Panel Lock**	Controls projector button locking to secure the projector **Full Lock**: locks all buttons **Partial Lock**: locks all buttons except the power button **Off**: no buttons locked
Pointer Shape	Three shapes available	Changes the shape of the remote control pointer feature
Remote Receiver	**Front/Rear** **Front** **Rear** **Off**	Limits reception of remote control signals by the selected receiver; **Off** turns off all receivers

Setting	Options	Description
User Button	**Power Consumption** **Info** **Deinterlacing** **Closed Caption** **Test Pattern** **Resolution** **Multi-Projection** **Display the QR Code**	Assigns a menu option to the **User** button on the remote control for one-touch access
Test Pattern	—	Displays a test pattern to assist in focusing and zooming the image and correcting image shape (press **Esc** to cancel pattern display)

Parent topic: Adjusting the Menu Settings

Projector Setup Settings - Extended Menu

Settings on the Extended menu let you customize various projector setup features that control its operation.

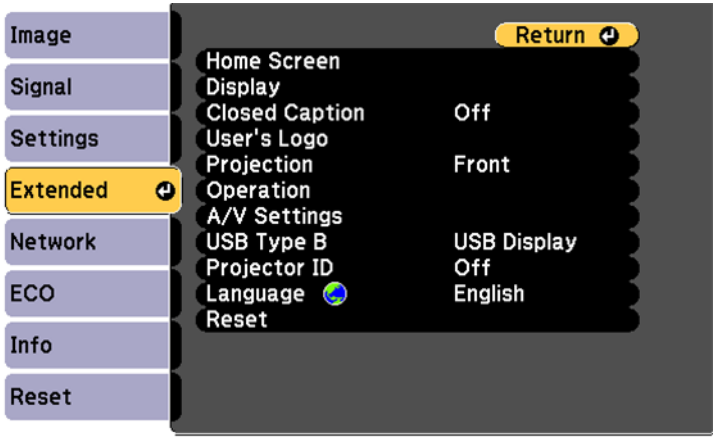

Setting	Options	Description
Home Screen	**Home Screen Auto Disp.** **Custom Function 1** **Custom Function 2**	Select various options for the projector's Home screen **Home Screen Auto Disp.**: controls whether the Home Screen displays automatically when the projector is turned on **Custom Function 1**/**Custom Function 2**: let you customize the options displayed on the Home Screen and save your settings as a preset
Display	**Messages** **Display Background** **Startup Screen** **A/V Mute**	Selects various display options **Messages**: controls whether messages are displayed on the screen **Display Background**: selects the screen color or logo to display when no signal is received **Startup Screen**: controls whether a special screen appears when the projector starts up **A/V Mute**: selects the screen color or logo to display when A/V Mute is turned on
Closed Caption	**Off** **CC1** **CC2**	Controls use of closed captions and selects the closed caption type (closed captions are visible only for NTSC signals connected through the **Video** port)
User's Logo	—	Creates a screen that the projector displays to identify itself and enhance security
Projection	**Front** **Front/Ceiling** **Rear** **Rear/Ceiling**	Selects the way the projector faces the screen so the image is oriented correctly

Setting	Options	Description
Operation	**Direct Power On** **High Altitude Mode** **Auto Source Search** **Auto Power On** **Date & Time** (PowerLite 1781W/1785W/1795F)	Selects various operation options **Direct Power On**: turns on the projector when you plug it in **High Altitude Mode**: regulates the projector's operating temperature at altitudes above 4921 feet (1500 m) **Auto Source Search**: automatically detects the image signal being input when the projector is turned on **Auto Power On**: automatically turns on the projector when it receives an image signal (available only when **Standby Mode** is set to **Communication On**) **Date & Time**: Adjusts the projector's date and time settings
A/V Settings	**HDMI Audio Output**	Selects the audio input port when projecting images from the HDMI ports
USB Type B	**USB Display** **Link21L**	Selects the use of the projector's USB Type B port **USB Display**: select when you connect a computer to the projector's **USB-B** port to display images **Link 21L**: allows a remote Windows computer to operate the projector over a USB connection using the Link 21L Utility
Projector ID	**Off** **1** through **9**	Assigns an ID for the projector when you use multiple projectors
Language	Various languages available	Selects the language for projector menu and message displays (not changed by **Reset** option)

Parent topic: Adjusting the Menu Settings

Projector Network Settings - Network Menu

Settings on the Network menu let you view network information and set up the projector for monitoring and control over a network.

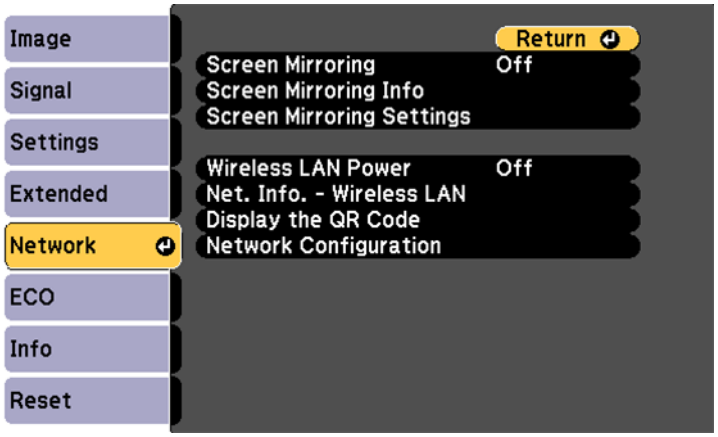

Setting	Options	Description
Screen Mirroring (PowerLite 1785W/1795F)	**On** **Off**	Turns on screen mirroring mode
Screen Mirroring Info (PowerLite 1785W/1795F)	**Display Name** **MAC Address** **Region Code** **Channel** **Connected Device**	Displays screen mirroring status and details
Screen Mirroring Settings (PowerLite 1785W/1795F)	Various screen mirroring options	Configures your screen mirroring settings; only available when **Screen Mirroring** is **On**
Wireless LAN Power	**On** **Off**	Turns on wireless LAN mode

Setting	Options	Description
Net. Info - Wireless LAN	**Connection mode** **Wireless LAN System** **Antenna level** **Projector Name** **SSID** **DHCP** **IP Address** **Subnet Mask** **Gateway Address** **MAC Address** **Region Code**	Displays wireless network status and details
Display the QR Code	—	Displays a QR code for connecting with iOS or Android devices using the Epson iProjection app
Network Configuration	Accesses additional network menus	Configures your network settings

Parent topic: Adjusting the Menu Settings

Projector Setup Settings - ECO Menu

Settings on the ECO menu let you customize projector functions to save power. When you select a power-saving setting, a leaf icon appears next to the menu item.

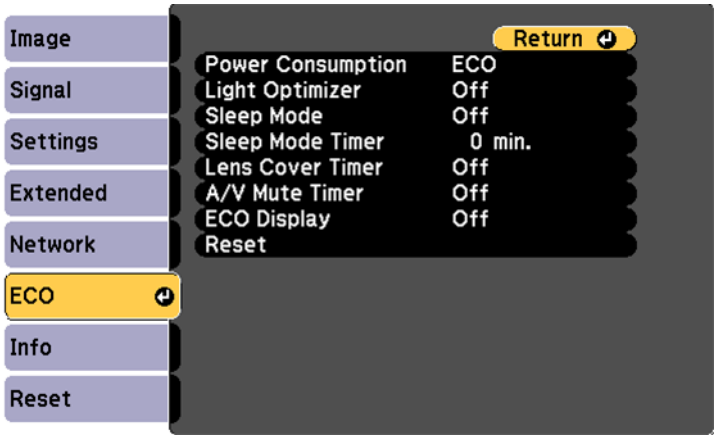

Setting	Options	Description
Power Consumption	**Normal** **ECO**	Selects the brightness mode of the projector lamp **Normal**: sets maximum lamp brightness **ECO**: reduces lamp brightness and fan noise, and saves power and lamp life
Light Optimizer	**On** **Off**	When **Power Consumption** is set to **Normal** and **Auto Iris** is turned off, the lamp brightness is adjusted based on the projected image; you can set this option for each color mode
Sleep Mode	**On** **Off**	Automatically places the projector in standby mode after an interval of inactivity

Setting	Options	Description
Sleep Mode Timer	1 to 30 minutes	Sets the interval for Sleep Mode
Lens Cover Timer	**On** **Off**	Automatically turns off the projector after 30 minutes if the lens cover is closed
A/V Mute Timer	**On** **Off**	Automatically turns off the projector after 30 minutes if **A/V Mute** is enabled
ECO Display	**On** **Off**	Displays a leaf icon in the bottom left corner of the projected screen to indicate the power-saving status when the lamp brightness changes

Parent topic: Adjusting the Menu Settings

Projector Information Display - Info Menu

You can display information about the projector and input sources by viewing the Info menu. However, you cannot change any settings in the menu.

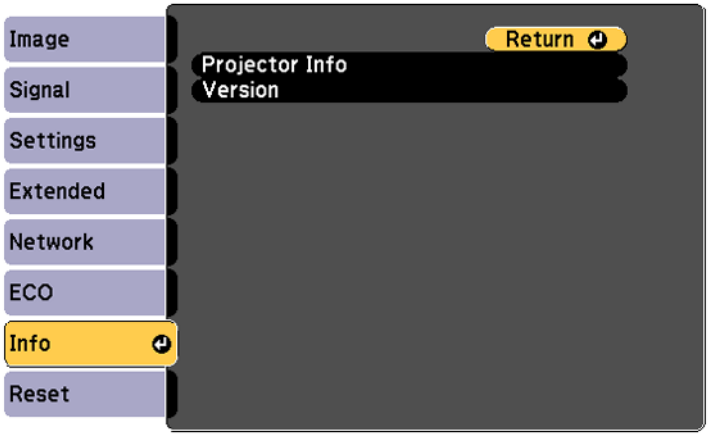

Select **Version** to display the projector's firmware version. Select **Projector Info** to display the settings described below.

Note: Available settings depend on the current input source. The lamp usage timer does not register any hours until you have used the lamp for at least 10 hours.

Information item	Description
Lamp Hours	Displays the number of hours (**H**) the lamp has been used in **Normal** and **ECO** Power Consumption modes; if the information is displayed in yellow, obtain a genuine Epson replacement lamp soon
Source	Displays the name of the port to which the current input source is connected
Input Signal	Displays the input signal setting of the current input source
Resolution	Displays the resolution of the current input source
Video Signal	Displays the video signal format of the current input source
Refresh Rate	Displays the refresh rate of the current input source
Sync Info	Displays information that may be needed by a service technician
Status	Displays information about projector problems that may be needed by a service technician
Serial Number	Displays the projector's serial number
Event ID	Displays the Event ID number corresponding to a specific projector problem; see the list of Event ID codes

Event ID Code List

Parent topic: Adjusting the Menu Settings

Related references

Optional Equipment and Replacement Parts

Projector Lamp Specifications

Event ID Code List

If the **Event ID** option on the Info menu displays a code number, check this list of Event ID codes for the solution to the projector problem associated with the code.

Event ID code	Cause and solution
0020	Screen mirroring communication error occurred. Turn the projector off and then on again, or restart the network software.
0026	
0032	
0036	
0037	
0038	
0021	Screen Mirroring did not start. Turn the projector off and then on again.
0022	Unstable screen mirroring communication. Check the network communication status, wait a few moments, and try connecting to the network again.
0027	
0028	
0029	
0030	
0031	
0035	
0023	Connection failed. If you see the PIN entry screen on your computer, enter the PIN code displayed on the Screen Mirroring standby screen or at the bottom right of the projected image. If this does not solve the problem, restart the projector and connected devices, then check the connection settings.
0024	
0025	
0041	Connection failed. Delete the recorded projector information on your computer and try connecting again.
00432	The network software did not start. Turn the projector off and then on again.
00435	
0433	Cannot display the transferred images. Restart the network software.
0434	Unstable network communication. Check the network communication status, wait a few moments, and try connecting to the network again.
0481	
0482	
0485	

Event ID code	Cause and solution
0483	The network softawre quit unexpectedly. Check the network communication status, then turn the projector off and then on again.
04FE	
0484	Communication with computer was disconnected. Restart the network software.
0479	A projector system error has occurred. Turn the projector off and then on again.
04FF	
0891	Cannot find an access point with the same SSID. Set your computer, access point, and projector to the same SSID.
0892	The WPA/WPA2 authentication type does not match. Make sure the wireless network security settings are correct.
0893	The TKIP/AES encryption type does not match. Make sure the wireless network security settings are correct.
0894	Communication with unauthorized access point was disconnected. Contact your network administrator.
0898	Failed to acquire DHCP address. Make sure the DHCP server is operating correctly. If you are not using DHCP, turn off the **DHCP** setting in the Network menus.
0899	A communication error has occurred.
089A	The EAP authentication type does not match the network. Check the wireless LAN security settings and make sure that the security certificate is installed correctly.
089B	EAP server authentication failed. Check the wireless LAN security settings and make sure that the security certificate is installed correctly.
089C	EAP client authentication failed. Check the wireless LAN security settings and make sure that the security certificate is installed correctly.
089D	Key exchange failed. Check the wireless LAN security settings and make sure that the security certificate is installed correctly.

Parent topic: Projector Information Display - Info Menu

Projector Reset Options - Reset Menu

You can reset most of the projector settings to their default values using the **Reset All Config** option on the Reset menu.

You can also reset the projector's lamp usage timer to zero when you replace the lamp using the **Reset Lamp Hours** option.

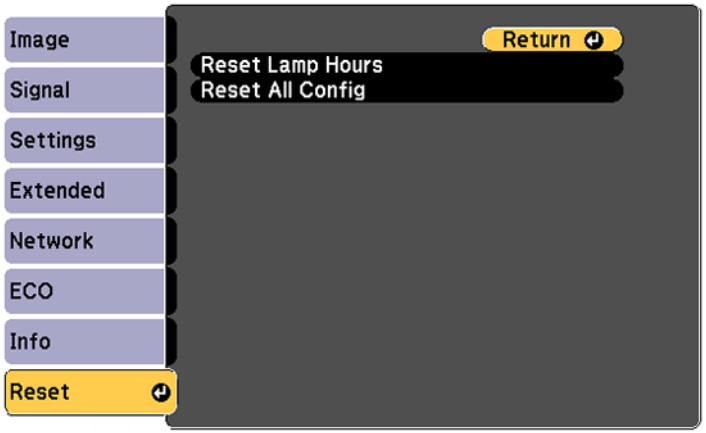

You cannot reset the following settings using the **Reset All Config** option:

- Input Signal
- User's Logo
- Language
- Network menu items
- Lamp Hours
- Password
- Date & Time
- Color Matching
- Display Background
- Startup Screen
- A/V Mute

Parent topic: Adjusting the Menu Settings

Maintaining and Transporting the Projector

Follow the instructions in these sections to maintain your projector and transport it from place to place.

Projector Maintenance
Transporting the Projector

Projector Maintenance

Your projector needs little maintenance to keep working at its best.

You may need to clean the lens periodically, and clean the air filter and air vents to prevent the projector from overheating due to blocked ventilation.

The only parts you should replace are the lamp, air filter, and remote control batteries. If any other part needs replacing, contact Epson or an authorized Epson servicer.

Warning: Before cleaning any part of the projector, turn it off and unplug the power cord. Never open any cover on the projector, except as specifically explained in this manual. Dangerous electrical voltages in the projector can injure you severely.

Warning: Do not try to service this product yourself, except as specifically explained in this manual. Refer all other servicing to qualified servicers.

Cleaning the Lens
Cleaning the Projector Case
Air Filter and Vent Maintenance
Projector Lamp Maintenance
Replacing the Remote Control Batteries

Parent topic: Maintaining and Transporting the Projector

Cleaning the Lens

Clean the projector's lens periodically, or whenever you notice dust or smudges on the surface.

- To remove dust or smudges, gently wipe the lens with lens-cleaning paper.

- To remove stubborn smudges, moisten a soft, lint-free cloth with lens cleaner and gently wipe the lens. Do not spray any liquid directly on the lens.

  Warning: Do not use a lens cleaner that contains flammable gas. The high heat generated by the projector lamp may cause a fire.

  Caution: Do not use glass cleaner or any harsh materials to clean the lens and do not subject the lens to any impacts; you may damage it. Do not use canned air, or the gases may leave a residue. Avoid touching the lens with your bare hands to prevent fingerprints on or damage to the lens surface.

Parent topic: Projector Maintenance

Cleaning the Projector Case

Before cleaning the projector case, turn off the projector and unplug the power cord.

- To remove dust or dirt, use a soft, dry, lint-free cloth.
- To remove stubborn dirt, use a soft cloth moistened with water and mild soap. Do not spray liquid directly on the projector.

  Caution: Do not use wax, alcohol, benzine, paint thinner, or other chemicals to clean the projector case. These can damage the case. Do not use canned air, or the gases may leave a residue.

Parent topic: Projector Maintenance

Air Filter and Vent Maintenance

Regular filter maintenance is important to maintaining your projector. Your Epson projector is designed with an easily accessible, user-replaceable filter to protect your projector and make regular maintenance simple. Filter maintenance intervals will depend on the environment.

If regular maintenance is not performed, your Epson projector will notify you when the temperature inside the projector has reached a high level. Do not wait until this warning appears to maintain your projector filter as prolonged exposure to high temperatures may reduce the life of your projector or lamp.

Damage due to the failure to properly maintain the projector or its filter may not be covered by the projector or lamp Limited Warranties.

Cleaning the Air Filter and Vents
Replacing the Air Filter

Parent topic: Projector Maintenance

Related references

Projector Light Status

Cleaning the Air Filter and Vents

Clean the projector's air filter or vents if they get dusty, or if you see a message telling you to clean them.

1. Turn off the projector and unplug the power cord.
2. Gently remove the dust using a small vacuum designed for computers or a very soft brush (such as a paintbrush).

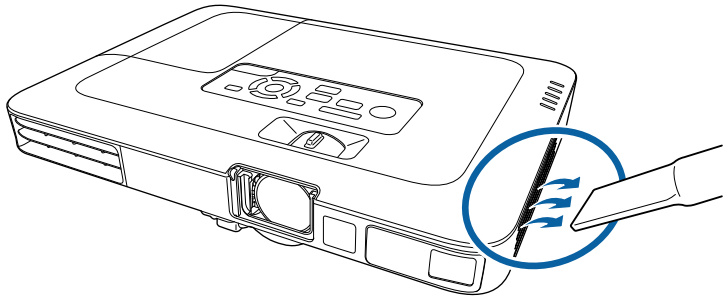

Note: You can remove the air filter so you can clean both sides of it. Do not rinse the air filter in water, or use any detergent or solvent to clean it.

Caution: Do not use canned air. The gases may leave a flammable residue or push dust and debris into the projector's optics or other sensitive areas.

3. If dust is difficult to remove or the air filter is damaged, replace the air filter.

Parent topic: Air Filter and Vent Maintenance

Replacing the Air Filter

You need to replace the air filter in the following situations:

- After cleaning the air filter, you see a message telling you to clean or replace it
- The air filter is torn or damaged

You can replace the air filter while the projector is mounted to the ceiling, if necessary.

1. Turn off the projector and unplug the power cord.

2. Grasp the tab at the center of the air filter and pull it out of the projector.

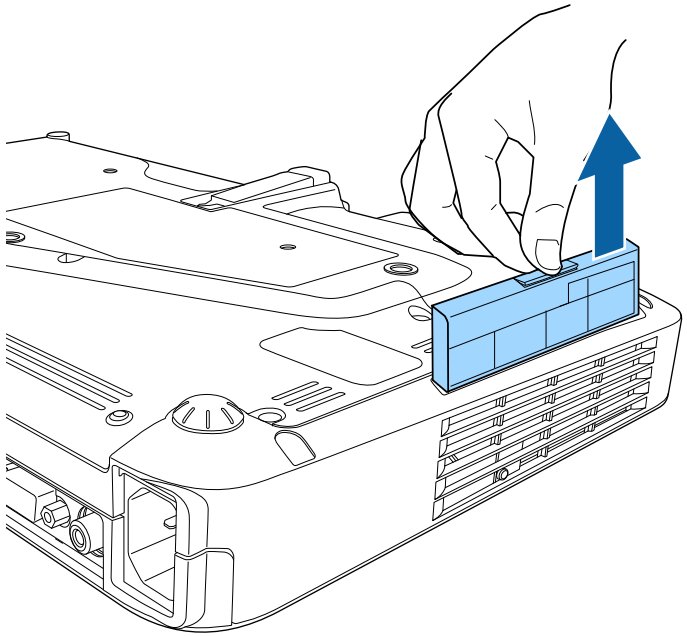

Note: Air filters contain polycarbonate, ABS resin, and polyurethane foam. Dispose of used air filters according to local regulations.

3. Place the new air filter in the projector as shown and push gently until it clicks into place.

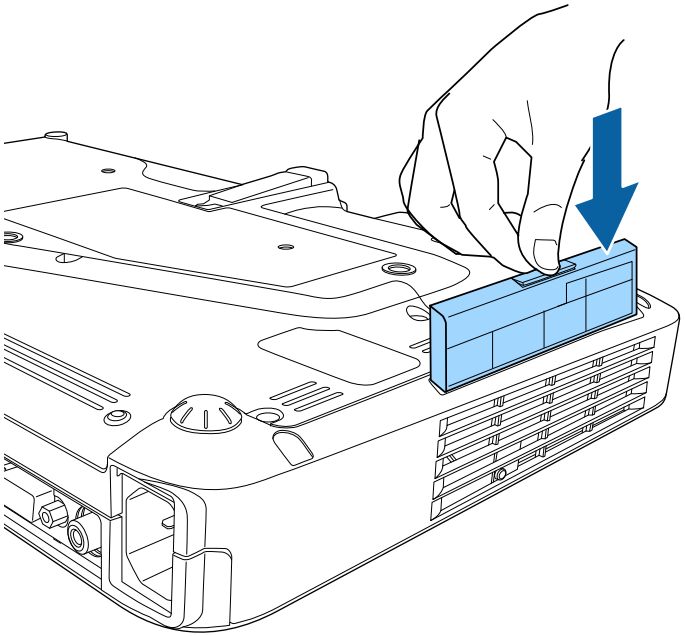

Parent topic: Air Filter and Vent Maintenance

Related references

Optional Equipment and Replacement Parts

Projector Lamp Maintenance

The projector keeps track of the number of hours the lamp is used and displays this information in the projector's menu system.

Replace the lamp as soon as possible when the following occurs:

- The projected image gets darker or starts to deteriorate
- A message appears when you turn on the projector telling you to replace the lamp
- The projector's On/Standby light is flashing blue and its Lamp light is flashing orange

Replacing the Lamp

Resetting the Lamp Timer

Parent topic: Projector Maintenance

Related references

Projector Light Status

Projector Information Display - Info Menu

Replacing the Lamp

Before you replace the lamp, let the projector cool down for at least one hour so the lamp will not be hot.

Warning: Let the lamp fully cool before replacing it to avoid injury.

You can replace the lamp while the projector is mounted to the ceiling, if necessary.

1. Turn off the projector and unplug the power cord.
2. Allow the projector lamp to cool down for at least one hour.
3. Use the screwdriver included with the replacement lamp to loosen the screw securing the lamp cover.

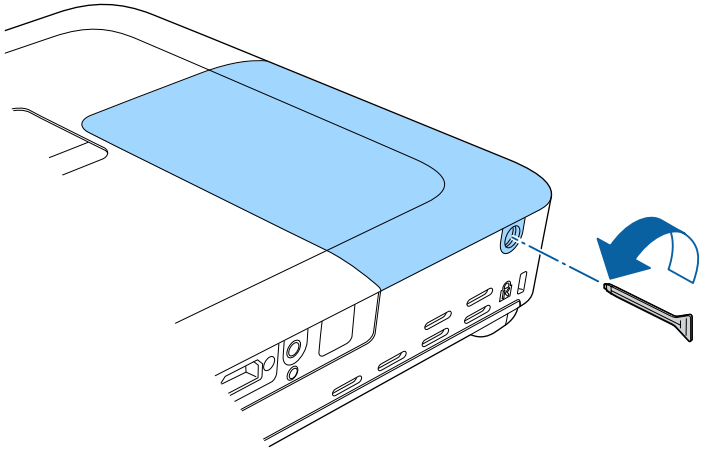

Warning: If the lamp is broken, glass fragments may be loose inside the lamp chamber. Be careful removing any broken glass to avoid injury.

4. Slide the lamp cover out and lift it off.

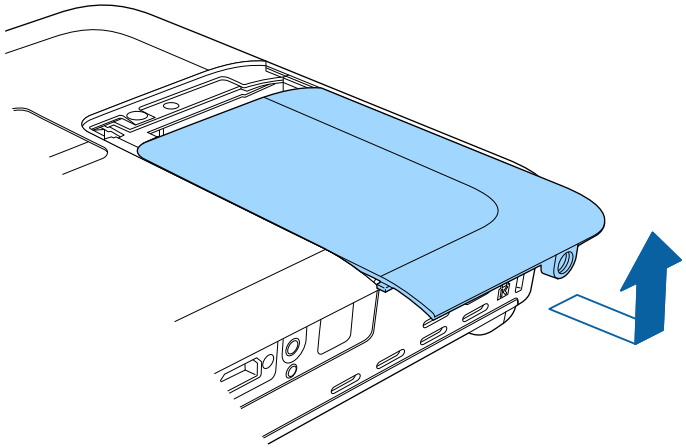

5. Lift up the metal bar securing the lamp.

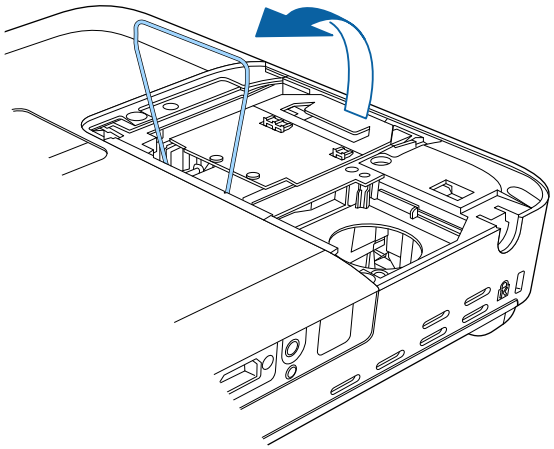

6. Lift up the lamp handle and gently pull the lamp out of the projector.

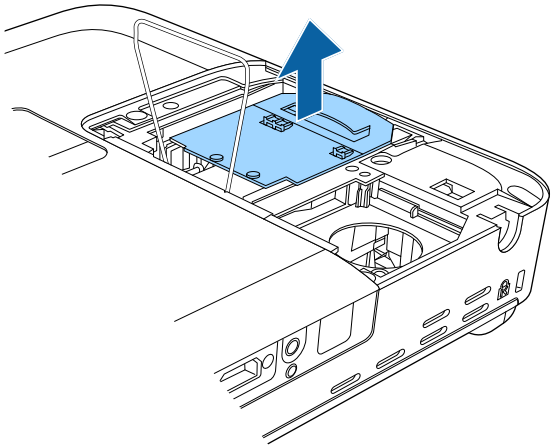

Caution: Lift the lamp handle carefully to avoid damaging the handle as you pull out the lamp.

Note: Hg The lamp(s) in this product contain mercury. Please consult your state and local regulations regarding disposal or recycling. Do not put in the trash.

7. Gently insert the new lamp into the projector. If it does not fit easily, make sure it is facing the right way. Press down on the area shown to secure the lamp in place.

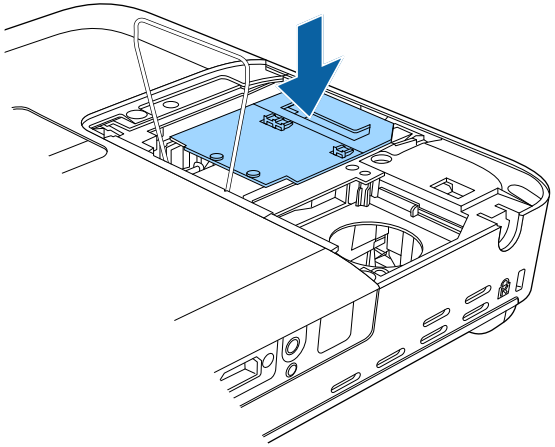

Caution: Do not touch any glass on the lamp assembly to avoid premature lamp failure.

8. Press the metal bar down over the lamp until it clicks into place on both sides.

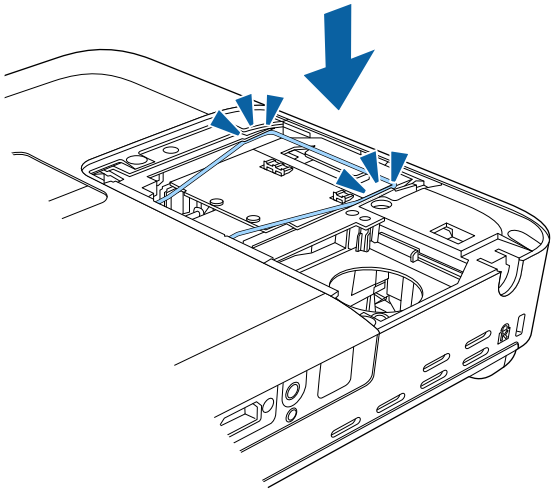

9. Replace the lamp cover and tighten the screw to secure it.

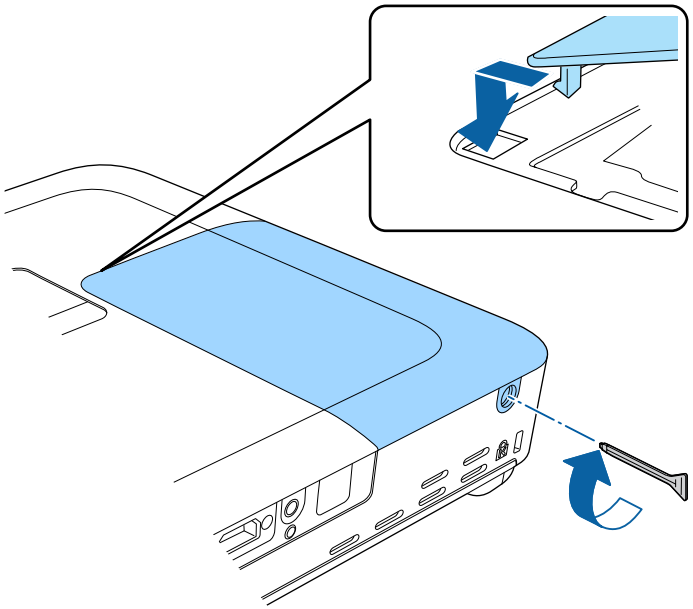

Note: Be sure the lamp cover is securely installed or the lamp will not come on.

Reset the lamp timer to zero to keep track of the new lamp's usage.

Parent topic: Projector Lamp Maintenance

Related references

Optional Equipment and Replacement Parts

Related tasks

Resetting the Lamp Timer

Resetting the Lamp Timer

You must reset the lamp timer after replacing the projector's lamp to clear the lamp replacement message and to keep track of lamp usage correctly.

Note: Do not reset the lamp timer if you have not replaced the lamp to avoid inaccurate lamp usage information.

1. Turn on the projector.
2. Press the **Menu** button.
3. Select the **Reset** menu and press **Enter**.

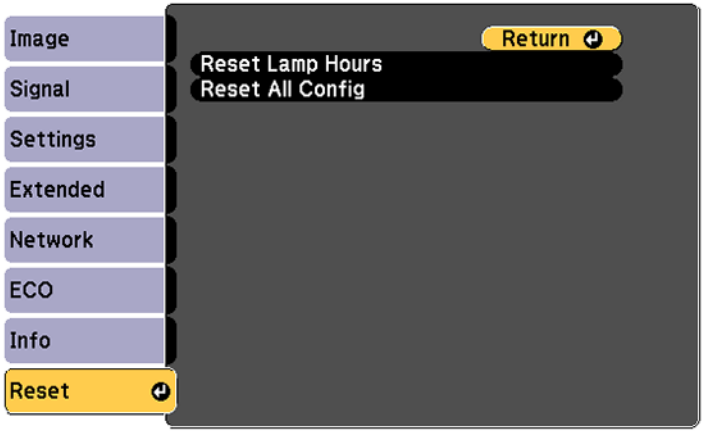

4. Select **Reset Lamp Hours** and press **Enter**.

   You see a prompt asking if you want to reset the lamp hours.
5. Select **Yes** and press **Enter**.
6. Press **Menu** or **Esc** to exit the menus.

Parent topic: Projector Lamp Maintenance

Related tasks

Replacing the Lamp

Replacing the Remote Control Batteries

The remote control uses two AA manganese or alkaline batteries. Replace the batteries as soon as they run out.

Caution: Use only the type of batteries specified in this manual. Do not install batteries of different types, or mix new and old batteries.

1. Remove the battery cover as shown.

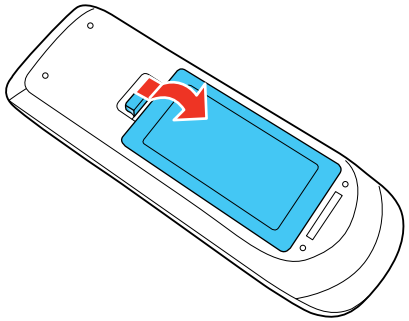

2. Remove the old batteries.

   Warning: If the battery fluid has leaked, wipe it away with a soft cloth and avoid getting the fluid on your hands. If it gets on your hands, wash them immediately to avoid injury.

3. Insert the batteries with the **+** and **–** ends facing as shown.

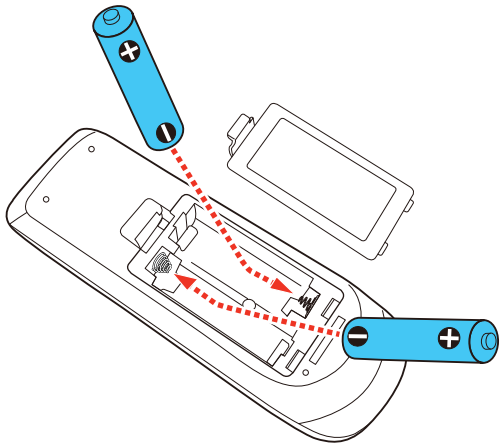

4. Replace the battery cover and press it down until it clicks into place.

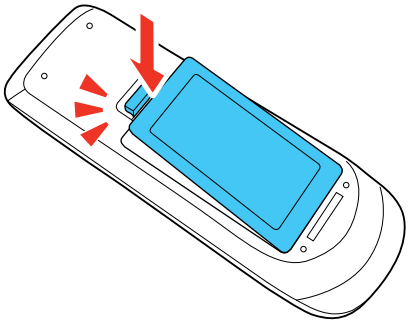

Warning: Dispose of used batteries according to local regulations. Do not expose batteries to heat or flame. Keep batteries out of the reach of children; they are choking hazards and are very dangerous if swallowed.

Parent topic: Projector Maintenance

Transporting the Projector

The projector contains precision parts, some of which are glass. Follow these guidelines to transport, ship, or store the projector safely:

- Close the lens cover to protect the lens.
- Remove any equipment connected to the projector.
- Use a carrying case to hand-carry the projector.
- When transporting the projector a long distance or as checked luggage, place it in a carrying case. Then pack the case in a firm box with cushioning around it and mark the box "Fragile."
- When shipping the projector for repairs, place it in its original packing materials, if possible, or use equivalent materials with cushioning around the projector. Mark the box "Fragile."

Note: Epson shall not be liable for any damages incurred during transportation.

Parent topic: Maintaining and Transporting the Projector

Solving Problems

Check the solutions in these sections if you have any problems using the projector.

Projection Problem Tips
Projector Light Status
Using the Projector Help Displays
Solving Image or Sound Problems
Solving Projector or Remote Control Operation Problems
Solving Network Problems
Where to Get Help

Projection Problem Tips

If the projector is not working properly, try turning it off and unplugging it. Then plug it back in and turn it on.

If this does not solve the problem, check the following:

- The lights on the projector may indicate what the problem is.
- The Help option on the Home screen can display information about common problems, if the projector is operating.
- The solutions in this manual can help you solve many problems.

If none of these solutions help, you can contact Epson for technical support.

Parent topic: Solving Problems

Related references

Projector Light Status
Where to Get Help

Related tasks

Using the Projector Help Displays

Projector Light Status

The lights on the projector indicate the projector status and let you know when a problem occurs. Check the status and color of the lights and look for a solution in the table here.

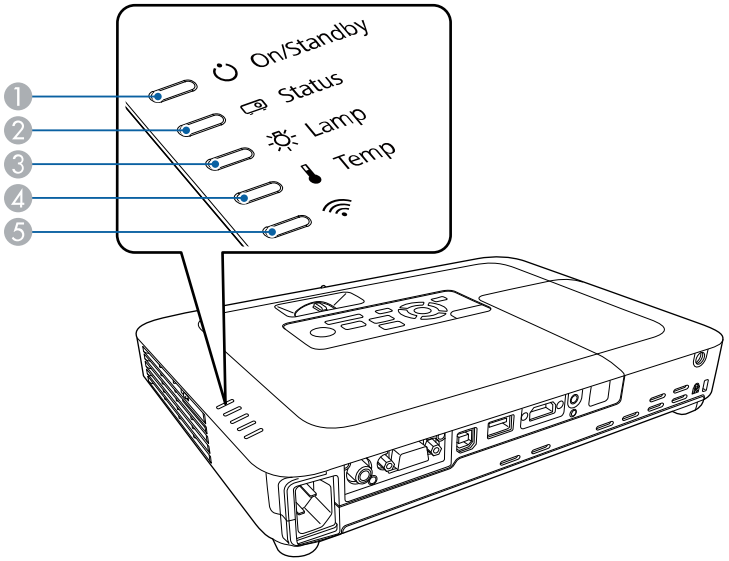

1 On/Standby light
2 Status light
3 Lamp light
4 Temp light
5 Wireless LAN light

Projector Status

On/Standby light	Status light	Lamp light	Temp light	Status and solution
Blue	Blue	Off	Off	Normal operation

On/Standby light	Status light	Lamp light	Temp light	Status and solution
Blue	Flashing blue	Off	Off	Warming up or shutting down; when warming up, wait for an image to appear
Blue	Off	Off	Off	Standby or sleep mode
Flashing blue	Varies	Varies	Flashing orange	Projector is too hot • Make sure that the vents and air filter are not clogged with dust or obstructed by nearby objects • Clean or replace the air filter • Make sure the environmental temperature is not too hot
Off	Flashing blue	Off	Orange	Projector has overheated and turned off; leave it turned off to cool down for about five minutes, then do the following: • Make sure that the vents and air filter are not clogged with dust or obstructed by nearby objects • Clean or replace the air filter • If operating the projector at high altitude, turn on **High Altitude Mode** • If the problem persists, unplug the projector and contact Epson for help

On/Standby light	Status light	Lamp light	Temp light	Status and solution
Off	Flashing blue	Orange	Off	Lamp has a problem • Check to see if the lamp is burned out, broken, or installed incorrectly; reseat or replace the lamp as necessary • Make sure the lamp cover is installed securely or the lamp will not come on • Clean or replace the air filter • If operating the projector at high altitude, turn on **High Altitude Mode** • If the problem persists, unplug the projector and contact Epson for help
Flashing blue	Varies	Flashing orange	Varies	Replace the lamp soon to avoid damage; do not continue using the projector
Off	Flashing blue	Off	Flashing orange	A fan or sensor has a problem; turn the projector off, unplug it, and contact Epson for help
Off	Flashing blue	Flashing orange	Off	Internal projector error; turn the projector off, unplug it, and contact Epson for help
Off	Flashing blue	Flashing orange	Flashing orange	Auto Iris error; turn the projector off, unplug it, and contact Epson for help
Off	Flashing blue	Orange	Orange	Power error; turn the projector off, unplug it, and contact Epson for help

Wireless LAN Status

Wireless LAN light status	Description
Blue	Wireless LAN is connected
Flashing blue rapidly	Connecting to a device
Flashing blue slowly	Wireless LAN error; turn the projector off and then on again; if the problem persists, unplug the projector and contact Epson for help
Off	Wireless LAN connection is not available; check the wireless LAN settings

Note: If the lights display a pattern not listed in the table above, turn the projector off, unplug it, and contact Epson for help.

Parent topic: Solving Problems

Related concepts

Projector Lamp Maintenance

Air Filter and Vent Maintenance

Related references

Projector Setup Settings - Extended Menu

Where to Get Help

Related tasks

Turning Off the Projector

Using the Projector Help Displays

You can display information to help you solve common problems using the projector's Help system.

1. Turn on the projector.
2. Press the **Home** button on the projector or the remote control.
3. Press the arrow buttons to select **Help**.
4. Press **Enter**.

   You see the Help menu.
5. Press the up and down arrow buttons to highlight the problem you want to solve.
6. Press **Enter** to view the solutions.

7. When you are finished, do one of the following:
   - To select another problem to solve, press **Esc**.
   - To exit the help system, press **Home**.

Parent topic: Solving Problems

Solving Image or Sound Problems

Check the solutions in these sections if you have any problems with projected images or sound.

Solutions When No Image Appears
Solutions When Image is Incorrect Using the USB Display Function
Solutions When "No Signal" Message Appears
Solutions When "Not Supported" Message Appears
Solutions When Only a Partial Image Appears
Solutions When the Image is Not Rectangular
Solutions When the Image Contains Noise or Static
Solutions When the Image is Fuzzy or Blurry
Solutions When the Image Brightness or Colors are Incorrect
Solutions to Sound Problems

Parent topic: Solving Problems

Solutions When No Image Appears

If no image appears, try the following solutions:

- Make sure the lens cover is open all the way.
- Press the **A/V Mute** button on the remote control to see if the image was temporarily turned off.
- Make sure all necessary cables are securely connected and the power is on for the projector and connected video sources.
- Press the projector's power button to wake it from standby or sleep mode. Also see if your connected computer is in sleep mode or displaying a blank screen saver.
- Press the **Menu** button. If the projector menu is able to display, there may be a problem with the connected video source, cable connection, or port.
- Check the settings on the Signal menu to make sure they are correct for the current video source.
- Adjust the **Brightness** setting or select the **Normal** Power Consumption setting.

- Check the **Display** setting to make sure **Messages** is set to **On**.
- If the projector does not respond when you press the control panel buttons, the buttons may be locked. Unlock the buttons.
- If the projector does not respond when you press buttons on the remote control, make sure the remote receivers are turned on.
- For images projected with Windows Media Center, reduce the screen size from full screen mode.
- For images projected from applications using Windows DirectX, turn off DirectX functions.
- If the other solutions do not solve the problem, reset all of the projector settings using the options on the **Reset** menu.

Parent topic: Solving Image or Sound Problems

Related references

Projector Setup Settings - Extended Menu

Input Signal Settings - Signal Menu

Image Quality Settings - Image Menu

Projector Reset Options - Reset Menu

Related tasks

Unlocking the Projector's Buttons

Solutions When Image is Incorrect Using the USB Display Function

If no image appears or if the image appears incorrectly using the USB Display function, try the following solutions:

- Press the **USB** button on the remote control.
- Make sure the USB Display software has installed correctly. Install it manually if necessary.
- Make sure the **USB Type B** setting in the Extended menu is set to **USB Display**, if available.
- On a Mac, select the **USB Display** icon in the Dock or from the **Applications** folder.
- For images projected with Windows Media Center, reduce the screen size from full screen mode.
- For images projected from applications using Windows DirectX, turn off DirectX functions.
- If the mouse cursor flickers, select **Make the movement of the mouse pointer smooth** in the Epson USB Display Settings program on your computer.
- Turn off the **Transfer layered window** setting in the Epson USB Display Settings program on your computer.

- If you are projecting using the 1080p video format and change the computer resolution during projection, the video quality and performance may decline.
- Make sure you are using the most recent version of the USB Display software. You can download the latest version from the Epson web site. Go to epson.com/support (U.S.) or epson.ca/support (Canada) and select your projector.

Parent topic: Solving Image or Sound Problems

Related tasks

Connecting to a Computer for USB Video and Audio

Solutions When "No Signal" Message Appears

If the "No Signal" message appears, try the following solutions:

- Press the **Source Search** button and wait a few seconds for an image to appear.
- Press the **Home** button on the remote control to select from a list of available sources (shown in black text).
- Turn on the connected computer or video source, and press its play button to begin your presentation, if necessary.
- Check the connection from the projector to your video sources.
- If you are projecting from a laptop computer, make sure it is set up to display on an external monitor.
- If necessary, turn the projector and the connected computer or video source off and then on again.
- If you are projecting from an HDMI source, replace the HDMI cable with a shorter one.
- If the other solutions do not solve the problem, reset all of the projector settings using the options on the **Reset** menu.

Displaying From a PC Laptop

Displaying From a Mac Laptop

Parent topic: Solving Image or Sound Problems

Related references

Projector Reset Options - Reset Menu

Related tasks

Selecting an Image Source

Displaying From a PC Laptop

If you see the "No Signal" message when you display from a PC laptop, you need to set up the laptop to display on an external monitor.

1. Hold down the laptop's **Fn** key and press the key labeled with a monitor icon or **CRT/LCD**. (See your laptop manual for details.) Wait a few seconds for an image to appear. To display on both the laptop's monitor and the projector, try pressing the same keys again.

   Note: On Windows 7 or later, hold down the Windows key and press **P** at the same time, then click **Duplicate**.

2. If the same image is not displayed by the laptop and projector, check the Windows **Display** utility to make sure the external monitor port is enabled and extended desktop mode is disabled. (See your computer or Windows manual for instructions.)
3. If necessary, check your video card settings and set the multiple display option to **Mirror** or **Duplicate**.

Parent topic: Solutions When "No Signal" Message Appears

Displaying From a Mac Laptop

If you see the "No Signal" message when you display from a Mac laptop, you need to set up the laptop for mirrored display. (See your laptop manual for details.)

1. Open the **System Preferences** utility and select **Displays**, **Display**, or **Color LCD**.
2. Click the **Arrange** or **Arrangement** tab.
3. Select the **Mirror Displays** checkbox.

Parent topic: Solutions When "No Signal" Message Appears

Solutions When "Not Supported" Message Appears

If the "Not Supported" message appears, try the following solutions:

- Make sure the correct input signal is selected on the Signal menu.
- Make sure the computer's display resolution does not exceed the projector's resolution and frequency limit. If necessary, select a different display resolution for your computer. (See your computer manual for details.)
- As a test, try setting the computer's display resolution to the lowest possible setting, and then gradually increase it as necessary.

Parent topic: Solving Image or Sound Problems

Related references

Input Signal Settings - Signal Menu

Supported Video Display Formats

Solutions When Only a Partial Image Appears

If only a partial computer image appears, try the following solutions:

- Press the **Auto** button on the remote control to optimize the image signal.
- For VGA connections, press the **Auto** button on the remote control to optimize the image signal.
- Make sure the **Resolution** setting in the Signal menu is set correctly to for the input signal.
- Try adjusting the image position using the **Position** menu setting.
- Press the **Aspect** button on the remote control to select a different image aspect ratio.
- If you zoomed into or out of the image using the **E-Zoom** buttons, press the **Esc** button until the projector returns to a full display.
- Check the cables connecting the computer or video source to the projector. Try connecting different cables.
- Check your computer display settings to disable dual display and set the resolution within the projector's limits. (See your computer manual for details.)
- Check the resolution assigned to your presentation files to see if they are created for a different resolution than you are projecting in. (See your software help for details.)
- Make sure you selected the correct **Projection** setting.

Parent topic: Solving Image or Sound Problems

Related references

Input Signal Settings - Signal Menu

Supported Video Display Formats

Solutions When the Image is Not Rectangular

If the projected image is not evenly rectangular, try the following solutions:

- Turn on automatic keystone adjustments using the projector's menus.
- Place the projector directly in front of the center of the screen, facing it squarely, if possible.
- If you adjusted the projector height using the projector feet, press the keystone buttons on the projector to adjust the image shape.

- Press the **Screen Fit** button and adjust the image shape using the on-screen display (PowerLite 1781W/1785W/1795F).
- Adjust the **Quick Corner** setting to correct the image shape.

Parent topic: Solving Image or Sound Problems

Related concepts

Image Shape

Related references

Projector Feature Settings - Settings Menu

Solutions When the Image Contains Noise or Static

If the projected image seems to contain electronic interference (noise) or static, try the following solutions:

- Check the cables connecting your computer or video source to the projector. They should be:
  - Separated from the power cord to prevent interference
  - Securely connected at both ends
  - Not connected to an extension cable
  - No longer than 10 feet (3 m) for VGA/computer cables or 24 feet (7.3 m) for HDMI cables
- Check the settings on the projector's Signal menu to make sure they match the video source. If available for your video source, adjust the **Deinterlacing** and **Noise Reduction** settings.
- Select **Auto** as the Resolution setting in the Signal menu.
- Select a computer video resolution and refresh rate that are compatible with the projector.
- If you are projecting from a computer, press the **Auto** button on the remote control to automatically adjust the tracking and sync. If the problem remains, display a uniformly patterned image on the screen and manually adjust the **Tracking** and **Sync** settings.
- If you adjusted the image shape using the projector controls, try decreasing the **Sharpness** setting to improve image quality.
- If you connected an extension power cable, try projecting without it to see if it caused interference in the signal.
- If you are using the USB Display function, turn off the **Transfer layered window** setting in the Epson USB Display Settings program on your computer.
- Try a different cable.

Parent topic: Solving Image or Sound Problems

Related references

Image Quality Settings - Image Menu

Input Signal Settings - Signal Menu

Supported Video Display Formats

Solutions When the Image is Fuzzy or Blurry

If the projected image is fuzzy or blurry, try the following solutions:

- Adjust the image focus.
- Clean the projector lens.

  Note: To avoid condensation on the lens after bringing the projector in from a cold environment, let the projector warm up to room temperature before using it.

- Position the projector close enough to the screen.
- Position the projector so the keystone adjustment angle is not so wide that it distorts the image.
- When using the **Screen Fit** feature (PowerLite 1781W/1785W/1795F), position the projector at a compatible distance from the screen or adjust the image shape manually.
- Turn on automatic keystone adjustment in the projector's menus.
- Adjust the **Sharpness** setting to improve image quality.
- If you are projecting from a computer, press the **Auto** button on the remote control to automatically adjust the tracking and sync. If any bands or overall blurriness remain, display a uniformly patterned image on the screen and manually adjust the **Tracking** and **Sync** settings.
- If you are projecting from a computer, try using a lower resolution or try to match the projector's native resolution.

Parent topic: Solving Image or Sound Problems

Related concepts

Projector Placement

Related references

Image Quality Settings - Image Menu

Related tasks

Focusing the Image Using the Focus Ring

Focusing the Image Using the Focus Button
Automatically Correcting Image Shape with Screen Fit
Cleaning the Lens

Solutions When the Image Brightness or Colors are Incorrect

If the projected image is too dark or light, or the colors are incorrect, try the following solutions:

- Press the **Color Mode** button on the remote control to try different color modes for the image and environment.
- Check your video source settings.
- Adjust the available settings on the Image menu for the current input source, such as **Brightness**, **Contrast**, **Tint**, **Color Temp.**, and/or **Color Saturation**.
- Make sure you selected the correct **Input Signal** or **Video Signal** setting on the Signal menu, if available for your image source.
- Make sure you selected the correct **Gamma** or **RGBCMY** setting in the Image menu.
- Make sure all the cables are securely connected to the projector and your video device. If you connected long cables, try connecting shorter cables.
- If you are using the **ECO** Power Consumption setting, try selecting **Normal** in the projector's menus.
- Position the projector close enough to the screen.
- If the image has been progressively darkening, you may need to replace the projector lamp soon.

Parent topic: Solving Image or Sound Problems

Related concepts

Color Mode
Projector Placement

Related references

Image Quality Settings - Image Menu
Input Signal Settings - Signal Menu
Projector Setup Settings - ECO Menu

Solutions to Sound Problems

If there is no sound when you expect it or the volume is too low or high, try the following solutions:

- Adjust the projector's volume settings.

- Press the **A/V Mute** button on the remote control to resume video and audio if they were temporarily stopped.
- Press the **Source Search** button to switch to the correct input source, if necessary.
- Check your computer or video source to make sure the volume is turned up and the audio output is set for the correct source.
- Check the audio cable connections between the projector and your video source.
- If you do not hear sound from an HDMI source, set the connected device to PCM output.
- Make sure any connected audio cables are labeled "No Resistance".
- If you are using the USB Display function, turn on the **Output audio from the projector** setting in the Epson USB Display Settings program on your computer.
- If you are using a Mac and you do not hear sound from an HDMI source, make sure your Mac supports audio through the HDMI port. If not, you need to connect an audio cable.
- If you want to use a connected audio source when the projector is off, set the **Standby Mode** option to **Communication On** and make sure the **A/V Settings** options are set correctly.
- If the volume for the computer is set to the minimum while the projector's volume is set to maximum, the noise may be mixed. Turn up the computer's volume and decrease the projector's volume.
- If you turn the projector on immediately after turning it off, the cooling fans may run at high speed momentarily and cause an unexpected noise. This is normal.

Parent topic: Solving Image or Sound Problems

Related references

Projector Setup Settings - ECO Menu
Projector Setup Settings - Extended Menu

Related tasks

Controlling the Volume with the Volume Buttons

Solving Projector or Remote Control Operation Problems

Check the solutions in these sections if you have problems operating the projector or remote control.

Solutions to Projector Power or Shut-Off Problems
Solutions to Problems with the Remote Control
Solutions to Password Problems
Solutions When a Battery Message Appears
Solutions to Gesture Presenter Problems

Parent topic: Solving Problems

Solutions to Projector Power or Shut-Off Problems

If the projector does not come on when you press the power button or it shuts off unexpectedly, try the following solutions:

- Make sure the power cord is securely connected to the projector and to a working electrical outlet.
- The projector's buttons may be locked for security. Unlock the buttons or use the remote control to turn on the projector.
- If the projector's lamp shuts off unexpectedly, it may have entered standby mode after a period of inactivity. Press the power button to wake the projector and adjust the **Sleep Mode Timer** setting to change the sleep interval.
- If the power button on the remote control does not turn on the projector, check its batteries and make sure the **Remote Receiver** setting is turned on in the projector's menu, if available.
- The power cord may be defective. Try another power cord. If that doesn't work, disconnect the cord and contact Epson.
- Make sure the lamp and lamp cover are installed correctly.

Parent topic: Solving Projector or Remote Control Operation Problems

Related references

Projector Light Status

Projector Feature Settings - Settings Menu

Projector Setup Settings - ECO Menu

Related tasks

Unlocking the Projector's Buttons

Solutions to Problems with the Remote Control

If the projector does not respond to remote control commands, try the following solutions:

- Check that the remote control batteries are installed correctly and have power. If necessary, replace the batteries.
- Make sure you are operating the remote control within the reception angle and range of the projector.
- Make sure the projector is not warming up or shutting down.
- Check to see if a button on the remote control is stuck down, causing it to enter sleep mode. Release the button to wake the remote control up.

- Strong fluorescent lighting, direct sunlight, or infrared device signals may be interfering with the projector's remote receivers. Dim the lights or move the projector away from the sun or interfering equipment.
- If available, turn off one of the remote receivers in the projector's menu system, or check if all the remote receivers were turned off.
- If you assigned an ID number to the remote control to operate multiple projectors, you may need to check or change the ID setting (feature not available with all projectors).
- If you lose the remote control, you can purchase another from an authorized Epson reseller.

Parent topic: Solving Projector or Remote Control Operation Problems

Related concepts

Projector Identification System for Multiple Projector Control

Related references

Remote Control Operation
Projector Feature Settings - Settings Menu

Related tasks

Replacing the Remote Control Batteries

Solutions to Password Problems

If you cannot enter or remember a password, try the following solutions:

- You may have turned on password protection without first setting a password. Try entering **0000** using the remote control.
- If you have entered an incorrect password too many times and see a message displaying a request code, write down the code and contact Epson. Do not attempt to enter the password again. Provide the request code and proof of ownership for assistance in unlocking the projector.
- If you set a Web Control password and forgot the user ID or password, try entering the following:
  - User ID: **EPSONWEB**
  - Default password: **admin**
- If you set a Remote password (in Epson Web Control) and forgot the user ID or password, try entering the following:
  - User ID: **EPSONREMOTE**
  - Default password: **guest**
- If you lose the remote control, you cannot enter a password. Order a new one from Epson.

Parent topic: Solving Projector or Remote Control Operation Problems

Related concepts

Password Security Types

Solutions When a Battery Message Appears

If you see a "The battery that saves your clock settings is running low" message, contact Epson for help.

Parent topic: Solving Projector or Remote Control Operation Problems

Solutions to Gesture Presenter Problems

If the Gesture Presenter feature is not working properly (PowerLite 1785W/1795F), try the following solutions:

- Make sure the USB cable is securely connected to the computer and the projector.
- Select **Normal** as the **Power Consumption** setting.
- Make sure the projection surface is white (or light-colored), clean, and out of direct sunlight or other sources of bright lighting.
- Dim the lights or move the projector away from the sun or interfering sources of light.

Parent topic: Solving Projector or Remote Control Operation Problems

Solving Network Problems

Check the solutions in these sections if you have problems using the projector on a network.

Solutions When Wireless Authentication Fails

Solutions When You Cannot Access the Projector Through the Web

Solutions When You Cannot Connect Using Screen Mirroring

Solutions When the Image or Sound Contains Static When Using Screen Mirroring

Solutions When You Cannot Read the NFC Tag

Parent topic: Solving Problems

Solutions When Wireless Authentication Fails

If you cannot authenticate a wireless connection, try the following solutions (PowerLite 1781W/1785W/1795F):

- If the wireless settings are correct, but authentication fails, you may need to update the **Date & Time** settings on the Extended menu, if available.

- Make sure the **Wireless LAN Power** setting is set to **On**.
- Check the Security settings and passphrase in the Network Configuration menu.

Parent topic: Solving Network Problems

Related references

Projector Network Settings - Network Menu

Related tasks

Selecting Wireless Network Settings Manually

Solutions When You Cannot Access the Projector Through the Web

If you are unable to access the projector through a web browser, make sure you are using the correct ID and password, which are case sensitive.

Note: You cannot change the user ID.

- To display the Web Control screen, enter **EPSONWEB** as the user ID, and enter the password set in the projector's Network menu as the password. The default password is **admin**.
- To display the Web Remote screen, enter **EPSONREMOTE** as the user ID and enter the password set in the projector's Network menu as the password. The default password is **guest**.
- Make sure you have access to the network the projector is on.

Note: The user ID and password are case sensitive.

Parent topic: Solving Network Problems

Related tasks

Controlling a Networked Projector Using a Web Browser

Solutions When You Cannot Connect Using Screen Mirroring

If you are unable to connect to the projector using Screen Mirroring (PowerLite 1785W/1795F), try the following solutions:

- Select **On** as the **Screen Mirroring** setting in the projector's Network menu.
- Make sure the **Operation Mode** and **Channel** settings are correct for your mobile environment and try connecting again.
- Make sure no other mobile device is connected to the projector using **No Interruptions** settings in the **Extended** menu **Meeting Mode** settings.

- Make sure the mobile device settings are correct.
- You may not be able to connect immediately after disconnecting from the projector. Wait a while and try connecting again.
- Restart the mobile device.
- If you have previously connected to the projector using Screen Mirroring, the device may have saved the previous connection information. Delete the saved information and connect to the projector from the list of available devices.

Parent topic: Solving Network Problems

Solutions When the Image or Sound Contains Static When Using Screen Mirroring

If the projected image or sound contains static when connecting using Screen Mirroring, try the following solutions:

- Avoid covering the Wi-Fi antenna of the mobile device.
- If you use a Screen Mirroring connection and an internet connection at the same time, the image may freeze or contain noise. Disconnect from the internet to improve the connection speed of the mobile device.
- Make sure the projection contents meet the Screen Mirroring requirements.
- Depending on the settings of the mobile device, the connection may be lost when the device enters power saving mode. Check the power saving settings on the mobile device.
- Make sure your mobile device has the latest version of its wireless driver and firmware installed.

Parent topic: Solving Network Problems

Solutions When You Cannot Read the NFC Tag

If you are unable to read the NFC tag on your mobile device, try the following solutions (PowerLite 1781W/1785W/1795F):

- Make sure the mobile device is unlocked and not in standby or sleep mode.
- Make sure the mobile device settings are correct.
- Make sure the NFC reader is activated on your mobile device.
- Adjust the position of the mobile device so that the NFC reader on the device is positioned over the center of the NFC tag on the projector.
- Restart the mobile device.

Parent topic: Solving Network Problems

Where to Get Help

If you need to contact Epson for technical support services, use the following support options.

Internet Support

Visit Epson's support website at epson.com/support (U.S.), epson.ca/support (Canada), or epson.com.jm/support (Caribbean) and select your product for solutions to common problems with your projector. You can download utilities and documentation, get FAQs and troubleshooting advice, or e-mail Epson with your questions.

Speak to a Support Representative

To use the Epson PrivateLine Support service, call (800) 637-7661. This service is available for the duration of your warranty period. You may also speak with a projector support specialist by dialing (562) 276-4394 (U.S.) or (905) 709-3839 (Canada).

Support hours are 6 AM to 8 PM, Pacific Time, Monday through Friday and 7 AM to 4 PM, Pacific Time, Saturday.

Days and hours of support are subject to change without notice. Toll or long distance charges may apply.

Before you call, have the following information ready:

- Product name
- Product serial number (located on the bottom or rear of the projector, or in the menu system)
- Proof of purchase (such as a store receipt) and date of purchase
- Computer or video configuration
- Description of the problem

Purchase Supplies and Accessories

You can purchase screens, other optional accessories, and replacement parts from an Epson authorized reseller. To find the nearest reseller, call 800-GO-EPSON (800-463-7766) in the U.S. or 800-807-7766 in Canada. Or you can purchase online at epsonstore.com (U.S. sales) or epsonstore.ca (Canadian sales).

To purchase a replacement remote control, call (562) 276-4394 (U.S.) or (905) 709-3839 (for dealer referral in Canada).

Parent topic: Solving Problems

Technical Specifications

These sections list the technical specifications of your projector.

General Projector Specifications
Projector Lamp Specifications
Remote Control Specifications
Projector Dimension Specifications
Projector Electrical Specifications
Projector Environmental Specifications
Projector Safety and Approvals Specifications
Supported Video Display Formats
USB Display System Requirements

General Projector Specifications

Type of display	Poly-silicon TFT active matrix
Resolution	**PowerLite 1780W/1781W/1785W**:
	1280 × 800 pixels (WXGA)
	PowerLite 1795F:
	1920 × 1080 pixels (1080P)
Lens	F=1.58 to 1.7
	PowerLite 1780W/1781W/1785W:
	Focal length: 13.52 to 16.22 mm
	PowerLite 1795F:
	Focal length: 14.06 to 16.82 mm
Color reproduction	Full color, up to 1 billion colors

Brightness	**PowerLite 1780W**: Normal Power Consumption mode: White light output 3000 lumens (ISO 21118 standard) Color light output 3000 lumens ECO Power Consumption mode: White light output 1900 lumens (ISO 21118 standard) **PowerLite 1781W/1785W/1795F**: Normal Power Consumption mode: White light output 3200 lumens (ISO 21118 standard) Color light output 3200 lumens ECO Power Consumption mode: White light output 1900 lumens (ISO 21118 standard) **Note:** Color brightness (color light output) and white brightness (white light output) will vary depending on usage conditions. Color light output measured in accordance with IDMS 15.4; white light output measured in accordance with ISO 21118.
Contrast ratio	10000:1 with Dynamic Color Mode, Normal Power Consumption mode, Wide Zoom, and Auto Iris on
Image size (in native aspect ratio)	30 inches (0.76 m) to 300 inches (7.62 m)
Projection distance (in native aspect ratio)	**PowerLite 1780W/1781W/1785W**: 26.4 inches (0.67 m) to 322.0 inches (8.18 m) **PowerLite 1795F**: 26.4 inches (0.67 m) to 326.0 inches (8.28 m)
Projection methods	Front, rear, ceiling-mounted

Optical aspect ratio (width-to-height)	**PowerLite 1780W/1781W/1785W**: 16:10 **PowerLite 1795F**: 16:9
Focus adjustment	**PowerLite 1780W**: Manual **PowerLite 1781W/1785W/1795F**: Powered
Zoom adjustment	Manual
Zoom ratio (Tele-to-Wide)	1:1.2
Internal sound system	1 W monaural
Noise level	39 dB (Normal Power Consumption mode) 30 dB (ECO Power Consumption mode)
Keystone correction angle	Vertical: ± 45° Horizontal: ± 30°
USB Type B port compatibility	USB 1.1 and 2.0 compliant for USB display, external mouse or keyboard, or firmware update
USB Type A port compatibility	One USB 1.1 and 2.0 compliant port for USB device input, Epson document camera display, wireless LAN module, or firmware update

Parent topic: Technical Specifications

Projector Lamp Specifications

Type	UHE (Ultra High Efficiency)
Power consumption	**PowerLite 1780W**: 206 W **PowerLite 1781W/1785W/1795F**: 214 W

Lamp life	Normal Power Consumption mode: Up to about 4000 hours ECO Power Consumption mode: Up to about 7000 hours

Note: Turn off this product when not in use to prolong the life of the projector. Lamp life will vary depending upon mode selected, environmental conditions, and usage. Brightness decreases over time.

Parent topic: Technical Specifications

Remote Control Specifications

Reception range	19.7 feet (6 m)
Batteries	Two alkaline or manganese AA

Parent topic: Technical Specifications

Projector Dimension Specifications

Height (excluding feet)	1.7 inches (44 mm)
Width	11.5 inches (292 mm)
Depth	8.4 inches (213 mm)
Weight	**PowerLite 1780W**: 3.89 lb (1.77 kg) **PowerLite 1781W/1785W**: 3.98 lb (1.81 kg) **PowerLite 1795F**: 4.04 lb (1.83 kg)

Parent topic: Technical Specifications

Projector Electrical Specifications

Rated frequency	50/60 Hz
Power supply	100 to 240 VAC ±10% **PowerLite 1780W**: 3.0 to 1.3 A **PowerLite 1781W/1785W/1795F**: 3.2 to 1.4 A
Power consumption (100 to 120 V)	Operating: **PowerLite 1780W**: Normal Power Consumption mode: 290 W ECO Power Consumption mode: 208 W **PowerLite 1781W/1785W/1795F**: Normal Power Consumption mode: 309 W ECO Power Consumption mode: 217 W Standby: 0.18 W
Power consumption (220 to 240 V)	Operating: **PowerLite 1780W**: Normal Power Consumption mode: 277 W ECO Power Consumption mode: 200 W **PowerLite 1781W/1785W/1795F**: Normal Power Consumption mode: 295 W ECO Power Consumption mode: 208 W Standby: 0.34 W

Parent topic: Technical Specifications

Projector Environmental Specifications

Temperature	Operating: Up to 7500 feet (2286 m): 41 to 104 °F (5 to 40 °C) 7500 feet (2286 m) to 9843 feet (3000 m): 41 to 95 °F (5 to 35 °C) Storage: 14 to 140 °F (–10 to 60 °C)
Humidity (relative, non-condensing)	Operating: 20 to 80% Storage: 10 to 90%
Operating altitude	Up to 4921 feet (1500 m) Up to 9843 feet (3000 m) with High Altitude Mode enabled

Parent topic: Technical Specifications

Projector Safety and Approvals Specifications

United States	FCC Part 15 Class B (DoC) UL60950-1 2nd edition (cTUVus Mark)
Canada	ICES-003 Class B CSA C22.2 No. 60950-1-07 (cTUVus Mark)

Parent topic: Technical Specifications

Supported Video Display Formats

For best results, your computer's monitor port or video card resolution should be set to display in the projector's native resolution. However, your projector includes Epson's SizeWise chip that supports other computer display resolutions, so your image will be resized to fit automatically.

Your computer's monitor port or video card refresh rate (vertical frequency) must be compatible with the projector. (See your computer or video card manual for details.)

The table here lists the compatible refresh rate and resolution for each compatible video display format.

Display format	Refresh rate (in Hz)	Resolution (in pixels)
Computer signals (analog RGB)		

Display format	Refresh rate (in Hz)	Resolution (in pixels)
VGA	60/72/75/85	640 × 480
SVGA	60/72/75/85	800 × 600
XGA	60/72/75/85	1024 × 768
WXGA	60	1280 × 768
	60	1366 × 768
	60/75/85	1280 × 800
WXGA+	60/75/85	1440 × 900
WXGA++	60	1600 × 900
SXGA	70/75/85	1152 × 864
	60/75/85	1280 × 960
	60/75/85	1280 × 1024
SXGA+	60/75	1400 × 1050
WSXGA+*	60	1680 × 1050
UXGA	60	1600 × 1200
Composite video		
TV (NTSC)	60	720 × 480
TV (SECAM)	50	720 × 576
TV (PAL)	50/60	720 × 576
Component video		
SDTV (480i/480p)	60	720 × 480
SDTV (576i/576p)	50	720 × 576
HDTV (720p)	50/60	1280 × 720
HDTV (1080i/1080p**)	50/60	1920 × 1080
HDMI		
VGA	60	640 × 480
SVGA	60	800 × 600

Display format	Refresh rate (in Hz)	Resolution (in pixels)
XGA	60	1024 × 768
WXGA	60	1280 × 800
	60	1366 × 768
WXGA+	60	1440 × 900
WXGA++	60	1600 × 900
UXGA	60	1600 × 1200
WSXGA+	60	1680 × 1050
SXGA	60	1280 × 960
	60	1280 × 1024
SXGA+	60	1400 × 1050
WUXGA***	60	1920 × 1200
SDTV (480i/480p)	60	720 × 480
SDTV (576i/576p)	50	720 × 576
HDTV (720p)	50/60	1280 × 720
HDTV (1080i)	50/60	1920 × 1080
HDTV (1080p)	24/30/50/60	1920 × 1080
MHL input signals		
VGA	60	640 × 480
SDTV (480i/480p)	60	720 × 480
SDTV (576i/576p)	50	720 × 576
HDTV (720p)	50/60	1280 × 720
HDTV (1080i)	50/60	1920 × 1080
HDTV (1080p)	24/30	1920 × 1080

* **Wide** resolution only

** **Computer** port only

*** PowerLite 1795F only

Parent topic: Technical Specifications

USB Display System Requirements

Your computer system must meet the system requirements here to use the projector's USB Display software.

Requirement	Windows	Mac
Operating system	Windows Vista Ultimate, Enterprise, Business, Home Premium, and Home Basic (32-bit)	OS X 10.5.x (32-bit), and 10.6.x, 10.7.x , 10.8.x, 10.9.x, 10.10.x, and 10.11.x (32- and 64-bit), and macOS 10.12.x.
	Windows 7 Ultimate, Enterprise, Professional, and Home Premium (32- and 64-bit); Home Basic and Starter (32-bit)	
	Windows 8.x, Pro, and Enterprise (32- and 64-bit)	
	Windows 10 Home, Pro, and Enterprise (32- and 64-bit)	
USB version	USB 2.0	
CPU	Intel Core2 Duo or faster (Intel Core i3 or faster recommended)	Intel Core2 Duo or faster (Intel Core i5 or faster recommended)
Memory	2GB or more (4GB or more recommended)	
Hard disk space	20MB or more	
Display	Resolution between 640 × 480 and 1920 × 1200, 16-bit color or greater	

Parent topic: Technical Specifications

Notices

Check these sections for important notices about your projector.

Recycling
Important Safety Information
Important Safety Instructions
List of Safety Symbols (corresponding to IEC60950-1 A2)
FCC Compliance Statement
Open Source Software License
Binding Arbitration and Class Waiver
Trademarks
Copyright Notice

Recycling

Epson offers a recycling program for end of life products. Please go to this site for information on how to return your products for proper disposal.

Parent topic: Notices

Important Safety Information

Caution: Never look into the projector lens when the lamp is turned on; the bright light can damage your eyes. Never let children look into the lens when it is on. Never open any cover on the projector, except the lamp and filter covers. Dangerous electrical voltages inside the projector can severely injure you. Except as specifically explained in this *User's Guide*, do not attempt to service this product yourself. Refer all servicing to qualified service personnel.

Warning: The projector and its accessories come packaged in plastic bags. Keep plastic bags away from small children to avoid any risk of suffocation.

Caution: When you replace the lamp, never touch the new lamp with your bare hands; the invisible residue left by the oil on your hands may shorten the lamp life. Use a cloth or glove to handle the new lamp.

Parent topic: Notices

Important Safety Instructions

Follow these safety instructions when setting up and using the projector:

- Do not look into the lens when the projector is on. The bright light can damage your eyes. Avoid standing in front of the projector so the bright light does not shine into your eyes.
- Do not place the projector on an unstable cart, stand, or table.
- Do not operate the projector on its side, or while tilted to one side. Do not tilt the projector more than 30° forward or back.
- If the projector is mounted on a ceiling or wall, it should be installed by qualified technicians using mounting hardware designed for use with this projector.
- When installing or adjusting a ceiling or wall mount, do not use adhesives to prevent the screws from loosening and do not use oils or lubricants. This may cause the projector case to crack and the projector to fall from its ceiling mount. This could cause serious injury to anyone under the mount and could damage the projector.
- Do not use the projector near water, sources of heat, high-voltage electrical wires, or sources of magnetic fields.
- Use the type of power source indicated on the projector. Use of a different power source may result in fire or electric shock. If you are not sure of the power available, consult your dealer or power company.
- Place the projector near a wall outlet where the plug can be easily unplugged.
- Take the following precautions when handling the plug: Do not hold the plug with wet hands. Do not insert the plug into a dusty outlet. Insert the plug firmly into the outlet. Do not pull the power cord when disconnecting the plug; always be sure to hold the plug when disconnecting it. Do not overload wall outlets, extension cords, or power strips. Failure to comply with these precautions could result in fire or electric shock.
- Do not place the projector where the cord can be walked on. This may result in fraying or damage to the plug.
- Unplug the projector from the wall outlet and allow to cool before cleaning. Use a dry cloth (or, for stubborn dirt or stains, a moist cloth that has been wrung dry) for cleaning. Do not use liquid or aerosol cleaners, any sprays containing flammable gas, or solvents such as alcohol, paint thinner, or benzine.
- Do not block the slots and openings in the projector case. They provide ventilation and prevent the projector from overheating. Do not operate the projector on a sofa, rug, or other soft surface, or set it on top of loose papers. Do not cover the projector with a blanket, curtain, or tablecloth. If you are setting up the projector near a wall, leave at least 7.9 inches (20 cm) of space between the wall and the projector.
- Do not operate the projector in a closed-in cabinet unless proper ventilation is provided.

- Never allow objects of any kind to enter any openings in the projector. Do not leave objects, especially flammable objects, near the projector. Never spill liquid of any kind into the projector.
- If you are using two or more projectors side-by-side, leave at least 2 feet (60 cm) of space between the projectors to allow for proper ventilation.
- You may need to clean the air filter and vent. A clogged air filter or vent can block ventilation needed to cool the projector. Do not use canned air, or the gases may leave a residue.
- Do not store the projector outdoors for an extended length of time.
- Except as specifically explained in this manual, do not attempt to service this product yourself. Refer all servicing to qualified personnel. Opening or removing covers may expose you to dangerous voltages and other hazards.
- Never open any covers on the projector except as specifically explained in this manual. Never attempt to disassemble or modify the projector. Refer all repairs to qualified service personnel.
- Unplug the projector from the wall outlet and refer servicing to qualified service personnel under the following conditions: if it does not operate normally when you follow the operating instructions, or exhibits a distinct change in performance; if smoke, strange odors, or strange noises come from the projector; if the power cord or plug is damaged or frayed; if liquid or foreign objects get inside the projector, or if it has been exposed to rain or water; if it has been dropped or the housing has been damaged.
- Do not touch the plug during an electrical storm. Otherwise, you may receive an electric shock.
- Unplug the projector when it will not be used for extended periods.
- Do not use the projector where it may be exposed to rain, water, or excessive humidity.
- Do not use or store the projector where it may be exposed to smoke, steam, corrosive gases, excessive dust, vibration, or shock.
- Do not use the projector where flammable or explosive gases may be present.
- Do not use or store the projector or remote control in a hot location, such as near a heater, in direct sunlight, or in a closed vehicle.
- If you use the projector in a country other than where you purchased it, use the correct power cord for that country.
- Do not stand on the projector or place heavy objects on it.
- Do not use the projector outside of the required temperature range below:

  41 to 104 °F (5 to 40 °C) at an altitude of 7500 feet (2286 m) or less, or 41 to 95 °F (5 to 35 °C) at a higher altitude

Doing so may cause an unstable display and could lead to projector damage. Do not use or store the projector where it may be exposed to sudden changes in temperature.

- Do not store the projector outside of the required temperature range of 14 to 140 °F (–10 to 60 °C) or in direct sunlight for long periods of time. Doing so may cause damage to the case.
- Do not place anything that can become warped or damaged by heat near the exhaust vents. Do not bring your hands or face close to the vents while projection is in progress. Do not bring your face close to the projector while it is in use.
- Before you move the projector, make sure its power is turned off, the plug is disconnected from the outlet, and all cables are disconnected.
- Never try to remove the lamp immediately after use because it will be extremely hot. Before removing the lamp, turn off the power and wait at least an hour to allow the lamp to cool completely.
- Do not disassemble the lamp or subject it to impacts.
- Do not place the source of an open flame, such as a lit candle, on or near the projector.
- Do not block the lens during projection using a book or any object other than the lens cover. Use the lens cover to temporarily stop projection, but avoid projecting with the lens cover closed for a long period. This could damage the projector or cause a fire.
- Do not modify the power cord. Do not place heavy objects on top of the power cord or bend, twist, or pull it excessively. Keep the power cord away from hot electrical appliances.
- If the lamp breaks, ventilate the room to prevent gases contained in the lamp from being inhaled or coming in contact with your eyes or mouth. If you do inhale gases or gases come in contact with your eyes or mouth, seek medical advice immediately.
- If the projector is mounted overhead and the lamp breaks, be careful to prevent pieces of glass from falling into your eyes or mouth when you open the lamp cover. If pieces of glass do get into your eyes or mouth, seek medical advice immediately.
- Always lower the volume before turning off the projector. Turning on the projector with the volume too high can damage your ears.

Note: Hg The lamp(s) in this product contain mercury. Please consult your state and local regulations regarding disposal or recycling. Do not put in the trash.

WARNING: The cords included with this product contain chemicals, including lead, known to the State of California to cause birth defects or other reproductive harm. ***Wash hands after handling.*** (This notice is provided in accordance with Proposition 65 in Cal. Health & Safety Code § 25249.5 and following.)

Restriction of Use

Parent topic: Notices

Restriction of Use

When this product is used for applications requiring high reliability/safety such as transportation devices related to aviation, rail, marine, automotive; disaster prevention devices; various safety devices; or functional/precision devices, you should use this product only after giving consideration to including fail-safes and redundancies into your design to maintain safety and total system reliability.

Because this product was not intended for use in applications requiring extremely high reliability/safety such as aerospace equipment, main communication equipment, nuclear power control equipment, or medical equipment related to direct medical care, please make your own judgment on this product's suitability after a full evaluation.

Parent topic: Important Safety Instructions

List of Safety Symbols (corresponding to IEC60950-1 A2)

The following table lists the meaning of the safety symbols labeled on the equipment.

No.	Symbol	Approved Standards	Description
1	I	IEC60417 No.5007	"ON" (power) To indicate connection to the mains.
2	O	IEC60417 No.5008	"OFF" (power) To indicate disconnection from the mains.
3	⏻	IEC60417 No.5009	Stand-by To identify the switch or switch position by means of which part of the equipment is switched on in order to bring it into the stand-by condition.
4	⚠	ISO7000 No.0434B, IEC3864-B3.1	Caution To identify general caution when using the product.

No.	Symbol	Approved Standards	Description
5		IEC60417 No.5041	Caution, hot surface To indicate that the marked item can be hot and should not be touched without taking care.
6		IEC60417 No.6042 ISO3864-B3.6	Caution, risk of electric shock To identify equipment that has risk of electric shock.
7		IEC60417 No.5957	For indoor use only To identify electrical equipment designed primarily for indoor use.
8		IEC60417 No.5926	Polarity of DC power connector To identify the positive and negative connections (the polarity) on a piece of equipment to which a DC power supply may be connected.
9		—	Polarity of DC power connector To identify the positive and negative connections (the polarity) on a piece of equipment to which a DC. power supply may be connected.
10		IEC60417 No.5001B	Battery, general On battery powered equipment. To identify a device for instance a cover for the battery compartment, or the connector terminals.
11		IEC60417 No.5002	Positioning of cell To identify the battery holder itself and to identify the positioning of the cell(s) inside the battery holder.

No.	Symbol	Approved Standards	Description
12		—	Positioning of cell To identify the battery holder itself and to identify the positioning of the cell(s) inside the battery holder.
13		IEC60417 No.5019	Protective earth To identify any terminal which is intended for connection to an external conductor for protection against electric shock in case of a fault, or the terminal of a protective earth electrode.
14		IEC60417 No.5017	Earth To identify an earth (ground) terminal in cases where neither the symbol No.13 is explicitly required.
15		IEC60417 No.5032	Alternating current To indicate on the rating plate that the equipment is suitable for alternating current only; to identify relevant terminals.
16		IEC60417 No.5031	Direct current To indicate on the rating plate that the equipment is suitable for direct current only; to identify relevant terminals.
17		IEC60417 No.5172	Class II equipment To identify equipment meeting the safety requirements specified for Class II equipment according to IEC 61140.
18		ISO 3864	General prohibition To identify actions or operations that are prohibited.

No.	Symbol	Approved Standards	Description
19		ISO 3864	Contact prohibition To indicate injury that could occur due to touching a specific part of the equipment.
20		—	Never look into the optical lens while the projector is on.
21		—	To indicate that the marked item don't place anything on projector.
22		ISO3864 IEC60825-1	Caution, laser radiation To indicate the equipment has a laser radiation part.
23		ISO 3864	Disassembly prohibition To indicate a risk of injury, such as electric shock, if the equipment is disassembled.
24		IEC60417 No. 5266	Standby, partial standby To indicate that part of the equipment is in the ready status.
25		ISO3864 IEC60417 No. 5057	Caution, movable parts To indicate that you must keep away from movable parts according to protection standards.

Parent topic: Notices

FCC Compliance Statement

For United States Users

This equipment has been tested and found to comply with the limits for a Class B digital device, pursuant to Part 15 of the FCC Rules. These limits are designed to provide reasonable protection against harmful interference in a residential installation. This equipment generates, uses, and can radiate radio frequency energy and, if not installed and used in accordance with the instructions, may cause harmful interference to radio communications. However, there is no guarantee that interference will not occur in a particular installation. If this equipment does cause interference to radio and television reception, which can be determined by turning the equipment off and on, the user is encouraged to try to correct the interference by one or more of the following measures:

- Reorient or relocate the receiving antenna.
- Increase the separation between the equipment and receiver.
- Connect the equipment into an outlet on a circuit different from that to which the receiver is connected.
- Consult the dealer or an experienced radio/TV technician for help.

WARNING

The connection of a non-shielded equipment interface cable to this equipment will invalidate the FCC Certification or Declaration of this device and may cause interference levels which exceed the limits established by the FCC for this equipment. It is the responsibility of the user to obtain and use a shielded equipment interface cable with this device. If this equipment has more than one interface connector, do not leave cables connected to unused interfaces. Changes or modifications not expressly approved by the manufacturer could void the user’s authority to operate the equipment.

For Canadian Users

CAN ICES-3(B)/NMB-3(B)

Parent topic: Notices

Open Source Software License

GNU GPL

This projector product includes the open source software programs which apply the GNU General Public License Version 2 or later version ("GPL Programs").

We provide the source code of the GPL Programs until five (5) years after the discontinuation of same model of this projector product.

If you desire to receive the source code of the GPL Programs, contact Epson.

These GPL Programs are WITHOUT ANY WARRANTY; without even the implied warranty of MERCHANTABILITY AND FITNESS FOR A PARTICULAR PURPOSE. See the GNU General Public License for more details.

The list of GPL Programs is as follows and the names of author are described in the source code of the GPL Programs

The list of GPL Programs

- busybox-1.21.0
- iptables-1.4.20
- linux-3.4.49
- patches
- udhcp 0.9.8
- wireless_tools 29
- dbus-1.6.18
- EPSON original drivers
- Stonestreet One Drivers
- mtd-utils-1.5.0
- linux-2.6.32
- u-boot-2001.06
- busybox-1.19.4
- backports-3.10.4-1
- wifi driver

The GNU General Public License Version 2 is as follows. You also can see the GNU General Public License Version 2 at http://www.gnu.org/licenses/.

GNU GENERAL PUBLIC LICENSE

Version 2, June 1991

Copyright (C) 1989, 1991 Free Software Foundation, Inc., 51 Franklin Street, Fifth Floor, Boston, MA 02110-1301 USA Everyone is permitted to copy and distribute verbatim copies of this license document, but changing it is not allowed.

Preamble

The licenses for most software are designed to take away your freedom to share and change it. By contrast, the GNU General Public License is intended to guarantee your freedom to share and change free software—to make sure the software is free for all its users. This General Public License applies to most of the Free Software Foundation's software and to any other program whose authors commit to using it. (Some other Free Software Foundation software is covered by the GNU Lesser General Public License instead.) You can apply it to your programs, too.

When we speak of free software, we are referring to freedom, not price. Our General Public Licenses are designed to make sure that you have the freedom to distribute copies of free software (and charge for this service if you wish), that you receive source code or can get it if you want it, that you can change the software or use pieces of it in new free programs; and that you know you can do these things.

To protect your rights, we need to make restrictions that forbid anyone to deny you these rights or to ask you to surrender the rights. These restrictions translate to certain responsibilities for you if you distribute copies of the software, or if you modify it.

For example, if you distribute copies of such a program, whether gratis or for a fee, you must give the recipients all the rights that you have. You must make sure that they, too, receive or can get the source code. And you must show them these terms so they know their rights.

We protect your rights with two steps: (1) copyright the software, and (2) offer you this license which gives you legal permission to copy, distribute and/or modify the software.

Also, for each author's protection and ours, we want to make certain that everyone understands that there is no warranty for this free software. If the software is modified by someone else and passed on, we want its recipients to know that what they have is not the original, so that any problems introduced by others will not reflect on the original authors' reputations.

Finally, any free program is threatened constantly by software patents. We wish to avoid the danger that redistributors of a free program will individually obtain patent licenses, in effect making the program proprietary. To prevent this, we have made it clear that any patent must be licensed for everyone's free use or not licensed at all.

The precise terms and conditions for copying, distribution and modification follow.

GNU GENERAL PUBLIC LICENSE TERMS AND CONDITIONS FOR COPYING, DISTRIBUTION AND MODIFICATION

0. This License applies to any program or other work which contains a notice placed by the copyright holder saying it may be distributed under the terms of this General Public License. The "Program", below, refers to any such program or work, and a "work based on the Program" means either the Program or any derivative work under copyright law: that is to say, a work containing the Program or a portion of it, either verbatim or with modifications and/or translated into another language. (Hereinafter, translation is included without limitation in the term "modification".) Each licensee is addressed as "you".

Activities other than copying, distribution and modification are not covered by this License; they are outside its scope. The act of running the Program is not restricted, and the output from the Program is covered only if its contents constitute a work based on the Program (independent of having been made by running the Program). Whether that is true depends on what the Program does.

1. You may copy and distribute verbatim copies of the Program's source code as you receive it, in any medium, provided that you conspicuously and appropriately publish on each copy an appropriate copyright notice and disclaimer of warranty; keep intact all the notices that refer to this License and to the absence of any warranty; and give any other recipients of the Program a copy of this License along with the Program.

You may charge a fee for the physical act of transferring a copy, and you may at your option offer warranty protection in exchange for a fee.

2. You may modify your copy or copies of the Program or any portion of it, thus forming a work based on the Program, and copy and distribute such modifications or work under the terms of Section 1 above, provided that you also meet all of these conditions:

a) You must cause the modified files to carry prominent notices stating that you changed the files and the date of any change.

b) You must cause any work that you distribute or publish, that in whole or in part contains or is derived from the Program or any part thereof, to be licensed as a whole at no charge to all third parties under the terms of this License.

c) If the modified program normally reads commands interactively when run, you must cause it, when started running for such interactive use in the most ordinary way, to print or display an announcement including an appropriate copyright notice and a notice that there is no warranty (or else, saying that you provide a warranty) and that users may redistribute the program under these conditions, and telling the user how to view a copy of this License. (Exception: if the Program itself is interactive but does not normally print such an announcement, your work based on the Program is not required to print an announcement.)

These requirements apply to the modified work as a whole. If identifiable sections of that work are not derived from the Program, and can be reasonably considered independent and separate works in themselves, then this License, and its terms, do not apply to those sections when you distribute them as separate works. But when you distribute the same sections as part of a whole which is a work based on the Program, the distribution of the whole must be on the terms of this License, whose permissions for other licensees extend to the entire whole, and thus to each and every part regardless of who wrote it.

Thus, it is not the intent of this section to claim rights or contest your rights to work written entirely by you; rather, the intent is to exercise the right to control the distribution of derivative or collective works based on the Program.

In addition, mere aggregation of another work not based on the Program with the Program (or with a work based on the Program) on a volume of a storage or distribution medium does not bring the other work under the scope of this License.

3. You may copy and distribute the Program (or a work based on it, under Section 2) in object code or executable form under the terms of Sections 1 and 2 above provided that you also do one of the following:

a) Accompany it with the complete corresponding machine-readable source code, which must be distributed under the terms of Sections 1 and 2 above on a medium customarily used for software interchange; or,

b) Accompany it with a written offer, valid for at least three years, to give any third party, for a charge no more than your cost of physically performing source distribution, a complete machine-readable copy of the corresponding source code, to be distributed under the terms of Sections 1 and 2 above on a medium customarily used for software interchange; or,

c) Accompany it with the information you received as to the offer to distribute corresponding source code. (This alternative is allowed only for noncommercial distribution and only if you received the program in object code or executable form with such an offer, in accord with Subsection b above.)

The source code for a work means the preferred form of the work for making modifications to it. For an executable work, complete source code means all the source code for all modules it contains, plus any associated interface definition files, plus the scripts used to control compilation and installation of the executable. However, as a special exception, the source code distributed need not include anything that is normally distributed (in either source or binary form) with the major components (compiler, kernel, and so on) of the operating system on which the executable runs, unless that component itself accompanies the executable.

If distribution of executable or object code is made by offering access to copy from a designated place, then offering equivalent access to copy the source code from the same place counts as distribution of the source code, even though third parties are not compelled to copy the source along with the object code.

4. You may not copy, modify, sublicense, or distribute the Program except as expressly provided under this License. Any attempt otherwise to copy, modify, sublicense or distribute the Program is void, and will automatically terminate your rights under this License. However, parties who have received copies, or rights, from you under this License will not have their licenses terminated so long as such parties remain in full compliance.

5. You are not required to accept this License, since you have not signed it. However, nothing else grants you permission to modify or distribute the Program or its derivative works. These actions are prohibited by law if you do not accept this License. Therefore, by modifying or distributing the Program (or any work based on the Program), you indicate your acceptance of this License to do so, and all its terms and conditions for copying, distributing or modifying the Program or works based on it.

6. Each time you redistribute the Program (or any work based on the Program), the recipient automatically receives a license from the original licensor to copy, distribute or modify the Program subject to these terms and conditions. You may not impose any further restrictions on the recipients' exercise of the rights granted herein. You are not responsible for enforcing compliance by third parties to this License.

7. If, as a consequence of a court judgment or allegation of patent infringement or for any other reason (not limited to patent issues), conditions are imposed on you (whether by court order, agreement or otherwise) that contradict the conditions of this License, they do not excuse you from the conditions of this License. If you cannot distribute so as to satisfy simultaneously your obligations under this License and any other pertinent obligations, then as a consequence you may not distribute the Program at all. For example, if a patent license would not permit royalty-free redistribution of the Program by all those who receive copies directly or indirectly through you, then the only way you could satisfy both it and this License would be to refrain entirely from distribution of the Program.

If any portion of this section is held invalid or unenforceable under any particular circumstance, the balance of the section is intended to apply and the section as a whole is intended to apply in other circumstances.

It is not the purpose of this section to induce you to infringe any patents or other property right claims or to contest validity of any such claims; this section has the sole purpose of protecting the integrity of the free software distribution system, which is implemented by public license practices. Many people have made generous contributions to the wide range of software distributed through that system in reliance on consistent application of that system; it is up to the author/donor to decide if he or she is willing to distribute software through any other system and a licensee cannot impose that choice.

This section is intended to make thoroughly clear what is believed to be a consequence of the rest of this License.

8. If the distribution and/or use of the Program is restricted in certain countries either by patents or by copyrighted interfaces, the original copyright holder who places the Program under this License may add an explicit geographical distribution limitation excluding those countries, so that distribution is permitted only in or among countries not thus excluded. In such case, this License incorporates the limitation as if written in the body of this License.

9. The Free Software Foundation may publish revised and/or new versions of the General Public License from time to time. Such new versions will be similar in spirit to the present version, but may differ in detail to address new problems or concerns.

Each version is given a distinguishing version number. If the Program specifies a version number of this License which applies to it and "any later version", you have the option of following the terms and conditions either of that version or of any later version published by the Free Software Foundation. If the Program does not specify a version number of this License, you may choose any version ever published by the Free Software Foundation.

10. If you wish to incorporate parts of the Program into other free programs whose distribution conditions are different, write to the author to ask for permission. For software which is copyrighted by the Free Software Foundation, write to the Free Software Foundation; we sometimes make exceptions for this. Our decision will be guided by the two goals of preserving the free status of all derivatives of our free software and of promoting the sharing and reuse of software generally.

NO WARRANTY

11. BECAUSE THE PROGRAM IS LICENSED FREE OF CHARGE, THERE IS NO WARRANTY FOR THE PROGRAM, TO THE EXTENT PERMITTED BY APPLICABLE LAW. EXCEPT WHEN OTHERWISE STATED IN WRITING THE COPYRIGHT HOLDERS AND/OR OTHER PARTIES PROVIDE THE PROGRAM "AS IS" WITHOUT WARRANTY OF ANY KIND, EITHER EXPRESSED OR IMPLIED, INCLUDING, BUT NOT LIMITED TO, THE IMPLIED WARRANTIES OF MERCHANTABILITY AND FITNESS FOR A PARTICULAR PURPOSE. THE ENTIRE RISK AS TO THE QUALITY AND PERFORMANCE OF THE PROGRAM IS WITH YOU. SHOULD THE PROGRAM PROVE DEFECTIVE, YOU ASSUME THE COST OF ALL NECESSARY SERVICING, REPAIR OR CORRECTION.

12. IN NO EVENT UNLESS REQUIRED BY APPLICABLE LAW OR AGREED TO IN WRITING WILL ANY COPYRIGHT HOLDER, OR ANY OTHER PARTY WHO MAY MODIFY AND/OR REDISTRIBUTE THE PROGRAM AS PERMITTED ABOVE, BE LIABLE TO YOU FOR DAMAGES, INCLUDING ANY GENERAL, SPECIAL, INCIDENTAL OR CONSEQUENTIAL DAMAGES ARISING OUT OF THE USE OR INABILITY TO USE THE PROGRAM (INCLUDING BUT NOT LIMITED TO LOSS OF DATA OR DATA BEING RENDERED INACCURATE OR LOSSES SUSTAINED BY YOU OR THIRD PARTIES OR A FAILURE OF THE PROGRAM TO OPERATE WITH ANY OTHER PROGRAMS), EVEN IF SUCH HOLDER OR OTHER PARTY HAS BEEN ADVISED OF THE POSSIBILITY OF SUCH DAMAGES.

How to Apply These Terms to Your New Programs

If you develop a new program, and you want it to be of the greatest possible use to the public, the best way to achieve this is to make it free software which everyone can redistribute and change under these terms.

To do so, attach the following notices to the program. It is safest to attach them to the start of each source file to most effectively convey the exclusion of warranty; and each file should have at least the "copyright" line and a pointer to where the full notice is found.

<one line to give the program's name and a brief idea of what it does.>

Copyright (C) <year> <name of author>

This program is free software; you can redistribute it and/or modify it under the terms of the GNU General Public License as published by the Free Software Foundation; either version 2 of the License, or (at your option) any later version.

This program is distributed in the hope that it will be useful, but WITHOUT ANY WARRANTY; without even the implied warranty of MERCHANTABILITY or FITNESS FOR A PARTICULAR PURPOSE. See the GNU General Public License for more details.

You should have received a copy of the GNU General Public License along with this program; if not, write to the Free Software Foundation, Inc., 51 Franklin Street, Fifth Floor, Boston, MA 02110-1301 USA.

Also add information on how to contact you by electronic and paper mail.

If the program is interactive, make it output a short notice like this when it starts in an interactive mode:

Gnomovision version 69, Copyright (C) year name of author Gnomovision comes with ABSOLUTELY NO WARRANTY; for details type `show w'. This is free software, and you are welcome to redistribute it under certain conditions; type `show c' for details.

The hypothetical commands `show w' and `show c' should show the appropriate parts of the General Public License. Of course, the commands you use may be called something other than `show w' and `show c'; they could even be mouse-clicks or menu items--whatever suits your program.

You should also get your employer (if you work as a programmer) or your school, if any, to sign a "copyright disclaimer" for the program, if necessary. Here is a sample; alter the names:

Yoyodyne, Inc., hereby disclaims all copyright interest in the program `Gnomovision' (which makes passes at compilers) written by James Hacker.

<signature of Ty Coon>, 1 April 1989

Ty Coon, President of Vice

This General Public License does not permit incorporating your program into proprietary programs. If your program is a subroutine library, you may consider it more useful to permit linking proprietary applications with the library. If this is what you want to do, use the GNU Lesser General Public License instead of this License.

GNU LGPL

This projector product includes the open source software programs which apply the GNU Lesser General Public License Version 2 or later version ("LGPL Programs").

We provide the source code of the LGPL Programs until five (5) years after the discontinuation of same model of this projector product.

If you desire to receive the source code of the LGPL Programs, please contact Epson.

These LGPL Programs are WITHOUT ANY WARRANTY; without even the implied warranty of MERCHANTABILITY AND FITNESS FOR A PARTICULAR PURPOSE. See the GNU General Public License for more details.

The list of LGPL Programs is as follows and the names of author are described in the source code of the LGPL Programs.

LGPL Programs

- glibc 2.17
- SDL-1.2.15
- SDL-Image
- alsa-lib-1.0.27.2
- libdbus-c++-0.9.0
- grencode-3.4.2
- libnl-3.2.24
- libiconv-1.14

The GNU Lesser General Public License Version 2 is as follows. You also can see the GNU Lesser General Public License Version 2 at http://www.gnu.org/licenses/.

GNU LESSER GENERAL PUBLIC LICENSE

Version 2.1, February 1999

Copyright (C) 1991, 1999 Free Software Foundation, Inc. 51 Franklin Street, Fifth Floor, Boston, MA 02110-1301 USA Everyone is permitted to copy and distribute verbatim copies of this license document, but changing it is not allowed.

[This is the first released version of the Lesser GPL. It also counts as the successor of the GNU Library Public License, version 2, hence the version number 2.1.]

Preamble

The licenses for most software are designed to take away your freedom to share and change it. By contrast, the GNU General Public Licenses are intended to guarantee your freedom to share and change free software—to make sure the software is free for all its users.

This license, the Lesser General Public License, applies to some specially designated software packages--typically libraries--of the Free Software Foundation and other authors who decide to use it. You can use it too, but we suggest you first think carefully about whether this license or the ordinary General Public License is the better strategy to use in any particular case, based on the explanations below.

When we speak of free software, we are referring to freedom of use, not price. Our General Public Licenses are designed to make sure that you have the freedom to distribute copies of free software (and charge for this service if you wish); that you receive source code or can get it if you want it; that you can

change the software and use pieces of it in new free programs; and that you are informed that you can do these things.

To protect your rights, we need to make restrictions that forbid distributors to deny you these rights or to ask you to surrender these rights. These restrictions translate to certain responsibilities for you if you distribute copies of the library or if you modify it.

For example, if you distribute copies of the library, whether gratis or for a fee, you must give the recipients all the rights that we gave you. You must make sure that they, too, receive or can get the source code. If you link other code with the library, you must provide complete object files to the recipients, so that they can relink them with the library after making changes to the library and recompiling it. And you must show them these terms so they know their rights.

We protect your rights with a two-step method: (1) we copyright the library, and (2) we offer you this license, which gives you legal permission to copy, distribute and/or modify the library.

To protect each distributor, we want to make it very clear that there is no warranty for the free library. Also, if the library is modified by someone else and passed on, the recipients should know that what they have is not the original version, so that the original author's reputation will not be affected by problems that might be introduced by others.

Finally, software patents pose a constant threat to the existence of any free program. We wish to make sure that a company cannot effectively restrict the users of a free program by obtaining a restrictive license from a patent holder. Therefore, we insist that any patent license obtained for a version of the library must be consistent with the full freedom of use specified in this license.

Most GNU software, including some libraries, is covered by the ordinary GNU General Public License. This license, the GNU Lesser General Public License, applies to certain designated libraries, and is quite different from the ordinary General Public License. We use this license for certain libraries in order to permit linking those libraries into non-free programs.

When a program is linked with a library, whether statically or using a shared library, the combination of the two is legally speaking a combined work, a derivative of the original library. The ordinary General Public License therefore permits such linking only if the entire combination fits its criteria of freedom. The Lesser General Public License permits more lax criteria for linking other code with the library.

We call this license the "Lesser" General Public License because it does Less to protect the user's freedom than the ordinary General Public License. It also provides other free software developers Less of an advantage over competing non-free programs. These disadvantages are the reason we use the ordinary General Public License for many libraries. However, the Lesser license provides advantages in certain special circumstances.

For example, on rare occasions, there may be a special need to encourage the widest possible use of a certain library, so that it becomes a de-facto standard. To achieve this, non-free programs must be allowed to use the library. A more frequent case is that a free library does the same job as widely used

non-free libraries. In this case, there is little to gain by limiting the free library to free software only, so we use the Lesser General Public License.

In other cases, permission to use a particular library in non-free programs enables a greater number of people to use a large body of free software. For example, permission to use the GNU C Library in non-free programs enables many more people to use the whole GNU operating system, as well as its variant, the GNU/Linux operating system.

Although the Lesser General Public License is Less protective of the users' freedom, it does ensure that the user of a program that is linked with the Library has the freedom and the wherewithal to run that program using a modified version of the Library.

The precise terms and conditions for copying, distribution and modification follow. Pay close attention to the difference between a "work based on the library" and a "work that uses the library". The former contains code derived from the library, whereas the latter must be combined with the library in order to run.

GNU LESSER GENERAL PUBLIC LICENSE TERMS AND CONDITIONS FOR COPYING, DISTRIBUTION AND MODIFICATION

0. This License Agreement applies to any software library or other program which contains a notice placed by the copyright holder or other authorized party saying it may be distributed under the terms of this Lesser General Public License (also called "this License"). Each licensee is addressed as "you".

A "library" means a collection of software functions and/or data prepared so as to be conveniently linked with application programs (which use some of those functions and data) to form executables.

The "Library", below, refers to any such software library or work which has been distributed under these terms. A "work based on the Library" means either the Library or any derivative work under copyright law: that is to say, a work containing the Library or a portion of it, either verbatim or with modifications and/or translated straightforwardly into another language. (Hereinafter, translation is included without limitation in the term "modification".)

"Source code" for a work means the preferred form of the work for making modifications to it. For a library, complete source code means all the source code for all modules it contains, plus any associated interface definition files, plus the scripts used to control compilation and installation of the library.

Activities other than copying, distribution and modification are not covered by this License; they are outside its scope. The act of running a program using the Library is not restricted, and output from such a program is covered only if its contents constitute a work based on the Library (independent of the use of the Library in a tool for writing it). Whether that is true depends on what the Library does and what the program that uses the Library does.

1. You may copy and distribute verbatim copies of the Library's complete source code as you receive it, in any medium, provided that you conspicuously and appropriately publish on each copy an appropriate

copyright notice and disclaimer of warranty; keep intact all the notices that refer to this License and to the absence of any warranty; and distribute a copy of this License along with the Library.

You may charge a fee for the physical act of transferring a copy, and you may at your option offer warranty protection in exchange for a fee.

2. You may modify your copy or copies of the Library or any portion of it, thus forming a work based on the Library, and copy and distribute such modifications or work under the terms of Section 1 above, provided that you also meet all of these conditions:

a) The modified work must itself be a software library.

b) You must cause the files modified to carry prominent notices stating that you changed the files and the date of any change.

c) You must cause the whole of the work to be licensed at no charge to all third parties under the terms of this License.

d) If a facility in the modified Library refers to a function or a table of data to be supplied by an application program that uses the facility, other than as an argument passed when the facility is invoked, then you must make a good faith effort to ensure that, in the event an application does not supply such function or table, the facility still operates, and performs whatever part of its purpose remains meaningful.

(For example, a function in a library to compute square roots has a purpose that is entirely well-defined independent of the application. Therefore, Subsection 2d requires that any application-supplied function or table used by this function must be optional: if the application does not supply it, the square root function must still compute square roots.)

These requirements apply to the modified work as a whole. If identifiable sections of that work are not derived from the Library, and can be reasonably considered independent and separate works in themselves, then this License, and its terms, do not apply to those sections when you distribute them as separate works. But when you distribute the same sections as part of a whole which is a work based on the Library, the distribution of the whole must be on the terms of this License, whose permissions for other licensees extend to the entire whole, and thus to each and every part regardless of who wrote it.

Thus, it is not the intent of this section to claim rights or contest your rights to work written entirely by you; rather, the intent is to exercise the right to control the distribution of derivative or collective works based on the Library.

In addition, mere aggregation of another work not based on the Library with the Library (or with a work based on the Library) on a volume of a storage or distribution medium does not bring the other work under the scope of this License.

3. You may opt to apply the terms of the ordinary GNU General Public License instead of this License to a given copy of the Library. To do this, you must alter all the notices that refer to this License, so that they refer to the ordinary GNU General Public License, version 2, instead of to this License. (If a newer

version than version 2 of the ordinary GNU General Public License has appeared, then you can specify that version instead if you wish.) Do not make any other change in these notices.

Once this change is made in a given copy, it is irreversible for that copy, so the ordinary GNU General Public License applies to all subsequent copies and derivative works made from that copy.

This option is useful when you wish to copy part of the code of the Library into a program that is not a library.

4. You may copy and distribute the Library (or a portion or derivative of it, under Section 2) in object code or executable form under the terms of Sections 1 and 2 above provided that you accompany it with the complete corresponding machine-readable source code, which must be distributed under the terms of Sections 1 and 2 above on a medium customarily used for software interchange.

If distribution of object code is made by offering access to copy from a designated place, then offering equivalent access to copy the source code from the same place satisfies the requirement to distribute the source code, even though third parties are not compelled to copy the source along with the object code.

5. A program that contains no derivative of any portion of the Library, but is designed to work with the Library by being compiled or linked with it, is called a "work that uses the Library". Such a work, in isolation, is not a derivative work of the Library, and therefore falls outside the scope of this License.

However, linking a "work that uses the Library" with the Library creates an executable that is a derivative of the Library (because it contains portions of the Library), rather than a "work that uses the library". The executable is therefore covered by this License. Section 6 states terms for distribution of such executables.

When a "work that uses the Library" uses material from a header file that is part of the Library, the object code for the work may be a derivative work of the Library even though the source code is not. Whether this is true is especially significant if the work can be linked without the Library, or if the work is itself a library. The threshold for this to be true is not precisely defined by law.

If such an object file uses only numerical parameters, data structure layouts and accessors, and small macros and small inline functions (ten lines or less in length), then the use of the object file is unrestricted, regardless of whether it is legally a derivative work. (Executables containing this object code plus portions of the Library will still fall under Section 6.)

Otherwise, if the work is a derivative of the Library, you may distribute the object code for the work under the terms of Section 6. Any executables containing that work also fall under Section 6, whether or not they are linked directly with the Library itself.

6. As an exception to the Sections above, you may also combine or link a "work that uses the Library" with the Library to produce a work containing portions of the Library, and distribute that work under terms of your choice, provided that the terms permit modification of the work for the customer's own use and reverse engineering for debugging such modifications.

You must give prominent notice with each copy of the work that the Library is used in it and that the Library and its use are covered by this License. You must supply a copy of this License. If the work during execution displays copyright notices, you must include the copyright notice for the Library among them, as well as a reference directing the user to the copy of this License. Also, you must do one of these things:

a) Accompany the work with the complete corresponding machine-readable source code for the Library including whatever changes were used in the work (which must be distributed under Sections 1 and 2 above); and, if the work is an executable linked with the Library, with the complete machine-readable "work that uses the Library", as object code and/or source code, so that the user can modify the Library and then relink to produce a modified executable containing the modified Library. (It is understood that the user who changes the contents of definitions files in the Library will not necessarily be able to recompile the application to use the modified definitions.)

b) Use a suitable shared library mechanism for linking with the Library. A suitable mechanism is one that (1) uses at run time a copy of the library already present on the user's computer system, rather than copying library functions into the executable, and (2) will operate properly with a modified version of the library, if the user installs one, as long as the modified version is interface-compatible with the version that the work was made with.

c) Accompany the work with a written offer, valid for at least three years, to give the same user the materials specified in Subsection 6a, above, for a charge no more than the cost of performing this distribution.

d) If distribution of the work is made by offering access to copy from a designated place, offer equivalent access to copy the above specified materials from the same place.

e) Verify that the user has already received a copy of these materials or that you have already sent this user a copy.

For an executable, the required form of the "work that uses the Library" must include any data and utility programs needed for reproducing the executable from it. However, as a special exception, the materials to be distributed need not include anything that is normally distributed (in either source or binary form) with the major components (compiler, kernel, and so on) of the operating system on which the executable runs, unless that component itself accompanies the executable.

It may happen that this requirement contradicts the license restrictions of other proprietary libraries that do not normally accompany the operating system. Such a contradiction means you cannot use both them and the Library together in an executable that you distribute.

7. You may place library facilities that are a work based on the Library side-by-side in a single library together with other library facilities not covered by this License, and distribute such a combined library, provided that the separate distribution of the work based on the Library and of the other library facilities is otherwise permitted, and provided that you do these two things:

a) Accompany the combined library with a copy of the same work based on the Library, uncombined with any other library facilities. This must be distributed under the terms of the Sections above.

b) Give prominent notice with the combined library of the fact that part of it is a work based on the Library, and explaining where to find the accompanying uncombined form of the same work.

8. You may not copy, modify, sublicense, link with, or distribute the Library except as expressly provided under this License. Any attempt otherwise to copy, modify, sublicense, link with, or distribute the Library is void, and will automatically terminate your rights under this License. However, parties who have received copies, or rights, from you under this License will not have their licenses terminated so long as such parties remain in full compliance.

9. You are not required to accept this License, since you have not signed it. However, nothing else grants you permission to modify or distribute the Library or its derivative works. These actions are prohibited by law if you do not accept this License. Therefore, by modifying or distributing the Library (or any work based on the Library), you indicate your acceptance of this License to do so, and all its terms and conditions for copying, distributing or modifying the Library or works based on it.

10. Each time you redistribute the Library (or any work based on the Library), the recipient automatically receives a license from the original licensor to copy, distribute, link with or modify the Library subject to these terms and conditions. You may not impose any further restrictions on the recipients' exercise of the rights granted herein. You are not responsible for enforcing compliance by third parties with this License.

11. If, as a consequence of a court judgment or allegation of patent infringement or for any other reason (not limited to patent issues), conditions are imposed on you (whether by court order, agreement or otherwise) that contradict the conditions of this License, they do not excuse you from the conditions of this License. If you cannot distribute so as to satisfy simultaneously your obligations under this License and any other pertinent obligations, then as a consequence you may not distribute the Library at all. For example, if a patent license would not permit royalty-free redistribution of the Library by all those who receive copies directly or indirectly through you, then the only way you could satisfy both it and this License would be to refrain entirely from distribution of the Library.

If any portion of this section is held invalid or unenforceable under any particular circumstance, the balance of the section is intended to apply, and the section as a whole is intended to apply in other circumstances.

It is not the purpose of this section to induce you to infringe any patents or other property right claims or to contest validity of any such claims; this section has the sole purpose of protecting the integrity of the free software distribution system which is implemented by public license practices. Many people have made generous contributions to the wide range of software distributed through that system in reliance on consistent application of that system; it is up to the author/donor to decide if he or she is willing to distribute software through any other system and a licensee cannot impose that choice.

This section is intended to make thoroughly clear what is believed to be a consequence of the rest of this License.

12. If the distribution and/or use of the Library is restricted in certain countries either by patents or by copyrighted interfaces, the original copyright holder who places the Library under this License may add an explicit geographical distribution limitation excluding those countries, so that distribution is permitted only in or among countries not thus excluded. In such case, this License incorporates the limitation as if written in the body of this License.

13. The Free Software Foundation may publish revised and/or new versions of the Lesser General Public License from time to time. Such new versions will be similar in spirit to the present version, but may differ in detail to address new problems or concerns.

Each version is given a distinguishing version number. If the Library specifies a version number of this License which applies to it and "any later version", you have the option of following the terms and conditions either of that version or of any later version published by the Free Software Foundation. If the Library does not specify a license version number, you may choose any version ever published by the Free Software Foundation.

14. If you wish to incorporate parts of the Library into other free programs whose distribution conditions are incompatible with these, write to the author to ask for permission. For software which is copyrighted by the Free Software Foundation, write to the Free Software Foundation; we sometimes make exceptions for this. Our decision will be guided by the two goals of preserving the free status of all derivatives of our free software and of promoting the sharing and reuse of software generally.

NO WARRANTY

15. BECAUSE THE LIBRARY IS LICENSED FREE OF CHARGE, THERE IS NO WARRANTY FOR THE LIBRARY, TO THE EXTENT PERMITTED BY APPLICABLE LAW. EXCEPT WHEN OTHERWISE STATED IN WRITING THE COPYRIGHT HOLDERS AND/OR OTHER PARTIES PROVIDE THE LIBRARY "AS IS" WITHOUT WARRANTY OF ANY KIND, EITHER EXPRESSED OR IMPLIED, INCLUDING, BUT NOT LIMITED TO, THE IMPLIED WARRANTIES OF MERCHANTABILITY AND FITNESS FOR A PARTICULAR PURPOSE. THE ENTIRE RISK AS TO THE QUALITY AND PERFORMANCE OF THE LIBRARY IS WITH YOU. SHOULD THE LIBRARY PROVE DEFECTIVE, YOU ASSUME THE COST OF ALL NECESSARY SERVICING, REPAIR OR CORRECTION.

16. IN NO EVENT UNLESS REQUIRED BY APPLICABLE LAW OR AGREED TO IN WRITING WILL ANY COPYRIGHT HOLDER, OR ANY OTHER PARTY WHO MAY MODIFY AND/OR REDISTRIBUTE THE LIBRARY AS PERMITTED ABOVE, BE LIABLE TO YOU FOR DAMAGES, INCLUDING ANY GENERAL, SPECIAL, INCIDENTAL OR CONSEQUENTIAL DAMAGES ARISING OUT OF THE USE OR INABILITY TO USE THE LIBRARY (INCLUDING BUT NOT LIMITED TO LOSS OF DATA OR DATA BEING RENDERED INACCURATE OR LOSSES SUSTAINED BY YOU OR THIRD PARTIES OR A FAILURE OF THE LIBRARY TO OPERATE WITH ANY OTHER SOFTWARE), EVEN IF SUCH HOLDER OR OTHER PARTY HAS BEEN ADVISED OF THE POSSIBILITY OF SUCH DAMAGES.

END OF TERMS AND CONDITIONS

How to Apply These Terms to Your New Libraries

If you develop a new library, and you want it to be of the greatest possible use to the public, we recommend making it free software that everyone can redistribute and change. You can do so by permitting redistribution under these terms (or, alternatively, under the terms of the ordinary General Public License).

To apply these terms, attach the following notices to the library. It is safest to attach them to the start of each source file to most effectively convey the exclusion of warranty; and each file should have at least the "copyright" line and a pointer to where the full notice is found.

<one line to give the library's name and a brief idea of what it does.>

Copyright (C) <year> <name of author>

This library is free software; you can redistribute it and/or modify it under the terms of the GNU Lesser General Public License as published by the Free Software Foundation; either version 2.1 of the License, or (at your option) any later version.

This library is distributed in the hope that it will be useful, but WITHOUT ANY WARRANTY; without even the implied warranty of MERCHANTABILITY or FITNESS FOR A PARTICULAR PURPOSE. See the GNU Lesser General Public License for more details.

You should have received a copy of the GNU Lesser General Public License along with this library; if not, write to the Free Software Foundation, Inc., 51 Franklin Street, Fifth Floor, Boston, MA 02110-1301 USA

Also add information on how to contact you by electronic and paper mail.

You should also get your employer (if you work as a programmer) or your school, if any, to sign a "copyright disclaimer" for the library, if necessary. Here is a sample; alter the names:

Yoyodyne, Inc., hereby disclaims all copyright interest in the library `Frob' (a library for tweaking knobs) written by James Random Hacker.

<signature of Ty Coon>, 1 April 1990

Ty Coon, President of Vice

That's all there is to it!

BSD License (Berkeley Software Distribution License)

This projector product includes the open source software program "University of California, Berkeley License (Berkeley Software Distribution License)" which applies the terms and conditions provided by owner of the copyright to the "BSD License".

The "BSD License" are WITHOUT ANY WARRANTY; without even the implied warranty of MERCHANTABILITY AND FITNESS FOR A PARTICULAR PURPOSE.

List of BSD License programs

- tcpdump-4.2.1
- libpcap-1.2.1

License terms of conditions of each program which are provided by owner of the copyright to the "BSD License" are as follows.

Copyright (c) The Regents of the University of California. All rights reserved.

This code is derived from software contributed to Berkeley by Kenneth Almquist.

Redistribution and use in source and binary forms, with or without modification, are permitted provided that the following conditions are met:

1. Redistributions of source code must retain the above copyright notice, this list of conditions and the following disclaimer.

2. Redistributions in binary form must reproduce the above copyright notice, this list of conditions and the following disclaimer in the documentation and/or other materials provided with the distribution.

3. Neither the name of the University nor the names of its contributors may be used to endorse or promote products derived from this software without specific prior written permission.

THIS SOFTWARE IS PROVIDED BY THE REGENTS AND CONTRIBUTORS "AS IS" AND ANY EXPRESS OR IMPLIED WARRANTIES, INCLUDING, BUT NOT LIMITED TO, THE IMPLIED WARRANTIES OF MERCHANTABILITY AND FITNESS FOR A PARTICULAR PURPOSE ARE DISCLAIMED. IN NO EVENT SHALL THE REGENTS OR CONTRIBUTORS BE LIABLE FOR ANY DIRECT, INDIRECT, INCIDENTAL, SPECIAL, EXEMPLARY, OR CONSEQUENTIAL DAMAGES (INCLUDING, BUT NOT LIMITED TO, PROCUREMENT OF SUBSTITUTE GOODS OR SERVICES; LOSS OF USE, DATA, OR PROFITS; OR BUSINESS INTERRUPTION) HOWEVER CAUSED AND ON ANY THEORY OF LIABILITY, WHETHER IN CONTRACT, STRICT LIABILITY, OR TORT (INCLUDING NEGLIGENCE OR OTHERWISE) ARISING IN ANY WAY OUT OF THE USE OF THIS SOFTWARE, EVEN IF ADVISED OF THE POSSIBILITY OF SUCH DAMAGE.

libjpeg

This projector product includes the open source software program "libjpeg" which applies the terms and conditions provided by owner of the copyright to the "libjpeg".

The "libjpeg" are WITHOUT ANY WARRANTY; without even the implied warranty of MERCHANTABILITY AND FITNESS FOR A PARTICULAR PURPOSE.

List of libjpeg programs

- libjpeg-6b
- libjpeg-8b

License terms of conditions of each program which are provided by owner of the copyright to the "libjpeg" are as follows.

Copyright (C) 1994-1997, Thomas G. Lane. This file is part of the Independent JPEG Group's software. For conditions of distribution and use, see the accompanying README file.

This distribution contains the sixth public release of the Independent JPEG Group's free JPEG software. You are welcome to redistribute this software and to use it for any purpose, subject to the conditions under LEGAL ISSUES, below.

LEGAL ISSUES

==========

In plain English:

1. We don't promise that this software works. (But if you find any bugs, please let us know!)

2. You can use this software for whatever you want. You don't have to pay us.

3. You may not pretend that you wrote this software. If you use it in a program, you must acknowledge somewhere in your documentation that you've used the IJG code.

In legalese:

The authors make NO WARRANTY or representation, either express or implied, with respect to this software, its quality, accuracy, merchantability, or fitness for a particular purpose. This software is provided "AS IS", and you, its user, assume the entire risk as to its quality and accuracy.

This software is copyright (C) 1991-1998, Thomas G. Lane. All Rights Reserved except as specified below.

Permission is hereby granted to use, copy, modify, and distribute this software (or portions thereof) for any purpose, without fee, subject to these conditions:

(1) If any part of the source code for this software is distributed, then this README file must be included, with this copyright and no-warranty notice unaltered; and any additions, deletions, or changes to the original files must be clearly indicated in accompanying documentation.

(2) If only executable code is distributed, then the accompanying documentation must state that "this software is based in part on the work of the Independent JPEG Group".

(3) Permission for use of this software is granted only if the user accepts full responsibility for any undesirable consequences; the authors accept NO LIABILITY for damages of any kind.

These conditions apply to any software derived from or based on the IJG code, not just to the unmodified library. If you use our work, you ought to acknowledge us.

Permission is NOT granted for the use of any IJG author's name or company name in advertising or publicity relating to this software or products derived from it. This software may be referred to only as "the Independent JPEG Group's software".

We specifically permit and encourage the use of this software as the basis of commercial products, provided that all warranty or liability claims are assumed by the product vendor.

ansi2knr.c is included in this distribution by permission of L. Peter Deutsch, sole proprietor of its copyright holder, Aladdin Enterprises of Menlo Park, CA. ansi2knr.c is NOT covered by the above copyright and conditions, but instead by the usual distribution terms of the Free Software Foundation; principally, that you must include source code if you redistribute it. (See the file ansi2knr.c for full details.) However, since ansi2knr.c is not needed as part of any program generated from the IJG code, this does not limit you more than the foregoing paragraphs do.

The Unix configuration script "configure" was produced with GNU Autoconf. It is copyright by the Free Software Foundation but is freely distributable. The same holds for its supporting scripts (config.guess, config.sub, ltconfig, ltmain.sh). Another support script, install-sh, is copyright by M.I.T. but is also freely distributable.

It appears that the arithmetic coding option of the JPEG spec is covered by patents owned by IBM, AT&T, and Mitsubishi. Hence arithmetic coding cannot legally be used without obtaining one or more licenses. For this reason, support for arithmetic coding has been removed from the free JPEG software. (Since arithmetic coding provides only a marginal gain over the unpatented Huffman mode, it is unlikely that very many implementations will support it.) So far as we are aware, there are no patent restrictions on the remaining code.

The IJG distribution formerly included code to read and write GIF files. To avoid entanglement with the Unisys LZW patent, GIF reading support has been removed altogether, and the GIF writer has been simplified to produce "uncompressed GIFs". This technique does not use the LZW algorithm; the resulting GIF files are larger than usual, but are readable by all standard GIF decoders.

We are required to state that "The Graphics Interchange Format(c) is the Copyright property of CompuServe Incorporated. GIF(sm) is a Service Mark property of CompuServe Incorporated."

libpng

This projector product includes the open source software program "libpng" which applies the terms and conditions provided by owner of the copyright to the "libpng".

The "libpng" are WITHOUT ANY WARRANTY; without even the implied warranty of MERCHANTABILITY AND FITNESS FOR A PARTICULAR PURPOSE.

List of libpng programs

- libpng-1.2.49
- libpng-1.2.44

License terms of conditions of each program which are provided by owner of the copyright to the "libpng" are as follows.

This copy of the libpng notices is provided for your convenience. In case of any discrepancy between this copy and the notices in the file png.h that is included in the libpng distribution, the latter shall prevail.

COPYRIGHT NOTICE, DISCLAIMER, and LICENSE:

If you modify libpng you may insert additional notices immediately following this sentence.

This code is released under the libpng license.

libpng versions 1.2.6, August 15, 2004, through 1.2.49, March 29, 2012, are Copyright (c) 2004, 2006-2009 Glenn Randers-Pehrson, and are distributed according to the same disclaimer and license as libpng-1.2.5 with the following individual added to the list of Contributing Authors

Cosmin Truta

libpng versions 1.0.7, July 1, 2000, through 1.2.5 - October 3, 2002, are Copyright (c) 2000-2002 Glenn Randers-Pehrson, and are distributed according to the same disclaimer and license as libpng-1.0.6 with the following individuals added to the list of Contributing Authors

Simon-Pierre Cadieux

Eric S. Raymond

Gilles Vollant

and with the following additions to the disclaimer:

There is no warranty against interference with your enjoyment of the library or against infringement. There is no warranty that our efforts or the library will fulfill any of your particular purposes or needs. This library is provided with all faults, and the entire risk of satisfactory quality, performance, accuracy, and effort is with the user.

libpng versions 0.97, January 1998, through 1.0.6, March 20, 2000, are Copyright (c) 1998, 1999 Glenn Randers-Pehrson, and are distributed according to the same disclaimer and license as libpng-0.96, with the following individuals added to the list of Contributing Authors:

Tom Lane

Glenn Randers-Pehrson

Willem van Schaik

libpng versions 0.89, June 1996, through 0.96, May 1997, are Copyright (c) 1996, 1997 Andreas Dilger Distributed according to the same disclaimer and license as libpng-0.88, with the following individuals added to the list of Contributing Authors:

John Bowler

Kevin Bracey

Sam Bushell

Magnus Holmgren

Greg Roelofs

Tom Tanner

libpng versions 0.5, May 1995, through 0.88, January 1996, are Copyright (c) 1995, 1996 Guy Eric Schalnat, Group 42, Inc.

For the purposes of this copyright and license, "Contributing Authors" is defined as the following set of individuals:

Andreas Dilger

Dave Martindale

Guy Eric Schalnat

Paul Schmidt

Tim Wegner

The PNG Reference Library is supplied "AS IS". The Contributing Authors and Group 42, Inc. disclaim all warranties, expressed or implied, including, without limitation, the warranties of merchantability and of fitness for any purpose. The Contributing Authors and Group 42, Inc. assume no liability for direct, indirect, incidental, special, exemplary, or consequential damages, which may result from the use of the PNG Reference Library, even if advised of the possibility of such damage.

Permission is hereby granted to use, copy, modify, and distribute this source code, or portions hereof, for any purpose, without fee, subject to the following restrictions:

1. The origin of this source code must not be misrepresented.

2. Altered versions must be plainly marked as such and must not be misrepresented as being the original source.

3. This Copyright notice may not be removed or altered from any source or altered source distribution.

The Contributing Authors and Group 42, Inc. specifically permit, without fee, and encourage the use of this source code as a component to supporting the PNG file format in commercial products. If you use this source code in a product, acknowledgment is not required but would be appreciated.

A "png_get_copyright" function is available, for convenient use in "about" boxes and the like:

printf("%s",png_get_copyright(NULL));

Also, the PNG logo (in PNG format, of course) is supplied in the files "pngbar.png" and "pngbar.jpg (88x31) and "pngnow.png" (98x31).

Libpng is OSI Certified Open Source Software. OSI Certified Open Source is a certification mark of the Open Source Initiative.

Glenn Randers-Pehrson

glennrp at users.sourceforge.net

March 29, 2012

zlib

This projector product includes the open source software program "zlib" which applies the terms and conditions provided by owner of the copyright to the "zlib".

The "zlib" are WITHOUT ANY WARRANTY; without even the implied warranty of MERCHANTABILITY AND FITNESS FOR A PARTICULAR PURPOSE.

List of zlib programs

- zlib-1.1.4
- zlib-1.2.5

License terms of conditions of each program which are provided by owner of the copyright to the "zlib" are as follows.

Copyright notice:

(C) 1995-1998 Jean-loup Gailly and Mark Adler

This software is provided 'as-is', without any express or implied warranty. In no event will the authors be held liable for any damages arising from the use of this software.

Permission is granted to anyone to use this software for any purpose, including commercial applications, and to alter it and redistribute it freely, subject to the following restrictions:

1. The origin of this software must not be misrepresented; you must not claim that you wrote the original software. If you use this software in a product, an acknowledgment in the product documentation would be appreciated but is not required.

2. Altered source versions must be plainly marked as such, and must not be misrepresented as being the original software.

3. This notice may not be removed or altered from any source distribution.

Jean-loup Gailly

jloup@gzip.org

Mark Adler

madler@alumni.caltech.edu

If you use the zlib library in a product, we would appreciate *not* receiving lengthy legal documents to sign. The sources are provided for free but without warranty of any kind. The library has been entirely written by Jean-loup Gailly and Mark Adler; it does not include third-party code.

If you redistribute modified sources, we would appreciate that you include in the file ChangeLog history information documenting your changes.

aes-src-29-04-09

This projector product includes the open source software program "aes-src-29-04-09" which applies the terms and conditions provided by owner of the copyright to the "aes-src-29-04-09".

The "aes-src-29-04-09" are WITHOUT ANY WARRANTY; without even the implied warranty of MERCHANTABILITY AND FITNESS FOR A PARTICULAR PURPOSE.

List of aes-src-29-04-09 programs

- aes-src-29-04-09

License terms of conditions of each program which are provided by owner of the copyright to the "aes-src-29-04-09" are as follows.

Copyright (c) 1998-2008, Brian Gladman, Worcester, UK. All rights reserved.

LICENSE TERMS

The redistribution and use of this software (with or without changes) is allowed without the payment of fees or royalties provided that:

1. source code distributions include the above copyright notice, this list of conditions and the following disclaimer;

2. binary distributions include the above copyright notice, this list of conditions and the following disclaimer in their documentation;.

3. the name of the copyright holder is not used to endorse products built using this software without specific written permission.

DISCLAIMER

This software is provided 'as is' with no explicit or implied warranties in respect of its properties, including, but not limited to, correctness and/or fitness for purpose.

newlib

This projector product includes the open source software program "newlib" which applies the terms and conditions provided by owner of the copyright to the "newlib".

The "newlib" are WITHOUT ANY WARRANTY; without even the implied warranty of MERCHANTABILITY AND FITNESS FOR A PARTICULAR PURPOSE.

List of newlib programs

- newlib 1.17.0

License terms of conditions of each program which are provided by owner of the copyright to the "newlib" are as follows.

The newlib subdirectory is a collection of software from several sources.

Each file may have its own copyright/license that is embedded in the source file. Unless otherwise noted in the body of the source file(s), the following copyright notices will apply to the contents of the newlib subdirectory:

(1) Red Hat Incorporated

Copyright (c) 1994-2007 Red Hat, Inc. All rights reserved.

This copyrighted material is made available to anyone wishing to use, modify, copy, or redistribute it subject to the terms and conditions of the BSD License. This program is distributed in the hope that it will be useful, but WITHOUT ANY WARRANTY expressed or implied, including the implied warranties of MERCHANTABILITY or FITNESS FOR A PARTICULAR PURPOSE. A copy of this license is available at http://www.opensource.org/licenses. Any Red Hat trademarks that are incorporated in the source code or documentation are not subject to the BSD License and may only be used or replicated with the express permission of Red Hat, Inc.

(2) University of California, Berkeley

Copyright (c) 1981-2000 The Regents of the University of California.

All rights reserved.

Redistribution and use in source and binary forms, with or without modification, are permitted provided that the following conditions are met:

* Redistributions of source code must retain the above copyright notice, this list of conditions and the following disclaimer.

* Redistributions in binary form must reproduce the above copyright notice, this list of conditions and the following disclaimer in the documentation and/or other materials provided with the distribution.

* Neither the name of the University nor the names of its contributors may be used to endorse or promote products derived from this software without specific prior written permission.

THIS SOFTWARE IS PROVIDED BY THE COPYRIGHT HOLDERS AND CONTRIBUTORS "AS IS" AND ANY EXPRESS OR IMPLIED WARRANTIES, INCLUDING, BUT NOT LIMITED TO, THE IMPLIED WARRANTIES OF MERCHANTABILITY AND FITNESS FOR A PARTICULAR PURPOSE ARE DISCLAIMED. IN NO EVENT SHALL THE COPYRIGHT OWNER OR CONTRIBUTORS BE LIABLE FOR ANY DIRECT, INDIRECT, INCIDENTAL, SPECIAL, EXEMPLARY, OR CONSEQUENTIAL DAMAGES (INCLUDING, BUT NOT LIMITED TO, PROCUREMENT OF SUBSTITUTE GOODS OR SERVICES; LOSS OF USE, DATA, OR PROFITS; OR BUSINESS INTERRUPTION) HOWEVER CAUSED AND ON ANY THEORY OF LIABILITY, WHETHER IN CONTRACT, STRICT LIABILITY, OR TORT (INCLUDING NEGLIGENCE OR OTHERWISE) ARISING IN ANY WAY OUT OF THE USE OF THIS SOFTWARE, EVEN IF ADVISED OF THE POSSIBILITY OF SUCH DAMAGE.

(3) David M. Gay (AT&T 1991, Lucent 1998)

The author of this software is David M. Gay.

Copyright (c) 1991 by AT&T.

Permission to use, copy, modify, and distribute this software for any purpose without fee is hereby granted, provided that this entire notice is included in all copies of any software which is or includes a copy or modification of this software and in all copies of the supporting documentation for such software.

THIS SOFTWARE IS BEING PROVIDED "AS IS", WITHOUT ANY EXPRESS OR IMPLIED WARRANTY. IN PARTICULAR, NEITHER THE AUTHOR NOR AT&T MAKES ANY REPRESENTATION OR WARRANTY OF ANY KIND CONCERNING THE MERCHANTABILITY OF THIS SOFTWARE OR ITS FITNESS FOR ANY PARTICULAR PURPOSE.

The author of this software is David M. Gay.

Copyright (C) 1998-2001 by Lucent Technologies

All Rights Reserved

Permission to use, copy, modify, and distribute this software and its documentation for any purpose and without fee is hereby granted, provided that the above copyright notice appear in all copies and that both that the copyright notice and this permission notice and warranty disclaimer appear in supporting documentation, and that the name of Lucent or any of its entities not be used in advertising or publicity pertaining to distribution of the software without specific, written prior permission.

LUCENT DISCLAIMS ALL WARRANTIES WITH REGARD TO THIS SOFTWARE, INCLUDING ALL IMPLIED WARRANTIES OF MERCHANTABILITY AND FITNESS. IN NO EVENT SHALL LUCENT OR ANY OF ITS ENTITIES BE LIABLE FOR ANY SPECIAL, INDIRECT OR CONSEQUENTIAL DAMAGES OR ANY DAMAGES WHATSOEVER RESULTING FROM LOSS OF USE, DATA OR PROFITS, WHETHER IN AN ACTION OF CONTRACT, NEGLIGENCE OR OTHER TORTIOUS ACTION, ARISING OUT OF OR IN CONNECTION WITH THE USE OR PERFORMANCE OF THIS SOFTWARE.

(4) Advanced Micro Devices

Copyright 1989, 1990 Advanced Micro Devices, Inc.

This software is the property of Advanced Micro Devices, Inc (AMD) which specifically grants the user the right to modify, use and distribute this software provided this notice is not removed or altered. All other rights are reserved by AMD.

AMD MAKES NO WARRANTY OF ANY KIND, EXPRESS OR IMPLIED, WITH REGARD TO THIS SOFTWARE. IN NO EVENT SHALL AMD BE LIABLE FOR INCIDENTAL OR CONSEQUENTIAL DAMAGES IN CONNECTION WITH OR ARISING FROM THE FURNISHING, PERFORMANCE, OR USE OF THIS SOFTWARE.

So that all may benefit from your experience, please report any problems or suggestions about this software to the 29K Technical Support Center at 800-29-29-AMD (800-292-9263) in the USA, or 0800-89-1131 in the UK, or 0031-11-1129 in Japan, toll free. The direct dial number is 512-462-4118.

Advanced Micro Devices, Inc.

29K Support Products

Mail Stop 573

5900 E. Ben White Blvd.

Austin, TX 78741

800-292-9263

(5) C.W. Sandmann

Copyright (C) 1993 C.W. Sandmann

This file may be freely distributed as long as the author's name remains.

(6) Eric Backus

(C) Copyright 1992 Eric Backus

This software may be used freely so long as this copyright notice is left intact. There is no warrantee on this software.

(7) Sun Microsystems

Copyright (C) 1993 by Sun Microsystems, Inc. All rights reserved.

Developed at SunPro, a Sun Microsystems, Inc. business. Permission to use, copy, modify, and distribute this software is freely granted, provided that this notice is preserved.

(8) Hewlett Packard

(c) Copyright 1986 HEWLETT-PACKARD COMPANY

To anyone who acknowledges that this file is provided "AS IS" without any express or implied warranty: permission to use, copy, modify, and distribute this file for any purpose is hereby granted without fee, provided that the above copyright notice and this notice appears in all copies, and that the name of Hewlett-Packard Company not be used in advertising or publicity pertaining to distribution of the software without specific, written prior permission. Hewlett-Packard Company makes no representations about the suitability of this software for any purpose.

(9) Hans-Peter Nilsson

Copyright (C) 2001 Hans-Peter Nilsson

Permission to use, copy, modify, and distribute this software is freely granted, provided that the above copyright notice, this notice and the following disclaimer are preserved with no changes.

THIS SOFTWARE IS PROVIDED "AS IS" AND WITHOUT ANY EXPRESS OR IMPLIED WARRANTIES, INCLUDING, WITHOUT LIMITATION, THE IMPLIED WARRANTIES OF MERCHANTABILITY AND FITNESS FOR A PARTICULAR PURPOSE.

(11) Christopher G. Demetriou

Copyright (c) 2001 Christopher G. Demetriou

All rights reserved.

Redistribution and use in source and binary forms, with or without modification, are permitted provided that the following conditions are met:

1. Redistributions of source code must retain the above copyright notice, this list of conditions and the following disclaimer.

2. Redistributions in binary form must reproduce the above copyright notice, this list of conditions and the following disclaimer in the documentation and/or other materials provided with the distribution.

3. The name of the author may not be used to endorse or promote products derived from this software without specific prior written permission.

THIS SOFTWARE IS PROVIDED BY THE AUTHOR "AS IS" AND ANY EXPRESS OR IMPLIED WARRANTIES, INCLUDING, BUT NOT LIMITED TO, THE IMPLIED WARRANTIES OF MERCHANTABILITY AND FITNESS FOR A PARTICULAR PURPOSE ARE DISCLAIMED. IN NO EVENT SHALL THE AUTHOR BE LIABLE FOR ANY DIRECT, INDIRECT, INCIDENTAL, SPECIAL, EXEMPLARY, OR CONSEQUENTIAL DAMAGES (INCLUDING, BUT NOT LIMITED TO, PROCUREMENT OF SUBSTITUTE GOODS OR SERVICES; LOSS OF USE, DATA, OR PROFITS; OR BUSINESS INTERRUPTION) HOWEVER CAUSED AND ON ANY THEORY OF LIABILITY, WHETHER IN CONTRACT, STRICT LIABILITY, OR TORT (INCLUDING NEGLIGENCE OR OTHERWISE) ARISING IN ANY WAY OUT OF THE USE OF THIS SOFTWARE, EVEN IF ADVISED OF THE POSSIBILITY OF SUCH DAMAGE.

(12) SuperH, Inc.

Copyright 2002 SuperH, Inc. All rights reserved

This software is the property of SuperH, Inc (SuperH) which specifically grants the user the right to modify, use and distribute this software provided this notice is not removed or altered. All other rights are reserved by SuperH.

SUPERH MAKES NO WARRANTY OF ANY KIND, EXPRESS OR IMPLIED, WITH REGARD TO THIS SOFTWARE. IN NO EVENT SHALL SUPERH BE LIABLE FOR INDIRECT, SPECIAL, INCIDENTAL OR CONSEQUENTIAL DAMAGES IN CONNECTION WITH OR ARISING FROM THE FURNISHING, PERFORMANCE, OR USE OF THIS SOFTWARE.

So that all may benefit from your experience, please report any problems or suggestions about this software to the SuperH Support Center via e-mail at softwaresupport@superh.com.

SuperH, Inc.

405 River Oaks Parkway

San Jose

CA 95134

USA

(13) Royal Institute of Technology

Copyright (c) 1999 Kungliga Tekniska Högskolan (Royal Institute of Technology, Stockholm, Sweden).

All rights reserved.

Redistribution and use in source and binary forms, with or without modification, are permitted provided that the following conditions are met:

1. Redistributions of source code must retain the above copyright notice, this list of conditions and the following disclaimer.

2. Redistributions in binary form must reproduce the above copyright notice, this list of conditions and the following disclaimer in the documentation and/or other materials provided with the distribution.

3. Neither the name of KTH nor the names of its contributors may be used to endorse or promote products derived from this software without specific prior written permission.

THIS SOFTWARE IS PROVIDED BY KTH AND ITS CONTRIBUTORS "AS IS" AND ANY EXPRESS OR IMPLIED WARRANTIES, INCLUDING, BUT NOT LIMITED TO, THE IMPLIED WARRANTIES OF MERCHANTABILITY AND FITNESS FOR A PARTICULAR PURPOSE ARE DISCLAIMED. IN NO EVENT SHALL KTH OR ITS CONTRIBUTORS BE LIABLE FOR ANY DIRECT, INDIRECT, INCIDENTAL, SPECIAL, EXEMPLARY, OR CONSEQUENTIAL DAMAGES (INCLUDING, BUT NOT LIMITED TO, PROCUREMENT OF SUBSTITUTE GOODS OR SERVICES; LOSS OF USE, DATA, OR PROFITS; OR BUSINESS INTERRUPTION) HOWEVER CAUSED AND ON ANY THEORY OF

LIABILITY, WHETHER IN CONTRACT, STRICT LIABILITY, OR TORT (INCLUDING NEGLIGENCE OR OTHERWISE) ARISING IN ANY WAY OUT OF THE USE OF THIS SOFTWARE, EVEN IF ADVISED OF THE POSSIBILITY OF SUCH DAMAGE.

(14) Alexey Zelkin

Copyright (c) 2000, 2001 Alexey Zelkin <phantom@FreeBSD.org>

All rights reserved.

Redistribution and use in source and binary forms, with or without modification, are permitted provided that the following conditions are met:

1. Redistributions of source code must retain the above copyright notice, this list of conditions and the following disclaimer.

2. Redistributions in binary form must reproduce the above copyright notice, this list of conditions and the following disclaimer in the documentation and/or other materials provided with the distribution.

THIS SOFTWARE IS PROVIDED BY THE AUTHOR AND CONTRIBUTORS "AS IS" AND ANY EXPRESS OR IMPLIED WARRANTIES, INCLUDING, BUT NOT LIMITED TO, THE IMPLIED WARRANTIES OF MERCHANTABILITY AND FITNESS FOR A PARTICULAR PURPOSE ARE DISCLAIMED. IN NO EVENT SHALL THE AUTHOR OR CONTRIBUTORS BE LIABLE FOR ANY DIRECT, INDIRECT, INCIDENTAL, SPECIAL, EXEMPLARY, OR CONSEQUENTIAL DAMAGES (INCLUDING, BUT NOT LIMITED TO, PROCUREMENT OF SUBSTITUTE GOODS OR SERVICES; LOSS OF USE, DATA, OR PROFITS; OR BUSINESS INTERRUPTION) HOWEVER CAUSED AND ON ANY THEORY OF LIABILITY, WHETHER IN CONTRACT, STRICT LIABILITY, OR TORT (INCLUDING NEGLIGENCE OR OTHERWISE) ARISING IN ANY WAY OUT OF THE USE OF THIS SOFTWARE, EVEN IF ADVISED OF THE POSSIBILITY OF SUCH DAMAGE.

(15) Andrey A. Chernov

Copyright (C) 1997 by Andrey A. Chernov, Moscow, Russia.

All rights reserved.

Redistribution and use in source and binary forms, with or without modification, are permitted provided that the following conditions are met:

1. Redistributions of source code must retain the above copyright notice, this list of conditions and the following disclaimer.

2. Redistributions in binary form must reproduce the above copyright notice, this list of conditions and the following disclaimer in the documentation and/or other materials provided with the distribution.

THIS SOFTWARE IS PROVIDED BY THE AUTHOR "AS IS" AND ANY EXPRESS OR IMPLIED WARRANTIES, INCLUDING, BUT NOT LIMITED TO, THE IMPLIED WARRANTIES OF MERCHANTABILITY AND FITNESS FOR A PARTICULAR PURPOSE ARE DISCLAIMED. IN NO

EVENT SHALL THE REGENTS OR CONTRIBUTORS BE LIABLE FOR ANY DIRECT, INDIRECT, INCIDENTAL, SPECIAL, EXEMPLARY, OR CONSEQUENTIAL DAMAGES (INCLUDING, BUT NOT LIMITED TO, PROCUREMENT OF SUBSTITUTE GOODS OR SERVICES; LOSS OF USE, DATA, OR PROFITS; OR BUSINESS INTERRUPTION) HOWEVER CAUSED AND ON ANY THEORY OF LIABILITY, WHETHER IN CONTRACT, STRICT LIABILITY, OR TORT (INCLUDING NEGLIGENCE OR OTHERWISE) ARISING IN ANY WAY OUT OF THE USE OF THIS SOFTWARE, EVEN IF ADVISED OF THE POSSIBILITY OF SUCH DAMAGE.

(16) FreeBSD

Copyright (c) 1997-2002 FreeBSD Project.

All rights reserved.

Redistribution and use in source and binary forms, with or without modification, are permitted provided that the following conditions are met:

1. Redistributions of source code must retain the above copyright notice, this list of conditions and the following disclaimer.

2. Redistributions in binary form must reproduce the above copyright notice, this list of conditions and the following disclaimer in the documentation and/or other materials provided with the distribution.

THIS SOFTWARE IS PROVIDED BY THE AUTHOR AND CONTRIBUTORS "AS IS" AND ANY EXPRESS OR IMPLIED WARRANTIES, INCLUDING, BUT NOT LIMITED TO, THE IMPLIED WARRANTIES OF MERCHANTABILITY AND FITNESS FOR A PARTICULAR PURPOSE ARE DISCLAIMED. IN NO EVENT SHALL THE AUTHOR OR CONTRIBUTORS BE LIABLE FOR ANY DIRECT, INDIRECT, INCIDENTAL, SPECIAL, EXEMPLARY, OR CONSEQUENTIAL DAMAGES (INCLUDING, BUT NOT LIMITED TO, PROCUREMENT OF SUBSTITUTE GOODS OR SERVICES; LOSS OF USE, DATA, OR PROFITS; OR BUSINESS INTERRUPTION) HOWEVER CAUSED AND ON ANY THEORY OF LIABILITY, WHETHER IN CONTRACT, STRICT LIABILITY, OR TORT (INCLUDING NEGLIGENCE OR OTHERWISE) ARISING IN ANY WAY OUT OF THE USE OF THIS SOFTWARE, EVEN IF ADVISED OF THE POSSIBILITY OF SUCH DAMAGE.

(17) S. L. Moshier

Author: S. L. Moshier.

Copyright (c) 1984,2000 S.L. Moshier

Permission to use, copy, modify, and distribute this software for any purpose without fee is hereby granted, provided that this entire notice is included in all copies of any software which is or includes a copy or modification of this software and in all copies of the supporting documentation for such software.

THIS SOFTWARE IS BEING PROVIDED "AS IS", WITHOUT ANY EXPRESS OR IMPLIED WARRANTY. IN PARTICULAR, THE AUTHOR MAKES NO REPRESENTATION OR WARRANTY OF

ANY KIND CONCERNING THE MERCHANTABILITY OF THIS SOFTWARE OR ITS FITNESS FOR ANY PARTICULAR PURPOSE.

(18) Citrus Project

Copyright (c)1999 Citrus Project,

All rights reserved.

Redistribution and use in source and binary forms, with or without modification, are permitted provided that the following conditions are met:

1. Redistributions of source code must retain the above copyright notice, this list of conditions and the following disclaimer.

2. Redistributions in binary form must reproduce the above copyright notice, this list of conditions and the following disclaimer in the documentation and/or other materials provided with the distribution.

THIS SOFTWARE IS PROVIDED BY THE AUTHOR AND CONTRIBUTORS "AS IS" AND ANY EXPRESS OR IMPLIED WARRANTIES, INCLUDING, BUT NOT LIMITED TO, THE IMPLIED WARRANTIES OF MERCHANTABILITY AND FITNESS FOR A PARTICULAR PURPOSE ARE DISCLAIMED. IN NO EVENT SHALL THE AUTHOR OR CONTRIBUTORS BE LIABLE FOR ANY DIRECT, INDIRECT, INCIDENTAL, SPECIAL, EXEMPLARY, OR CONSEQUENTIAL DAMAGES (INCLUDING, BUT NOT LIMITED TO, PROCUREMENT OF SUBSTITUTE GOODS OR SERVICES; LOSS OF USE, DATA, OR PROFITS; OR BUSINESS INTERRUPTION) HOWEVER CAUSED AND ON ANY THEORY OF LIABILITY, WHETHER IN CONTRACT, STRICT LIABILITY, OR TORT (INCLUDING NEGLIGENCE OR OTHERWISE) ARISING IN ANY WAY OUT OF THE USE OF THIS SOFTWARE, EVEN IF ADVISED OF THE POSSIBILITY OF SUCH DAMAGE.

(19) Todd C. Miller

Copyright (c) 1998 Todd C. Miller <Todd.Miller@courtesan.com>

All rights reserved.

Redistribution and use in source and binary forms, with or without modification, are permitted provided that the following conditions are met:

1. Redistributions of source code must retain the above copyright notice, this list of conditions and the following disclaimer.

2. Redistributions in binary form must reproduce the above copyright notice, this list of conditions and the following disclaimer in the documentation and/or other materials provided with the distribution.

3. The name of the author may not be used to endorse or promote products derived from this software without specific prior written permission.

THIS SOFTWARE IS PROVIDED "AS IS" AND ANY EXPRESS OR IMPLIED WARRANTIES, INCLUDING, BUT NOT LIMITED TO, THE IMPLIED WARRANTIES OF MERCHANTABILITY AND

FITNESS FOR A PARTICULAR PURPOSE ARE DISCLAIMED. IN NO EVENT SHALL THE AUTHOR BE LIABLE FOR ANY DIRECT, INDIRECT, INCIDENTAL, SPECIAL, EXEMPLARY, OR CONSEQUENTIAL DAMAGES (INCLUDING, BUT NOT LIMITED TO, PROCUREMENT OF SUBSTITUTE GOODS OR SERVICES; LOSS OF USE, DATA, OR PROFITS; OR BUSINESS INTERRUPTION) HOWEVER CAUSED AND ON ANY THEORY OF LIABILITY, WHETHER IN CONTRACT, STRICT LIABILITY, OR TORT (INCLUDING NEGLIGENCE OR OTHERWISE) ARISING IN ANY WAY OUT OF THE USE OF THIS SOFTWARE, EVEN IF ADVISED OF THE POSSIBILITY OF SUCH DAMAGE.

(20) DJ Delorie (i386)

Copyright (C) 1991 DJ Delorie

All rights reserved.

Redistribution and use in source and binary forms is permitted provided that the above copyright notice and following paragraph are duplicated in all such forms.

This file is distributed WITHOUT ANY WARRANTY; without even the implied warranty of MERCHANTABILITY or FITNESS FOR A PARTICULAR PURPOSE.

(23) Intel (i960)

Copyright (c) 1993 Intel Corporation

Intel hereby grants you permission to copy, modify, and distribute this software and its documentation. Intel grants this permission provided that the above copyright notice appears in all copies and that both the copyright notice and this permission notice appear in supporting documentation. In addition, Intel grants this permission provided that you prominently mark as "not part of the original" any modifications made to this software or documentation, and that the name of Intel Corporation not be used in advertising or publicity pertaining to distribution of the software or the documentation without specific, written prior permission.

Intel Corporation provides this AS IS, WITHOUT ANY WARRANTY, EXPRESS OR IMPLIED, INCLUDING, WITHOUT LIMITATION, ANY WARRANTY OF MERCHANTABILITY OR FITNESS FOR A PARTICULAR PURPOSE. Intel makes no guarantee or representations regarding the use of, or the results of the use of, the software and documentation in terms of correctness, accuracy, reliability, currentness, or otherwise; and you rely on the software, documentation and results solely at your own risk.

IN NO EVENT SHALL INTEL BE LIABLE FOR ANY LOSS OF USE, LOSS OF BUSINESS, LOSS OF PROFITS, INDIRECT, INCIDENTAL, SPECIAL OR CONSEQUENTIAL DAMAGES OF ANY KIND. IN NO EVENT SHALL INTEL'S TOTAL LIABILITY EXCEED THE SUM PAID TO INTEL FOR THE PRODUCT LICENSED HEREUNDER.

(26) Mike Barcroft

Copyright (c) 2001 Mike Barcroft <mike@FreeBSD.org>

All rights reserved.

Redistribution and use in source and binary forms, with or without modification, are permitted provided that the following conditions are met:

1. Redistributions of source code must retain the above copyright notice, this list of conditions and the following disclaimer.

2. Redistributions in binary form must reproduce the above copyright notice, this list of conditions and the following disclaimer in the documentation and/or other materials provided with the distribution.

THIS SOFTWARE IS PROVIDED BY THE AUTHOR AND CONTRIBUTORS "AS IS" AND ANY EXPRESS OR IMPLIED WARRANTIES, INCLUDING, BUT NOT LIMITED TO, THE IMPLIED WARRANTIES OF MERCHANTABILITY AND FITNESS FOR A PARTICULAR PURPOSE ARE DISCLAIMED. IN NO EVENT SHALL THE AUTHOR OR CONTRIBUTORS BE LIABLE FOR ANY DIRECT, INDIRECT, INCIDENTAL, SPECIAL, EXEMPLARY, OR CONSEQUENTIAL DAMAGES (INCLUDING, BUT NOT LIMITED TO, PROCUREMENT OF SUBSTITUTE GOODS OR SERVICES; LOSS OF USE, DATA, OR PROFITS; OR BUSINESS INTERRUPTION) HOWEVER CAUSED AND ON ANY THEORY OF LIABILITY, WHETHER IN CONTRACT, STRICT LIABILITY, OR TORT (INCLUDING NEGLIGENCE OR OTHERWISE) ARISING IN ANY WAY OUT OF THE USE OF THIS SOFTWARE, EVEN IF ADVISED OF THE POSSIBILITY OF SUCH DAMAGE.

(27) Konstantin Chuguev (--enable-newlib-iconv)

Copyright (c) 1999, 2000

Konstantin Chuguev. All rights reserved.

Redistribution and use in source and binary forms, with or without modification, are permitted provided that the following conditions are met:

1. Redistributions of source code must retain the above copyright notice, this list of conditions and the following disclaimer.

2. Redistributions in binary form must reproduce the above copyright notice, this list of conditions and the following disclaimer in the documentation and/or other materials provided with the distribution.

THIS SOFTWARE IS PROVIDED BY THE AUTHOR AND CONTRIBUTORS "AS IS" AND ANY EXPRESS OR IMPLIED WARRANTIES, INCLUDING, BUT NOT LIMITED TO, THE IMPLIED WARRANTIES OF MERCHANTABILITY AND FITNESS FOR A PARTICULAR PURPOSE ARE DISCLAIMED. IN NO EVENT SHALL THE AUTHOR OR CONTRIBUTORS BE LIABLE FOR ANY DIRECT, INDIRECT, INCIDENTAL, SPECIAL, EXEMPLARY, OR CONSEQUENTIAL DAMAGES (INCLUDING, BUT NOT LIMITED TO, PROCUREMENT OF SUBSTITUTE GOODS OR SERVICES; LOSS OF USE, DATA, OR PROFITS; OR BUSINESS INTERRUPTION) HOWEVER CAUSED AND ON ANY THEORY OF LIABILITY, WHETHER IN CONTRACT, STRICT LIABILITY, OR TORT (INCLUDING

NEGLIGENCE OR OTHERWISE) ARISING IN ANY WAY OUT OF THE USE OF THIS SOFTWARE, EVEN IF ADVISED OF THE POSSIBILITY OF SUCH DAMAGE.

iconv (Charset Conversion Library) v2.0

(28) Artem Bityuckiy (--enable-newlib-iconv)

Copyright (c) 2003, Artem B. Bityuckiy, SoftMine Corporation. Rights transferred to Franklin Electronic Publishers.

Redistribution and use in source and binary forms, with or without modification, are permitted provided that the following conditions are met:

1. Redistributions of source code must retain the above copyright notice, this list of conditions and the following disclaimer.

2. Redistributions in binary form must reproduce the above copyright notice, this list of conditions and the following disclaimer in the documentation and/or other materials provided with the distribution.

THIS SOFTWARE IS PROVIDED BY THE AUTHOR AND CONTRIBUTORS "AS IS" AND ANY EXPRESS OR IMPLIED WARRANTIES, INCLUDING, BUT NOT LIMITED TO, THE IMPLIED WARRANTIES OF MERCHANTABILITY AND FITNESS FOR A PARTICULAR PURPOSE ARE DISCLAIMED. IN NO EVENT SHALL THE AUTHOR OR CONTRIBUTORS BE LIABLE FOR ANY DIRECT, INDIRECT, INCIDENTAL, SPECIAL, EXEMPLARY, OR CONSEQUENTIAL DAMAGES (INCLUDING, BUT NOT LIMITED TO, PROCUREMENT OF SUBSTITUTE GOODS OR SERVICES; LOSS OF USE, DATA, OR PROFITS; OR BUSINESS INTERRUPTION) HOWEVER CAUSED AND ON ANY THEORY OF LIABILITY, WHETHER IN CONTRACT, STRICT LIABILITY, OR TORT (INCLUDING NEGLIGENCE OR OTHERWISE) ARISING IN ANY WAY OUT OF THE USE OF THIS SOFTWARE, EVEN IF ADVISED OF THE POSSIBILITY OF SUCH DAMAGE.

(30) - Alex Tatmanjants (targets using libc/posix)

Copyright (c) 1995 Alex Tatmanjants <alex@elvisti.kiev.ua>

at Electronni Visti IA, Kiev, Ukraine.

All rights reserved.

Redistribution and use in source and binary forms, with or without modification, are permitted provided that the following conditions are met:

1. Redistributions of source code must retain the above copyright notice, this list of conditions and the following disclaimer.

2. Redistributions in binary form must reproduce the above copyright notice, this list of conditions and the following disclaimer in the documentation and/or other materials provided with the distribution.

THIS SOFTWARE IS PROVIDED BY THE AUTHOR "AS IS" AND ANY EXPRESS OR IMPLIED WARRANTIES, INCLUDING, BUT NOT LIMITED TO, THE IMPLIED WARRANTIES OF

MERCHANTABILITY AND FITNESS FOR A PARTICULAR PURPOSE ARE DISCLAIMED. IN NO EVENT SHALL THE AUTHOR BE LIABLE FOR ANY DIRECT, INDIRECT, INCIDENTAL, SPECIAL, EXEMPLARY, OR CONSEQUENTIAL DAMAGES (INCLUDING, BUT NOT LIMITED TO, PROCUREMENT OF SUBSTITUTE GOODS OR SERVICES; LOSS OF USE, DATA, OR PROFITS; OR BUSINESS INTERRUPTION) HOWEVER CAUSED AND ON ANY THEORY OF LIABILITY, WHETHER IN CONTRACT, STRICT LIABILITY, OR TORT (INCLUDING NEGLIGENCE OR OTHERWISE) ARISING IN ANY WAY OUT OF THE USE OF THIS SOFTWARE, EVEN IF ADVISED OF THE POSSIBILITY OF SUCH DAMAGE.

(31) - M. Warner Losh (targets using libc/posix)

Copyright (c) 1998, M. Warner Losh <imp@freebsd.org>

All rights reserved.

Redistribution and use in source and binary forms, with or without modification, are permitted provided that the following conditions are met:

1. Redistributions of source code must retain the above copyright notice, this list of conditions and the following disclaimer.

2. Redistributions in binary form must reproduce the above copyright notice, this list of conditions and the following disclaimer in the documentation and/or other materials provided with the distribution.

THIS SOFTWARE IS PROVIDED BY THE AUTHOR AND CONTRIBUTORS "AS IS" AND ANY EXPRESS OR IMPLIED WARRANTIES, INCLUDING, BUT NOT LIMITED TO, THE IMPLIED WARRANTIES OF MERCHANTABILITY AND FITNESS FOR A PARTICULAR PURPOSE ARE DISCLAIMED. IN NO EVENT SHALL THE AUTHOR OR CONTRIBUTORS BE LIABLE FOR ANY DIRECT, INDIRECT, INCIDENTAL, SPECIAL, EXEMPLARY, OR CONSEQUENTIAL DAMAGES (INCLUDING, BUT NOT LIMITED TO, PROCUREMENT OF SUBSTITUTE GOODS OR SERVICES; LOSS OF USE, DATA, OR PROFITS; OR BUSINESS INTERRUPTION) HOWEVER CAUSED AND ON ANY THEORY OF LIABILITY, WHETHER IN CONTRACT, STRICT LIABILITY, OR TORT (INCLUDING NEGLIGENCE OR OTHERWISE) ARISING IN ANY WAY OUT OF THE USE OF THIS SOFTWARE, EVEN IF ADVISED OF THE POSSIBILITY OF SUCH DAMAGE.

(32) - Andrey A. Chernov (targets using libc/posix)

Copyright (C) 1996 by Andrey A. Chernov, Moscow, Russia.

All rights reserved.

Redistribution and use in source and binary forms, with or without modification, are permitted provided that the following conditions are met:

1. Redistributions of source code must retain the above copyright notice, this list of conditions and the following disclaimer.

2. Redistributions in binary form must reproduce the above copyright notice, this list of conditions and the following disclaimer in the documentation and/or other materials provided with the distribution.

THIS SOFTWARE IS PROVIDED BY THE AUTHOR "AS IS" AND ANY EXPRESS OR IMPLIED WARRANTIES, INCLUDING, BUT NOT LIMITED TO, THE IMPLIED WARRANTIES OF MERCHANTABILITY AND FITNESS FOR A PARTICULAR PURPOSE ARE DISCLAIMED. IN NO EVENT SHALL THE REGENTS OR CONTRIBUTORS BE LIABLE FOR ANY DIRECT, INDIRECT, INCIDENTAL, SPECIAL, EXEMPLARY, OR CONSEQUENTIAL DAMAGES (INCLUDING, BUT NOT LIMITED TO, PROCUREMENT OF SUBSTITUTE GOODS OR SERVICES; LOSS OF USE, DATA, OR PROFITS; OR BUSINESS INTERRUPTION) HOWEVER CAUSED AND ON ANY THEORY OF LIABILITY, WHETHER IN CONTRACT, STRICT LIABILITY, OR TORT (INCLUDING NEGLIGENCE OR OTHERWISE) ARISING IN ANY WAY OUT OF THE USE OF THIS SOFTWARE, EVEN IF ADVISED OF THE POSSIBILITY OF SUCH DAMAGE.

(33) - Daniel Eischen (targets using libc/posix)

Copyright (c) 2001 Daniel Eischen <deischen@FreeBSD.org>.

All rights reserved.

Redistribution and use in source and binary forms, with or without modification, are permitted provided that the following conditions are met:

1. Redistributions of source code must retain the above copyright notice, this list of conditions and the following disclaimer.

2. Redistributions in binary form must reproduce the above copyright notice, this list of conditions and the following disclaimer in the documentation and/or other materials provided with the distribution.

THIS SOFTWARE IS PROVIDED BY THE AUTHOR AND CONTRIBUTORS "AS IS" AND ANY EXPRESS OR IMPLIED WARRANTIES, INCLUDING, BUT NOT LIMITED TO, THE IMPLIED WARRANTIES OF MERCHANTABILITY AND FITNESS FOR A PARTICULAR PURPOSE ARE DISCLAIMED. IN NO EVENT SHALL THE REGENTS OR CONTRIBUTORS BE LIABLE FOR ANY DIRECT, INDIRECT, INCIDENTAL, SPECIAL, EXEMPLARY, OR CONSEQUENTIAL DAMAGES (INCLUDING, BUT NOT LIMITED TO, PROCUREMENT OF SUBSTITUTE GOODS OR SERVICES; LOSS OF USE, DATA, OR PROFITS; OR BUSINESS INTERRUPTION) HOWEVER CAUSED AND ON ANY THEORY OF LIABILITY, WHETHER IN CONTRACT, STRICT LIABILITY, OR TORT (INCLUDING NEGLIGENCE OR OTHERWISE) ARISING IN ANY WAY OUT OF THE USE OF THIS SOFTWARE, EVEN IF ADVISED OF THE POSSIBILITY OF SUCH DAMAGE.

(35) - ARM Ltd (arm and thumb variant targets only)

Copyright (c) 2009 ARM Ltd

All rights reserved.

Redistribution and use in source and binary forms, with or without modification, are permitted provided that the following conditions are met:

1. Redistributions of source code must retain the above copyright notice, this list of conditions and the following disclaimer.

2. Redistributions in binary form must reproduce the above copyright notice, this list of conditions and the following disclaimer in the documentation and/or other materials provided with the distribution.

3. The name of the company may not be used to endorse or promote products derived from this software without specific prior written permission.

THIS SOFTWARE IS PROVIDED BY ARM LTD "AS IS" AND ANY EXPRESS OR IMPLIED WARRANTIES, INCLUDING, BUT NOT LIMITED TO, THE IMPLIED WARRANTIES OF MERCHANTABILITY AND FITNESS FOR A PARTICULAR PURPOSE ARE DISCLAIMED. IN NO EVENT SHALL ARM LTD BE LIABLE FOR ANY DIRECT, INDIRECT, INCIDENTAL, SPECIAL, EXEMPLARY, OR CONSEQUENTIAL DAMAGES (INCLUDING, BUT NOT LIMITED TO, PROCUREMENT OF SUBSTITUTE GOODS OR SERVICES; LOSS OF USE, DATA, OR PROFITS; OR BUSINESS INTERRUPTION) HOWEVER CAUSED AND ON ANY THEORY OF LIABILITY, WHETHER IN CONTRACT, STRICT LIABILITY, OR TORT (INCLUDING NEGLIGENCE OR OTHERWISE) ARISING IN ANY WAY OUT OF THE USE OF THIS SOFTWARE, EVEN IF ADVISED OF THE POSSIBILITY OF SUCH DAMAGE.

(36) - CodeSourcery, Inc.

Copyright (c) 2009 CodeSourcery, Inc.

All rights reserved.

Redistribution and use in source and binary forms, with or without modification, are permitted provided that the following conditions are met:

* Redistributions of source code must retain the above copyright notice, this list of conditions and the following disclaimer.

* Redistributions in binary form must reproduce the above copyright notice, this list of conditions and the following disclaimer in the documentation and/or other materials provided with the distribution.

* Neither the name of CodeSourcery nor the names of its contributors may be used to endorse or promote products derived from this software without specific prior written permission.

THIS SOFTWARE IS PROVIDED BY CODESOURCERY, INC. "AS IS" AND ANY EXPRESS OR IMPLIED WARRANTIES, INCLUDING, BUT NOT LIMITED TO, THE IMPLIED WARRANTIES OF MERCHANTABILITY AND FITNESS FOR A PARTICULAR PURPOSE ARE DISCLAIMED. IN NO EVENT SHALL CODESOURCERY BE LIABLE FOR ANY DIRECT, INDIRECT, INCIDENTAL, SPECIAL, EXEMPLARY, OR CONSEQUENTIAL DAMAGES (INCLUDING, BUT NOT LIMITED TO, PROCUREMENT OF SUBSTITUTE GOODS OR SERVICES; LOSS OF USE, DATA, OR PROFITS;

OR BUSINESS INTERRUPTION) HOWEVER CAUSED AND ON ANY THEORY OF LIABILITY, WHETHER IN CONTRACT, STRICT LIABILITY, OR TORT (INCLUDING NEGLIGENCE OR OTHERWISE) ARISING IN ANY WAY OUT OF THE USE OF THIS SOFTWARE, EVEN IF ADVISED OF THE POSSIBILITY OF SUCH DAMAGE.

(37) MIPS Technologies, Inc

/*

* Copyright (c) 2009 MIPS Technologies, Inc.

* All rights reserved.

* Redistribution and use in source and binary forms, with or without modification, are permitted provided that the following conditions are met:

* * Redistributions of source code must retain the above copyright notice, this list of conditions and the following disclaimer.

* * Redistributions in binary form must reproduce the above copyright notice, this list of conditions and the following disclaimer in the documentation and/or other materials provided with the distribution.

* * Neither the name of MIPS Technologies Inc. nor the names of its contributors may be used to endorse or promote products derived from this software without specific prior written permission.

* THIS SOFTWARE IS PROVIDED BY THE COPYRIGHT HOLDERS AND CONTRIBUTORS "AS IS" AND ANY EXPRESS OR IMPLIED WARRANTIES, INCLUDING, BUT NOT LIMITED TO, THE IMPLIED WARRANTIES OF MERCHANTABILITY AND FITNESS FOR A PARTICULAR PURPOSE ARE DISCLAIMED. IN NO EVENT SHALL THE COPYRIGHT OWNER OR CONTRIBUTORS BE LIABLE FOR ANY DIRECT, INDIRECT, INCIDENTAL, SPECIAL, EXEMPLARY, OR CONSEQUENTIAL DAMAGES (INCLUDING, BUT NOT LIMITED TO, PROCUREMENT OF SUBSTITUTE GOODS OR SERVICES; LOSS OF USE, DATA, OR PROFITS; OR BUSINESS INTERRUPTION) HOWEVER CAUSED AND ON ANY THEORY OF LIABILITY, WHETHER IN CONTRACT, STRICT LIABILITY, OR TORT (INCLUDING NEGLIGENCE OR OTHERWISE) ARISING IN ANY WAY OUT OF THE USE OF THIS SOFTWARE, EVEN IF ADVISED OF THE POSSIBILITY OF SUCH DAMAGE.

*/

MIT License

This projector product includes the open source software program which applies the terms and conditions provided by owner of the copyright to the "MIT License".

The "MIT License" are WITHOUT ANY WARRANTY; without even the implied warranty of MERCHANTABILITY AND FITNESS FOR A PARTICULAR PURPOSE.

List of MIT License programs

- jquery-1.7.2.min.js
- jquery-ui-1.8.20
- jquery.ui.touch-punch.js
- jquery.upload-1.0.2.min.js
- jquery-1.11.3.min.js
- jquery-ui-1.11.4
- expat-2.0.1
- jansson-2.4

License terms of conditions of each program which are provided by owner of the copyright to the "MIT License" are as follows.

Copyright © 2012 jQuery Foundation and other contributors, http://jquery.com/

Copyright © 2001, 2002, 2003, 2004, 2005, 2006 Expat maintainers.

Copyright © 2009-2012 Petri Lehtinen <petri@digip.org>

Permission is hereby granted, free of charge, to any person obtaining a copy of this software and associated documentation files (the "Software"), to deal in the Software without restriction, including without limitation the rights to use, copy, modify, merge, publish, distribute, sublicense, and/or sell copies of the Software, and to permit persons to whom the Software is furnished to do so, subject to the following conditions:

The above copyright notice and this permission notice shall be included in all copies or substantial portions of the Software.

THE SOFTWARE IS PROVIDED "AS IS", WITHOUT WARRANTY OF ANY KIND, EXPRESS OR IMPLIED, INCLUDING BUT NOT LIMITED TO THE WARRANTIES OF MERCHANTABILITY, FITNESS FOR A PARTICULAR PURPOSE AND NONINFRINGEMENT. IN NO EVENT SHALL THE AUTHORS OR COPYRIGHT HOLDERS BE LIABLE FOR ANY CLAIM, DAMAGES OR OTHER LIABILITY, WHETHER IN AN ACTION OF CONTRACT, TORT OR OTHERWISE, ARISING FROM, OUT OF OR IN CONNECTION WITH THE SOFTWARE OR THE USE OR OTHER DEALINGS IN THE SOFTWARE.

TOPPERS/JSP

This projector product includes the open source software program "TOPPERS/JSP" which applies the terms and conditions provided by owner of the copyright to the "TOPPERS/JSP".

The "TOPPERS/JSP" are WITHOUT ANY WARRANTY; without even the implied warranty of MERCHANTABILITY AND FITNESS FOR A PARTICULAR PURPOSE.

List of TOPPERS/JSP programs

- jsp-1.4.3

License terms of conditions of each program which are provided by owner of the copyright to the "TOPPERS/JSP" are as follows.

TOPPERS/JSP Kernel

Toyohashi Open Platform for Embedded Real-Time Systems/Just Standard Profile Kernel

Copyright (C) 2000-2003 by Embedded and Real-Time Systems Laboratory Toyohashi Univ. of Technology, JAPAN

Copyright (C) 2004 by Embedded and Real-Time Systems Laboratory Graduate School of Information Science, Nagoya Univ., JAPAN.

The above copyright holder, limited to cases in which one satisfies conditions (1) ~ (4) below, or the conditions described in Version 2 of the GNU Public License officially announced by the Free Software Foundation, consents to the use, reproduction, alteration, and redistribution (hereafter called utilization) of this software (this software includes alterations, likewise below) without compensation.

(1) When this software is utilized in the form of source code, the above copyright declaration, these conditions of utilization, and the following stipulation of no guarantee shall be included in unchanged form inside the source code.

(2) When this software is redistributed in a form in which it can be used in the development of other software, library form, etc., the above copyright display, these terms of utilization, and the following stipulation of no guarantee shall be inserted in documentation accompanying redistribution (user's manual, etc.).

(3) When this software is redistributed in a form in which it cannot be used in the development of other software, embedded in devices, etc., one of the following conditions shall be satisfied.

(a) The above copyright display, these terms of utilization, and the following stipulation of no guarantee shall be inserted in documentation accompanying redistribution (user's manual, etc.).

(b) The TOPPERS Project shall be notified owing to a method in which the form of distribution is decided otherwise.

(4) The above copyright holder and the TOPPERS Project shall be exempt from responsibility for whatever damages occur either directly or indirectly through the utilization of this software.

This software is something that is provided with no guarantee. The above copyright holder and the TOPPERS Project make no guarantee whatsoever in regard to this software, including the possibility of its application. In addition, the above copyright holder and the TOPPERS Project shall also not bear responsibility for whatever damages occur either directly or indirectly through the utilization of this software.

Note: The TOPPERS License has been revised several times; what is shown above is the latest version that is to be applied to software made public hereafter.

TINET

This projector product includes the open source software program "TINET" which applies the terms and conditions provided by owner of the copyright to the "TINET".

The "TINET" are WITHOUT ANY WARRANTY; without even the implied warranty of MERCHANTABILITY AND FITNESS FOR A PARTICULAR PURPOSE.

List of TINET programs

- tinet-1.4.4

License terms of conditions of each program which are provided by owner of the copyright to the "TINET" are as follows.

(1) FreeBSD

Copyright (c) 1980, 1986, 1993

The Regents of the University of California. All rights reserved.

Redistribution and use in source and binary forms, with or without modification, are permitted provided that the following conditions are met:

1. Redistributions of source code must retain the above copyright notice, this list of conditions and the following disclaimer.

2. Redistributions in binary form must reproduce the above copyright notice, this list of conditions and the following disclaimer in the documentation and/or other materials provided with the distribution.

3. All advertising materials mentioning features or use of this software must display the following acknowledgement:

This product includes software developed by the University of California, Berkeley and its contributors.

4. Neither the name of the University nor the names of its contributors may be used to endorse or promote products derived from this software without specific prior written permission.

THIS SOFTWARE IS PROVIDED BY THE REGENTS AND CONTRIBUTORS "AS IS" AND ANY EXPRESS OR IMPLIED WARRANTIES, INCLUDING, BUT NOT LIMITED TO, THE IMPLIED WARRANTIES OF MERCHANTABILITY AND FITNESS FOR A PARTICULAR PURPOSE ARE DISCLAIMED. IN NO EVENT SHALL THE REGENTS OR CONTRIBUTORS BE LIABLE FOR ANY DIRECT, INDIRECT, INCIDENTAL, SPECIAL, EXEMPLARY, OR CONSEQUENTIAL DAMAGES (INCLUDING, BUT NOT LIMITED TO, PROCUREMENT OF SUBSTITUTE GOODS OR SERVICES; LOSS OF USE, DATA, OR PROFITS; OR BUSINESS INTERRUPTION) HOWEVER CAUSED AND ON ANY THEORY OF LIABILITY, WHETHER IN CONTRACT, STRICT LIABILITY, OR TORT (INCLUDING

NEGLIGENCE OR OTHERWISE) ARISING IN ANY WAY OUT OF THE USE OF THIS SOFTWARE, EVEN IF ADVISED OF THE POSSIBILITY OF SUCH DAMAGE.

(6) TINET and TOPPERS

TINET (TCP/IP Protocol Stack)

Copyright (C) 2001-2006 by Dep. of Computer Science and Engineering Tomakomai National College of Technology, JAPAN

The above copyright holder, limited to cases in which one satisfies conditions (1) ~ (4) below, or the conditions described in Version 2 of the GNU Public License officially announced by the Free Software Foundation, consents to the use, reproduction, alteration, and redistribution (hereafter called utilization) of this software (this software includes alterations, likewise below) without compensation.

(1) When this software is utilized in the form of source code, the above copyright declaration, these conditions of utilization, and the following stipulation of no guarantee shall be included in unchanged form inside the source code.

(2) When this software is redistributed in a form in which it can be used in the development of other software, library form, etc., the above copyright display, these terms of utilization, and the following stipulation of no guarantee shall be inserted in documentation accompanying redistribution (user's manual, etc.).

(3) When this software is redistributed in a form in which it cannot be used in the development of other software, embedded in devices, etc., following conditions shall be satisfied.

(a) The above copyright display, these terms of utilization, and the following stipulation of no guarantee shall be inserted in documentation accompanying redistribution (user's manual, etc.).

(4) The above copyright holder and the TOPPERS Project shall be exempt from responsibility for whatever damages occur either directly or indirectly through the utilization of this software.

This software is something that is provided with no guarantee. The above copyright holder and the TOPPERS Project make no guarantee whatsoever in regard to this software, including the possibility of its application. In addition, the above copyright holder and the TOPPERS Project shall also not bear responsibility for whatever damages occur either directly or indirectly through the utilization of this software.

WPA Supplicant

This projector product includes the open source software program which applies the terms and conditions provided by owner of the copyright to the "WPA Supplicant".

The "WPA Supplicant" are WITHOUT ANY WARRANTY; without even the implied warranty of MERCHANTABILITY AND FITNESS FOR A PARTICULAR PURPOSE.

List of WPA Supplicant programs

- wpa_supplicant-2.3

License terms of conditions of each program which are provided by owner of the copyright to the "WPA Supplicant" are as follows.

Copyright (c) 2003-2014, Jouni Malinen <j@w1.fi> and contributors

All Rights Reserved.

This program is licensed under the BSD license (the one with advertisement clause removed).

If you are submitting changes to the project, please see CONTRIBUTIONS file for more instructions.

License

This software may be distributed, used, and modified under the terms of BSD license:

Redistribution and use in source and binary forms, with or without modification, are permitted provided that the following conditions are met:

1. Redistributions of source code must retain the above copyright notice, this list of conditions and the following disclaimer.

2. Redistributions in binary form must reproduce the above copyright notice, this list of conditions and the following disclaimer in the documentation and/or other materials provided with the distribution.

3. Neither the name(s) of the above-listed copyright holder(s) nor the names of its contributors may be used to endorse or promote products derived from this software without specific prior written permission.

THIS SOFTWARE IS PROVIDED BY THE COPYRIGHT HOLDERS AND CONTRIBUTORS "AS IS" AND ANY EXPRESS OR IMPLIED WARRANTIES, INCLUDING, BUT NOT LIMITED TO, THE IMPLIED WARRANTIES OF MERCHANTABILITY AND FITNESS FOR A PARTICULAR PURPOSE ARE DISCLAIMED. IN NO EVENT SHALL THE COPYRIGHT OWNER OR CONTRIBUTORS BE LIABLE FOR ANY DIRECT, INDIRECT, INCIDENTAL, SPECIAL, EXEMPLARY, OR CONSEQUENTIAL DAMAGES (INCLUDING, BUT NOT LIMITED TO, PROCUREMENT OF SUBSTITUTE GOODS OR SERVICES; LOSS OF USE, DATA, OR PROFITS; OR BUSINESS INTERRUPTION) HOWEVER CAUSED AND ON ANY THEORY OF LIABILITY, WHETHER IN CONTRACT, STRICT LIABILITY, OR TORT (INCLUDING NEGLIGENCE OR OTHERWISE) ARISING IN ANY WAY OUT OF THE USE OF THIS SOFTWARE, EVEN IF ADVISED OF THE POSSIBILITY OF SUCH DAMAGE.

lighttpd

This projector product includes the open source software program "lighttpd" which applies the terms and conditions provided by owner of the copyright to the "lighttpd".

The "lighttpd" are WITHOUT ANY WARRANTY; without even the implied warranty of MERCHANTABILITY AND FITNESS FOR A PARTICULAR PURPOSE.

List of lighttpd programs

- lighttpd-1.4.35

License terms of conditions of each program which are provided by owner of the copyright to the "lighttpd" are as follows.

Copyright (c) 2004, Jan Kneschke, incremental

All rights reserved.

Redistribution and use in source and binary forms, with or without modification, are permitted provided that the following conditions are met:

Redistributions of source code must retain the above copyright notice, this list of conditions and the following disclaimer.

Redistributions in binary form must reproduce the above copyright notice, this list of conditions and the following disclaimer in the documentation and/or other materials provided with the distribution.

Neither the name of the 'incremental' nor the names of its contributors may be used to endorse or promote products derived from this software without specific prior written permission.

THIS SOFTWARE IS PROVIDED BY THE COPYRIGHT HOLDERS AND CONTRIBUTORS "AS IS" AND ANY EXPRESS OR IMPLIED WARRANTIES, INCLUDING, BUT NOT LIMITED TO, THE IMPLIED WARRANTIES OF MERCHANTABILITY AND FITNESS FOR A PARTICULAR PURPOSE ARE DISCLAIMED. IN NO EVENT SHALL THE COPYRIGHT OWNER OR CONTRIBUTORS BE LIABLE FOR ANY DIRECT, INDIRECT, INCIDENTAL, SPECIAL, EXEMPLARY, OR CONSEQUENTIAL DAMAGES (INCLUDING, BUT NOT LIMITED TO, PROCUREMENT OF SUBSTITUTE GOODS OR SERVICES; LOSS OF USE, DATA, OR PROFITS; OR BUSINESS INTERRUPTION) HOWEVER CAUSED AND ON ANY THEORY OF LIABILITY, WHETHER IN CONTRACT, STRICT LIABILITY, OR TORT (INCLUDING NEGLIGENCE OR OTHERWISE) ARISING IN ANY WAY OUT OF THE USE OF THIS SOFTWARE, EVEN IF ADVISED OF THE POSSIBILITY OF SUCH DAMAGE

PCRE

This projector product includes the open source software program "PCRE" which applies the terms and conditions provided by owner of the copyright to the "PCRE".

The "PCRE" are WITHOUT ANY WARRANTY; without even the implied warranty of MERCHANTABILITY AND FITNESS FOR A PARTICULAR PURPOSE.

List of PCRE programs

- pcre-8.32

License terms of conditions of each program which are provided by owner of the copyright to the "PCRE" are as follows.

PCRE LICENCE

PCRE is a library of functions to support regular expressions whose syntax and semantics are as close as possible to those of the Perl 5 language.

Release 8 of PCRE is distributed under the terms of the "BSD" licence, as specified below. The documentation for PCRE, supplied in the "doc" directory, is distributed under the same terms as the software itself.

The basic library functions are written in C and are freestanding. Also included in the distribution is a set of C++ wrapper functions, and a just-in-time compiler that can be used to optimize pattern matching. These are both optional features that can be omitted when the library is built.

THE BASIC LIBRARY FUNCTIONS

Written by: Philip Hazel

Email local part: ph10

Email domain: cam.ac.uk

University of Cambridge Computing Service, Cambridge, England.

Copyright (c) 1997-2012 University of Cambridge

All rights reserved.

PCRE JUST-IN-TIME COMPILATION SUPPORT

Written by: Zoltan Herczeg

Email local part: hzmester

Emain domain: freemail.hu

Copyright(c) 2010-2012 Zoltan Herczeg

All rights reserved.

STACK-LESS JUST-IN-TIME COMPILER

Written by: Zoltan Herczeg

Email local part: hzmester

Emain domain: freemail.hu

Copyright(c) 2009-2012 Zoltan Herczeg

All rights reserved.

THE C++ WRAPPER FUNCTIONS

Contributed by: Google Inc.

Copyright (c) 2007-2012, Google Inc.

All rights reserved.

THE "BSD" LICENCE

Redistribution and use in source and binary forms, with or without modification, are permitted provided that the following conditions are met:

* Redistributions of source code must retain the above copyright notice, this list of conditions and the following disclaimer.

* Redistributions in binary form must reproduce the above copyright notice, this list of conditions and the following disclaimer in the documentation and/or other materials provided with the distribution.

* Neither the name of the University of Cambridge nor the name of Google Inc. nor the names of their contributors may be used to endorse or promote products derived from this software without specific prior written permission.

THIS SOFTWARE IS PROVIDED BY THE COPYRIGHT HOLDERS AND CONTRIBUTORS "AS IS" AND ANY EXPRESS OR IMPLIED WARRANTIES, INCLUDING, BUT NOT LIMITED TO, THE IMPLIED WARRANTIES OF MERCHANTABILITY AND FITNESS FOR A PARTICULAR PURPOSE ARE DISCLAIMED. IN NO EVENT SHALL THE COPYRIGHT OWNER OR CONTRIBUTORS BE LIABLE FOR ANY DIRECT, INDIRECT, INCIDENTAL, SPECIAL, EXEMPLARY, OR CONSEQUENTIAL DAMAGES (INCLUDING, BUT NOT LIMITED TO, PROCUREMENT OF SUBSTITUTE GOODS OR SERVICES; LOSS OF USE, DATA, OR PROFITS; OR BUSINESS INTERRUPTION) HOWEVER CAUSED AND ON ANY THEORY OF LIABILITY, WHETHER IN CONTRACT, STRICT LIABILITY, OR TORT (INCLUDING NEGLIGENCE OR OTHERWISE) ARISING IN ANY WAY OUT OF THE USE OF THIS SOFTWARE, EVEN IF ADVISED OF THE POSSIBILITY OF SUCH DAMAGE.

End

FastCGI

This projector product includes the open source software program "FastCGI" which applies the terms and conditions provided by owner of the copyright to the "FastCGI"

The "FastCGI" are WITHOUT ANY WARRANTY; without even the implied warranty of MERCHANTABILITY AND FITNESS FOR A PARTICULAR PURPOSE.

List of FastCGI programs

- fcgi-2.4.0

License terms of conditions of each program which are provided by owner of the copyright to the "FastCGI" are as follows.

This FastCGI application library source and object code (the "Software") and its documentation (the "Documentation") are copyrighted by Open Market, Inc ("Open Market"). The following terms apply to all files associated with the Software and Documentation unless explicitly disclaimed in individual files.

Open Market permits you to use, copy, modify, distribute, and license this Software and the Documentation for any purpose, provided that existing copyright notices are retained in all copies and that this notice is included verbatim in any distributions. No written agreement, license, or royalty fee is required for any of the authorized uses. Modifications to this Software and Documentation may be copyrighted by their authors and need not follow the licensing terms described here. If modifications to this Software and Documentation have new licensing terms, the new terms must be clearly indicated on the first page of each file where they apply.

OPEN MARKET MAKES NO EXPRESS OR IMPLIED WARRANTY WITH RESPECT TO THE SOFTWARE OR THE DOCUMENTATION, INCLUDING WITHOUT LIMITATION ANY WARRANTY OF MERCHANTABILITY OR FITNESS FOR A PARTICULAR PURPOSE. IN NO EVENT SHALL OPEN MARKET BE LIABLE TO YOU OR ANY THIRD PARTY FOR ANY DAMAGES ARISING FROM OR RELATING TO THIS SOFTWARE OR THE DOCUMENTATION, INCLUDING, WITHOUT LIMITATION, ANY INDIRECT, SPECIAL OR CONSEQUENTIAL DAMAGES OR SIMILAR DAMAGES, INCLUDING LOST PROFITS OR LOST DATA, EVEN IF OPEN MARKET HAS BEEN ADVISED OF THE POSSIBILITY OF SUCH DAMAGES. THE SOFTWARE AND DOCUMENTATION ARE PROVIDED "AS IS". OPEN MARKET HAS NO LIABILITY IN CONTRACT, TORT, NEGLIGENCE OR OTHERWISE ARISING OUT OF THIS SOFTWARE OR THE DOCUMENTATION.

openssl

This projector product includes the open source software program "openssl" which applies the terms and conditions provided by owner of the copyright to the "openssl".

The "openssl" are WITHOUT ANY WARRANTY; without even the implied warranty of MERCHANTABILITY AND FITNESS FOR A PARTICULAR PURPOSE.

List of OpenSSL programs

- OpenSSL 1.0.2g
- openssl-1.01t

License terms of conditions of each program which are provided by owner of the copyright to the "openssl" are as follows.

LICENSE ISSUES

==========

The OpenSSL toolkit stays under a dual license, i.e. both the conditions of the OpenSSL License and the original SSLeay license apply to the toolkit. See below for the actual license texts. Actually both licenses are BSD-style Open Source licenses. In case of any license issues related to OpenSSL please contact openssl-core@openssl.org.

OpenSSL License

Copyright (c) 1998-2011 The OpenSSL Project. All rights reserved.

Redistribution and use in source and binary forms, with or without modification, are permitted provided that the following conditions are met:

1. Redistributions of source code must retain the above copyright notice, this list of conditions and the following disclaimer.

2. Redistributions in binary form must reproduce the above copyright notice, this list of conditions and the following disclaimer in the documentation and/or other materials provided with the distribution.

3. All advertising materials mentioning features or use of this software must display the following acknowledgment: This product includes software developed by the OpenSSL Project for use in the OpenSSL Toolkit. (http://www.openssl.org)

4. The names "OpenSSL Toolkit" and "OpenSSL Project" must not be used to endorse or promote products derived from this software without prior written permission. For written permission, please contact openssl-core@openssl.org

5. Products derived from this software may not be called "OpenSSL" nor may "OpenSSL" appear in their names without prior written permission of the OpenSSL Project.

6. Redistributions of any form whatsoever must retain the following acknowledgment: "This product includes software developed by the OpenSSL Project for use in the OpenSSL Toolkit (http://www.openssl.org)"

THIS SOFTWARE IS PROVIDED BY THE OpenSSL PROJECT "AS IS" AND ANY EXPRESSED OR IMPLIED WARRANTIES, INCLUDING, BUT NOT LIMITED TO, THE IMPLIED WARRANTIES OF

MERCHANTABILITY AND FITNESS FOR A PARTICULAR PURPOSE ARE DISCLAIMED. IN NO EVENT SHALL THE OpenSSL PROJECT OR ITS CONTRIBUTORS BE LIABLE FOR ANY DIRECT, INDIRECT, INCIDENTAL, SPECIAL, EXEMPLARY, OR CONSEQUENTIAL DAMAGES (INCLUDING, BUT NOT LIMITED TO, PROCUREMENT OF SUBSTITUTE GOODS OR SERVICES; LOSS OF USE, DATA, OR PROFITS; OR BUSINESS INTERRUPTION) HOWEVER CAUSED AND ON ANY THEORY OF LIABILITY, WHETHER IN CONTRACT, STRICT LIABILITY, OR TORT (INCLUDING NEGLIGENCE OR OTHERWISE) ARISING IN ANY WAY OUT OF THE USE OF THIS SOFTWARE, EVEN IF ADVISED OF THE POSSIBILITY OF SUCH DAMAGE.

==========

This product includes cryptographic software written by Eric Young (eay@cryptsoft.com). This product includes software written by Tim Hudson (tjh@cryptsoft.com).

Original SSLeay license

Copyright (c) 1995-1998 Eric Young (eay@cryptsoft.com) All rights reserved. This package is an SSL implementation written by Eric Young (eay@cryptsoft.com). The implementation was written so as to conform with Netscapes SSL. This library is free for commercial and non-commercial use as long as the following conditions are aheared to. The following conditions apply to all code found in this distribution, be it the RC4, RSA, lhash, DES, etc., code; not just the SSL code. The SSL documentation included with this distribution is covered by the same copyright terms except that the holder is Tim Hudson (tjh@cryptsoft.com).

Copyright remains Eric Young's, and as such any Copyright notices in the code are not to be removed. If this package is used in a product, Eric Young should be given attribution as the author of the parts of the library used. This can be in the form of a textual message at program startup or in documentation (online or textual) provided with the package. Redistribution and use in source and binary forms, with or without modification, are permitted provided that the following conditions are met:

1. Redistributions of source code must retain the copyright notice, this list of conditions and the following disclaimer.

2. Redistributions in binary form must reproduce the above copyright notice, this list of conditions and the following disclaimer in the documentation and/or other materials provided with the distribution.

3. All advertising materials mentioning features or use of this software must display the following acknowledgement: "This product includes cryptographic software written by Eric Young (eay@cryptsoft.com)". The word 'cryptographic' can be left out if the routines from the library being used are not cryptographic related.

4. If you include any Windows specific code (or a derivative thereof) from the apps directory (application code) you must include an acknowledgment: "This product includes software written by Tim Hudson (tjh@cryptsoft.com)"

THIS SOFTWARE IS PROVIDED BY ERIC YOUNG "AS IS" AND ANY EXPRESS OR IMPLIED WARRANTIES, INCLUDING, BUT NOT LIMITED TO, THE IMPLIED WARRANTIES OF MERCHANTABILITY AND FITNESS FOR A PARTICULAR PURPOSE ARE DISCLAIMED. IN NO EVENT SHALL THE AUTHOR OR CONTRIBUTORS BE LIABLE FOR ANY DIRECT, INDIRECT, INCIDENTAL, SPECIAL, EXEMPLARY, OR CONSEQUENTIAL DAMAGES (INCLUDING, BUT NOT LIMITED TO, PROCUREMENT OF SUBSTITUTE GOODS OR SERVICES; LOSS OF USE, DATA, OR PROFITS; OR BUSINESS INTERRUPTION) HOWEVER CAUSED AND ON ANY THEORY OF LIABILITY, WHETHER IN CONTRACT, STRICT LIABILITY, OR TORT (INCLUDING NEGLIGENCE OR OTHERWISE) ARISING IN ANY WAY OUT OF THE USE OF THIS SOFTWARE, EVEN IF ADVISED OF THE POSSIBILITY OF SUCH DAMAGE. The licence and distribution terms for any publically available version or derivative of this code cannot be changed. i.e. this code cannot simply be copied and put under another distribution licence, including the GNU Public Licence.

iperf

This projector product includes the open source software program "iperf" which applies the terms and conditions provided by owner of the copyright to the "iperf".

The "iperf" are WITHOUT ANY WARRANTY; without even the implied warranty of MERCHANTABILITY AND FITNESS FOR A PARTICULAR PURPOSE.

List of iperf programs

- iperf-2.0.5

License terms of conditions of each program which are provided by owner of the copyright to the "iperf" are as follows.

Copyright (c) 1999-2007, The Board of Trustees of the University of Illinois

All Rights Reserved.

Iperf performance test

Mark Gates

Ajay Tirumala

Jim Ferguson

Jon Dugan

Feng Qin

Kevin Gibbs

John Estabrook

National Laboratory for Applied Network Research

National Center for Supercomputing Applications

University of Illinois at Urbana-Champaign

http://www.ncsa.uiuc.edu

Permission is hereby granted, free of charge, to any person obtaining a copy of this software (Iperf) and associated documentation files (the "Software"), to deal in the Software without restriction, including without limitation the rights to use, copy, modify, merge, publish, distribute, sublicense, and/or sell copies of the Software, and to permit persons to whom the Software is furnished to do so, subject to the following conditions:

Redistributions of source code must retain the above copyright notice, this list of conditions and the following disclaimers.

Redistributions in binary form must reproduce the above copyright notice, this list of conditions and the following disclaimers in the documentation and/or other materials provided with the distribution.

Neither the names of the University of Illinois, NCSA, nor the names of its contributors may be used to endorse or promote products derived from this Software without specific prior written permission.

THE SOFTWARE IS PROVIDED "AS IS", WITHOUT WARRANTY OF ANY KIND, EXPRESS OR IMPLIED, INCLUDING BUT NOT LIMITED TO THE WARRANTIES OF MERCHANTABILITY, FITNESS FOR A PARTICULAR PURPOSE AND NONINFRINGEMENT. IN NO EVENT SHALL THE CONTIBUTORS OR COPYRIGHT HOLDERS BE LIABLE FOR ANY CLAIM, DAMAGES OR OTHER LIABILITY, WHETHER IN AN ACTION OF CONTRACT, TORT OR OTHERWISE, ARISING FROM, OUT OF OR IN CONNECTION WITH THE SOFTWARE OR THE USE OR OTHER DEALINGS IN THE SOFTWARE.

FreeType

This projector product includes the open source software program "FreeType" which applies the terms and conditions provided by owner of the copyright to the "FreeType".

The "FreeType" are WITHOUT ANY WARRANTY; without even the implied warranty of MERCHANTABILITY AND FITNESS FOR A PARTICULAR PURPOSE.

List of FreeType programs

- freetype-2.4.8

License terms of conditions of each program which are provided by owner of the copyright to the "FreeType" are as follows.

The FreeType Project LICENSE

2006-Jan-27

Copyright 1996-2002, 2006 by David Turner, Robert Wilhelm, and Werner Lemberg

Introduction

==========

The FreeType Project is distributed in several archive packages; some of them may contain, in addition to the FreeType font engine, various tools and contributions which rely on, or relate to, the FreeType Project.

This license applies to all files found in such packages, and which do not fall under their own explicit license. The license affects thus the FreeType font engine, the test programs, documentation and makefiles, at the very least.

This license was inspired by the BSD, Artistic, and IJG (Independent JPEG Group) licenses, which all encourage inclusion and use of free software in commercial and freeware products alike. As a consequence, its main points are that:

- We don't promise that this software works. However, we will be interested in any kind of bug reports. (`as is' distribution)
- You can use this software for whatever you want, in parts or full form, without having to pay us. (`royalty-free' usage)
- You may not pretend that you wrote this software. If you use it, or only parts of it, in a program, you must acknowledge somewhere in your documentation that you have used the FreeType code. (`credits')

We specifically permit and encourage the inclusion of this software, with or without modifications, in commercial products. We disclaim all warranties covering The FreeType Project and assume no liability related to The FreeType Project.

Finally, many people asked us for a preferred form for a credit/disclaimer to use in compliance with this license. We thus encourage you to use the following text:

"""

Portions of this software are copyright © <year> The FreeType Project (www.freetype.org). All rights reserved.

"""

Please replace <year> with the value from the FreeType version you actually use.

Legal Terms

==========

0. Definitions

Throughout this license, the terms `package', `FreeType Project', and `FreeType archive' refer to the set of files originally distributed by the authors (David Turner, Robert Wilhelm, and Werner Lemberg) as the `FreeType Project', be they named as alpha, beta or final release.

`You' refers to the licensee, or person using the project, where `using' is a generic term including compiling the project's source code as well as linking it to form a `program' or `executable'. This program is referred to as `a program using the FreeType engine'.

This license applies to all files distributed in the original FreeType Project, including all source code, binaries and documentation, unless otherwise stated in the file in its original, unmodified form as distributed in the original archive.

If you are unsure whether or not a particular file is covered by this license, you must contact us to verify this.

The FreeType Project is copyright (C) 1996-2000 by David Turner, Robert Wilhelm, and Werner Lemberg. All rights reserved except as specified below.

1. No Warranty

THE FREETYPE PROJECT IS PROVIDED `AS IS' WITHOUT WARRANTY OF ANY KIND, EITHER EXPRESS OR IMPLIED, INCLUDING, BUT NOT LIMITED TO, WARRANTIES OF MERCHANTABILITY AND FITNESS FOR A PARTICULAR PURPOSE. IN NO EVENT WILL ANY OF THE AUTHORS OR COPYRIGHT HOLDERS BE LIABLE FOR ANY DAMAGES CAUSED BY THE USE OR THE INABILITY TO USE, OF THE FREETYPE PROJECT.

2. Redistribution

This license grants a worldwide, royalty-free, perpetual and irrevocable right and license to use, execute, perform, compile, display, copy, create derivative works of, distribute and sublicense the FreeType Project (in both source and object code forms) and derivative works thereof for any purpose; and to authorize others to exercise some or all of the rights granted herein, subject to the following conditions:

- Redistribution of source code must retain this license file (`FTL.TXT') unaltered; any additions, deletions or changes to the original files must be clearly indicated in accompanying documentation. The copyright notices of the unaltered, original files must be preserved in all copies of source files.
- Redistribution in binary form must provide a disclaimer that states that the software is based in part of the work of the FreeType Team, in the distribution documentation. We also encourage you to put an URL to the FreeType web page in your documentation, though this isn't mandatory.

These conditions apply to any software derived from or based on the FreeType Project, not just the unmodified files. If you use our work, you must acknowledge us. However, no fee need be paid to us.

3. Advertising

Neither the FreeType authors and contributors nor you shall use the name of the other for commercial, advertising, or promotional purposes without specific prior written permission.

We suggest, but do not require, that you use one or more of the following phrases to refer to this software in your documentation or advertising materials: `FreeType Project', `FreeType Engine', `FreeType library', or `FreeType Distribution'.

As you have not signed this license, you are not required to accept it. However, as the FreeType Project is copyrighted material, only this license, or another one contracted with the authors, grants you the right to use, distribute, and modify it.

Therefore, by using, distributing, or modifying the FreeType Project, you indicate that you understand and accept all the terms of this license.

4. Contacts

There are two mailing lists related to FreeType:

- freetype@nongnu.org

Discusses general use and applications of FreeType, as well as future and wanted additions to the library and distribution.

If you are looking for support, start in this list if you haven't found anything to help you in the documentation.

- freetype-devel@nongnu.org

Discusses bugs, as well as engine internals, design issues, specific licenses, porting, etc.

Our home page can be found at

http://www.freetype.org

Parent topic: Notices

Binding Arbitration and Class Waiver

1. DISPUTES, BINDING INDIVIDUAL ARBITRATION, AND WAIVER OF CLASS ACTIONS AND CLASS ARBITRATIONS

1.1 **Disputes**. The terms of this Section 1 shall apply to all Disputes between you and Epson. The term "Dispute" is meant to have the broadest meaning permissible under law and includes any dispute, claim, controversy or action between you and Epson arising out of or relating to this Agreement, Epson branded products (hardware and including any related software), or other transaction involving you and Epson, whether in contract, warranty, misrepresentation, fraud, tort, intentional tort, statute, regulation, ordinance, or any other legal or equitable basis. "DISPUTE" DOES NOT INCLUDE IP CLAIMS, or more specifically, a claim or cause of action for (a) trademark infringement or dilution, (b) patent infringement, (c) copyright infringement or misuse, or (d) trade secret misappropriation (an "IP Claim"). You and Epson also agree, notwithstanding Section 1.6,that a court, not an arbitrator, may decide if a claim or cause of action is for an IP Claim.

1.2 **Binding Arbitration**. You and Epson agree that all Disputes shall be resolved by binding arbitration according to this Agreement. **ARBITRATION MEANS THAT YOU WAIVE YOUR RIGHT TO A JUDGE OR JURY IN A COURT PROCEEDING AND YOUR GROUNDS FOR APPEAL ARE LIMITED**. Pursuant to this Agreement, binding arbitration shall be administered by JAMS, a nationally recognized arbitration authority, pursuant to its code of procedures then in effect for consumer related disputes, but excluding any rules that permit joinder or class actions in arbitration (for more detail on procedure, see Section 1.6 below). You and Epson understand and agree that (a) the Federal Arbitration Act (9 U.S.C. §1, et seq.) governs the interpretation and enforcement of this Section 1, (b) this Agreement memorializes a transaction in interstate commerce, and (c) this Section 1 shall survive termination of this Agreement.

1.3 **Pre-Arbitration Steps and Notice**. Before submitting a claim for arbitration, you and Epson agree to try, for sixty (60) days, to resolve any Dispute informally. If Epson and you do not reach an agreement to resolve the Dispute within the sixty (60) days), you or Epson may commence an arbitration. Notice to Epson must be addressed to: Epson America, Inc., ATTN: Legal Department, 3840 Kilroy Airport Way, Long Beach, CA 90806 (the "Epson Address"). The Dispute Notice to you will be sent to the most recent address Epson has in its records for you. For this reason, it is important to notify us if your address changes by emailing us at EAILegal@ea.epson.com or writing us at the Epson Address above. Notice of the Dispute shall include the sender's name, address and contact information, the facts giving rise to the Dispute, and the relief requested (the "Dispute Notice"). Following receipt of the Dispute Notice, Epson and you agree to act in good faith to resolve the Dispute before commencing arbitration.

1.4 **Small Claims Court**. Notwithstanding the foregoing, you may bring an individual action in the small claims court of your state or municipality if the action is within that court's jurisdiction and is pending only in that court.

1.5 **WAIVER OF CLASS ACTIONS AND CLASS ARBITRATIONS. YOU AND EPSON AGREE THAT EACH PARTY MAY BRING DISPUTES AGAINST THE OTHER PARTY ONLY IN AN INDIVIDUAL CAPACITY, AND NOT AS A PLAINTIFF OR CLASS MEMBER IN ANY CLASS OR REPRESENTATIVE PROCEEDING, INCLUDING WITHOUT LIMITATION FEDERAL OR STATE CLASS ACTIONS, OR CLASS ARBITRATIONS. CLASS ACTION LAWSUITS, CLASS-WIDE ARBITRATIONS, PRIVATE ATTORNEY-GENERAL ACTIONS, AND ANY OTHER PROCEEDING WHERE SOMEONE ACTS IN A REPRESENTATIVE CAPACITY ARE NOT ALLOWED. ACCORDINGLY, UNDER THE ARBITRATION PROCEDURES OUTLINED IN THIS SECTION, AN ARBITRATOR SHALL NOT COMBINE OR CONSOLIDATE MORE THAN ONE PARTY'S CLAIMS WITHOUT THE WRITTEN CONSENT OF ALL AFFECTED PARTIES TO AN ARBITRATION PROCEEDING.**

1.6 **Arbitration Procedure**. If you or Epson commences arbitration, the arbitration shall be governed by the rules of JAMS that are in effect when the arbitration is filed, excluding any rules that permit arbitration on a class or representative basis (the "JAMS Rules"), available at http://www.jamsadr.com or by calling 1-800-352-5267, and under the rules set forth in this Agreement. All Disputes shall be resolved by a single neutral arbitrator, and both parties shall have a reasonable opportunity to participate in the selection of the arbitrator. The arbitrator is bound by the terms of this Agreement. The arbitrator, and not any federal, state or local court or agency, shall have exclusive authority to resolve all disputes arising out of or relating to the interpretation, applicability, enforceability or formation of this Agreement, including any claim that all or any part of this Agreement is void or voidable. Notwithstanding this broad delegation of authority to the arbitrator, a court may determine the limited question of whether a claim or cause of action is for an IP Claim, which is excluded from the definition of "Disputes" in Section 1.1 above. The arbitrator shall be empowered to grant whatever relief would be available in a court under law or in equity. The arbitrator may award you the same damages as a court could, and may award declaratory or injunctive relief only in favor of the individual party seeking relief and only to the extent necessary to provide relief warranted by that party's individual claim. In some instances, the costs of arbitration can exceed the costs of litigation and the right to discovery may be more limited in arbitration than in court. The arbitrator's award is binding and may be entered as a judgment in any court of competent jurisdiction.

You may choose to engage in arbitration hearings by telephone. Arbitration hearings not conducted by telephone shall take place in a location reasonably accessible from your primary residence, or in Orange County, California, at your option.

a) Initiation of Arbitration Proceeding. If either you or Epson decides to arbitrate a Dispute, both parties agree to the following procedure:

(i) Write a Demand for Arbitration. The demand must include a description of the Dispute and the amount of damages sought to be recovered. You can find a copy of a Demand for Arbitration at http://www.jamsadr.com ("Demand for Arbitration").

(ii) Send three copies of the Demand for Arbitration, plus the appropriate filing fee, to: JAMS, 500 North State College Blvd., Suite 600 Orange, CA 92868, U.S.A.

(iii) Send one copy of the Demand for Arbitration to the other party (same address as the Dispute Notice), or as otherwise agreed by the parties.

b) Hearing Format. During the arbitration, the amount of any settlement offer made shall not be disclosed to the arbitrator until after the arbitrator determines the amount, if any, to which you or Epson is entitled. The discovery or exchange of non-privileged information relevant to the Dispute may be allowed during the arbitration.

c) Arbitration Fees. Epson shall pay, or (if applicable) reimburse you for, all JAMS filings and arbitrator fees for any arbitration commenced (by you or Epson) pursuant to provisions of this Agreement.

d) Award in Your Favor. For Disputes in which you or Epson seeks $75,000 or less in damages exclusive of attorney's fees and costs, if the arbitrator's decision results in an award to you in an amount greater than Epson's last written offer, if any, to settle the Dispute, Epson will: (i) pay you $1,000 or the amount of the award, whichever is greater; (ii) pay you twice the amount of your reasonable attorney's fees, if any; and (iii) reimburse you for any expenses (including expert witness fees and costs) that your attorney reasonably accrues for investigating, preparing, and pursuing the Dispute in arbitration. Except as agreed upon by you and Epson in writing, the arbitrator shall determine the amount of fees, costs, and expenses to be paid by Epson pursuant to this Section 1.6d).

e) Attorney's Fees. Epson will not seek its attorney's fees and expenses for any arbitration commenced involving a Dispute under this Agreement. Your right to attorney's fees and expenses under Section 1.6d) above does not limit your rights to attorney's fees and expenses under applicable law; notwithstanding the foregoing, the arbitrator may not award duplicative awards of attorney's fees and expenses.

1.7 **Opt-out. You may elect to opt-out (exclude yourself) from the final, binding, individual arbitration procedure and waiver of class and representative proceedings specified in this Agreement by sending a written letter to the Epson Address within thirty (30) days of your assent to this Agreement (including without limitation the purchase, download, installation of the Software or other applicable use of Epson Hardware, products and services) that specifies (i) your name, (ii) your mailing address, and (iii) your request to be excluded from the final, binding individual arbitration procedure and waiver of class and representative proceedings specified in this Section 1. In the event that you opt-out consistent with the procedure set forth above, all other terms shall continue to apply, including the requirement to provide notice prior to litigation.**

1.8 **Amendments to Section 1**. Notwithstanding any provision in this Agreement to the contrary, you and Epson agree that if Epson makes any future amendments to the dispute resolution procedure and class action waiver provisions (other than a change to Epson's address) in this Agreement, Epson will obtain your affirmative assent to the applicable amendment. If you do not affirmatively assent to the applicable amendment, you are agreeing that you will arbitrate any Dispute between the parties in accordance with the language of this Section 1 (or resolve disputes as provided for in Section 1.7, if you timely elected to opt-out when you first assented to this Agreement).

1.9 **Severability**. If any provision in this Section 1 is found to be unenforceable, that provision shall be severed with the remainder of this Agreement remaining in full force and effect. **The foregoing shall not apply to the prohibition against class or representative actions as provided in Section 1.5. This means that if Section 1.5 is found to be unenforceable, the entire Section 1 (but only Section 1) shall be null and void.**

Parent topic: Notices

Trademarks

EPSON®, EasyMP®, Instant Off®, PowerLite®, and Quick Corner® are registered trademarks, and EPSON Exceed Your Vision is a registered logomark of Seiko Epson Corporation.

Accolade® and PrivateLine® are registered trademarks; Duet™ and SizeWise™ are trademarks; and Extra Care℠ is a service mark of Epson America, Inc.

Mac and OS X are trademarks of Apple Inc., registered in the U.S. and other countries.

Google® is a registered trademark and Android™ is a trademark of Google Inc.

HDMI and High-Definition Multimedia Interface are the trademarks or registered trademarks of HDMI Licensing LLC.

Miracast® and Wi-Fi Direct® are registered trademarks of Wi-Fi Alliance®.

General Notice: Other product names used herein are for identification purposes only and may be trademarks of their respective owners. Epson disclaims any and all rights in those marks.

EPSON®
EXCEED YOUR VISION

Parent topic: Notices

Copyright Notice

All rights reserved. No part of this publication may be reproduced, stored in a retrieval system, or transmitted in any form or by any means, electronic, mechanical, photocopying, recording, or otherwise, without the prior written permission of Seiko Epson Corporation. The information contained herein is designed only for use with this Epson product. Epson is not responsible for any use of this information as applied to other products.

Neither Seiko Epson Corporation nor its affiliates shall be liable to the purchaser of this product or third parties for damages, losses, costs, or expenses incurred by purchaser or third parties as a result of:

accident, misuse, or abuse of this product or unauthorized modifications, repairs, or alterations to this product, or (excluding the U.S.) failure to strictly comply with Seiko Epson Corporation's operating and maintenance instructions.

Seiko Epson Corporation shall not be liable for any damages or problems arising from the use of any options or any consumable products other than those designated as Original Epson Products or Epson Approved Products by Seiko Epson Corporation.

This information is subject to change without notice.

A Note Concerning Responsible Use of Copyrighted Materials
Copyright Attribution

Parent topic: Notices

A Note Concerning Responsible Use of Copyrighted Materials

Epson encourages each user to be responsible and respectful of the copyright laws when using any Epson product. While some countries' laws permit limited copying or reuse of copyrighted material in certain circumstances, those circumstances may not be as broad as some people assume. Contact your legal advisor for any questions regarding copyright law.

Parent topic: Copyright Notice

Copyright Attribution

© 2017 Epson America, Inc.

1/17

CPD-52793

Parent topic: Copyright Notice