PowerLite® 83V+
Multimedia Projector

User's Guide

Important Safety Information

WARNING: Never look into the projector lens when the lamp is turned on; the bright light can damage your eyes. Never let children look into the lens when it is on. Never open any cover on the projector, except the lamp and filter covers. Dangerous electrical voltages inside the projector can severely injure you. Except as specifically explained in this *User's Guide*, do not attempt to service this product yourself. Refer all servicing to qualified service personnel.

WARNING: The projector and its accessories come packaged in plastic bags. Keep plastic bags away from small children to avoid any risk of suffocation.

Caution: When you replace the lamp, never touch the new lamp with your bare hands; the invisible residue left by the oil on your hands may shorten the lamp life. Use a cloth or glove to handle the new lamp.

Copyright Notice

All rights reserved. No part of this publication may be reproduced, stored in a retrieval system, or transmitted in any form or by any means, electronic, mechanical, photocopying, recording, or otherwise, without the prior written permission of Seiko Epson Corporation. The information contained herein is designed only for use with this Epson product. Epson is not responsible for any use of this information as applied to other products.

Neither Seiko Epson Corporation nor its affiliates shall be liable to the purchaser of this product or third parties for damages, losses, costs, or expenses incurred by purchaser or third parties as a result of: accident, misuse, or abuse of this product or unauthorized modifications, repairs, or alterations to this product, or (excluding the U.S.) failure to strictly comply with Seiko Epson Corporation's operating and maintenance instructions.

Seiko Epson Corporation shall not be liable for any damages or problems arising from the use of any options or any consumable products other than those designated as Original Epson Products or Epson Approved Products by Seiko Epson Corporation.

Trademarks

Epson and Instant Off are registered trademarks, and Epson Exceed Your Vision is a registered logomark of Seiko Epson Corporation.

PowerLite, PrivateLine, and Accolade are registered trademarks; Duet and SizeWise are trademarks; and Epson Store and Extra Care are service marks of Epson America, Inc.

Pixelworks, DNX, and the DNX logo are trademarks of Pixelworks, Inc.

General Notice: Other product names used herein are for identification purposes only and may be trademarks of their respective owners. Epson disclaims any and all rights in those marks.

This information is subject to change without notice.

© 2009 Epson America, Inc.

11/09
CPD-27735

Contents

Welcome 7
Getting the Most from Your Projector 8
Using Your Documentation 9
Getting More Information 9
Registration and Warranty 10
Unpacking the Projector 10
Projector Parts 11
Additional Components 12
Optional Accessories 13

1 *Setting Up the Projector* 15
Positioning the Projector 16
Other Installations 17
Connecting to a Computer 18
Connecting with the VGA Cable 18
Connecting with a VGA-5BNC Cable 19
Connecting an External Monitor 21
Playing Sound Through the Projector 22
Connecting External Speakers 23
Connecting to Video Sources 24
Connecting a Composite Video Source 25
Connecting an S-Video Source 26
Connecting an RGB Video Source 27
Connecting a Component Video Source 28
Playing Sound Through the Projector 29

2 *Projecting* 33
Turning On Your Equipment 34
Turning On the Projector 34
Selecting the Image Source. 36
What To Do If You See a Blank Screen 36
Adjusting the Image 38
Focusing and Zooming Your Image. 38
Adjusting the Height of Your Image 39
Adjusting the Image Shape. 40
Adjusting the Brightness 40
Correcting Computer Images. 41
Adjusting the Volume 41
Shutting Down the Projector 42

3 *Using the Remote Control* 43
Controlling the Picture and Sound. 44
Switching Between Picture Sources 44
Adjusting the Color Mode 45
Turning Off the Picture and Sound. 46
Stopping Action 46
Zooming Your Image. 47
Changing the Image's Aspect Ratio 47
Replacing the Batteries 48

4 *Fine-tuning the Projector*. 49
Using the Projector's Menu System 50
Changing Menu Settings 51
Adjusting Colors and Clarity 52
Adjusting the Input Signal 54
Customizing Projector Features 56
Selecting Projector Setup Options 58
Viewing Lamp Usage and Other Information. 60

Using the Projector's Security Features. 61
Creating Your Own Screen Logo. 63
Setting a Password 64
Turning On the Password and User's Logo 65
Starting the Projector with a Password. 66
Disabling the Projector's Buttons 67
Installing Security Locks 67
Restoring the Default Settings 68

5 *Maintenance and Transportation* 69
Cleaning the Lens 70
Cleaning the Projector Case. 70
Cleaning and Replacing the Air Filter 70
Replacing the Lamp. 72
Resetting the Lamp Timer. 75
Transporting the Projector. 76

6 *Solving Problems* 77
Using On-Screen Help. 78
What To Do When the Lights Flash 78
Solving Problems with the Image or Sound 80
Solving Password Problems 85
Solving Problems with the Remote Control. 86
Where To Get Help. 87
Speak to a Support Representative. 87

A *Technical Specifications*. 89
General 89
Projection Lamp 90
Remote Control. 90
Dimensions 90
Electrical 90
Environmental. 91
Safety and Approvals 91

Compatible Video Formats 92
Compatible Computer Display Formats. 93

B *Notices* 97
Important Safety Instructions. 97
FCC Compliance Statement. 99

Index. 101

Welcome

The PowerLite® 83V+ is a portable projector that weighs less than 7 pounds, and offers up to 2200 lumens of brightness (white light output and color light output). From classrooms to boardrooms, your full-color presentations and videos will be bright and vibrant even in ordinary indoor lighting.

Images are displayed at a native resolution of 1024 × 768 pixels. Epson 3LCD technology ensures true to life color and remarkable saturation, even in well-lit rooms.

You can connect the projector to a wide range of computers, including IBM®-compatible PCs and laptops, Apple® Macintosh,® PowerPC® and Intel® Core™ Macintosh computers, PowerBook® computers, and many iMac® and iBook® series systems. With Epson's patented SizeWise™ technology, the projector supports computer displays ranging from VGA through UXGA.

You can use any of the following video sources: HDTV, VCR, DVD player, gaming console (such as Microsoft® Xbox,™ Sony® PlayStation® 3, and Nintendo Wii™), camcorder, or digital camera. The projector supports NTSC, PAL, and SECAM video formats.

You can connect up to four devices to the projector at the same time. With the projector's Source Search button, you don't even have to identify your input source. Just press the button until you see the image you want on the screen.

To prevent unauthorized use of the projector, you can assign a password, create a user logo which is displayed at startup to identify the projector, and disable the projector's buttons through a full or partial Operation Lock feature. For more information about security features, see page 61.

Getting the Most from Your Projector

Depending on your presentation, you can take advantage of any or all of these options:

- Connecting to a laptop or other computer
  If you want to connect the projector to a laptop or desktop computer, see page 18. For additional presentation control, you can connect an external monitor to view the presentation on your computer simultaneously.
- Connecting to video sources
  You can connect a DVD player, VCR, HDTV, camcorder, digital camera, and other video sources to your projector. See page 24 for instructions.
- Using the remote control
  The remote control lets you switch from computer to video sources, zoom in on part of your image, freeze or mute the presentation, and adjust many other projector features. For details, see Chapter 3.
- Enhancing sound in your presentation
  By connecting your projector to external speakers, you can enhance the audio impact of your presentations.

Using Your Documentation

In addition to this manual, your documentation includes a *Quick Setup* sheet, warranty brochures, and an Epson PrivateLine® Support card.

The *Quick Setup* sheet gives instructions to quickly set up your projector and connect it to a computer or video device.

This book contains all the information you need to set up and use your projector. Please follow these guidelines as you read through it:

- Warnings must be followed carefully to avoid bodily injury.
- Cautions must be observed to avoid damage to your equipment.
- Notes contain important information about your projector.

Getting More Information

Need quick steps for setting up your projector? Here's where you can look for help:

- Built-in help system
  Press the Help button on the remote control or projector to get quick solutions for common problems. See page 78 for details.
- www.epson.com/support
  Download FAQs (frequently asked questions) and e-mail your questions to Epson support on the PowerLite 83V+.

If you still need help after checking this *User's Guide* and the sources listed above, you can use the Epson PrivateLine Support service to get help fast. Call (800) 637-7661 and enter the PIN on your PrivateLine Support card. See page 87 for more information.

Registration and Warranty

Your projector comes with a basic warranty that lets you project with confidence. For details, see the warranty brochure included with your projector.

In addition, Epson offers free Extra Care℠ Road Service. In the unlikely event of an equipment failure, you won't have to wait for your unit to be repaired. Instead, Epson will ship you a replacement unit anywhere in the United States or Canada. See the brochure included with your projector for details.

You can register using the included CD, or you can register online at www.epson.com/webreg. Registering also lets you receive special updates on new accessories, products, and service.

Unpacking the Projector

After unpacking the projector, make sure you have all these items:

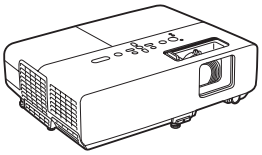

Projector

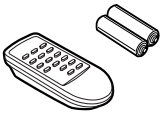

Remote control and batteries

Password Protected Sticker

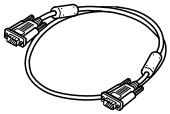

VGA computer cable

Power cord

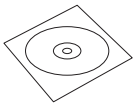

PDF *User's Guide* CD-ROM

Save all packaging in case you need to ship the projector. Always use the original packaging (or equivalent) when you send the projector to another location. See page 76 for transportation instructions.

Projector Parts

Front

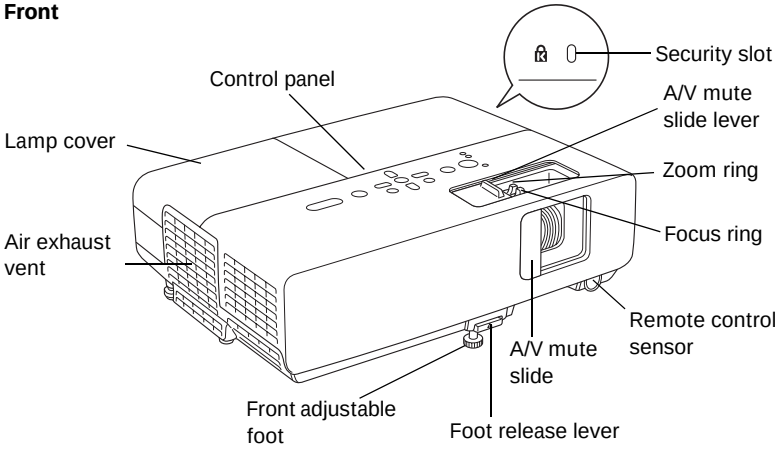

Back

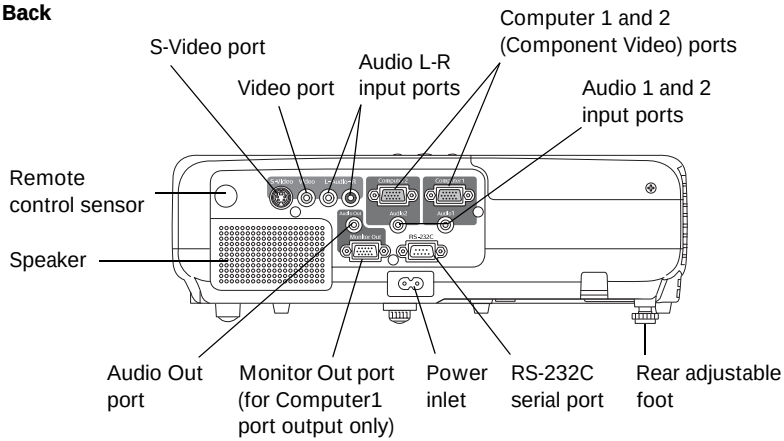

Bottom

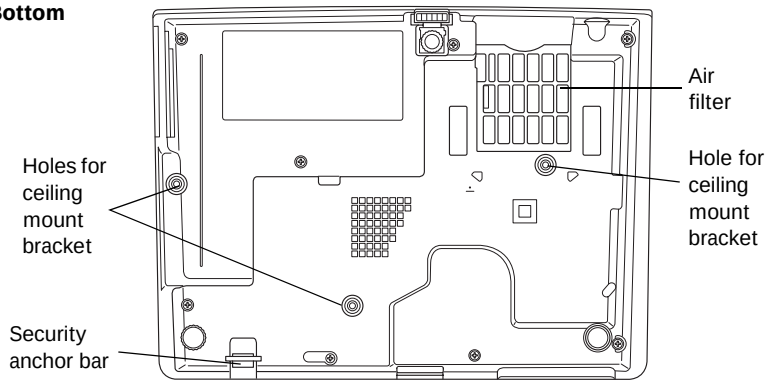

Control Panel

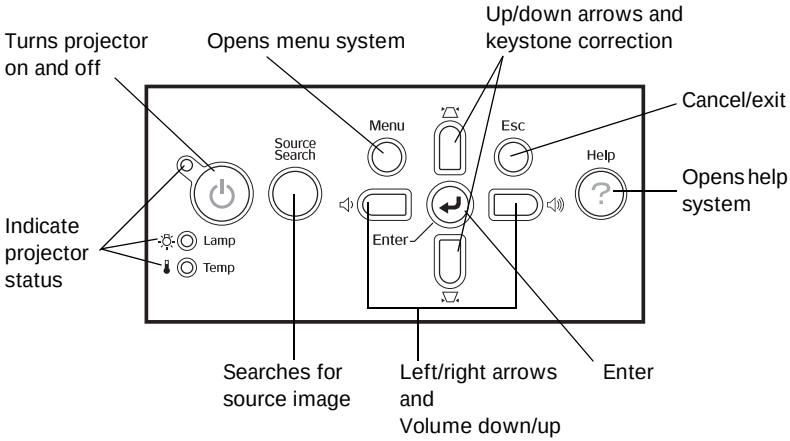

Additional Components

Depending on how you plan to use the projector, you may need additional components:

- To receive an S-Video signal, you need an S-Video cable. One is usually provided with your video device or you can purchase it from Epson. See page 13.
- To receive a component video signal from a VCR or other video device, you need a D-sub, 15-pin, component-to-VGA video cable, which is available from Epson. See page 13.
- To receive an audio signal, you need a commercially available audio cable; see your computer or electronics dealer.

Optional Accessories

To enhance your use of the projector, Epson provides the following optional accessories:

Product	Product number
Replacement lamp	V13H010L42
Air filter set (includes 2 filters)	V13H134A13
Component-to-VGA video cable S-Video cable	ELPKC19 ELPSV01
Distribution amplifier	ELPDA01
50-inch portable screen (4:3 aspect ratio) 80-inch portable pop-up screen (4:3 aspect ratio) Accolade® Duet™ Ultra Portable Projector screen (4:3 and 16:9 aspect ratio)	ELPSC06 ELPSC08 ELPSC80
DC-06 document camera (ELPDC06) DC-10S document camera	V12H321001 ELPDC10S
Kensington® security lock	ELPSL01
Universal projector ceiling mount Advanced Projector Ceiling Mount with Precision Gear False ceiling plate kit Adjustable suspended ceiling channel kit Structural Round Ceiling Plate Adjustable Extension Column (Pipe) 8"-11" High Security Projector Ceiling Mount	ELPMBPJF ELPMBPRG ELPMBP02 ELPMBP01 ELPMBP03 ELPMBC01 ELPMBATA
Soft Carrying Case, Projector Only (ELPKS60) Molded Hard Shell Wheeled Carrying Case Soft Shoulder Case for Projector/Notebook Replacement Projector Remote Control AP-60 Projector Sound Solution	V12H001K60 ELPKS58 ELPKS61 1456641 V12H329020

You can purchase screens, carrying cases, or other accessories from an Epson authorized reseller. To find the nearest reseller, call 800-GO-EPSON (800-463-7766). Or you can purchase online at www.epsonstore.com (U.S. sales) or www.epson.ca (Canadian sales).

1 Setting Up the Projector

This chapter tells you how to set up the projector and connect it to a computer or video source. You can connect up to four devices simultaneously: four video sources, or two computer and two video sources.

You'll find instructions for the following in this chapter:

- Positioning the projector
- Connecting to a computer
- Connecting to video sources

Positioning the Projector

Before connecting the projector, you need to decide where to place it. If you're setting up the projector yourself and it isn't already installed in the room you're using, you'll probably want to place it on a table in front of the screen, as shown.

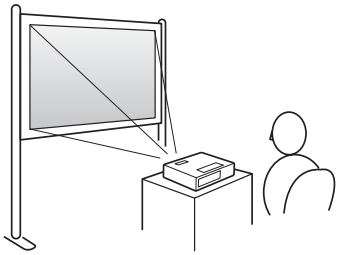

This lets you stand in the front of the room, face the audience, and remain close enough to the equipment to be able to control it. Try to leave as much space as possible between the projector and the screen to get a good-size image.

note

You can use the Image Size Calculator *on the Epson website to determine how large an image will be at different projection distances.*

Place the projector somewhere between 3 and 30 feet from the screen. Use the figure below to help you determine exactly how far. Image size increases with distance, but can vary depending on how you've adjusted the optical zoom and other settings.

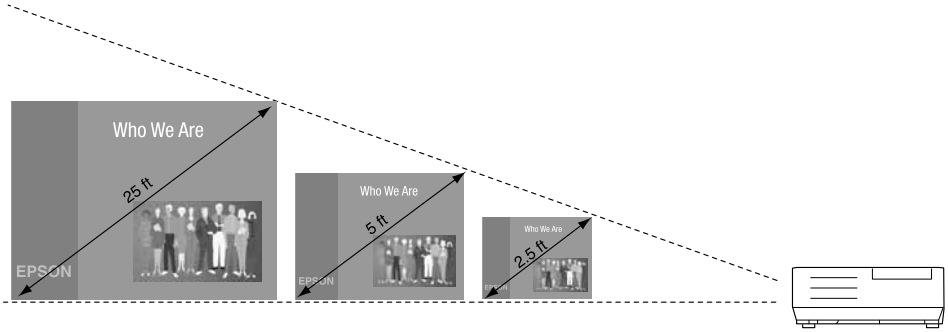

28 to 34 ft (4:3)
31 ft (16:9; wide only)

5.6 to 6.8 ft (4:3)
6.1 to 7.3 ft (16:9)

2.7 to 3 ft (4:3)
3 to 3.6 ft (16:9)

Also keep these considerations in mind:

- Place the projector on a sturdy, level surface.
- Make sure there is plenty of space for ventilation around and under the projector. Do not set the projector on top of loose papers that could block the vents under the projector.
- Make sure the projector is within 6 feet (2 meters) of a grounded electrical outlet or extension cord.

Try to place the projector directly in front of the center of the screen, facing it toward the screen squarely. If the projector isn't positioned this way, the image will be "keystone" shaped, instead of square or rectangular.

If you place the projector below the level of the screen, you'll have to tilt it up by extending the front adjustable foot, as described on page 39. This also causes the image to lose its rectangular shape. You can adjust the shape using the buttons on the projector (see page 40), or using the projector's menu system (see page 49).

The Auto Keystone feature corrects the distortion automatically. See page 57 for more information about Auto Keystone correction. If necessary, you can adjust the image shape manually as described on page 40.

Other Installations

You can also project from behind the screen or from the ceiling, with the projector mounted upside-down:

Rear projection (using a translucent screen)

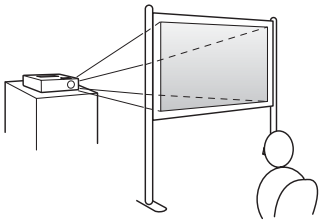

Front/ceiling projection

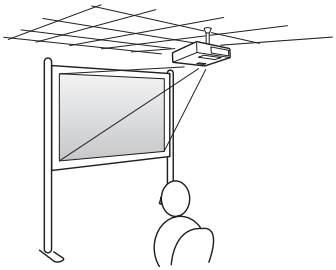

Rear/ceiling projection (using a translucent screen)

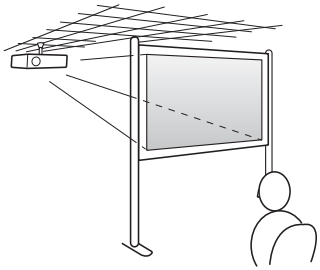

To project from overhead, you'll need the optional ceiling mount hardware. (See page 13 for ordering information.) You'll also need to select Front/Ceiling or Rear/Ceiling for the Projection option in the Extended menu. To project from the rear, select Rear. See page 58 for more information.

Connecting to a Computer

note
If you have an iBook with an RCA video-out port, follow the instructions for connecting to a video device on page 25.

You can connect the projector to any computer that has a standard VGA or BNC monitor port, including PC notebook and laptop computers, Macintosh PowerBooks and iBooks, and hand-held devices.

Follow the instructions in this section to:

- Connect the projector to your computer with the VGA cable included with the projector.
- Connect the projector to your computer with a commercially available VGA–5BNC cable.

After connecting the projector to your computer, you may also want to:

- Connect a monitor to the projector so you can view your presentation close-up as well as on-screen (not necessary if you're using a laptop); see page 21.
- Connect the projector to your computer with a commercially available audio cable to play computer audio; see page 22.

Connecting with the VGA Cable

Follow these instructions to connect to your computer with the VGA cable that came with your projector. Before you start, make sure your computer and the projector are turned off.

1. If you are connecting the projector to a desktop computer, disconnect the monitor cable from your computer.
2. Locate the VGA computer cable that came with the projector.

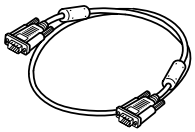

VGA computer cable

Connect one end of the cable to the projector's Computer1 or Computer2 port.

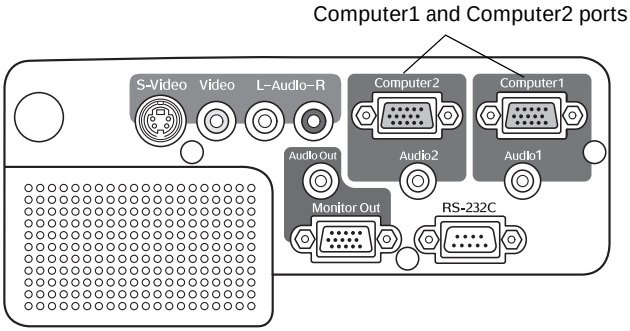

3. Connect the other end of the cable to your computer's video-out or monitor port.
4. If you connected the computer to the Computer1 port and you want to view the display simultaneously on your computer monitor and the projector screen, see "Connecting an External Monitor" on page 21.
5. To play audio from your computer through the projector speakers, see "Playing Sound Through the Projector" on page 22.
6. Tighten the screws on the connectors.

If you don't need to make any other connections, you can plug in your projector and turn it on. See page 34 for instructions.

If more than one device is connected to the projector, select the correct source after projection starts by pressing the Source Search button on the projector or remote control. See page 36.

Connecting with a VGA-5BNC Cable

If your computer provides video output through BNC connectors, follow these instructions to connect the projector to your computer with an optional VGA-5BNC cable. Before you start, make sure your computer and the projector are turned off.

VGA-5BNC cable

1. Disconnect the monitor cable from your computer.

2. Connect the cable's VGA connector to the projector's Computer1 or Computer2 port.

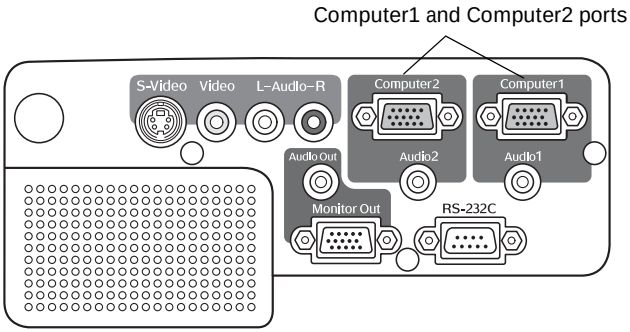

3. Connect the BNC connectors to your computer's BNC ports.
4. If you want to view the display simultaneously on your computer monitor and the projector screen, see "Connecting an External Monitor" on page 21.
5. To play audio from your computer through the projector speakers, see "Playing Sound Through the Projector" on page 22.
6. Tighten the screws on the VGA connector.

If you don't need to make any other connections, you can plug in your projector and turn it on. See page 34 for instructions.

If more than one device is connected to the projector, select the correct source after projection starts by pressing the Source Search button on the projector or remote control. See page 36.

Connecting an External Monitor

If you want to see your presentation close-up as well as on the projection screen, you can connect an external monitor to the projector. This lets you view images on your computer monitor while the projector is in standby mode (plugged in but not turned on) and check your presentation or switch between picture sources even if you've pressed the A/V Mute button on the remote control to turn off projection on the screen.

Simultaneous display is possible only when the computer is connected to the projector's Computer1 port.

Make sure the projector and computer are off. Then connect the monitor's cable to the projector's Monitor Out port, as shown:

note

Some LCD monitors may not be able to display the image correctly. If you have trouble displaying the image, connect a multiscan monitor. If you're projecting computer images, make sure the computer's refresh rate is set to 65 Hz or greater.

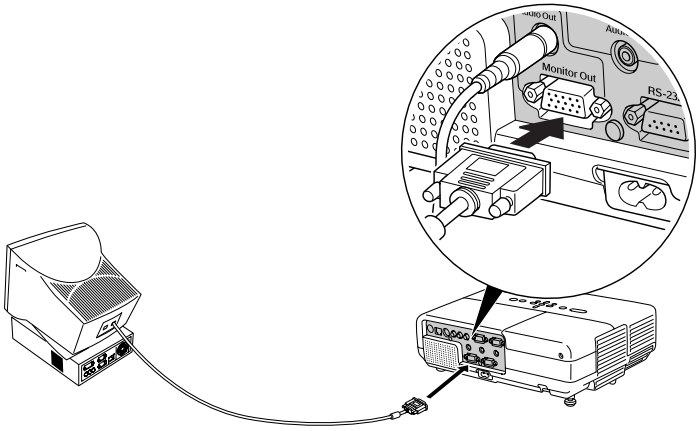

If you don't need to make any other connections, you can plug in your projector and turn it on. See page 34 for instructions.

Playing Sound Through the Projector

You can connect a commercially available 3.5 mm stereo mini-jack audio cable to take advantage of the projector's built-in speaker. You can obtain the audio cable from a computer or electronics dealer.

1. Connect one end of the 3.5 mm stereo mini-jack audio cable to the corresponding Audio1 or Audio2 jack on the projector.

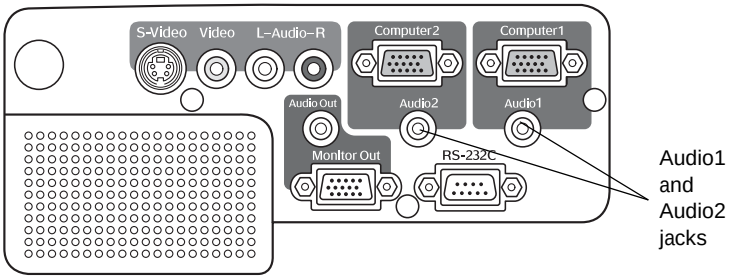

2. Connect the other end of the audio cable to your laptop's 🎧 headphone jack or 🔊 audio-out jack, or your desktop's speaker or audio-out port.

If you don't need to make any other connections, you can plug in your projector and turn it on. See page 34 for instructions.

Connecting External Speakers

You can output sound to external speakers with built-in amplifiers. When you play sound through external speakers, the projector's built-in speaker system is disabled.

1. Locate the appropriate cable to connect your speakers.

   Depending on your speakers, you may be able to use a commercially available audio cable with a stereo mini-jack connector on one end and pin jacks on the other end. For some speakers, you may have to purchase a special cable or use an adapter.

2. Connect the stereo mini-jack end of the audio cable to the Audio Out port on the projector.

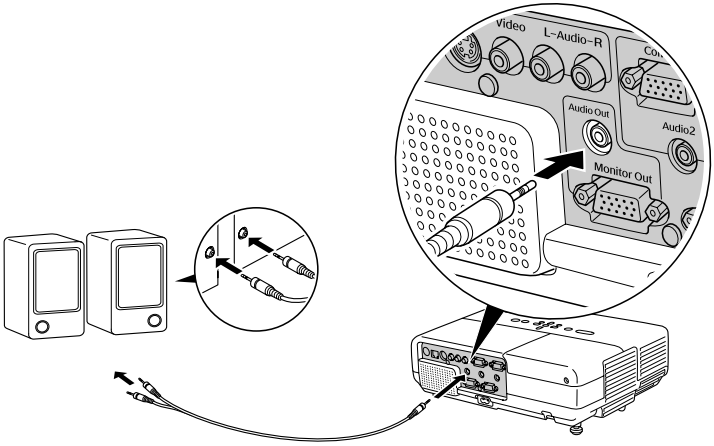

3. Connect the other end of the cable to your speakers.

When you use external speakers with the projector, you can use the 🔈 or 🔊 volume buttons on the projector or the Vol- and Vol+ buttons on the remote control to adjust the volume. First, you need to select the maximum volume on the external speakers. Then you can use the projector or remote control buttons for further adjustments.

Connecting to Video Sources

You can connect a DVD player, VCR, camcorder, digital camera, gaming console, or any other compatible video source to your projector. You can connect up to four video devices at one time.

note
The projector does not support TV antenna cable F connectors.

The projector supports HDTV, SDTV, NTSC, PAL, and SECAM, and automatically detects the video format. It can receive composite video, S-Video, RGB video, and component video. The type of cable you need depends on the video source:

- For composite video, use a commercially available RCA A/V cable. See page 25.
- For S-Video, use the S-Video cable supplied with your video device or order one from Epson. See page 26.
- For RGB video, use the VGA computer cable included with the projector. See page 27.
- For component video, you'll need the optional Epson component-to-VGA video cable. See page 28.

After connecting your video device to the projector, you may want to connect an audio cable to play sound from your video equipment through the projector's built-in speaker or external speakers. See page 29 for instructions.

Connecting a Composite Video Source

If you're connecting a composite video device, use a commercially available RCA A/V cable. Before starting, make sure the projector and your DVD player or other video source are turned off.

1. Connect the yellow RCA plug on one end of the cable to the projector's yellow Video port.

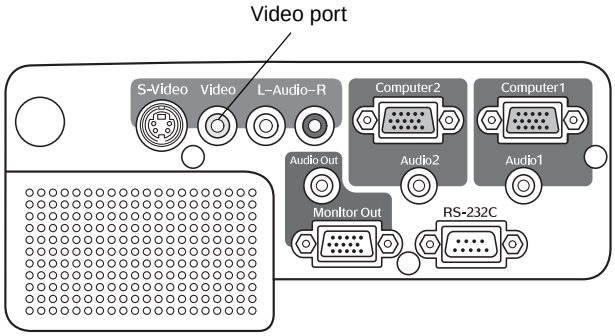

2. Connect the yellow plug on the other end of the cable to the video-out port on your video source.
3. To play sound through the projector, follow the instructions beginning on page 29.

If you don't need to make any other connections, you can plug in your projector and turn it on. See page 34 for instructions.

If more than one device is connected to the projector, select the correct source after projection starts by pressing the Source Search button on the projector or remote control. See page 36.

Connecting an S-Video Source

If your video source has an S-Video jack, you can use it to project a higher quality video image. You'll need an S-Video cable, which is usually provided with your video source, or you can purchase one from Epson (part number ELPSV01). See page 13 for ordering information.

Before starting, make sure the projector and your DVD player or other video source are turned off.

1. Insert one end of the S-Video cable into the projector's S-Video port and the other end into the S-Video output port of your video source.

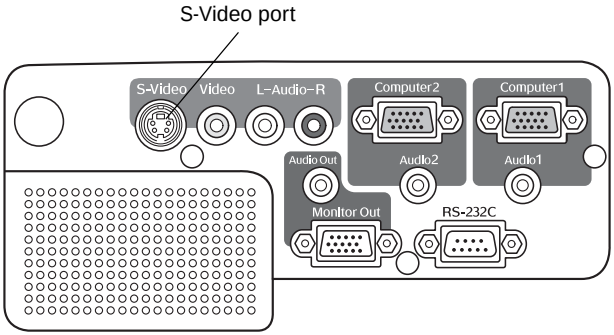

2. To play sound through the projector, follow the instructions beginning on page 29.

If you don't need to make any other connections, you can plug in your projector and turn it on. See page 34 for instructions.

If more than one device is connected to the projector, select the correct source after projection starts by pressing the Source Search button on the projector or remote control. See page 36.

Connecting an RGB Video Source

Follow these instructions to connect the projector to a video player or satellite receiver that has an RGB video output port using the VGA computer cable that came with the projector.

Before starting, make sure the projector and your DVD player or other video source are turned off.

1. Connect one end of the VGA computer cable to the Computer1 or Computer2 port on the projector.

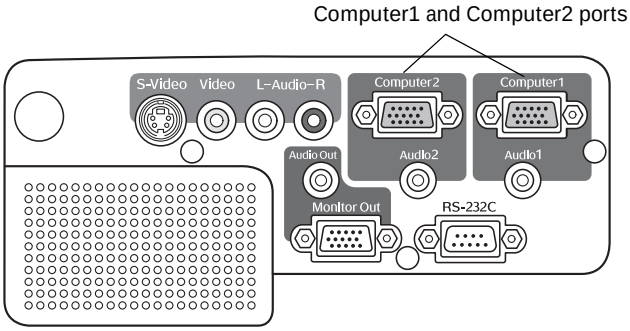

2. Connect the other end to the video port on your player.
3. To play sound through the projector, follow the instructions beginning on page 29.

If you don't need to make any other connections, you can plug in your projector and turn it on. See page 34 for instructions.

If more than one device is connected to the projector, select Computer 1 or Computer 2 as the source after projection starts by pressing the Source Search button on the projector or remote control. See page 36.

Connecting a Component Video Source

If your video source has component video connectors, you can use them to project a higher quality video image. You'll need a component-to-VGA video cable, which can be purchased from Epson (part number ELPKC19). See page 13 for ordering information.

Before starting, make sure the projector and your DVD player or other video device are turned off.

1. Connect the 15-pin VGA connector end of the component-to-VGA video cable to the projector's Computer1 or Computer2 port.

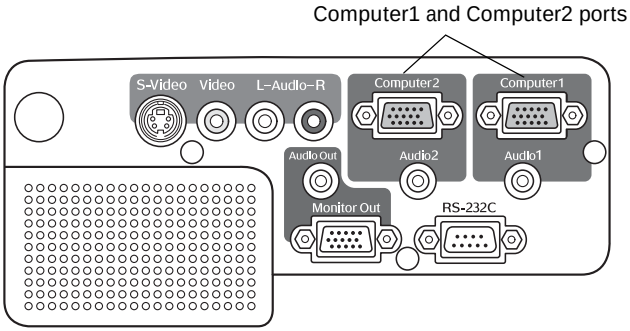

2. Insert the three component ends of the component-to-VGA video cable into the color-coded video output ports on your video source, usually labelled Y, Pb, Pr or Y, Cb, Cr.

3. To play sound through the projector, follow the instructions beginning on page 29.

If you don't need to make any other connections, you can plug in your projector and turn it on. See page 34 for instructions.

If more than one device is connected to your projector, select Computer1 or Computer2 as the source by pressing the Source Search button on the projector or the remote control. See page 36.

Playing Sound Through the Projector

The projector has a built-in speaker with a maximum output of 10 W. You can play sound from your video equipment through the projector's speaker if your video device has an audio output port.

For RCA-Type Audio Output Ports

Most video devices have an RCA-type audio output port. In this case, use a commercially available RCA-type audio cable to connect the projector to your video source:

1. Connect one end of the RCA audio cable to the L-Audio-R jacks on the projector.

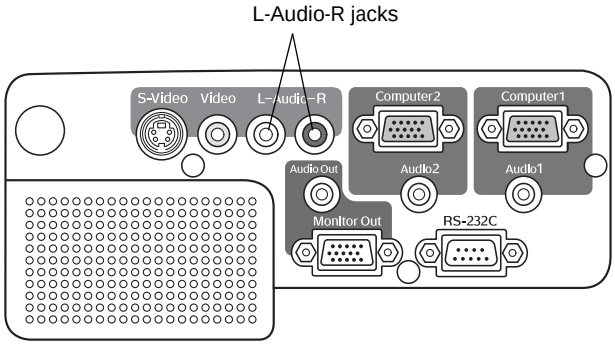

2. Connect the red and white plugs on the other end of the RCA audio cable to the corresponding color-coded audio output port on your video source.

If you don't need to make any other connections, you can plug in your projector and turn it on. See page 34 for instructions.

For Stereo Mini-Jack Audio Output Ports

Some video devices, especially camcorders, may have a stereo mini-jack audio output port. To connect to the L-Audio-R input jacks when using the S-Video or Video port, use a commercially available stereo mini-jack audio adapter cable (3.5-mm stereo miniplug to two male RCA plugs) to connect to the projector.

1. Connect one end of the audio adapter cable to the L-Audio-R jacks on the projector.

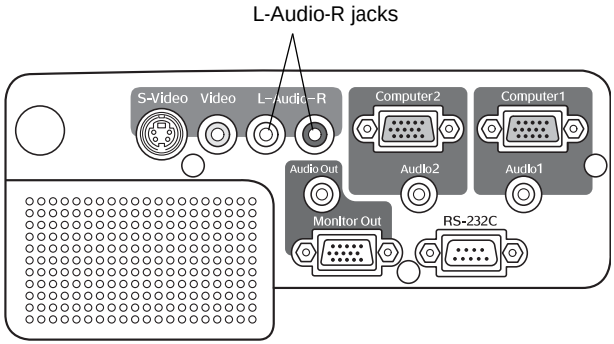

2. Connect the other end of the audio adapter cable to your video device's audio output port.

If you don't need to make any other connections, you can plug in your projector and turn it on. See page 34 for instructions.

Connecting External Speakers

You can output sound to external speakers with built-in amplifiers. When you play sound through external speakers, the projector's built-in speaker system is disabled.

1. Locate the appropriate cable to connect your speakers.

   Depending on your speakers, you may be able to use a commercially available audio cable with a stereo mini-jack connector on one end and pin jacks on the other end. For some speakers, you may have to purchase a special cable or use an adapter.

2. Connect the stereo mini-jack end of the audio cable to the Audio Out port on the projector.

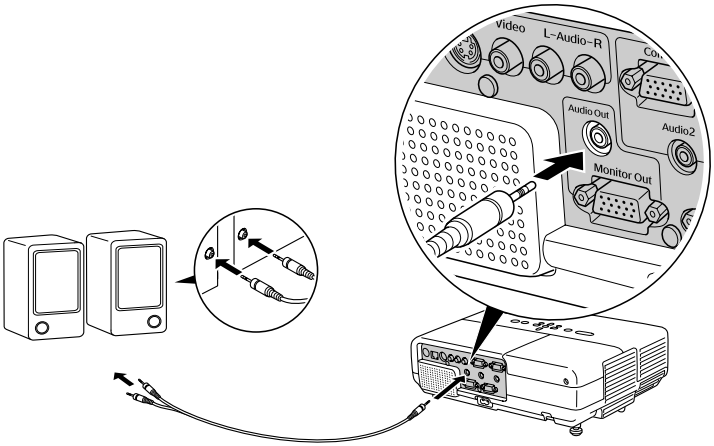

3. Connect the other end of the cable to your speakers.

When you use external speakers with the projector, you can use the 🔈 or 🔊 volume buttons on the projector or the Vol- and Vol+ buttons on the remote control to adjust the volume. First, you need to select the maximum volume on the external speakers. Then you can use the projector or remote control buttons for further adjustments.

2 Projecting

Once you've set up the projector, you're ready to turn it on, adjust the image, and give your presentation.

Although you can operate the projector without it, the remote control lets you use additional features. See Chapter 3 for instructions on using the remote. This chapter covers the following:

- Turning on the projector and other equipment
- Adjusting the image
- Adjusting the volume
- Shutting down the projector

Turning On Your Equipment

Make sure your projector and other equipment are set up and connected correctly, as described in Chapter 1. Then turn on your projector, as described below.

If you turn on your connected computer or video equipment before starting the projector, the projector automatically detects and displays the image source. If you turn on the projector first, or have multiple pieces of connected equipment, you may have to select the image source manually. See page 36.

Turning On the Projector

Follow these steps to plug in and turn on the projector:

1. Open the A/V Mute slide (lens cover).

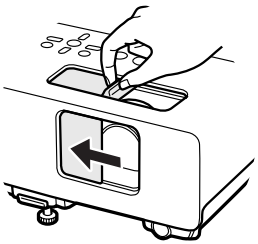

2. Connect one end of the power cord to the projector's power inlet.

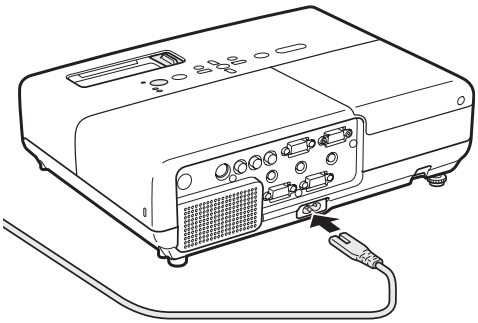

3. Connect the other end to an electrical outlet. The ⏻ Power light on top of the projector turns orange, indicating that the projector is receiving power but not yet turned on.
4. Turn on your computer or video source if you have not already.
5. Press the ⏻ Power button on the projector or on the remote control to turn it on.

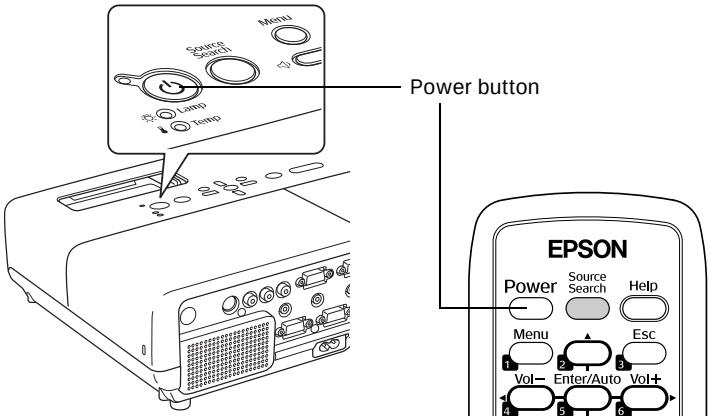

The projector beeps and the ⏻ Power light flashes green as the projector warms up. The projector lamp comes on in about 5 seconds and the ⏻ Power light stays green.

- If you're using a computer, you should see your computer display projected after a moment or two. If not, you need to select the image source. See page 36.

  (With Windows, if you see a message saying that it has found a plug-and-play monitor, click Cancel.)

- If you're projecting a video, you may need to press the Source Search button on the projector or remote control to switch to your video source. Then press the Play button on your DVD player or other device.
- If you are prompted to enter a password, see page 66.

To focus and adjust the image, see page 38. If a projected image fails to appear, see "What To Do If You See a Blank Screen" on page 36.

When you're done, shut down the projector as described on page 42.

note

If you are using the remote control for the first time, be sure to insert the batteries as described on the Quick Setup *poster.*

warning

Never look into the lens when the lamp is on. This can damage your eyes, and is especially dangerous for children.

note

The name of the selected image source appears briefly in the upper right corner of the screen.

Selecting the Image Source

Selecting the image source lets you switch between images input from different pieces of equipment connected to the projector (such as a computer and DVD player). If you don't see the image you want, press the Source Search button on the remote control or projector until the correct device image is projected. If a projected image fails to appear, see the next section for help.

Once you see your image, turn to page 38 for instructions on focusing and making other image adjustments.

What To Do If You See a Blank Screen

If you see a blank screen or a blue screen with the message No Signal after turning on your computer or video source, try the following:

- Make sure the cables are connected correctly, as described in Chapter 1.
- Make sure the ⏻ Power light is green and not flashing and the A/V Mute slide is open.
- Make sure you've selected the correct image source; see the previous section. Allow a few seconds for the projector to sync up after pressing the button.
- Check the Signal menu to make sure the correct input source is selected. See page 54.

If you're using a PC laptop:

- Hold down the Fn key and press the function key that lets you display on an external monitor. It may have an icon such as /▢ or it may be labelled CRT/LCD. Allow a few seconds for the projector to sync up after pressing it. Check your laptop's manual or online help for details.

  On most systems, the /▢ or CRT/LCD key lets you toggle between the LCD screen and the projector, or display on both at the same time.

- If you're projecting from a laptop, and you don't see the same image on the projection screen and computer screen, check your monitor settings to make sure both the LCD screen and the external monitor port are enabled.

  From the Control Panel, open the Display utility. Click the Settings tab, then click Advanced. The method for adjusting the settings varies by brand; you may need to click a Monitor tab, then make sure the external Monitor port is set as your primary display and/or enabled. See your computer's documentation or online help for details.

If you're using a Macintosh laptop with OS X:

You may need to set up your system to display on the projector screen as well as the LCD screen. Follow these steps:

1. Open System Preferences.
2. Click Display or Displays.
3. Click Detect Displays.
4. Make sure the VGA Display or Color LCD dialog box is selected.
5. Click the Arrangement or Arrange tab.
6. Make sure the Mirror Displays checkbox is selected.

Adjusting the Image

Once you see your image, you'll need to make certain adjustments:

- To focus or zoom your image, see below.
- If the image is too high or too low, you can reposition it. See page 39.
- If the image isn't square, see page 40.
- To adjust image brightness, see page 40.
- If a computer image displays incorrectly, see page 41.

You can make many other adjustments to the image—such as changing the brightness, contrast, and aspect ratio—using the projector's menu system. See Chapter 4 for more information.

Focusing and Zooming Your Image

Rotate the focus ring to sharpen the image, and the zoom ring to reduce or enlarge the image.

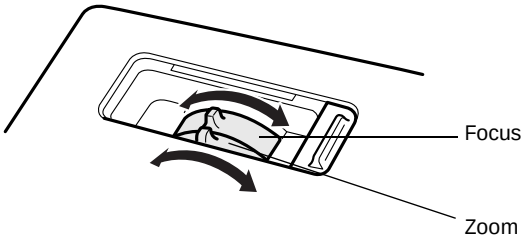

You can also change the image size by moving the projector closer to or farther away from the screen. You can use the E-Zoom buttons on the remote control to zoom in on a portion of the image. See page 47 for instructions.

Adjusting the Height of Your Image

If the image is too high or low, you can correct it by adjusting the projector's front foot.

1. Stand behind the projector. Press up on the blue foot release lever and lift the front of the projector to extend the front adjustable foot.

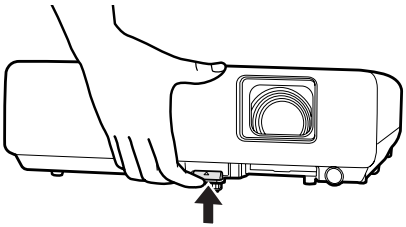

2. Once the image is positioned where you want, release the lever to lock the foot in position.

The projector automatically corrects images that are distorted when the projector is tilted up or down (up to a 30° tilt). The Keystone window appears on the screen while the projector makes the correction. If the projected image still isn't rectangular, follow the instructions in the next section.

Adjusting the Image Shape

If the projector is tilted up or down, the images that are displayed will be distorted. To correct the distortion or “keystone” shape, do one or more of the following:

- If your image looks like ▱ or ▱, you’ve placed the projector off to one side of the screen, at an angle. Move it directly in front of the center of the screen, facing the screen squarely.
- If your image looks like ▱ or ▱, you need to adjust the keystone correction value. Press the ▷◁ or ▷◁ buttons on the projector to correct the shape of the image. After correction, your image will be slightly smaller.

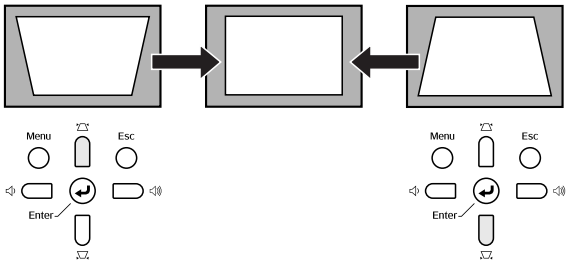

- You may need to turn on Auto Keystone. See page 56 for instructions.

You can also make keystone adjustments using the projector’s Settings menu. See page 56.

Adjusting the Brightness

The brightness of an image depends on the source you are projecting and the amount of light in the room. If the image is too bright or not bright enough, here are two ways you can adjust it:

- Change the Brightness setting in the Image menu. See page 53.
- Select Low or High for the Brightness Control option in the Settings menu. (See page 57.) Low brightness mode extends the life of the lamp and decreases the fan noise.

Correcting Computer Images

If you've connected a computer and the image doesn't look right, or it doesn't fit properly on the screen, press the Enter button on the projector or the Enter/Auto button on the remote control. This automatically resets the projector's tracking, sync, resolution, and position settings. You must be projecting a computer image for this button to have any effect. Additionally, if the Auto Setup option in the Signal menu is set to Off, the Auto function will not work. See page 55.

Adjusting the Volume

You can use the Vol- and Vol+ buttons on the remote control to increase or decrease the volume.

You can also use the buttons on the projector to control the volume. Press the 🔊 button to increase the volume, or the 🔈 button to decrease it. A volume gauge appears on the screen while the volume is being adjusted.

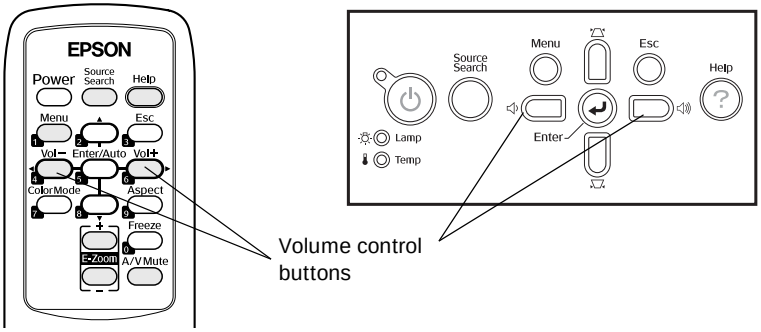

note

You can also adjust the volume using the projector's Settings menu. See page 56 for details.

You must adjust the volume separately for each input source.

Shutting Down the Projector

When you've finished using the projector, follow the recommended procedure to shut it down.

1. If you're using a computer, shut it down first; otherwise you may not be able to see your computer's display to shut it down properly.
2. To turn off the projector, press the ⏻ Power button on the projector or remote control.

   You see this confirmation message: (If you don't want to turn it off, press any other button or wait a few seconds until it disappears.)

3. Press the ⏻ Power button again. The projector beeps twice, the lamp is turned off, and the ⏻ Power light turns orange. (To turn the projector on again, press the ⏻ Power button.)

   With Epson's exclusive Instant Off® technology there's no cool-down period, so you can pack up and go immediately after turning off the projector.

4. Press up on the blue foot release lever and lower the projector to retract the front adjustable foot.
5. Close the A/V Mute slide.

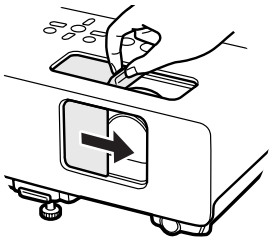

6. Unplug the power cord.
7. Turn off and disconnect any equipment plugged into the projector.
8. If you won't be using the projector for awhile, store it in a protective case.

note

When the projector has not received any input signals for 30 minutes, it automatically turns off the projector lamp and enters "sleep mode." This conserves electricity, cools the projector, and extends the life of the lamp. If you are done using the projector, unplug the power cord. If you want to start projecting again, press the ⏻ Power *button. You can turn sleep mode on or off through the Extended menu. See page 59.*

Turn off this product when not in use to prolong the life of the projector.

caution

To avoid damaging the projector or lamp, never unplug the power cord when the ⏻ Power *light is green or flashing orange.*

3 Using the Remote Control

The remote control lets you access your projector's features from anywhere in the room—up to 20 feet away. For example, you can turn the projector on and off, freeze the presentation, zoom in on a portion of your image, and access the menu system. (The projector menus let you adjust many projector settings; see Chapter 4.)

When using the remote control, stand within 20 feet of the projector. Point the remote control either at the front or back of the projector or at the screen (the projector's front sensor can detect signals bounced off the screen). Press the button for the function you want to use.

This chapter covers the following information:

- Controlling the picture and sound
- Replacing the remote control batteries

Controlling the Picture and Sound

You can use the remote control to select your source, adjust the colors, temporarily turn off the picture and sound, freeze the action, or zoom in on the picture. Make sure you have set up your projector and connected any equipment as described in Chapter 1.

Switching Between Picture Sources

If you've connected your projector to more than one computer and/or video source, you can use the Source Search button on the projector or remote control to switch between the different sources.

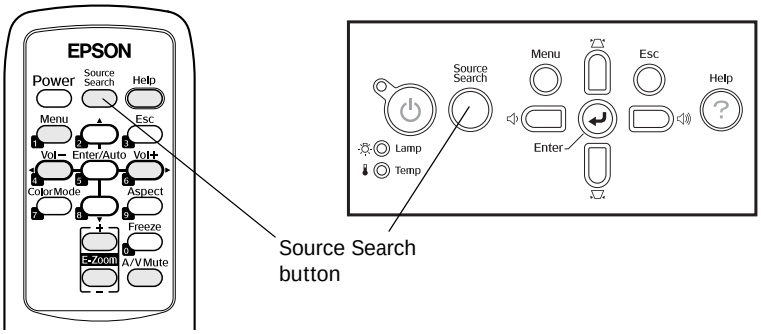

After you select a source, the screen goes dark for a moment before the image appears. The name of the selected source (such as Computer1 or S-Video) appears briefly on the screen.

Adjusting the Color Mode

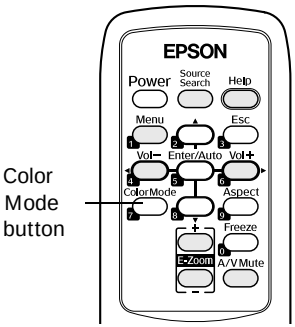

You may want to adjust the color mode to select a different setting that is appropriate for the image you're projecting and the environment in which you're projecting it. Press the Color Mode button on the remote control.

If you're projecting computer or RGB video images, the default color mode is Presentation, which is appropriate for full-color presentations in bright rooms.

The following table lists the color modes available.

Color mode	Description
Photo	Best for projecting still images with vivid color in a bright room (computer input only).
Sports	Best for watching TV in a bright room (component, S-video, or composite video input only).
Presentation	Use when you're projecting a full-color presentation in a bright room.
Text	Use when you're projecting a black and white presentation in a bright room.
Theatre	Use when projecting movies in a dark room.
Game	Brightest mode, best for playing video games in a bright room.
sRGB	Use when projecting computer images conforming to the sRGB color standard.
Blackboard	Choose this fixed color mode when you need to project against a green blackboard.

You can also use the projector menu system to change the color mode in the Image menu (see page 53).

Turning Off the Picture and Sound

Press the A/V Mute button on the remote control or use the A/V Mute slide on the projector to turn off the image and sound and darken your screen. This is useful if you want to temporarily re-direct your audience's attention without the distraction of a bright screen.

- To turn off the picture and sound, press the A/V Mute button or close the A/V Mute slide on the projector. The screen goes dark.

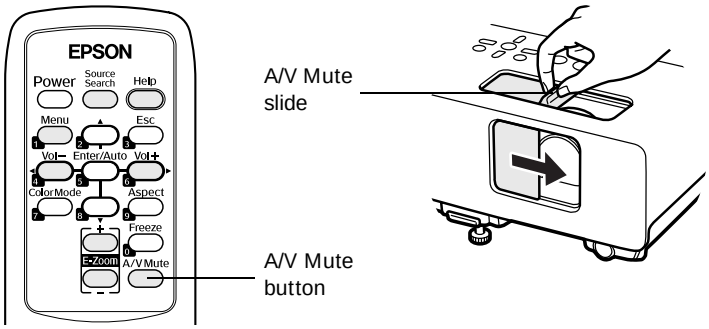

- To turn the image and sound back on, press the button again, or open the AV Mute slide.

You can create an image, such as a company logo or a picture, to display on the screen whenever you press the A/V Mute button. See page 63 for more information.

Stopping Action

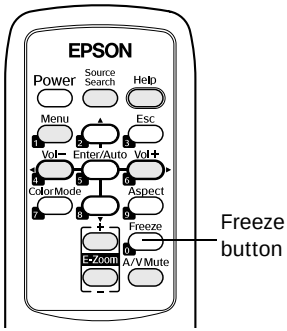

Press the Freeze button to stop the action in your video or computer image and keep the current image on the screen. The sound will continue, however. Also, because the source continues to transmit signals, you won't resume the action from the point you paused it.

To restart the action, press the Freeze button again.

Zooming Your Image

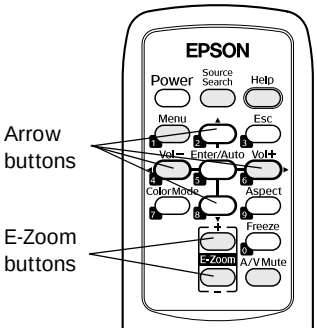

Follow these steps to zoom in on a portion of the image:

1. Press the E-Zoom + button on the remote control.

   You see a crosshair indicating the center of the zoom-in area.

2. Use the four “arrow” buttons on the remote control to position the crosshair in the area you want to enlarge.

3. Continue pressing the E-Zoom + button to enlarge the selected area up to 4 times.

4. While the image is enlarged, you can:

   - Use the arrow buttons to pan about.
   - Press the E-Zoom – button to zoom out.

5. When you’re done, press the Esc button to return to the original size.

Changing the Image’s Aspect Ratio

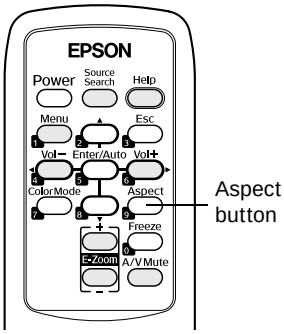

If you’re projecting a widescreen format image, you can use the Aspect button on the remote control to change the aspect (width to height) ratio from 4:3.

You can change video images to 16:9 (widescreen format), or 16:9 (Up) or 16:9 (Down) (to accommodate subtitles or supertitles).

You can change computer images to 16:9 (widescreen format) or Normal.

Press the Aspect button again to cycle through the available options.

You can also change the aspect ratio using the projector’s Signal menu. See page 54 for details.

Replacing the Batteries

The remote control uses two AA alkaline batteries. Follow these steps when you need to replace them:

1. Press in the tab to remove the battery cover.

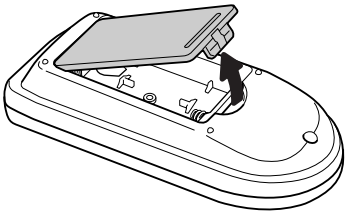

2. Remove the old batteries, then insert the new ones as shown.

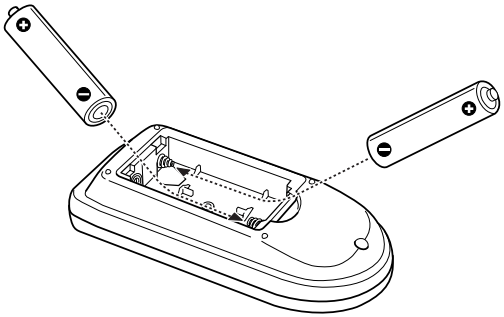

3. Replace the battery cover. (It should click into place.)

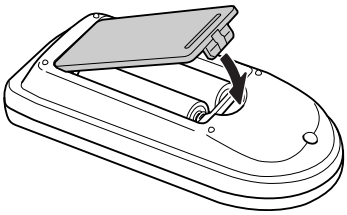

note

The remote control automatically shuts off when it detects a button being pressed more than 30 seconds. This conserves battery life. It can be helpful, for example, when the remote is in a carrying case and the ⏻ Power *button is accidentally pushed.*

caution

When replacing batteries, take the following precautions:

- *Replace the batteries as soon as they run out. If a battery leaks, wipe away battery fluid with a soft cloth. If fluid gets on your hands, wash them immediately.*
- *Do not expose batteries to heat or flame.*
- *Dispose of used batteries according to local regulations.*
- *Remove the batteries if you won't be using the remote control for a long period of time.*

4 Fine-tuning the Projector

You can use the Menu button on the projector or remote control to access on-screen menus to adjust the image, sound, and other features. This chapter covers the following information:

- Using the menu system
- Adjusting image colors and clarity
- Adjusting the input signal
- Customizing projector features
- Selecting projector setup options
- Viewing lamp usage and other information
- Using the projector's security features
- Restoring the default settings

Using the Projector's Menu System

The projector menus let you adjust and customize the projector features:

- The Image menu lets you modify the colors of the projected image and fine-tune brightness, contrast, and sharpness. See page 52.
- The Signal menu lets you make adjustments to the input signal. You can select your input source, change the image position and aspect ratio, and adjust tracking and sync for computer images. See page 54.
- The Settings menu lets you customize the way you use the projector. It allows you to adjust the volume and keystone correction, set lamp brightness to high or low, control use of the remote control receivers, project a test pattern for adjustments, and disable buttons on the projector while you are projecting. See page 56.
- The Extended menu lets you customize the way you set up the projector. Among the options, you can select the menu language, set rear or ceiling projection, turn closed captions on or off, and record a custom image or logo to be displayed as the startup screen or whenever you press the A/V Mute button on the remote control. See page 58 and page 61.
- The Info menu provides information about lamp status and computer or video settings. See page 60.
- The Reset menu lets you restore the projector's factory default settings. See page 68.

Changing Menu Settings

Use the buttons on the remote control or on the projector to access the menus and change settings. Follow these steps:

1. Press the Menu button on the remote control or projector to display the menu screen:

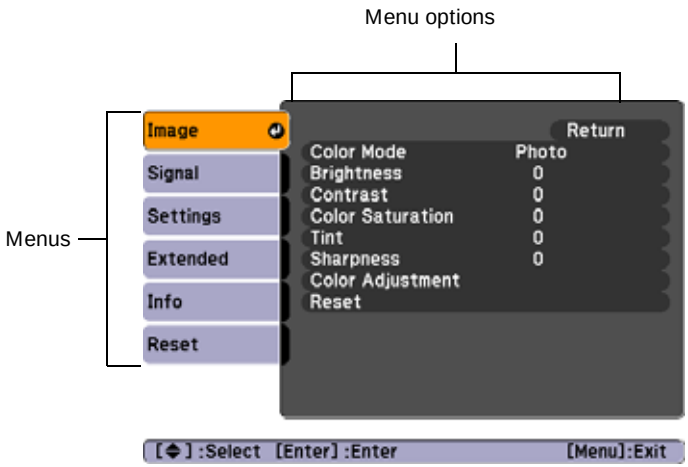

   The menus are listed on the left, and the options available for the highlighted menu are shown on the right.

2. Use the up and down arrow buttons on the projector or remote control to scroll through the menu list. When you've highlighted the desired menu, press the Enter button on the projector or the remote control to select it.

   The highlight moves to the first option for that menu.

3. Use the up and down arrow buttons on the projector or remote control to scroll through the list of options. (The options available depend on which source is selected.)

4. After highlighting the option you want to adjust, use the left or right arrow buttons on the projector or the remote control to change the setting. In some cases, you may have to press the Enter button to see a sub-screen for changing the setting.

Press the left or right arrow buttons on the projector or the remote control to adjust a slider bar.

To select from two or more settings, use the up or down arrow buttons on the projector or the remote control to highlight the desired setting, then press Enter.

5. Press the Esc button to return to the previous menu or to close the menu system if you are at the main menu. Your changes are saved automatically.
6. Press the Menu button to exit the menu system.

Adjusting Colors and Clarity

The Image menu lets you make adjustments to the colors of the projected image and fine-tune brightness, contrast, and sharpness. The options available depend on which image source is selected:

Computer (analog-RGB) and RGB video

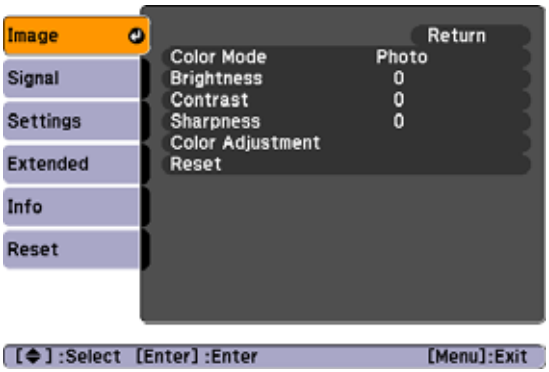

Component, composite, and S-Video

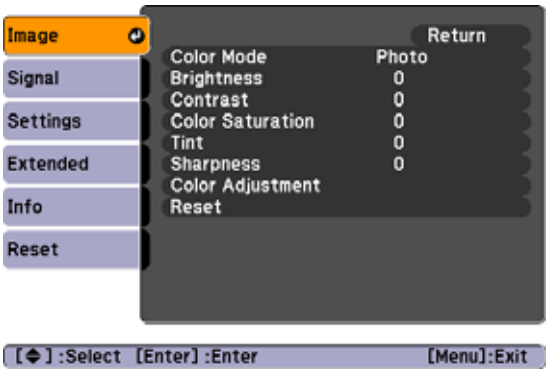

Follow these steps to adjust the appearance of your image:

1. Press the Menu button. You see the main menu.
2. Press Enter to select the Image menu.
3. Use the up and down arrow buttons and press Enter to set the following options:

   - Color Mode
     Corrects the vividness of image color. You can select from the following settings, and save a different one for each computer and/or video source:

     Photo: For projecting still images with vivid color in a bright room (Computer input only).

     Sports: For watching TV in a bright room (component, S-Video, or composite video input only).

     Presentation: For color presentations in a bright room.

     Text: For black and white presentations in a bright room.

     Theatre: For optimizing movie images with natural color in a dark room (the default for video or S-Video display).

     Game: Brightest mode, for playing video games in a bright room.

     sRGB: For standard sRGB computer displays (the default when projecting from a computer with analog video).

     Blackboard: Fixed color mode for projecting against a green blackboard.
   - Brightness
     Lightens or darkens the overall image.
   - Contrast
     Adjusts the difference between light and dark areas.
   - Color Saturation (component, composite, and S-Video)
     Adjusts the depth or intensity of the image colors.

note

You can also select High *or* Low *brightness mode in the Settings menu. See page 57.*

- Tint (component, composite, and S-Video)
  Adjusts the balance of green to magenta in the image.
- Sharpness
  Sharpens or softens the image.
- Color Adjustment
  Adjusts the temperature and intensity of red, green, and blue.

4. When the image is set correctly, press Esc or Menu. Your settings are automatically saved.

Adjusting the Input Signal

Although the projector normally detects and optimizes the input signal automatically, you can use the Signal menu to manually select it. You can also change the position of the projected image, correct tracking and sync, and change the aspect ratio to widescreen format.

1. Press the Menu button. You see the Image menu.
2. Select the Signal menu. You see one of the following screens:

Computer (analog-RGB) and RGB video

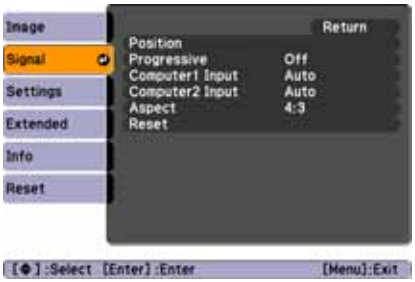

Component video

Composite video and S-Video

3. Press Enter. Then use the up and down arrow buttons and the Enter button to set the following options:

   - Auto Setup (computer images)
     Leave this setting On to automatically optimize the computer image. Turn it off if you want to save adjustments you have made to the video settings.
   - Tracking (computer images)
     Removes unwanted vertical lines from a computer image by matching the projector's internal clock to various computer signals. See page 84 for more information.
   - Sync (computer images)
     Corrects fuzziness or screen flicker by synchronizing the projector with the tracking signal sent from the computer. See page 84 for more information.
   - Position (computer images)
     Use the arrow buttons to move the image on the screen left, right, up, or down.
   - Progressive
     Leave this setting On when viewing S-Video or composite video so that interlaced-to-progressive conversion is carried out (best for fast-moving pictures). If you notice flickering while viewing still images, switch this setting to Off.
   - Computer Input (1 or 2)
     Selects the signal from equipment connected to the Computer1 or Computer2 ports. If your image colors look wrong, try changing this setting from Auto to one of the following: RGB for computer or RGB video sources, or Component Video for component video sources.

note

If you have repositioned the image but then change your mind, you can press the Enter/Auto *button on the remote control to restore the default settings.*

- Video Signal (composite and S-Video)
  Leave this setting at Auto unless you are using a 60-Hz PAL system (select PAL60).
- Aspect
  Sets the image's aspect ratio (ratio of width to height). Select 4:3 for Normal for computer content, 4:3 for letterbox video content, 16:9 for widescreen content, or 16:9 (Up) or 16:9 (Down) for video content with subtitles or supertitles.

4. When you're finished, press Esc or Menu.

Customizing Projector Features

The Settings menu lets you customize the way you use the projector, from adjusting volume and lamp brightness to applying security controls.

1. Press the Menu button.
2. Select the Settings menu.

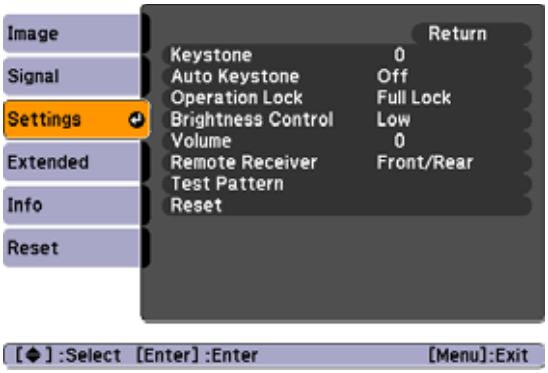

3. Press Enter. Then use the up and down arrow buttons and the Enter button to set the following options:

   - Keystone
     Adjusts a distorted image from a trapezoid shape to rectangular.
   - Auto Keystone
     Automatically adjusts a distorted image from a trapezoid shape to rectangular when the projector's foot is extended or retracted. (Not available when you're projecting from the ceiling or using rear projection.) Select On or Off.
   - Operation Lock
     Disables all projector buttons (Full Lock) or all the buttons except the ⏻ Power button (Operation Lock). You can still operate the projector from the remote control. Changes to this setting take effect after you restart the projector. (After you turn off the projector, wait for the ⏻ Power light to turn a steady orange before turning it on again.)
   - Brightness Control
     Select Low lamp brightness when the projection is too bright for the room. The Low setting also reduces electricity consumption and fan noise. Select High to project the maximum brightness. (Also check the Brightness setting in the Image menu; see page 53.)
   - Volume
     Adjusts the volume.
   - Remote Receiver
     Deactivates the projector's front and/or back sensors that detect signals from the remote control. This may be necessary to prevent interference from bright fluorescent lights.
   - Test Pattern
     Displays a test pattern to assist you in focusing and zooming the image, and correcting the image shape. (To cancel the displayed test pattern, press Esc.)

4. When you're finished, press Esc or Menu.

note

To cancel the Operation Lock function from the projector, press the Enter *button for about seven seconds.*

Selecting Projector Setup Options

Use the Extended menu to customize the way you set up the projector. You can configure the projector for rear and/or ceiling projection, change the language for the menus and messages, set the screen background color, capture and store a custom image or logo for the startup screen.

1. Press the Menu button.
2. Select the Extended menu.

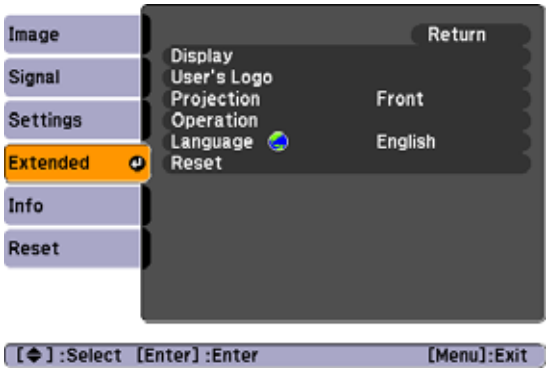

3. Press Enter. Then use the up and down arrow buttons and the Enter button to set the following options:

   - Display

     Messages: Lets you turn screen messages on or off.

     Display Background: Sets the screen background to Black, Blue, or Logo when no image signal is available.

     Startup Screen: Enables or disables display of the startup screen when the projector is turned on.

     A/V Mute: Sets the screen background to Black, Blue, or Logo when the A/V Mute button is pressed.

     Closed Caption: Enables or disables closed captions. Select CC1, CC2, or OFF. The captions are not visible when the menu is displayed.

- User's Logo
  Turn on to display the image or logo you have captured whenever the projector is turned on. See page 63 for more information.

note
Logo settings cannot be changed if the User's Logo Protect feature has been turned on. See page 64.

- Projection

  Front: Projector is in front of the screen.

  Front/Ceiling: Projector is in front of the screen, mounted upside-down from the ceiling.

  Rear: Projector is behind the screen.

  Rear/Ceiling: Projector is behind the screen, mounted upside-down from the ceiling.

  To change from Front to Front/Ceiling or Rear to Rear/Ceiling, press and hold the A/V Mute button on the remote control for five seconds.

- Operation

  Direct Power On: When this feature is enabled, projection starts as soon as you plug in the power cord. You don't have to press the ⏻ Power button.

  Sleep Mode: When enabled, the projector turns off the lamp if it has not received any input signals for a period of time (as defined in the Sleep Mode Time setting).

  Sleep Mode Time: When Sleep Mode is on, you can set the period of time before the projector turns off automatically, from 1 to 30 minutes.

  Lens Cover Timer: This feature is enabled by default to turn the power off automatically when the A/V Mute slide is closed for more than 30 minutes.

  High Altitude Mode: When using the projector at an altitude above 4,921 feet (1,500 meters), turn this setting on to ensure that the internal temperature of the projector is regulated properly. Turn this setting off for lower elevations.

note
When Direct Power On *is turned on, press the* ⏻ Power *button to turn the projector off, wait until the* ⏻ Power *light turns a steady orange, then unplug the power cord.*

- Language
  Select the language to be used for the projector menus.

4. When you're finished, press Esc or Menu.

note
You can make changes to many of the signal settings on the Signal menu. See page 54 for details.

Viewing Lamp Usage and Other Information

Use the Info menu to view information about the display settings of your computer and the number of hours the lamp has been used.

1. Press the Menu button.
2. Select the Info menu. You see one of the following menus:

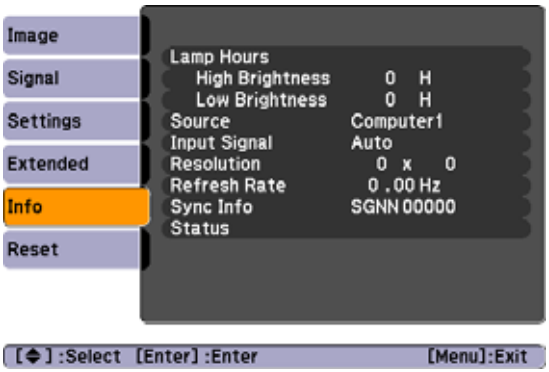

Computer (analog RGB, digital RGB, RGB Video/Component video)

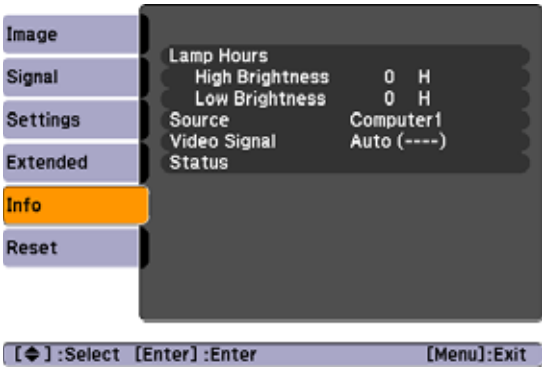

Video (Composite video, S-Video)

note
The lamp usage timer doesn't register until you've used the lamp for at least 10 hours.

- Lamp Hours
  Displays the number of hours the lamp has been used. The life span of the lamp ranges from about 3000 hours in High brightness mode to about 4000 hours in Low brightness mode. If the number shown is close to 3000 or the information is displayed in red, make sure you have a spare lamp handy.
- Source
  Displays the input source currently being projected.
- Input Signal (computer, RGB video, and component video)
  Displays the input signal setting.
- Resolution (computer, RGB video, and component video)
  Displays the input resolution.
- Video Signal (composite and S-Video)
  Displays the video signal format.

- Refresh Rate (computer, RGB video, and component video)
  Displays the refresh rate.
- Sync Info (computer, RGB video, and component video)
  Provides information that may be needed by the service technician.
- Status
  Displays informations about projector problems. This information may be needed if service is required.

3. When you're finished, press Esc or Menu.

Using the Projector's Security Features

To prevent unauthorized use of the projector, you can do the following:

- Create an identifying user logo that is displayed at startup and/or when the A/V Mute button is pressed.
- Assign a password to prevent the projector from being turned on, and prevent your startup screen from being changed.
- Disable the projector's buttons; this is useful, for example, if you're projecting in a classroom and you want to ensure that no one touches the projector's buttons while you're using the remote control.
- Install an anti-theft lock.

If you create a user's logo for the projector, you can lock the logo on so it is displayed as the startup screen and/or AV/Mute screen. Unauthorized users cannot turn it off or change it. This feature is intended to discourage theft and provides a way to identify the projector should it be stolen.

If you assign the projector a password, a screen appears requesting the password whenever the projector is turned on. If you enter the password incorrectly three times in succession, the projector's operation is locked and you'll need to disconnect the power cord, then reconnect it to redisplay the password screen. If an incorrect password is entered 30 times in a row, the projector is locked and you'll need to contact Epson to unlock it. See "Where To Get Help" on page 87.

note

If you should happen to enable the password before you set one and you see the prompt to enter the password, enter the default password 0000 *to proceed.*

If someone else will be using the projector for awhile but you want to make sure that person returns it by a certain time, you can temporarily disable the password for a set period. When that time has elapsed, the password is reactivated and must be entered before the projector can be used.

When you enable the Operation Lock feature, all of the projector's buttons (Full Lock) or all of the buttons except the ⏻ Power button (Operation Lock) are disabled.

Creating Your Own Screen Logo

You can transfer any image on your computer to the projector, and then use it as the startup screen and/or the screen that is displayed when you press the A/V Mute button. The image can be a company logo, slogan, photograph, or any other image you want to use. The projector considers this image the "User's Logo."

Follow these steps to capture the image and transfer it to the projector:

1. Display the image you want to use on the projector. You can use an image from a computer or video source, such as a DVD player.
2. Press the Menu button and select the Extended menu.

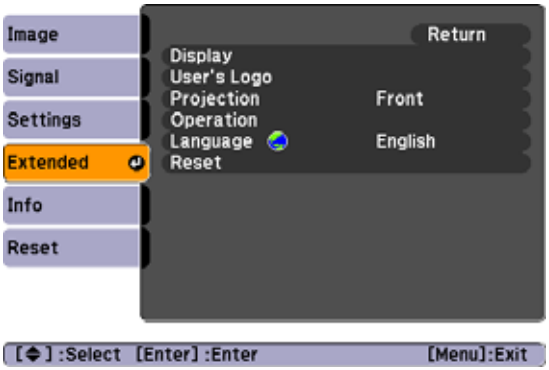

3. Use the down arrow button and press Enter to select User's Logo.
4. When you see a message asking if you want to use the present image as a user's logo, select Yes and press Enter. A selection box displays over the image.
5. Use the arrow buttons on the projector or remote control to select the area of the image you want to use. Once you have selected the area, press Enter.
6. When you see the message Choose this image as the User's Logo?, choose Yes and press Enter. If you want to change the area selected, select No, press Enter and repeat steps 5 and 6.

note

If the User's Logo Protect function is ON, *you see a message that the logo cannot be recorded. You'll need to disable the User's Logo Protect function before you can create or change the User's Logo. See page 65.*

7. When you see this screen, select a zoom rate (display size), and then press Enter.

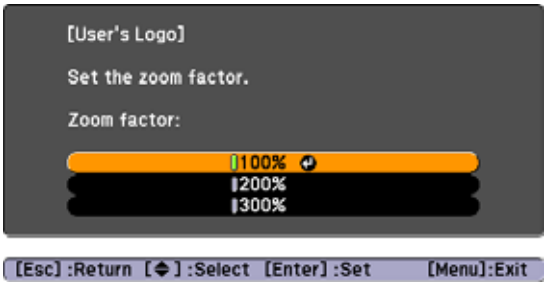

8. When you see the message Save image as user's logo?, select Yes and press Enter. Saving the logo takes a few moments. Do not use the projector or other sources (computer, video, etc.) while the logo is being saved. When you see the message Completed, press Esc.

9. To display the logo as the background screen when you press the A/V Mute button or when no image signal is available, select the Extended menu and press Enter. Then select Display, Display Background, and Logo and press Enter. Select A/V Mute and Logo and press Enter.

10. When you're finished, press Menu to exit the menus.

note

The default setting for the Startup Screen *option menu is* On. *If the* Startup Screen *is set to* Off, *the logo will not display at startup.*

If the User's Logo Protect function has been set to On, *the* Display Background *setting cannot be changed. You need to turn the protect function off first. See page 65 for details.*

Once you've saved a user's logo, you cannot reset the logo setting to its factory default (no logo).

Setting a Password

1. Press the Freeze button on the remote control for about five seconds until you see the Password Protect menu:

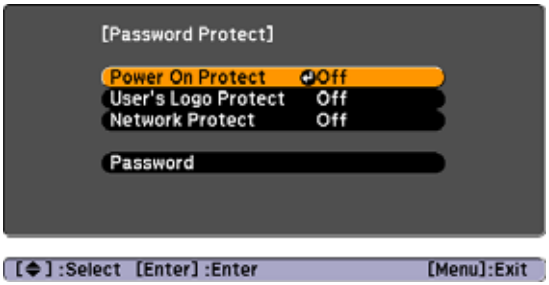

2. Select Password and press Enter.

note

If a password has already been set, you see the Password Protect Release screen. See "Starting the Projector with a Password" on page 66.

3. When you see the message Change the password?, select Yes and press Enter.

4. Enter a 4-digit number using the numeric buttons on the remote control, as shown.

   The password will be displayed as ****. After you enter the last digit, a confirmation screen appears. Enter the password again. You see the message Password accepted.

5. After you finish setting the password, press the Esc button to return to the Password Protect menu.

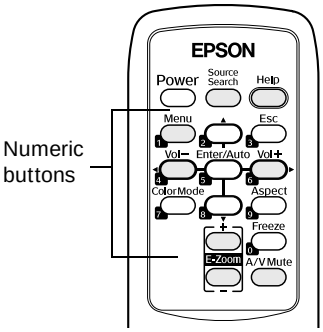

Make a note of the password and keep it in a safe place in case you forget it.

Turning On the Password and User's Logo

1. Press the Freeze button on the remote control for about five seconds until you see the Password Protect menu.

2. To enable the password, select Power On Protect and press Enter. Select On then press Esc.

3. To enable your screen logo, select User's Logo Protect and press Enter. Select On then press Esc.

   When this feature is on the logo appears whenever the projector is turned on (if the Startup Screen is enabled in the Extended menu; see page 58) and as the A/V Mute screen (if you selected the Logo as the Display Background in the Extended menu). None of the User's Logo features can be changed when the User's Logo Protect function is enabled.

4. Press Menu to close the Password Protect menu.

If you lose the remote control, you will not be able to enter the password, so keep the remote control in a safe place at all times.

You can attach the password protect sticker to the projector as an additional theft deterrent.

Starting the Projector with a Password

When the password function is enabled, you see this screen when you turn on the projector:

Use the numeric buttons on the remote control to enter the password. Once you have entered the password correctly, the password screen closes, and projection begins.

If the password is not correct, you see the message Wrong password. Please try again. If you enter an incorrect password three times in succession, you see the message The projector's operation will be locked. Request code xxxxx and the projector switches to standby mode for approximately 5 minutes. Write down the request code. Then disconnect the projector's power cord from the electrical outlet, reconnect it, and turn the projector back on.

When you see the Password Protect Release screen again, you can try to enter the correct password.

If you enter an incorrect password 30 times in succession, the projector remains locked and you must contact Epson for service.

If you have forgotten the password, contact Epson with the request code number that appears in the Password Protect Release screen for assistance. See "Where To Get Help" on page 87.

Disabling the Projector's Buttons

You can use the Operation Lock function to disable all the projector's buttons, or all the buttons except for the ⏻ Power button.

1. Press the Menu button.
2. Select the Settings menu and press Enter.
3. Use the up and down arrow buttons to select Operation Lock and press the Enter button.
4. Select Full Lock to disable all the buttons, or Operation Lock to disable all except the ⏻ Power button. Then press Enter.
5. Select Yes and press Enter to confirm the setting.
6. Press the Menu button.

note

To cancel Operation Lock, press the projector's Enter *button for 7 seconds.*

Installing Security Locks

You can install two different types of security locks on the projector:

- You can use the security slot on the base of the projector to install a Kensington Microsaver Security System. See page 13.
- You can use a wire lock to secure the projector to a room fixture or heavy furniture, as shown below:

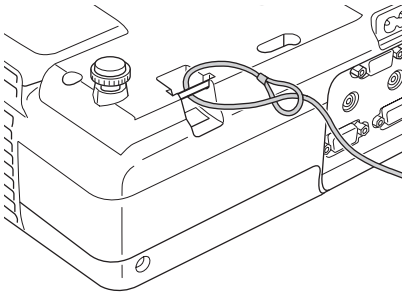

Restoring the Default Settings

note

The Computer Input (1 and 2), User's Logo, Lamp Hours, and Language settings do not return to their defaults when you select Reset All. *To reset the computer inputs, use the* Reset *option on the Signal menu; see page 54 for details. To reset the Language settings, use the* Reset *option on the Extended menu; see page 58 for details.*

The Reset menu lets you return most projector menu settings to their default values. It also lets you reset the lamp hours to their initial default value; see page 75 for instructions on resetting the lamp timer.

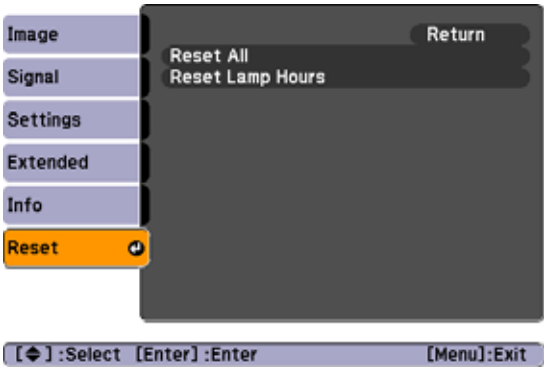

To reset most projector menu settings, select Reset All and press the Enter button to display the confirmation screen. Select Yes to reset all the default settings or No to cancel.

5 Maintenance and Transportation

Your projector needs little maintenance. All you need to do on a regular basis is keep the lens clean. Any dirt or smears on the lens may show up on your projected image.

You may need to clean the air filter and air vents. A clogged air filter or air vent can block ventilation needed to cool the projector and cause overheating.

The only parts you should replace are the lamp and air filter. If any other part needs replacing, contact your dealer or a qualified servicer.

This chapter covers the following:

- Cleaning the lens
- Cleaning the projector case
- Cleaning and replacing the air filter
- Replacing the lamp
- Resetting the lamp timer
- Transporting the projector

warning

Before you clean any part of the projector, turn it off and unplug the power cord. Never open any cover on the projector, except the lamp and filter covers. Dangerous electrical voltages in the projector can injure you severely. Do not try to service this product yourself, except as specifically explained in this User's Guide. *Refer all other servicing to qualified service personnel.*

Cleaning the Lens

caution
Do not use glass cleaner to clean the lens.

Clean the lens whenever you notice dirt or dust on the surface.

To remove dirt or smears on the lens, use a commercially available cloth for cleaning glasses.

Cleaning the Projector Case

Before you clean the case, first turn off the projector and unplug the power cord.

- To remove dirt or dust, wipe the case with a soft, dry, lint-free cloth.
- To remove stubborn dirt or stains, moisten a soft cloth with water and a mild detergent. Then wipe the case.
- Do not use wax, alcohol, benzene, paint thinner, or other chemical detergents. These can damage the case.

Cleaning and Replacing the Air Filter

Your projector includes an air filter to ensure the best performance. If dust collects on the air filter or vent on the bottom of the projector, clean them as described below. Dust clogs prevent proper ventilation and can cause overheating and damage the projector.

When the filter and vent are clogged, the projector displays the message The projector is overheating. Make sure nothing is blocking the air vent, and clean or replace the air filter.

To clean the air filter and air vent, follow these steps:

1. Turn off the projector, allow it to cool down, and unplug the power cord.

2. To clean the filter and vent, Epson recommends using a small vacuum cleaner designed for computers and other office equipment. If you don't have one, gently clean them using a very soft brush (such as an artist's paintbrush).

   You can remove the air filter to clean both sides.

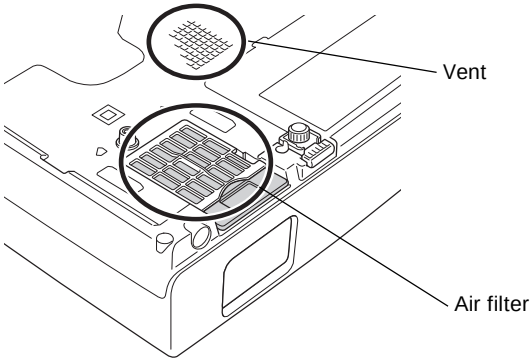

   If the dirt is difficult to remove or if the filter is torn, replace it. Contact your dealer or call Epson at (800) 463-7766 to obtain a new one (part number V13H134A13).

3. If you need to clean or replace the filter, slide it off, as shown.

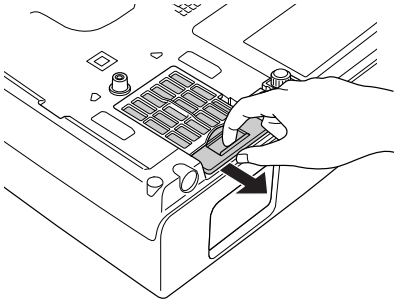

note
Air filters contain polycarbonate, ABS resin, and polyurethane foam. Dispose of used air filters according to local regulations.

4. Align the new filter and slide it in until it clicks into place.

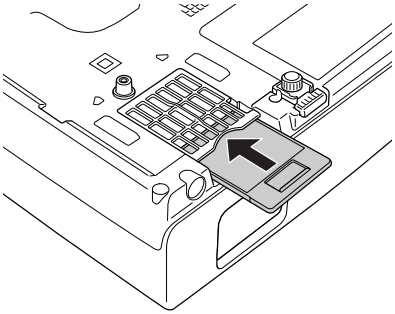

Replacing the Lamp

note
You can check to see how many hours the lamp has been used. See page 60.

Turn off this product when not in use to prolong the life of the projector.

The projection lamp typically lasts for about 3000 hours of use (in high brightness mode) or 4000 hours (in low brightness mode). It is time to replace the lamp when:

- The projected image gets darker or starts to deteriorate.
- The ☼ lamp light is flashing orange.
- The message Replace the Lamp appears on the screen when the lamp comes on. To maintain projector brightness and image quality, replace the lamp as soon as possible.

Contact your dealer or call Epson at (800) 463-7766 for a replacement lamp. Request part number V13H010L42.

warning
Let the lamp cool before replacing it. If the lamp breaks, handle the shards carefully to avoid injury.

Follow these steps to replace the lamp:

1. Press the ⏻ Power button twice to turn off the projector. When you hear the projector beep twice, unplug the power cord.
2. If the projector has been on, allow it to cool down for at least an hour (or until the lamp is cool).

3. Use the screwdriver included with the replacement lamp or a #2 Phillips-head screwdriver to loosen the screw holding the lamp cover (the lamp cover is located on top of the projector).

4. Slide the cover out, then lift it off.

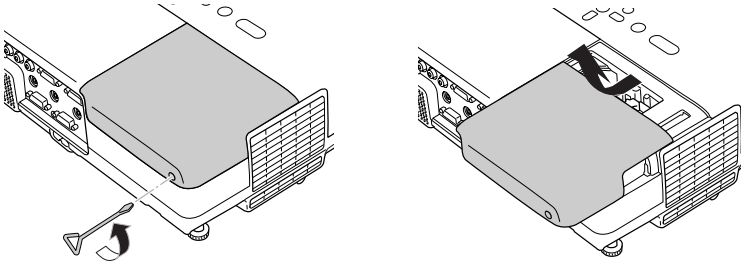

5. Use the screwdriver to loosen the two screws holding the lamp in place. (You can't remove the screws.)

6. Hold the lamp as shown and pull it straight out.

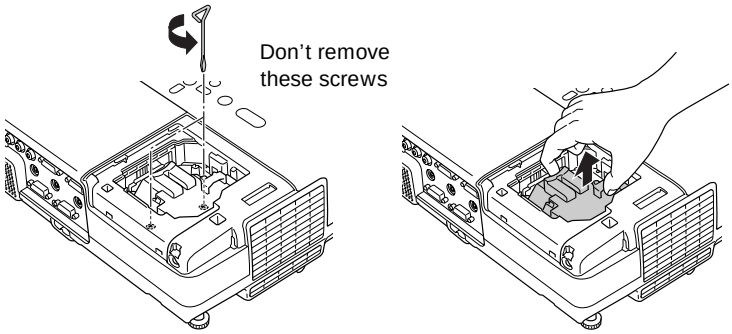

note

(Hg) The lamp(s) in this product contain mercury. Please consult your state and local regulations regarding disposal or recycling. Do not put in the trash.

caution

Do not touch the glass portion of the lamp assembly. Touching the glass could result in premature lamp failure.

7. Gently insert the new lamp along the guide rail. If it doesn't fit easily, make sure it's facing the correct way. Push the lamp down firmly where the label PUSH appears.
8. Once the lamp is fully inserted, tighten its screws.

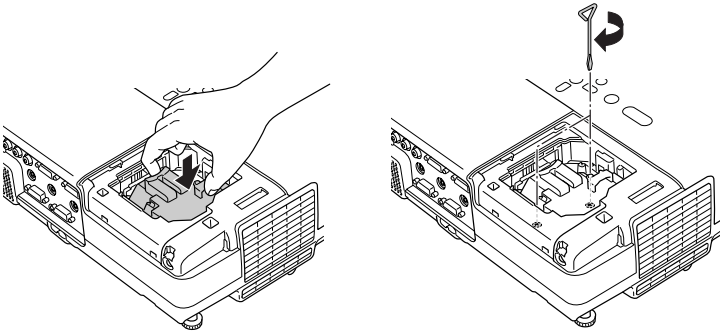

note

Be sure to seat the lamp fully and secure the lamp cover. If the lamp is not properly installed or the cover is loose, the lamp will not turn on.

9. Lower the lamp cover into place. (The opening should be almost covered, and the top of the cover should be flush with the top of the projector.) Then slide the cover closed and tighten the screw.

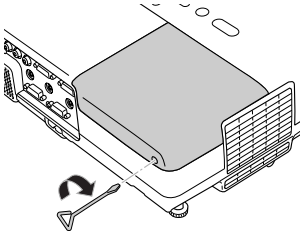

10. Reset the lamp timer as described in the next section.

Resetting the Lamp Timer

You must reset the lamp timer after replacing the lamp to clear the Replace the Lamp warning message. Follow these steps:

1. Connect the power cable and turn on the projector.
2. Press the Menu button on the remote control or projector and select the Reset menu. Then press Enter.

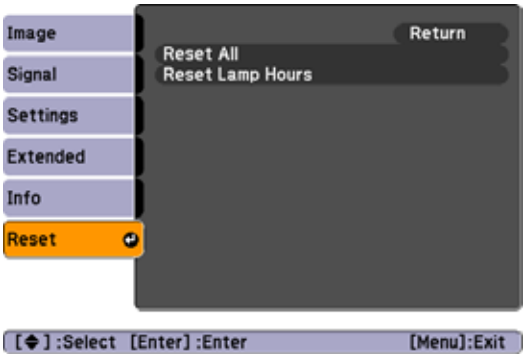

3. Select Reset Lamp Hours and press Enter. You see a confirmation screen.
4. Select Yes and press Enter.
5. Press Esc to return to the main menu or the Menu button to exit the menu system.

note

Do not reset the lamp timer if you have not replaced the lamp. If you do, the Lamp Hours will not accurately reflect the number of hours that the lamp has been used.

Transporting the Projector

The projector contains many glass and precision parts. If you need to transport it, please follow these packing guidelines to prevent damage to the projector:

- When shipping the projector for repairs, use the original packaging material if possible. If you do not have the original packaging, use equivalent materials, placing plenty of cushioning around the projector.
- When transporting the projector as freight or checked luggage, first put it in a carrying case, then pack it in a firm box, using cushioning around the case.
- When you are hand-carrying the projector, be sure to use a carrying case.

note

Epson shall not be liable for any damage incurred during transportation.

6 Solving Problems

This chapter helps you solve problems with your projector, and tells you how to contact technical support for problems you can't solve yourself. This chapter explains the following:

- Using the projector's on-screen help system
- What to do when the projector's status lights flash
- Solving problems with the image or sound
- Solving password problems
- Solving problems with the remote control
- Contacting technical support

Using On-Screen Help

If the image doesn't look right or your audio isn't working, you can get help by pressing the ? Help button on the projector or remote control.

1. Press the ? Help button on the remote control or projector. You see the Help menu.
2. Use the up and down arrow buttons on the projector or remote control to highlight the problem you want to solve. Then press the Enter button to view the solution(s).
3. Press Esc to view another topic or press ? Help to exit.

If none of the suggestions solves your problem, see additional solutions to problems in the following sections.

What To Do When the Lights Flash

The lights on top of the projector indicate the projector's status and let you know when a problem occurs.

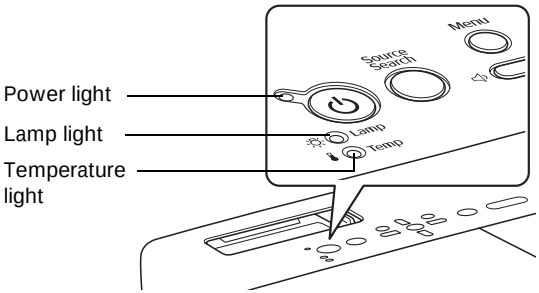

If the projector is not working correctly, first turn it off and unplug it. Then plug the power cord back in and turn on the projector. If this does not solve the problem, check the status lights on top of the projector and try the solutions recommended in the following table.

Power light	Lamp light	Temperature light	Description
Green	Off	Off	The projector is operating normally.
Flashing green	Off	Off	The projector is warming up. Wait for the image to appear.
Orange	Off	Off	The projector is in standby or sleep mode. You can unplug it or press the ⏻ Power button to turn it on.
Flashing orange	Off	Off	The projector is shutting down. Wait for the light to stop flashing and remain orange before unplugging it.
Red	Off	Flashing orange	The projector is too hot. Make sure the temperature surrounding the projector does not exceed 95 °F (35 °C) and there is plenty of space around and under the projector for ventilation. Clean the air filter and air vents, if necessary. See page 70 for instructions.
Red	Off	Red	The projector has overheated and turned itself off. Let it cool for about five minutes, then turn it back on. Make sure there is plenty of space around and under the projector for ventilation. If you are using the projector at an altitude above 4921 ft (1500 m), turn on High Altitude Mode as the Operation setting in the Extended menu; see page 58. Also clean the air filter and air vents; see page 70. If it continues to overheat, you may need to replace the air filter.
Red	Flashing red	Off	The lamp is burned out, broken, or not installed correctly; or the lamp cover is open. Close the cover or replace or reseat the lamp, if necessary, as described on page 72. Also clean the air filter and air vents; see page 70. If these suggestions don't work, contact Epson.
Orange	Flashing orange	Off	Replace the lamp with a new one as soon as possible; see page 72 for instructions. If you continue to use the lamp, there is a risk it may break.
Red	Off	Flashing red	There is a problem with the fan or a sensor. Clean the air filter and air vents; see page 70. If this does not solve the problem, turn the projector off and unplug it. Contact Epson for help; see page 87.
Red	Red	Red	There is an internal error in the projector. Turn the projector off and unplug it. Contact Epson for help; see page 87.

Solving Problems with the Image or Sound

No image appears on the screen.

- Check that the ⏻ Power light is green, not flashing, and the A/V Mute slide is open. Also press the A/V Mute button on the remote control to see if the picture was turned off temporarily.
- If the projector doesn't turn on, the Operation Lock may be enabled. Press and hold the Enter button on the projector for 7 seconds to release the lock.
- The projector may be in standby or sleep mode. If the projector has not received any signal for 30 minutes, it turns off the lamp to conserve the lamp life and save energy. If the ⏻ Power light is orange, press the ⏻ Power button to turn on the projector.

  The attached computer may also be in sleep mode or displaying a black screen saver. Try pressing a key on the computer.
- If the power was switched off and then on again, wait until the ⏻ Power light stops flashing and remains orange. Then press the ⏻ Power button again.
- Check the Video Signal, Computer1 Input, or Computer2 Input setting in the Signal menu to make sure it is correct for the selected source. See page 54 for more information.
- Messages may have been turned off in the Display setting of the Extended menu. See page 58 for details.
- Adjust the Brightness setting on the Image menu (see page 53) or select High for the Brightness Control setting in the Settings menu (see page 57).
- With Direct Power On enabled in the Operation setting of the Extended menu, if you unplug the projector and then plug it right back in, you must press the ⏻ Power button to turn on the projector. See page 58 for details.
- Make sure at least one of the projector's remote receivers are turned on in the Settings menu. See page 56 for details.

Nothing appears on the external monitor.

- Make sure the VGA computer cable is connected to your computer's video port and the projector's Computer1 port.
- Make sure the cable from your monitor is connected to the projector's Monitor Out port.

You see a blue screen with the message No Signal displayed.

- Make sure the cables are connected correctly, as described in Chapter 1.
- Make sure the power to your computer or video source is turned on.
- If you've connected a computer and one or more video sources, you may need to press the Source Search button on the projector or the remote control to select the correct source. Allow a few seconds for the projector to sync up after pressing the button.
- If you've connected a laptop computer, make sure it's set to display on an external monitor. See page 36.

The message Not Supported is displayed.

- Make sure your computer's resolution doesn't exceed UXGA and the frequency is supported by the projector. See page 93. If necessary, change your computer's resolution setting as described on page 82.
- Make sure the correct Video Signal is selected in the Signal menu. See page 56. It should normally be set to Auto.

The buttons on the projector don't work.

The Operation Lock may be enabled. Press and hold the Enter button on the projector for 7 seconds to release the lock.

Only part of the computer image is displayed.

- If you're projecting from a computer or RGB video device, press the Enter/Auto button on the remote control. If this doesn't work, you may need to adjust the Position setting in the Signal menu. See page 55 for more information.
- If you've enlarged part of the image using the E-Zoom button on the remote control, press the Esc button to cancel zooming and return to full display.
- Try pressing the Aspect button on the remote control to select a different aspect ratio (4:3, 16:9, or another available setting).
- Make sure your computer's resolution setting is correct and dual display is not activated. Ideally, it should be 1024 × 768 to match the projector's native resolution. If this option isn't available, select another compatible video format. See page 93.
  - Windows:
    Right-click the desktop, select Properties, click the Settings tab, and select a different resolution.
  - Macintosh OS X:
    On the Apple menu, choose System Preferences, then click Display or Displays. Select a different resolution.
- You also may need to modify existing presentation files if you created them for a different resolution. See your software documentation for specific information.

The image isn't rectangular, but trapezoid-shaped.

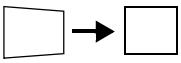

- Make sure the projector isn't placed off to one side of the screen, at an angle, or the image won't be rectangular. Place it directly in front of the center of the screen, facing the screen squarely.

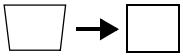

- If you've tilted the projector upward, the image will be broader at the top. Turn on Auto Keystone as described on page 56 or hold down the ▸⏢◂ or ▸⏢◂ buttons on top of the projector until the image is rectangular.

The image contains static or noise.

- If you're using a computer cable longer than 6 feet (2 meters), or an extension cable, the image quality may be reduced.
- Keep your computer and video cables separated from the power cord as much as possible to prevent interference.
- The video signal may be split between the computer and the projector. If you notice a decline in the projected image quality when the image is displayed simultaneously on your laptop computer and the projector, turn off the laptop's LCD display.
- If you're projecting from a composite or S-Video source, check the Video Signal setting in the Signal menu. In most cases, leave it set at Auto. If you're using a 60-Hz PAL video source, change this setting to PAL60. See page 56 for details.
- Make sure the cables are securely connected at both ends.
- Select the correct resolution; see "Compatible Video Formats" on page 92.
- If you're projecting from a computer, press the Enter/Auto button on the remote control or the Enter button on the projector to adjust tracking and sync automatically. If that doesn't work, try adjusting the Sync and Tracking settings in the Signal menu. See page 55.

The image is blurry.

- Adjust the focus using the focus ring. See page 38.
- Try cleaning the lens as described on page 70.
- Make sure the lens is not fogged by condensation. You may need to wait before using the projector after moving it from a cold environment.
- Make sure the projection distance is within the range described on page 16.
- Adjust the Sharpness setting on the Image menu (see page 54). You should be able to see the effect on the screen immediately.

You see vertical stripes or the image still looks blurry after trying the solutions in the previous section.

- If you're projecting from a computer and displaying an image that contains a lot of fine detail, you may notice one or more vertical stripes or bands, or some of the characters may look heavy or blurred. Press the Enter/Auto button on the remote control to automatically reset the projector's tracking and sync settings.
- If necessary, you can manually adjust the Tracking and Sync settings on the Signal menu as described on page 55.

  To help you adjust these settings, fill the screen with a detailed image, such as a desktop background pattern or black text on a white background. Adjust the Tracking setting to eliminate vertical stripes; adjust the Sync setting to increase the sharpness.

The colors of the image are not right.

note

Because of the different technologies used, your projected image may not exactly match the colors on your laptop or computer monitor.

- Try selecting a different Color Mode. See page 53 for instructions.
- If you're displaying video, adjust the Color Saturation and Tint settings on the Image menu. See page 53 for instructions.
- Adjust the Brightness, Contrast, and Color Adjustment settings on the Image menu. See page 53.
- Make sure the input signal setting on the Signal menu matches the signal from the connected device. See page 54 for details.

  If the image is too purple and you've connected a computer or RGB video device to the Computer1 or Computer2 port, select Computer as the input source. If you've connected a component video device to one of these ports, select Component Video.

  If you're projecting from a composite video or S-Video source, select the correct Video Signal is selected on the Signal menu.
- Check your computer display settings to correct the color balance.
- If the image seems dark, the lamp may be nearing time for replacement. Check the lamp hours as described on page 60 and replace it, if necessary, as described on page 72.

There is no sound.

- Press the 🔊 button on the projector or the Vol+ button on the remote control to turn up the volume.
- If you've turned off the picture and sound, press the A/V Mute button on the remote control to turn them on again.
- If you're using a DVD player or other video source, or external speakers, make sure their volume is not turned all the way down or muted. Also, make sure the cables are connected correctly, as described in Chapter 1.
- Make sure the audio cable is connected to the correct audio port. See page 22 or page 29.
- If your presentation includes computer audio, make sure the volume control on your computer is not turned all the way down or muted. Make sure the audio cable is securely connected to both the projector and your computer. See page 22.
- The wrong source may be selected. Press the Source Search button on the projector or the remote control.

Solving Password Problems

You have forgotten the password.

- Write down the request code that appears in the Password Protect Release screen and contact Epson. See page 87.
- If you turned on the password protect feature before setting the password and no password was set before, try using the default password: 0000.

The remote control is not available.

You must have the remote control to enter the password. You can purchase a replacement remote control from Epson. See page 88.

Solving Problems with the Remote Control

The projector doesn't respond to remote control commands.

- Make sure you are within 20 feet of the projector, and within range of the projector's front or back sensor (approximately 30° to the left or right and 15° above or below).
- If a button on the remote control is held for more than 30 seconds, the remote enter sleep mode. Press another button for normal operation.
- The remote control batteries may not be installed correctly or may be low on power. Replace the batteries as described on page 48.
- Dim the room lights and turn off any fluorescent lights. Make sure the projector is not in direct sunlight. Strong lighting, especially fluorescent lights, may affect the projector's infrared receivers. If you still have trouble using the remote control, disable one of the remote receivers using the Settings menu to block interference from bright light. See page 56 for details.
- Turn off any nearby equipment that emits infrared energy, such as a radiant room heater.

You have lost the remote control.

You need the remote control to access many projector features. If you have lost it, you can order another from Epson. See page 88 for details.

Where To Get Help

Epson provides these technical support services:

Internet Support

Visit Epson's support website for solutions to common problems with the PowerLite 83V+. You can download utilities and documentation, get FAQs and troubleshooting advice, or e-mail Epson with your questions.

Speak to a Support Representative

To use the Epson PrivateLine Support service, call (800) 637-7661 and enter the PIN on the included Epson PrivateLine Support card. This is the fastest way of speaking to a live representative, and it's free. This service is available 6 AM to 6 PM, Pacific Time, Monday through Friday, for the duration of your warranty period.

You may also speak with a projector support specialist by dialing one of these numbers:

- U.S.: (562) 276-4394, 6 AM to 6 PM, Pacific Time, Monday through Friday
- Canada: (905) 709-3839, 6 AM to 6 PM, Pacific Time, Monday through Friday

Days and hours of support are subject to change without notice. Toll or long distance charges may apply.

Before you call, please have the following information ready:

- Product name (PowerLite 83V+)
- Product serial number (located on the bottom of the projector)
- Proof of purchase (such as a store receipt) and date of purchase
- Computer or video configuration
- Description of the problem

Purchase Supplies and Accessories

You can purchase screens, carrying cases, or other accessories from an Epson authorized reseller. To find the nearest reseller, call 800-GO-EPSON (800-463-7766). Or you can purchase online at www.epsonstore.com (U.S. sales) or www.epson.ca (Canadian sales).

A Technical Specifications

General

Type of display	Poly-silicon TFT active matrix
Lens	F=1.6 to 1.74, 18.4 to 22.12 mm
Resolution	1024 × 768 pixels (XGA)
Color reproduction	Full color, 16.77 million colors
Light output (brightness)	High brightness mode White light output 2200 lumens (ISO 21118 standard) Color light output 2200 lumens Low brightness mode White light output 1760 lumens (ISO 21118 standard)
Contrast ratio	400:1
Image size	30 to 300 inches (0.8 to 7.6 meters)
Projection distance	2.7 to 34 feet (0.9 to 10.4 meters)
Projection methods	Front, rear, ceiling
Focus adjustment	Manual
Zoom adjustment	Manual
Internal sound system	10 W monaural
Optical aspect ratio	4:3 (horizontal:vertical)
Zoom ratio	1:1.2 (optical)

note

Lamp life will vary depending upon mode selected, environmental conditions and usage. Brightness decreases over time.

Noise level	35 dB (High brightness mode) 28 dB (Low brightness mode)
Keystone correction angle	± 30° vertical (maximum)

Projection Lamp

Power consumption	170 W UHE
Lamp life	About 3000 hours (High brightness); 4000 hours (Low brightness)

Remote Control

Range	20 feet (6 meters)
Batteries (2)	Alkaline AA

Dimensions

Height (including feet)	4.3 inches (108 mm)
Width	12.9 inches (327 mm)
Depth	9.6 inches (245 mm)
Weight	6.4 lb (2.9 kg)

Electrical

Rated frequency	50/60 Hz
Power supply	100 to 120 VAC, 2.8 A 220 to 240 VAC, 1.2 A
Power consumption	Operating: 248 W Standby: 4.1 W

Environmental

Temperature	Operating: 41 to 95 °F (5 to 35 °C) Storage: 14 to 140 °F (–10 to 60 °C)
Humidity	Operating: 20 to 80% RH, non-condensing Storage: 10 to 90% RH, non-condensing
Altitude	Up to 4,900 feet (1,500 m) Up to 7,500 feet (2,286 m) with High Altitude Mode enabled; see page 58

Safety and Approvals

United States	FCC Part15B Class B (DoC) UL60950-1
Canada	ICES-003 Class B CSA C22.2 No. 60950-1

Pixelworks™ DNX™ ICs are used in this projector.

Compatible Video Formats

You can use any of the following video sources: VCR, DVD player, camcorder, digital camera, or gaming console. The projector supports composite video, S-Video, component video, and RGB video, and it automatically senses the video format (HDTV, SDTV, NTSC, PAL, or SECAM).

The projector supports these international video standards:

Mode	Refresh Rate (Hz)
NTSC	60
NTSC 4:3	60
PAL	50
M-PAL	60
N-PAL	50
PAL60	60
SECAM	50
TV525i	60
TV625i	50
SDTV (480p and 480i)	60
SDTV (576p and 576i)	50
HDTV720p	60
HDTV720p	50
HDTV1080i	60
HDTV1080i	50

Compatible Computer Display Formats

You can connect the projector to a wide range of computers, including PCs and notebooks, Apple Macintosh, PowerPC and Intel Core Macintosh computers, PowerBook computers, many iMac and iBook series systems, and high-end workstations such as the Sun® SPARCstation.™

Although images are displayed at the projector's native resolution of 1024 × 768 pixels, Epson's patented SizeWise chip supports computer display formats ranging from VGA through UXGA.

To project images output from a computer, the computer's external monitor signal must be set at a refresh rate (vertical frequency) that's compatible with the projector; see the following table for compatible formats. For best results, the computer's resolution should be set to match the projector's native resolution (1024 × 768). If this resolution isn't available, select one of the other compatible formats:

- Windows:
  Right-click the desktop, select Properties, click the Settings tab, and select a compatible resolution. (For a notebook displaying through an external monitor port, you'll need to click the Advanced button on the Settings tab, then adjust the resolution of the external monitor.)
- Macintosh OS X:
  From the Apple menu, select System Preferences, then click Display or Displays. Make sure the VGA Display or Color LCD dialog box is selected, then click the Display tab and select a compatible resolution.

You may need to modify existing presentation files if you created them for a different resolution. See your software documentation for details.

The projector supports these monitor display formats:

Mode	Refresh Rate (Hz)	Resolution
VGA EGA	70	640 × 350
VGA—60 VESA—72 VESA—75 VESA—85 VGA—120	60 72 75 85 120	640 × 480 640 × 480 640 × 480 640 × 480 640 × 480
SVGA—56 SVGA—60 SVGA—72 SVGA—75 SVGA—85 SVGA—120	56 60 72 75 85 120	800 × 600 800 × 600 800 × 600 800 × 600 800 × 600 800 × 600
XGA—60 XGA—70 XGA—75 XGA—85 XGA—120	60 70 75 85 120	1024 × 768 1024 × 768 1024 × 768 1024 × 768 1024 × 768
SXGA1—70 SXGA1—75 SXGA1—85 SXGA1—100	70 75 85 120	1152 × 864 1152 × 864 1152 × 864 1024 × 768
SXGA2—60 SXGA2—75 SXGA2—85	60 75 85	1280 × 960 1280 × 960 1280 × 960
SXGA3—60 SXGA3—75 SXGA3—85	60 75 85	1280 × 1024 1280 × 1024 1280 × 1024
SXGA+—60 SXGA+—75 SXGA+—85	60 75 85	1400 × 1050 1400 × 1050 1400 × 1050
UXGA—60	60	1600 × 1200

Mode	Refresh Rate (Hz)	Resolution
iMAC VGA	117	640 × 480
iMAC SVGA	95	800 × 600
iMAC XGA	75	1024 × 768
MAC13	67	640 × 480
MAC16	75	832 × 624
MAC19—60	59	1024 × 768
MAC19	75	1024 × 768
MAC21	75	1152 × 870
SDTV 480i	60	720 × 480
SDTV (576i)	50	720 × 576
SDTV (480p)	60	720 × 480
SDTV (576p)	50	720 × 576
HDTV (720p)	50/60	1280 × 720
HDTV (1080i)	50/60	1920 × 1080

B Notices

This chapter includes safety instructions and other important information about your PowerLite projector.

Important Safety Instructions

Follow these safety instructions when setting up and using the projector:

- Do not place the projector on an unstable cart, stand, or table.
- Do not use the projector near water or sources of heat.
- Use the type of power source indicated on the projector. If you are not sure of the power available, consult your dealer or power company.
- Place the projector near a wall outlet where the plug can be easily unplugged.
- Insert the projector's two-prong plug into a properly grounded outlet. Do not hold the plug with wet hands.
- Take the following precautions for the plug. Failure to comply with these precautions could result in sparks or fire: Do not insert the plug into an outlet with dust present. Insert the plug firmly into the outlet.
- Do not overload wall outlets, extension cords, or integral convenience receptacles. This can cause fire or electric shock.
- Do not place the projector where the cord can be walked on. This may result in fraying or damage to the plug.
- Unplug the projector from the wall outlet before cleaning. Use a damp cloth for cleaning. Do not use liquid or aerosol cleaners.
- Do not block the slots and openings in the projector case. They provide ventilation and prevent the projector from overheating. Do not operate the projector on a sofa, rug, or other soft surface, or in a closed-in cabinet unless proper ventilation is provided.
- Never push objects of any kind through the cabinet slots. Never spill liquid of any kind into the projector.

- Except as specifically explained in this *User's Guide*, do not attempt to service this product yourself. Refer all servicing to qualified personnel. Opening or removing covers may expose you to dangerous voltages and other hazards.
- Unplug the projector from the wall outlet and refer servicing to qualified service personnel under the following conditions: When the power cord or plug is damaged or frayed. If liquid has been spilled into the projector, or if it has been exposed to rain or water. If it does not operate normally when you follow the operating instructions, or if it exhibits a distinct change in performance, indicating a need for service. If it has been dropped or the housing has been damaged.
- (Hg) The lamp(s) in this product contain mercury. Please consult your state and local regulations regarding disposal or recycling. Do not put in the trash.
- Unplug the projector during lightning storms or when it will not be used for extended periods.
- Do not place the projector and/or remote control on top of heat-producing equipment or in a hot location.
- If you use the projector in a country other than where you purchased it, use the correct power cord for that country.
- Do not stand on the projector or place heavy objects on it.
- Do not use the projector outside of the required temperature range of 41 to 95 °F (5 to 35 °C). Doing so may cause an unstable display and could lead to projector damage.
- Do not store the projector outside of the required temperature range of 14 to 140 °F (–10 to 60 °C) or in direct sunlight for long periods of time. Doing so may cause damage to the case.

WARNING: The cords included with this product contain chemicals, including lead, known to the State of California to cause birth defects or other reproductive harm. *Wash hands after handling.* (This notice is provided in accordance with Proposition 65 in Cal. Health & Safety Code § 25249.5 and following.)

FCC Compliance Statement

For United States Users

This equipment has been tested and found to comply with the limits for a Class B digital device, pursuant to Part 15 of the FCC Rules. These limits are designed to provide reasonable protection against harmful interference in a residential installation. This equipment generates, uses, and can radiate radio frequency energy and, if not installed and used in accordance with the instructions, may cause harmful interference to radio or television reception. However, there is no guarantee that interference will not occur in a particular installation. If this equipment does cause interference to radio and television reception, which can be determined by turning the equipment off and on, the user is encouraged to try to correct the interference by one or more of the following measures:

- Reorient or relocate the receiving antenna.
- Increase the separation between the equipment and receiver.
- Connect the equipment into an outlet on a circuit different from that to which the receiver is connected.
- Consult the dealer or an experienced radio/TV technician for help.

WARNING

The connection of a non-shielded equipment interface cable to this equipment will invalidate the FCC Certification or Declaration of this device and may cause interference levels which exceed the limits established by the FCC for this equipment. It is the responsibility of the user to obtain and use a shielded equipment interface cable with this device. If this equipment has more than one interface connector, do not leave cables connected to unused interfaces. Changes or modifications not expressly approved by the manufacturer could void the user's authority to operate the equipment.

For Canadian Users

This Class B digital apparatus meets all requirements of the Canadian Interference-Causing Equipment Regulations.

Cet appareil numérique de la classe B respecte toutes les exigences du Règlement sur le materiel brouilleur du Canada.

Index

A

A/V cable, 24 to 25
A/V Mute, 46, 59, 63 to 64, 80, 85
Accessories, 13, 88
Air filter
  cleaning and replacing, 70 to 72
  purchasing, 13
Altitude, 59, 91
Anti-theft device, 13
Aspect button, 47
Aspect ratio, 47, 56, 89
Aspect setting, 56
Audio
  adjusting volume, 41, 57
  cable, 22, 85
  connecting laptop, 22
  problems, troubleshooting, 85
  turning off, 46
Auto button, 41, 55
Auto Keystone correction, 17, 40, 50, 57
Auto Setup setting, 41, 55

B

Background Color setting, 59, 65
Banding in image, 84
Batteries, replacing, 48
Blackboard color mode, 45, 53
Blank screen, 36 to 37, 80 to 81
Blue background, 59
Blurry image, 83
Brightness, 72, 89
Brightness Control setting, 40, 80
Brightness setting, 40, 53, 80, 84
Buttons, disabling projector, 57, 67

C

Cables, 10 to 13, 88
Camcorder, connecting to, 24 to 31
Carrying case, optional, 76
Ceiling
  mount, 17
  projection, 17, 59
Cleaning
  air filter and vents, 70 to 72
  lens, 70
  projector case, 70
Color
  adjusting, 45, 52 to 54
  problems, 84
  specifications, 89
Color Adjustment setting, 54
Color Mode, 45, 53
Color Saturation setting, 53
Component-to-VGA video cable, 12 to 13, 24, 28
Composite video cable, 24 to 25
Computer
  cable, 10, 18 to 20
  connecting to projector, 18 to 22
  source, selecting, 19, 20, 36, 44, 55
  support, 7
  supported display formats, 93 to 95
Computer/Component Video ports, 19 to 20, 27, 44
Connecting projector
  to a computer, 18 to 22
  to a game console, 24 to 31
  to a video source, 24 to 31
  to external monitor, 21
  to speakers, 23, 31
Contrast, 89
Contrast setting, 53, 84

D

Default password, 62
Default settings, restoring, 68
Digital camera, connecting to, 24 to 31
Dimensions, 90

Direct Power On setting, 59
Distance from projector to screen, 16, 89
Documentation, using, 9
DVD player, connecting to, 24 to 31

E

Entering the password, 66
Environmental specifications, 91
Epson
  accessories, 13, 88
  PrivateLine Support, 9, 87
  Store, 88
  technical support, 9, 87
  warranty, 10
Extended menu, 50, 58 to 59
External monitor, connecting, 21
E-Zoom button, 47

F

FCC compliance statement, 99
Filter, cleaning and replacing, 70 to 72
Focusing, 38
Foot release lever, 39
Freeze button, 46
Front projection, 16 to 17, 59
Front/Ceiling setting, 17, 59
Full Lock setting, 57, 67

G

Game color mode, 45, 53
Game console, connecting to, 24 to 31

H

Height of image, adjusting, 39
Help, 9, 87
Help system, using, 78
High Altitude Mode setting, 59, 91
High brightness, 40, 72, 80, 89

I

iBook, connecting to, 18 to 19
iMac, connecting to, 12, 18 to 20
Image
  capturing and saving in projector, 63 to 64
  correcting shape of, 40, 57, 82
  fitting on screen, 41, 55, 56, 82
  focusing, 38
  freezing, 46
  height, adjusting, 39
  menu, 50, 52 to 54
  positioning, 39, 41, 55
  problems, 80 to 84
  raising, 39
  selecting source, 19, 20, 25, 35, 36, 44, 55 to 56
  shape, correcting, 40, 57, 82
  size and projection distance, 16, 89
  turning off, 46
  zooming, 47
Info menu, 50, 60 to 61
Input signal, selecting, 19, 20, 25 to 28, 36, 44, 55 to 56
Instant Off feature, 42

K

Kensington anti-theft device, 13
Keystone correction, 40, 57, 82, 90

L

Lamp
  automatic shutoff, 42
  brightness, 72, 80, 89
  number of hours used, 60, 72, 75, 90
  replacing, 72 to 75
  specifications, 90
  status light, 78 to 79
  timer, resetting, 75
Language setting, 59
Laptop computer
  connecting to, 18 to 20
  displaying on, 36 to 37, 81
LCD panels, 7

Lens
cleaning, 70
specifications, 89
Lights, status, 78 to 79
Logo
creating, 63 to 64
displaying, 64 to 65
turning on, 59, 65
Low brightness, 40, 72, 89

M

Macintosh
connecting, 18 to 20
Macintosh display problems, 37
Manuals, 9
Menus
changing settings, 51 to 52
Extended, 50, 58 to 59
Image, 50, 52 to 54
Info, 50, 60 to 61
Reset, 50, 68
Settings, 50, 56 to 57
Signal, 50, 54 to 56
User's Logo, 63 to 64
using, 50 to 52
Messages setting, 58
Monitor, external, 21
Moving projector, 76

N

No Signal message, 36 to 37
Noise level, 90

O

Operation Lock setting, 57, 67
Options for projector, 13, 88

P

Password
default, 62
entering, 66
logo protection, 63 to 66
problems, 85
prompt, 35, 66
request code, 66
setting, 64 to 65
turning on, 65
Photo color mode, 45, 53
Picture source, selecting, 19, 20, 25 to 28, 36, 55 to 56
Pixelworks, 91
Position setting, 55
Positioning
image, 39, 55
projector, 16 to 17
Power
button, 35, 42
consumption, 90
light, 35, 78 to 79
supply, 90
PowerBook, connecting to, 18 to 20
Presentation color mode, 45, 53
PrivateLine Support, 9, 87
Problems
color, 84
image, 80 to 84
no signal, 36 to 37
password, 85
remote control, 86
sound, 85
Projection lamp, *see* Lamp

Projector
accessories, 13, 88
carrying case, optional, 76
cleaning, 69 to 72
disabling buttons, 57, 67
distance from screen, 16, 89
foot, adjusting height with, 39
lamp specifications, 90
password protection, 61 to 66
positioning, 16 to 17
resolution, 7, 89, 93 to 95
transporting, 76
turning off, 42
turning on, 34 to 35
unpacking, 10
viewing information about, 60 to 61

Q

Quick Setup sheet, 9

R

Raising image, 39
RCA A/V cable, 24 to 25
Rear projection, 17, 59
Registration, 10
Remote control
problems, 86
receivers, disabling, 57, 80, 86
replacing batteries, 48
specifications, 90
using, 43 to 48
Remote Receiver setting, 57, 80, 86
Replacing
air filter, 70 to 72
lamp, 72 to 75
remote control batteries, 48
Request code, password, 66
Reset menu, 50, 68
Resolution, 7, 60, 89, 93 to 95

S

Safety
approvals, 91
instructions, 97 to 98
Screen logo, *see* User's Logo
Screen, distance from projector, 16, 89
Screens, portable, 13
Setting a password, 64 to 65
Settings menu, 50, 56 to 57
Sharpness setting, 54
Signal menu, 50, 54 to 56
Sleep mode, 42, 59
Sound, *see* Audio
Source Search button, 19 to 20, 25 to 28, 35 to 36, 44
Speaker, specifications, 89
Speakers, connecting external, 23, 31
Specifications, technical, 89 to 95
Sports color mode, 45, 53
sRGB color mode, 45, 53
Startup screen
creating, 63 to 64
displaying, 64 to 65
user's logo, *see* User's Logo
Startup Screen setting, 59
Status lights, 78 to 79
Stopping action, 46
Stripes in image, 84
Support, 9, 87
S-Video cable, 12, 13, 24
Switching picture source, 36, 44
Sync, adjusting, 55, 83 to 84

T

Technical support, 9, 87
Temperature
light, 78 to 79
requirements, 91
Test Pattern setting, 57
Text color mode, 45
Theatre color mode, 45, 53
Timer, lamp, 75
Tint setting, 54

Tracking, adjusting, 55, 83 to 84
Transporting projector, 76
Troubleshooting
    color, 84
    cut-off image, 41, 82
    image quality, 83 to 84
    image shape, 82
    no image, 80 to 81
    no signal, 36 to 37
    no sound, 85
    password, 85
    remote control problems, 86
Turning off
    audio, 46
    picture, 46
    projector, 42
Turning on
    password, 65
    projector, 34 to 35
    User's Logo, 59, 65
Typing the password, 66

U

Unpacking projector, 10
User's Logo
    creating, 63 to 64
    displaying, 64 to 65
    turning on, 59, 65

V

VCR, connecting to, 24
VGA computer cables, 10, 18 to 20
Video
    display settings, 60 to 61
    formats, supported, 7, 92
    source, connecting to, 24 to 31
    source, selecting, 25, 35 to 36, 44, 55 to 56
Video Signal setting, 56
Volume, adjusting, 41, 57

W

Warning lights, 78 to 79
Warranty, 10, 10
Weight, 90

Z

Zoom ratio, 89
Zooming image, 47

EPSON®
EXCEED YOUR VISION