USA's primary source for projector lamps
myprojectorlamps

PROJECTOR OWNER'S MANUAL

EIKI

LC-XT6

Need a replacement lamp for this projector?

www.myprojectorlamps.com

Original manufacturer manual, provided unmodified as a courtesy of MyProjectorLamps.com.
All trademarks belong to their respective owners.

EIKI

LCD PROJECTOR

MODEL LC-XT6

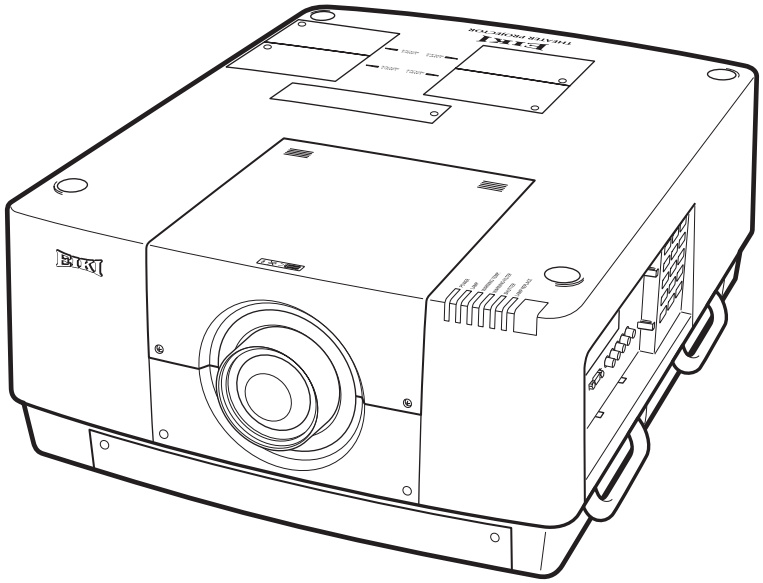

✻ Projection lens not included.

Owner's Manual

Projector Operations

ENGLISH

TQBJ0489

Read this first!

WARNING: THIS APPARATUS MUST BE EARTHED.

WARNING: To prevent damage which may result in fire or shock hazard, do not expose this appliance to rain or moisture.

Machine Noise Information Ordinance 3. GSGV, January 18, 1991: The sound pressure level at the operator position is equal or less than 70 dB (A) according to ISO 7779.

WARNING:

1. Remove the plug from the mains socket when this unit is not in use for a prolonged period of time.
2. To prevent electric shock, do not remove cover. No user serviceable parts inside. Refer servicing to qualified service personnel.
3. Do not remove the earthing pin on the mains plug. This apparatus is equipped with a three prong earthingtype mains plug. This plug will only fit an earthing-type mains socket. This is a safety feature. If you are unable to insert the plug into the mains socket, contact an electrician. Do not defeat the purpose of the earthing plug.

WARNING:

This is a class A product. In a domestic environment this product may cause radio interference in which case the user may be required to take adequate measures.

CAUTION: To assure continued compliance, follow the attached installation instructions, which include using the provided power cord and shielded interface cables when connecting to computer or peripheral device. If you use serial port to connect PC for external control of projector, you must use optional RS-232C serial interface cable with ferrite core. Any unauthorized changes or modifications to this equipment will void the user's authority to operate.

EEE Yönetmeliğine Uygundur.
EEE Complies with Directive of Turkey.

WARNING:

TURN OFF THE UV LAMP BEFORE OPENING THE LAMP COVER

WARNING: TO REDUCE THE RISK OF FIRE OR ELECTRIC SHOCK, DONOT EXPOSE THIS PRODUCT TO RAIN OR MOISTURE.

WARNING: RISK OF ELECTRIC SHOCK, DO NOT OPEN.

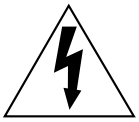

The lightning flash with arrowhead symbol, within an equilateral triangle, is intended to alert the user to the presence of uninsulated "dangerous voltage" within the product's enclosure that may be of sufficient magnitude to constitute a risk of electric shock to persons.

The exclamation point within an equilateral triangle is intended to alert the user to the presence of important operating and maintenance (servicing) instructions in the literature accompanying the product.

CAUTION (USA and Canada)

CAUTION: This equipment is equipped with a three-pin grounding-type power plug. Do not remove the grounding pin on the power plug. This plug will only fit a grounding-type power outlet. This is a safety feature. If you are unable to insert the plug into the outlet, contact an electrician. Do not defeat the purpose of the grounding plug.

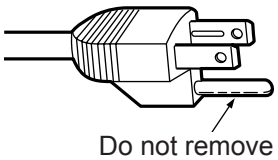

IMPORTANT: THE MOULDED PLUG (U.K. only)

FOR YOUR SAFETY, PLEASE READ THE FOLLOWING TEXT CAREFULLY.

This appliance is supplied with a moulded three pin mains plug for your safety and convenience. A 13 amp fuse is fitted in this plug. Should the fuse need to be replaced, please ensure that the replacement fuse has a rating of 13 amps and that it is approved by ASTA or BSI to BS1362.

Check for the ASTA mark or the BSI mark on the body of the fuse.

If the plug contains a removable fuse cover, you must ensure that it is refitted when the fuse is replaced. If you lose the fuse cover, the plug must not be used until a replacement cover is obtained. A replacement fuse cover can be purchased from an Authorised Service Center.

If the fitted moulded plug is unsuitable for the mains socket in your home, then the fuse should be removed and the plug cut off and disposed of safely. There is a danger of severe electrical shock if the cut off plug is inserted into any 13 amp socket.

If a new plug is to be fitted, please observe the wiring code as shown below.
If in any doubt, please consult a qualified electrician.

WARNING: THIS APPLIANCE MUST BE EARTHED.

IMPORTANT: The wires in this mains lead are coloured in accordance with the following code:

Green - and - Yellow:	Earth
Blue:	Neutral
Brown:	Live

As the colours of the wire in the mains lead of this appliance may not correspond with the coloured markings identifying the terminals in your plug, proceed as follows.

The wire which is coloured GREEN - AND - YELLOW must be connected to the terminal in the plug which is marked with the letter E or by the Earth symbol ⏚ or coloured GREEN or GREEN - AND - YELLOW.

The wire which is coloured BLUE must be connected to the terminal in the plug which is marked with the letter N or coloured BLACK.

The wire which is coloured BROWN must be connected to the terminal in the plug which is marked with the letter L or coloured RED.

How to replace the fuse: Open the fuse compartment with a screwdriver and replace the fuse.

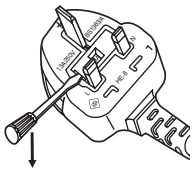

Read this first!

FCC NOTICE (USA)

Declaration of Conformity
This device complies with Part 15 of the FCC Rules.
Operation is subject to the following two conditions:
(1) This device may not cause harmful interference, and (2) this device must accept any interference received, including interference that may cause undesired operation.
To assure continued compliance, follow the attached installation instructions and do not make any unauthorized modifications.

CAUTION:
This equipment has been tested and found to comply with the limits for a Class A digital device, pursuant to part 15 of the FCC Rules. These limits are designed to provide reasonable protection against harmful interference when the equipment is operated in a commercial environment. This equipment generates, uses, and can radiate radio frequency energy and, if not installed and used in accordance with the instruction manual, may cause harmful interference to radio communications. Operation of this equipment in a residential area is likely to cause harmful interference in which case the user will be required to correct the interference at his own expense.

Model Number:	LC-XT6
Trade Name:	EIKI
Responsible Party:	EIKI International, Inc.
Address:	30251 Esperanza Rancho Santa Margarita CA 92688-2132
Telephone number:	800-242-3454 (949)-457-0200

NOTIFICATION (Canada)

This class A digital apparatus complies with Canadian ICES-003.

WARNING (USA and Canada)

- Not for use in a computer room as defined in the Standard for the Protection of Electronic Computer/Data Processing Equipment, ANSI/NFPA 75.
- For permanently connected equipment, a readily accessible disconnect device shall be incorporated in the building installation wiring.
- For pluggable equipment, the socket-outlet shall be installed near the equipment and shall be easily accessible.

NOTICE U.S.A. only:
- This product has a High Intensity Discharge (HID) lamp that contains mercury. Dispose may be regulated in your community due to environmental considerations. For disposal or recycling information, please visit EIKI website: http://www.eiki.com/

WARNING:

■ POWER

The wall outlet or the circuit breaker shall be installed near the equipment and shall be easily accessible when problems occur. If the following problems occur, cut off the power supply immediately.
Continued use of the projector in these conditions will result in fire or electric shock.
- If foreign objects or water get inside the projector, cut off the power supply.
- If the projector is dropped or the cabinet is broken, cut off the power supply.
- If you notice smoke, strange smells or noise coming from the projector, cut off the power supply.

Please contact an Authorized Service Center for repairs, and do not attempt to repair the projector yourself.

During a thunderstorm, do not touch the projector or the cable.
Electric shocks can result.

Do not do anything that might damage the power cord or the power plug.
If the power cord is used while damaged, electric shocks, short-circuits or fire will result.
- Do not damage the power cord, make any modifications to it, place it near any hot objects, bend it excessively, twist it, pull it, place heavy objects on top of it or wrap it into a bundle.

Ask an Authorized Service Center to carry out any repairs to the power cord that might be necessary.

Completely insert the power plug into the wall outlet and the power connector into the projector terminal.
If the plug is not inserted correctly, electric shocks or overheating will result.
- Do not use plugs which are damaged or wall outlets which are coming loose from the wall.

Do not use anything other than the provided power cord.
Failure to observe this will result in fire or electric shocks.

Clean the power plug regularly to prevent it from becoming covered in dust.
Failure to observe this will cause a fire.
- If dust builds up on the power plug, the resulting humidity can damage the insulation.
- If not using the projector for an extended period of time, pull the power plug out from the wall outlet.

Pull the power plug out from the wall outlet and wipe it with a dry cloth regularly.

Do not handle the power plug with wet hands.
Failure to observe this will result in electric shocks.

Do not overload the wall outlet.
If the power supply is overloaded (ex., by using too many adapters), overheating may occur and fire will result.

■ ON USE/INSTALLATION

Do not place the projector on soft materials such as carpets or sponge mats.
Doing so will cause the projector to overheat, which can cause burns, fire or damage to the projector.

Do not set up the projector in humid or dusty places or in places where the projector may come into contact with oily smoke or steam, ex. a bathroom.
Using the projector under such conditions will result in fire, electric shocks or deterioration of components. Deterioration of components (such as ceiling mount brackets) may cause the projector which is mounted on the ceiling to fall down.

Do not install this projector in a place which is not strong enough to take the full weight of the projector or on top of a surface which is sloped or unstable.
Failure to observe this will cause projector to fall down or tip over the projector, and severe injury or damage could result.

Read this first!

WARNING:

Do not cover the air intake/exhaust ports or place anything within 1 m (39”) of them.
Doing so will cause the projector to overheat, which can cause fire or damage to the projector.
- Do not place the projector in narrow, badly ventilated places.
- Do not place the projector on cloth or papers, as these materials could be drawn into the air intake port.

Do not place your hands or other objects close to the air exhaust port.
Doing so will cause burns or damage your hands or other objects.
- Heated air comes out of the air exhaust port. Do not place your hands or face, or objects which cannot withstand heat close to this port.

Do not look and place your skin into the lights emitted from the lens while the projector is being used.
Doing so can cause burns or loss of sight.
- Strong light is emitted from the projector’s lens. Do not look or place your hands directly into this light.
- Be especially careful not to let young children look into the lens. In addition, turn off the power and disconnect the power plug when you are away from the projector.

Never attempt to remodel or disassemble the projector.
High voltages can cause fire or electric shocks.
- For any inspection, adjustment and repair work, please contact an Authorized Service Center.

Do not project an image with the lens cover attached.
Doing so can cause fire.

Do not allow metal objects, flammable objects, or liquids to enter inside of the projector. Do not allow the projector to get wet.
Doing so may cause short circuits or overheating, and result in fire, electric shock, or malfunction of the projector.
- Do not place containers of liquid or metal objects near the projector.
- If liquid enters inside of the projector, consult your dealer.
- Particular attention must be paid to children.

Do not touch other than the specified portion or remove the components.
Doing so may impair the performance or safety.

Use the ceiling mount bracket specified by EIKI.
Using the ceiling mount bracket other than the specified one will result in falling accidents.
- Attach the supplied safety cable to the ceiling mount bracket to prevent the projector from falling down.

Installation work (such as ceiling mount bracket) should only be carried out by a qualified technician.
If installation is not carried out and secured correctly it can cause injury or accidents, such as electric shocks.
- Do not use anything other than an authorized ceiling mount bracket.
- Be sure to use the provided accessory wire with an eye bolt as an extra safety measure to prevent the projector from falling down. (Install in a different location to the ceiling mount bracket.)

When attaching or replacing a lens, consult the technical staff or service personnel at a specialist dealer.
Replacing a lens in the wrong way might damage the product.

When attaching or replacing a lens, observe related procedures in order to perform this properly.

WARNING:

■ ACCESSORIES

Do not use or handle the batteries improperly, and refer to the following.
Failure to observe this will cause burns, batteries to leak, overheat, explode or catch fire.
- Do not use unspecified batteries.
- Use manganese or alkaline batteries but not rechargeable batteries.
- Do not disassemble dry cell batteries.
- Do not heat the batteries or place them into water or fire.
- Do not allow the + and – terminals of the batteries to come into contact with metallic objects such as necklaces or hairpins.
- Do not store batteries together with metallic objects.
- Store the batteries in a plastic bag and keep them away from metallic objects.
- Make sure the polarities (+ and –) are correct when inserting the batteries.
- Do not use a new battery together with an old battery or mix different types of batteries.
- Do not use batteries with the outer cover peeling away or removed.

Do not allow children to reach the batteries (AAA/R03/LR03).
- The battery can cause personal injury if swallowed.
- If swallowed, seek medical advice immediately.

If the battery fluid leaks, do not touch it with bare hands, and take the following measures if necessary.
- Battery fluid on your skin or clothing could result in skin inflammation or injury.
  Rinse with clean water and seek medical advice immediately.
- Battery fluid coming in contact with your eyes could result in loss of sight.
  In this case, do not rub your eyes. Rinse with clean water and seek medical advice immediately.

Do not disassemble the lamp unit.
If the lamp breaks, it could cause injury.

Lamp replacement
The lamp has high internal pressure. If improperly handled, an explosion and severe injury or accidents will result.
- The lamp can easily explode if struck against hard objects or dropped.
- Before replacing the lamp, be sure to disconnect the power plug from the wall outlet.
  Electric shocks or explosions can result if this is not done.
- When replacing the lamp, turn the power off and allow it to cool for at least 60 minutes before handling it otherwise it can cause burns.

Do not allow infants or pets to touch the remote control unit.
- Keep the remote control unit out of the reach of infants and pets after using it.

Do not use the supplied power cord with devices other than this projector.
- Using the supplied power cord with devices other than this projector may cause short circuits or overheating, and result in electric shock or fire.

Remove the depleted batteries from the remote control promptly.
- Leaving them in the unit may result in fluid leakage, overheating, or explosion of the batteries.

CAUTION:

■ POWER

When disconnecting the power cord, be sure to hold the power plug and power connector.
If the power cord itself is pulled, the lead will become damaged, and fire, short-circuits or serious electric shocks will result.

When not using the projector for an extended period of time, disconnect the power plug from the wall outlet and remove the batteries from the remote control.

Disconnect the power plug from the wall outlet before carrying out any cleaning and replacing the unit.
Electric shocks can result if this is not done.

■ ON USE/INSTALLATION

Do not place heavy objects on top of the projector.
Failure to observe this will cause the projector to become unbalanced and fall, which could result in damage or injury. The projector will be damaged or deformed.

Do not put your weight on this projector.
You could fall or the projector could break, and injury will result.
- Be especially careful not to let young children stand or sit on the projector.

Do not place the projector in extremely hot locations.
Doing so will cause the outer casing or internal components to deteriorate, or result in fire.
- Take particular care in locations exposed to direct sunlight or near stoves.

Do not place your hands in the openings beside the optical lens, while shifting the lens.
Failure to observe this could cause injury.

When lifting or carrying the projector, do not hold the lens hood and lens.
Doing so may damage the projector.

Always disconnect all cables before moving the projector.
Moving the projector with cables still attached can damage the cables, which will cause fire or electric shocks to occur.

Use the lens specified by EIKI.
Using the lens other than the specified one will result in malfunctions.
- Before attaching the lens, check the projector model no. and optional lens model no. and use the lens suitable for the projector.
- For details, consult your dealer.

■ ACCESSORIES

Do not use the old lamp unit.
If used it could cause lamp explosion.

If the lamp has broken, ventilate the room immediately. Do not touch or bring your face close to the broken pieces.
Failure to observe this will cause the user to absorb the gas which was released when the lamp broke and which contains nearly the same amount of mercury as fluorescent lamps, and the broken pieces will cause injury.
- If you believe that you have absorbed the gas or that the gas has got into your eyes or mouth, seek medical advice immediately.
- Ask your dealer about replacing the lamp unit and check the inside of the projector.

Do not reuse the air filter unit.
Doing so may result in malfunctions.

Do not clean the air filter unit with water.
Doing so may result in malfunctions.
- Be careful not to wet the air filter unit.

Ask your dealer about cleaning the inside the projector once a year.
Continuous use while dust is accumulated inside the projector may result in fire.
- For cleaning fee, ask your dealer.

To remove the battery
Remote Control Battery

1. Press the guide and lift the cover.

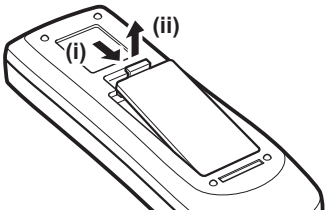

2. Remove the batteries.

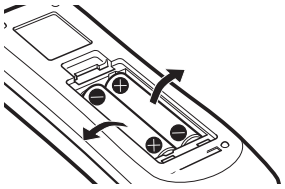

Brazil Only
Brasil Apenas

■ Manuseio de baterias usadas

BRASIL
Após o uso, as pilhas e /ou baterias poderão ser entregues ao estabelecimento comercial ou rede de assistência técnica autorizada.

Cobrir os terminais positivo (+) e negativo (-) com uma fita isolante adesiva, antes de depositar numa caixa destinada para o recolhimento. O contato entre partes metálicas pode causar vazamentos, gerar calor, romper a blindagem e produzir fogo.
Não desmonte, não remova o invólucro, nem amasse a bateria. O gás liberado pela bateria pode irritar a garganta, danificar o lacre do invólucro ou o vazamento provocar calor, ruptura da blindagem e produzir fogo devido ao curto circuito dos terminais.
Não incinere nem aqueça as baterias, elas não podem ficar expostas a temperaturas superiores a 100 °C (212 °F). O gás liberado pela bateria pode irritar a garganta,
danificar o lacre do invólucro ou o vazamento provocar calor, ruptura da blindagem e produzir fogo devido ao curto circuito dos terminais provocado internamente.
Evite o contato com o liquido que vazar das baterias. Caso isto ocorra, lave bem a parte afetada com bastante água. Caso haja irritação, consulte um médico.

■ Remoção das baterias

1. Pressione a guia e levante a tampa.

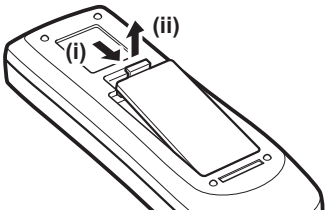

2. Remova as baterias.

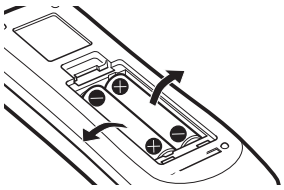

Trademarks
- HDMI, the HDMI logo and High-Definition Multimedia Interface are trademarks or registered trademarks of HDMI Licensing LLC.
- Other names, company names or product names used in these owner's manual are the trademarks or registered trademarks of their respective holders.
  Please note that the owner's manual do not include the ® and TM symbols

Illustrations in these owner's manual
- Note that illustrations of the projector and screens may differ from the ones you actually see.

Page references
- In these instructions, references to pages are indicated as: (➡ page 00).

Term
- In these instructions, the “Wireless/wired remote control unit” accessories are referred to as the “Remote control”.

Features of the projector

High clarity and high contrast image

- Image quality of high clarity with 16 000 lumens and high contrast with 2 500:1.

More flexible setup

- Allows installation of vertically 360° direction. Equipped with the electric lens shift function that enables vertical and horizontal positioning adjustment as well as test patterns. Also, you can use lights for the control panel and connection terminals. In addition, you can choose one from nine types of optional lenses.

High reliability and maintainability

- Equipped with auto-switchable four lamps that enable continuous projecting when a lamp has been worn out. The air filter and smoke resistant filter (optional) block dust and smoke and keep clear images and long life of the projector.

Quick steps

For details, see the corresponding pages.

1. **Set up your projector. (➡ page 24)**
2. **Connect with external devices. (➡ page 26)**
3. **Connect the power cord. (➡ page 31)**
4. **Power on. (➡ page 33)**
5. **Select the input signal. (➡ page 35)**
6. **Adjust the image. (➡ page 35)**

Contents

Be sure to read "Read this first!". (➡ pages 2 to 10)

Important Information

Read this first! 2

Precautions for use 14

Cautions when transporting 14
Cautions when installing 14
Security 15
Disposal 15
Cautions on use 15
Accessories 17
Optional accessories 18

Preparation

About your projector 19

Remote control 19
Projector body 20

Using the remote control 23

Inserting and removing the batteries 23
Setting remote control numbers 23
Using the remote control as a wired remote control 23

Getting Started

Setting up 24

Attaching the lens 24
Projection method 24
Installation options (optional) 25
Adjustable feet 25

Connections 26

Before connecting to the projector 26
Connecting example: Computers 26
Connecting example: AV equipment 27
Tying up the cables using cable ties 28

Installing an input module (optional) 29

Installing an input module 29
List of compatible signals 30
Connection of signal to input module 30

Basic Operation

Powering on/off 31

Connecting the power cord 31
Power indicator 32
Powering on the projector 33
Making adjustments and selections 33
Powering off the projector 34
Direct power off function 34
Power management function 34

Projecting 35

Selecting the input signal 35
Adjusting the image 35

Using the remote control 37

Using the shutter function 37
Using the freeze function 37
Switching the input signal 37
Correcting the keystone effect 38
Selecting picture quality mode 38
Adjusting picture quality 39
Screen button 39
Displaying a timer for presentations 39
Checking the settings 39

Settings

Menu navigation 40

Navigating through menu 40
Main menu 41
Sub menu 41

[Input] menu 44

[Input 1] 44
[Input 2] 44
[System] 45

[PC adjust] menu 46

[Auto PC adj.] 46
[Fine sync] 46
[Total dots] 46
[Position H] 46
[Position V] 47
[Current mode] 47
[Clamp] 47
[Display area H] 47
[Display area V] 47
[Reset] 48
[Mode free] 48
[Store] 48

[Image select] menu 49

Adjusting the picture quality 49

[Image adjust] menu 50

[Contrast] 50
[Brightness] 50
[Color] 50
[Tint] 50
[Color management] 51

[Color temp.] 52
White balance ([Red]/[Green]/[Blue]) 52
[Offset] 52
[Auto picture control] 52
[Advanced color] 52
[Sharpness] 53
[Gamma] 53
[Noise reduction] 53
[Progressive] 53
[Reset] 53
[Store] 54
[Screen] menu 55
[Normal] 55
[Full] 55
[Wide(16:9)] 55
[Zoom] 55
[True] 55
[Custom] 56
[Custom adj.] 56
[Digital zoom +] 56
[Digital zoom -] 57
[Keystone] 57
[Ceiling] 58
[Rear] 58
[Reset] 58
[Setting] menu 59
[Language] 59
[Menu position] 59
[Display] 59
[Background] 60
[Lamp select] 60
[Lamp power] 60
[Lamp interval] 61
[Edge blending] 61
[Color matching] 62
[Advanced color matching] 63
[HDMI setup] 65
[Logo] 65
[Fan control] 67
[Remote control] 67
[RC sensor] 67
[Power management] 68
[Direct on] 68
[Security] 69
[Projector ID] 70
[Shutter] 70
[Video delay control] 71
[Closed caption] 72
[Filter counter] 72
[P-timer] 73
[Test pattern] 74
[Factory default] 74
[Information] menu 75
Confirming the settings and usage state 75
[Network] menu 76

Maintenance

About indicator status 77
If an indicator turns on 77
Maintenance/replacement 83
Before maintaining/replacing the unit 83
Maintenance 83
Replacing the parts 83
Troubleshooting 88

Appendix

Technical Information 90
Adjusting screens of multiple screen images 90
Label notifying registration of password 93
PJLink 93
Serial terminal 94
Serial Control Interface 95
Other terminals 97
List of compatible signals 99
Specifications 102
Dimensions 104
Ceiling mount bracket safeguards 105
Notes on attaching the lens 106
Lens specifications 106

Precautions for use

Cautions when transporting

- When transporting the projector, hold it securely by its carry handle and avoid excessive vibration and impacts by such handling as dragging it on the floor. Failure to do so may damage the internal parts and result in malfunctions.
- Do not transport the projector with the adjustable feet extended. Doing so may damage the adjustable feet.

Cautions when installing

Do not set up the projector outdoors.

The projector is designed for indoor use only.

Do not use in the following places.

- Places where vibration and impacts occur such as in a vehicle or vessel: Doing so may damage the internal parts and result in malfunctions.
- Near the exhaust of an air conditioner or near lights (studio lamps, etc.) where there are large swings in temperature (“Operating environment” (➡ page 103)): Doing so may shorten the life of the lamp or result in deformation of the outer case, which may in turn cause malfunctions.
- Near high-voltage power lines or near motors: Interference may occur.

Be sure to ask a qualified technician or your dealer before installing the product on a ceiling.

If the product is to be installed hanging from the ceiling, purchase the optional ceiling mount bracket.

Do not install the projector at elevations of 2 700 m (8 858 ft) or higher above sea level.

Failure to do so may shorten the life of the internal parts and result in malfunctions.

Do not use the projector while it is tilted (➡ page 24).

Using the projector while tilted may shorten the life of the internal parts.

Cautions when setting up the projectors

- Do not block the ventilation ports (intake and exhaust) of the projector.
- Avoid heated and cooled air from the air conditioning system directly blow to the ventilation ports (intake and exhaust) of the projector.
- Avoid setting up the projector in a humid or dusty location.

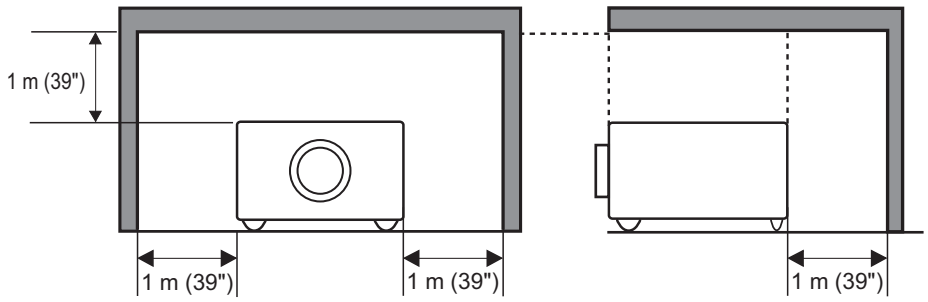

(over 1 m (39") for each top and side)

- Do not install the projector in a confined space.
  When it is necessary to install in a confined space, install an air conditioning or ventilation system for the space. If ventilation is insufficient, exhaust heat may accumulate and trigger the protection circuit of the projector.

Security

When using this product, implement appropriate security measures to prevent the following:

- Personal information being leaked via this product
- Unauthorized operation of this product by a malicious third party
- Interference or stopping of this product by a malicious third party

Take sufficient security measures. (➡ page 69)

- Make your PIN code as difficult to guess as possible.
- Change your PIN code periodically.
- EIKI Industrial and its affiliate companies will never ask you directly for your PIN code. If you are asked directly, do not give your PIN code.
- Be sure to use a secure network with a firewall etc.
- Set a PIN code and set restrictions on the users who can log in.

Disposal

When disposing of the product, ask your local authority or dealer about the correct methods of disposal.
The lamp contains mercury. When disposing of the used lamp unit, ask your nearest local authorities or dealer about proper disposal of the unit.
Dispose of used batteries according to the instructions or your local disposal rule or guidelines.

Cautions on use

■ To achieve a high picture quality

- You achieve a high picture quality by drawing curtains or blinds over windows and turning off any lights near the screen to prevent outside light or light from indoor lamps from shining onto the screen.
- Depending on the conditions, the picture may wobble due to the heated air from the air exhaust port or heated or cooled air from the air conditioner.
  Take care to ensure that neither the exhaust from the projector or other equipment, nor air from any air conditioner blows on the front of the projector.
- The projection lens is heated by the light from the luminous source, making the focus unstable in the period just after switching on. The focus will stabilize after 30 minutes elapsed with the image being projected.

■ Do not touch the surface of the projection lens with your bare hands.

If the surface of the lens is contaminated by fingerprints or dirt, this will be magnified and projected onto the screen, degrading the picture.

■ LCD panel

The LCD panel is precision-made. Note that in rare cases, pixels of high precision could be missing or always lit. This is not a malfunction.
When a still image is projected for a long period, the image may burn in to the LCD panel. In this case, project the white screen from the test patterns (➡ page 74) for at least one hour. Note, however, that it may not always be possible to fully eradicate the burned-in image.

Optical components

If you are using the projecting a high-temperature environment or an environment which is dusty or full of cigarette smoke etc., the replacement cycle for optical components such as the the LCD panel and polarizer may reduce to as little as a year. For more information, please consult your dealer.

Lamp

The projector luminous source is a mercury lamp with high internal pressure.
A high-pressure mercury lamp has the following characteristics.

- The brightness of the lamp will decrease with usage time.
- An impact, scratch, or deterioration with usage may cause the bulb burst loudly or reduce the service life.
- The service life of the lamp varies greatly depending on the individual lamp and usage conditions. In particular, continuous use for periods of 24 hours or longer and frequent on/off switching of the power accelerate deterioration in the lamp and affect the lamp life.
- In rare cases, the lamp burst shortly after starting the projection.
- The risk of bursting increases when the lamp is used beyond its replacement cycle. Make sure to replace the lamp unit consistently. “When to replace the lamp unit” (➡ page 85)
- If the lamp bursts, gas contained in the lamp is released in a form of smoke.
- It is recommend that you store replacement lamp units for contingency.
- It is recommended that you request a qualified technician to replace the lamp unit. Consult your dealer.

Accessories

Make sure that the following accessories are provided with your projector.

Accessory (product name)	Number
Wireless/wired remote control unit (N2QAYA000058)	1
Wired remote control cable (K2KYYY00177)	1
AAA/R03/LR03 battery (for remote control unit)	2
Power cord for LC-XT6 (E) (T0K3K0003--1)	1
Power cord for LC-XT6 (U) (T0K3K0001--1)	1
Computer cable (for D-sub) (T0K3K0013--1)	1
CD-ROM Owner's Manual (TXFQB03ZGM3)	1
CD-ROM PJ Network Manager (T1U13B14102)	1
CD-ROM Real Color Manager Pro (T1U13B58100)	1
Owner's Manual–Basic Guide (TQBJ0487)	1
Color Management Manual (TQBJ0270-1)	1
Lens lock lever fixing bracket*1 (T0STF0039--1)	1 (set)
Spacer*1 (T0SAS0001--)	1 (set)
Lens attachment*1 (T0HLA0045--)	1 (set)

Accessory (product name)	Number
PIN code label	1
Cable tie	3
Power cord holder, power cord cover (T0STF0037--1)	1 (set)
Light-shielding plate-1*1 (T0CRS0008--1)	1 (set)
Light-shielding plate-2*1 (T0CRM0014--1) Ⓛ is inscribed	1 (set)
Light-shielding plate-3*1 (T0CRM0013--1) Ⓢ is inscribed	1 (set)

*1: Used when attaching the lens (optional). (➡ page 106)

Attention

- After unpacking the projector, dispose of the power cord cap and packaging material in an appropriate manner.
- If you lose any of the accessories, consult your dealer.
- The product numbers of accessories and separately sold components are subject to change without notice.
- Store small parts in an appropriate manner, and keep them away from young children.

Precautions for use

■ Contents of CD-ROM

The following contents are stored on the supplied CD-ROM.

Manual/Index (PDF)	Software
● **Owner's Manual–Projector Operations** ● **Owner's Manual–Network Operations** ● **Owner's Manual–PJ Network Manager Operations** ● **Real Color Manager Pro Software Operation Manual**	● **Real Color Manager Pro** ● **PJ Network Manager**

Optional accessories

Optional accessories (product name)	Product No.
Replacement lamp unit	POA-LMP147
Replacement filter	Part No.: T1FTX0069--
Smoke resistant filter	Unit: Part No. AH-38561 / Ref No. NOP-FTU-61EFS Filter: Part No. AH-38323 / Ref No. POA-FIL-160
Input module	AH-72217
Lens	AH-21202, AH-32022, AH-32401, AH-32601, AH-21102, AH-22051, AH-21023, AH-21092, AH-32581

About your projector

Remote control

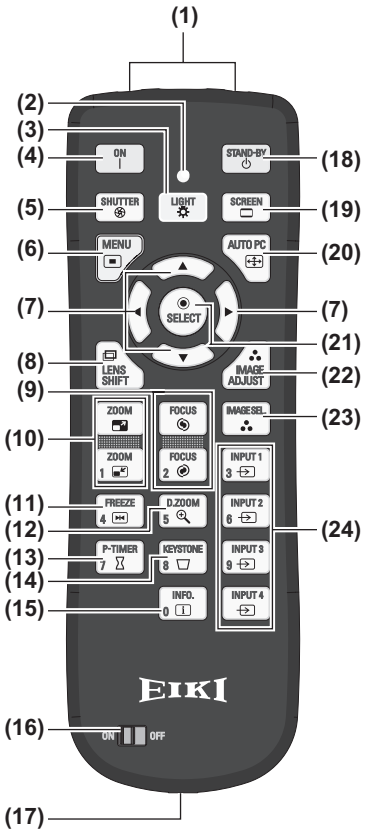

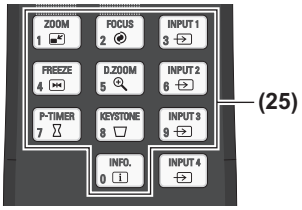

(1) Remote control signal emitters

(2) Remote control indicator
Flashes by pressing any buttons.

(3) <LIGHT> button
Press once to light the control buttons for ten seconds.

(4) Power <ON> button
Starts projection when the main power switch on the projector is set to <|> and in the standby mode.

(5) <SHUTTER> button
Opens and closes the shutter. (➡ page 37)

(6) <MENU> button
Displays the menu screen. (➡ page 40)

(7) ▲▼◀▶ button
Move the cursor on the on-screen menu and control menus.
Also move the image vertically and horizontally in the digital zoom mode or the real mode.

(8) <LENS SHIFT> button
Slides the lens vertically and horizontally to move the position of the projective image vertically and horizontally. (➡ page 35)

(9) <FOCUS> button
Adjusts the focus. (➡ page 36)

(10) <ZOOM> button
Adjusts the zoom of the lens. (➡ page 36)

(11) <FREEZE> button
Temporally freezes the projected image. (➡ page 37)

(12) <D.ZOOM> button
Turns on the digital zoom mode.

(13) <P-TIMER> button
Press the <P-TIMER> button to count the time elapsed from the press of the button or perform a countdown from the set time. (➡ page 39)

(14) <KEYSTONE> button
Corrects the keystone effect. (➡ page 38)

(15) <INFO.> button
Displays state of signals during projection and current settings. (➡ page 39)

(16) <ON>/<OFF> switch
Set to <ON> when using the remote control.
Set to <OFF> when not using the remote control for a long period.

(17) Wired remote control terminal
When the remote control is used as a wired remote control, connect this terminal on the remote control to the <R/C JACK> terminal on the projector.
The remote control requires batteries. (➡ page 23)

(18) Power <STAND-BY> button
Sets the projector to the standby mode when the main power switch on the projector is set to <|> and in the projecting mode.

(19) <SCREEN> button
Selects the size of the projected image.
If you press the button for at least five seconds, the settings of the [Screen] menu return to the factory default settings. (➡ page 39)

(20) <AUTO PC> button
Automatically adjusts synchronization, total number of dots, horizontal shift, and vertical shift. (➡ page 46)

(21) <SELECT> button
Selects item indicated by the cursor on the on-screen menu.
Also used to expand and contract the image in the digital zoom mode. (➡ page 40)

(22) <IMAGE ADJUST> button
Displays the [Image adjust] menu to adjust the image. (➡ page 34)

(23) <IMAGE SEL.> button
Selects the mode from [Image select]. (➡ page 38)

(24) <INPUT 1> - <INPUT 4> buttons
Selects the input signal to project. (➡ page 37)

(25) Number (<0> - <9>) buttons
Used to enter PIN codes and remote control numbers.

About your projector

Attention

- Do not drop the remote control.
- Avoid contact with liquids or moisture.
- Do not attempt to modify or disassemble the remote control.

Note

- The remote control can be used from any distance within about 5 m if pointed directly at the remote control sensor. The remote control is effective from angles of up to ±30° vertically and horizontally, but its range may be reduced.
- If there are any obstacles between the remote control and the remote control sensor, the remote control may not operate properly.
- You can control the projector by reflecting the signal off the screen, but the effective operating range will depend on the characteristics of the screen.
- If the remote control sensor receives strong light such as fluorescent light, the remote control may not operate properly. Place the projector as far as possible from other light sources.

Projector body

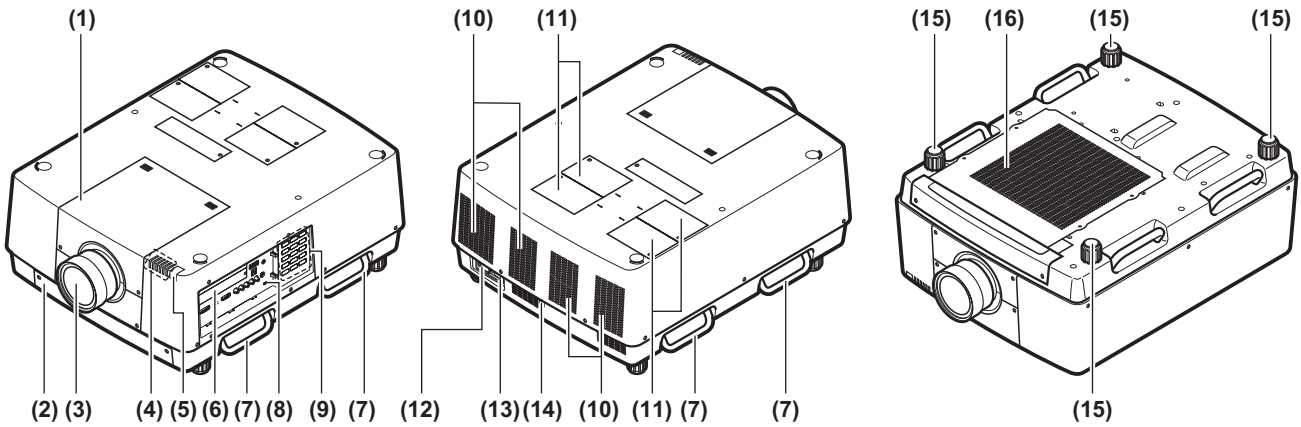

(1) Lens attachment cover

(2) Air filter unit

(3) Lens (optional)

(4) Indicator (➡ page 77)

(5) Remote control sensor (top and front)

(6) Connection terminals (➡ page 22)

(7) Carry handle

(8) Security slot
This security slot is compatible with the Kensington security cables.

(9) Control panel (➡ page 21)

(10) Air exhaust port

(11) Lamp cover
Houses the lamp unit. (➡ page 86)

(12) AC input terminal
Connect the supplied power cord. (➡ page 31)

(13) Main power switch
Turns off/on the main power.

(14) Remote control sensor (rear)

(15) Adjustable feet
Adjust the projection angle. (➡ page 25)

(16) Air intake port

Attention

- Keep your hands and other objects away from the air exhaust port
  - Keep your hands and face away.
  - Do not insert your fingers.
  - Keep away heat-sensitive articles.

Heated air from the air outlet port can cause burns, injuries, or deformations.

Control panel

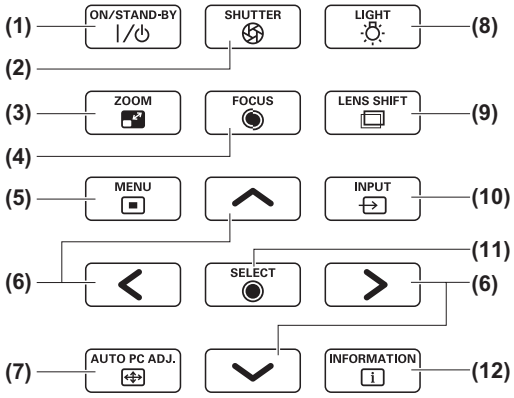

(1) Power <ON/STAND-BY> button
Turns off/on the power when the main power switch on the projector is set to < | >.

(2) <SHUTTER> button
Opens and closes the shutter. Adjusts the shielding of the projection light. (➡ page 37)

(3) <ZOOM> button
Adjusts the zoom of the lens. (➡ page 36)

(4) <FOCUS> button
Adjusts focus. (➡ page 36)

(5) <MENU> button
Displays the menu screen. (➡ page 40)

(6) ▲▼◀▶ buttons
Move the cursor on the on-screen menu and control menus.
Also move the image vertically and horizontally in the digital zoom mode and the real mode.

(7) <AUTO PC ADJ.> button
Automatically adjusts synchronization, total number of dots, horizontal shift, and vertical shift.

(8) <LIGHT> button
Switches on/off the control panel and connection terminals by each press of this button.

(9) <LENS SHIFT> button
Slides the lens vertically and horizontally to move the position of the projective image vertically and horizontally. (➡ page 35)

(10) <INPUT> button
Selects the input signal to project. (➡ page 37)

(11) <SELECT> button
Selects item indicated by the cursor on the on-screen menu.
Also used to expand and contract the image in the digital zoom mode. (➡ page 40)

(12) <INFORMATION> button
Displays state of signals during projection and current settings. (➡ page 39)

Connection terminals

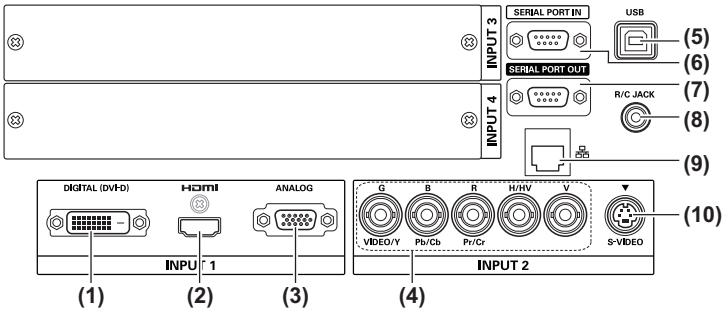

(1) DVI-D input terminal <DIGITAL (DVI-D) IN>
This terminal is for inputting the DVI-D signal.

(2) HDMI input terminal <HDMI IN>
This terminal is for inputting the HDMI signal.

(3) Computer input terminal <ANALOG IN>
This terminal is for inputting an RGB signal.

(4) RGB 5BNC input terminal <R,G,B,H/V,V IN>/<VIDEO IN>/<Y,Pb/Cb,Pr/Cr IN>
This terminal is for inputting the G,B,R,H/HV,V signal, video signal, and Y,Pb/Cb,Pr/Cr signal.

(5) USB terminal <USB>
This terminal is for use by service personnel.

(6) Serial input terminal <SERIAL PORT IN>
This input terminal is compatible with RS-232C and for externally controlling the projector by connecting the projector.

(7) Serial Output terminal <SERIAL PORT OUT>
This terminal is for the signal connected to the serial input terminal.

(8) Remote control terminal <R/C JACK>
This terminal is for connecting the remote control when using it as a wired remote control.

(9) LAN terminal <LAN>
This terminal is for connecting the projector to the network.

(10) S-VIDEO input terminal <S-VIDEO IN>
This terminal is for inputting S-VIDEO signals.

Attention

- Make sure to connect the LAN cable to the indoor equipment.

Using the remote control

Inserting and removing the batteries

1) Open the cover.

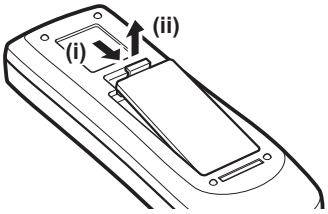

2) Insert the batteries and close the cover.

- Insert the ⊖ side first.

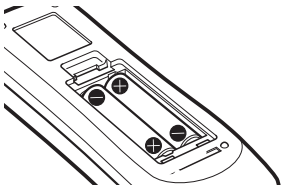

- To remove the batteries, follow the above procedure in reverse.

Setting remote control numbers

When you are using multiple projectors, you can set a remote control number to each projector to allow simultaneous control with a single remote control.
After setting a remote control number of a given projector, specify that projector using the remote control number.

■ Setting method

1) While holding the <MENU> button, press the number (<0> - <9>) buttons (2 digits) to enter the desired remote control number.

- When you release the button, the remote control number will change to the new number.
- To set the remote control number to 09, press <0>, <9> while holding down the <MENU> button.

Note

- The factory default setting is [All]. [All] supports all remote control numbers.
- Set the remote control number of the projector using [Remote control] from the [Setting] menu (➡ page 67).
- To reset the remote control number (to set to [All]), simultaneously hold down **the <MENU> button and the <0> button for at least five seconds.**

Using the remote control as a wired remote control

Connect the <R/C JACK> terminal on the projector body to the wired remote control terminal on the remote control using the remote control cable (commercially available).

- Make sure that the batteries are inserted in the remote control.
- To use the remote control wirelessly, disconnect the remote control cable from the projector and the remote control. When the remote control cable is connected, you cannot use the remote control wirelessly.

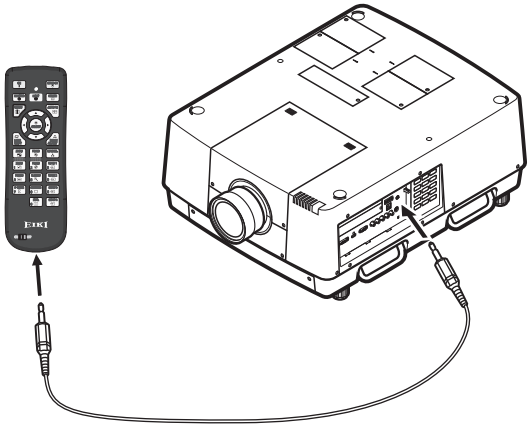

Setting up

Attaching the lens

Before putting the projector in position, attach the lens to the projector body.
First, determine the correct lens for the environment in which you are going to use the projector.
For lens product numbers and lens specifications suitable for the projector, consult your dealer. When attaching or replacing a lens, consult the technical staff or service personnel at a specialist dealer for safety. Do not attempt to attach or replace the lens by yourself. For details, refer to “Notes on attaching the lens” (➡ page 106).

Caution

When setting up the projector after installing a lens, always fit the lens cover to the lens. When carrying or holding the projector body, never hold the lens. Doing so may damage the projector.

Projection method

You can project images vertically and diagonally. You can select rear (➡ page 58) and ceiling (➡ page 58) from the menu. Select the projection method appropriate to the environment.

■ Mounting on the ceiling and projecting forward

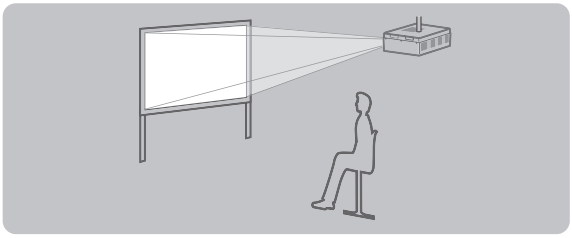

Menu item	Setting
[Ceiling]	[On]
[Rear]	[Off]

■ Setting on a desk/floor and projecting from rear

(Using the translucent screen)

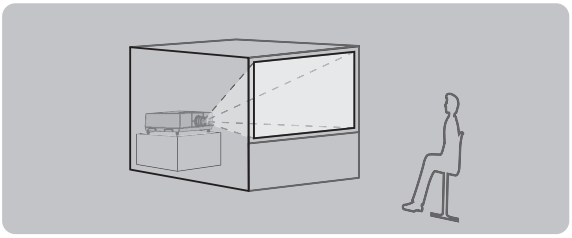

Menu item	Setting
[Ceiling]	[Off]
[Rear]	[On]

■ Mounting on the ceiling and projecting from rear

(Using the translucent screen)

Menu item	Setting
[Ceiling]	[On]
[Rear]	[On]

■ Setting on a desk/floor and projecting forward

Menu item	Setting
[Ceiling]	[Off]
[Rear]	[Off]

Attention

- To get a high picture quality, set up the screen in a location that is, as far as possible, not directly affected by natural light or electric light. Draw the curtains or blinds and turn off the lights.
- When setting up the projector with tilt, do not use the projector at an inclination angle that exceeds ±10° vertically to the horizontal plane. Installing the projector at an inclination angle that exceeds this value may reduce the component life and result in malfunctions.

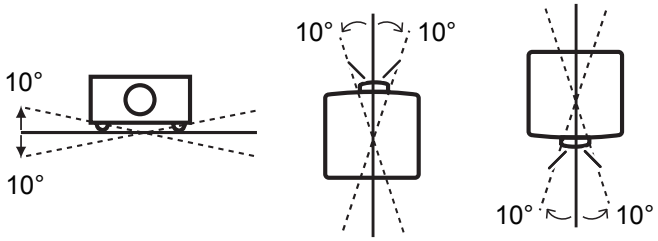

Installation options (optional)

You can install the projector on the ceiling using the optional ceiling mount bracket.
- Use only ceiling mount brackets specified for this projector.
- For details on installation of the projector with the bracket, refer to the installation manual for the ceiling mount bracket.

Attention
- To ensure the projector performance and security, installation of the ceiling mount bracket must be carried out by your dealer or a qualified technician.

Adjustable feet

The adjustable feet can be extended by turning it as shown in the figure. It is retracted by turning it in the opposite direction. This finely adjusts the height and tilt of the projected image.
When the adjustable feet is extended, the projector can be tilted to a maximum of 3°.
(The projection angle can be adjusted vertically.)

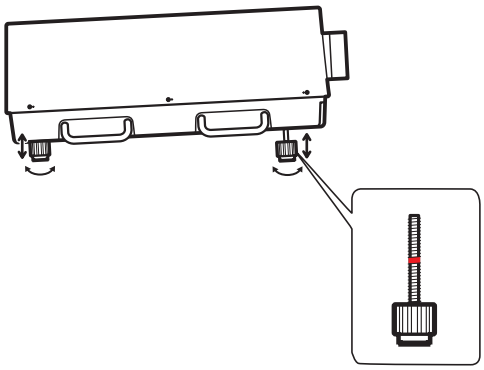

Attention
- Heated air is blowing out from the air exhaust port while the lamp is on. Do not touch the air exhaust port directly when adjusting the adjustable feet.
- If the keystone effect occurs in the projected image, perform [Keystone] (➡ page 57) from the [Screen] menu.

Note
- Do not extend the adjustable feet beyond the red line. Doing so may damage them.
- The vertical and horizontal position of the image can be adjusted using the lens shift function.

Connections

Before connecting to the projector

- Read carefully the instruction manual of the device you intend to connect.
- Turn off the power switch of the device before connecting the cable.
- If a connection cable is not supplied with the device and the optional cable is not available, prepare a connection cable to suit the device.
- Video signals containing too much jitter may cause the images on the screen to randomly wobble. In this case, a time base corrector (TBC) must be connected.
- The projector accepts the following signals: video signals, S-video signals, analog RGB signals (synchronous signals are TTL level), and digital signals.
- Some computer models are not compatible with the projector.
- When connecting a device to the projector using a long cable, it may not be possible to achieve a normal picture without a compensator.
- For details of the video signals supported by the projector, refer to “List of compatible signals” (➡ page 99).

Connecting example: Computers

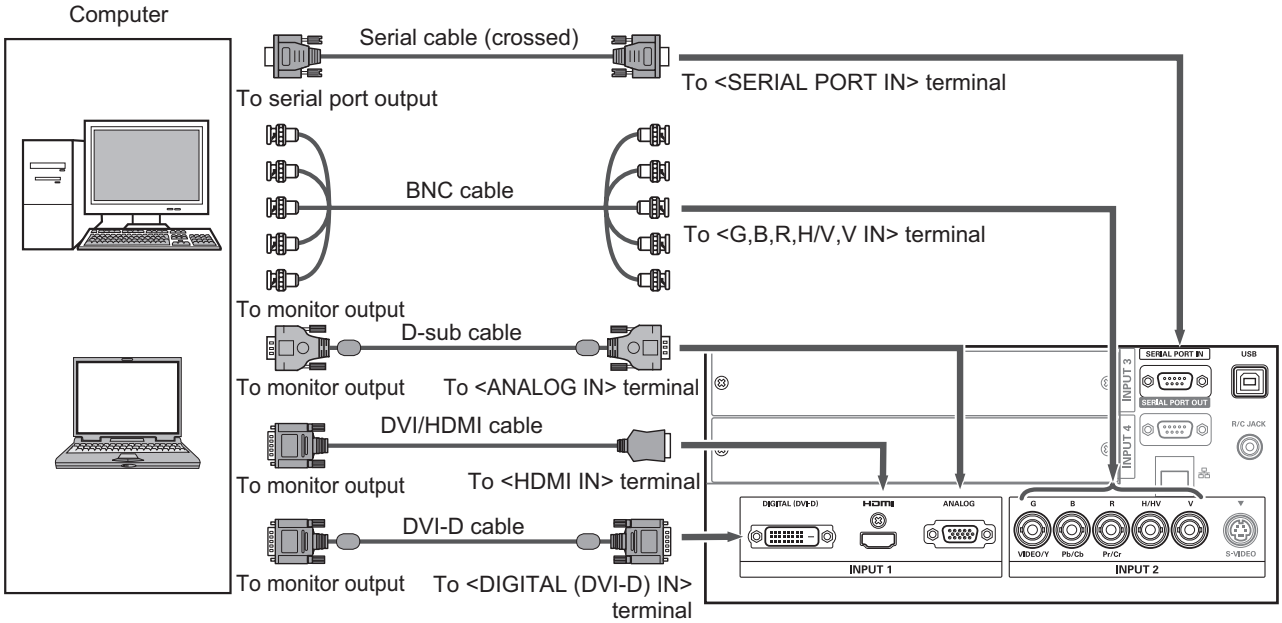

Note

- Use an HDMI High Speed cable that adheres to the HDMI standard. Use of a cable that does not adhere to the HDMI standard, may result in abnormal operation such as cut-out of the image, failure to project, etc.
- The <HDMI IN> terminal can be connected with an external device with a DVI terminal using an HDMI/DVI conversion cable. With some devices, however, the image may not appear. (➡ page 65)
- When the <DIGITAL (DVI-D) IN> terminal is used, normal operation may not be possible with certain devices and the image may not appear.
- The <DIGITAL (DVI-D) IN> terminal (in the digital signal input mode) is compatible only with single link signals.
- For details of RGB signals from computers that the projector supports, refer to “List of compatible signals” (➡ page 99).
- If you operate the projector using the computer with the resume feature (last memory), it may be required to reset the resume feature to operate the projector.
- The <DIGITAL (DVI-D) IN> terminal (in the digital signal input mode) may require the EDID setting depending on the connected device.
- To connect the projector with a computer over a wired LAN, refer to the “Owner's Manual–Network Operations” on the supplied CD-ROM.

Connecting example: AV equipment

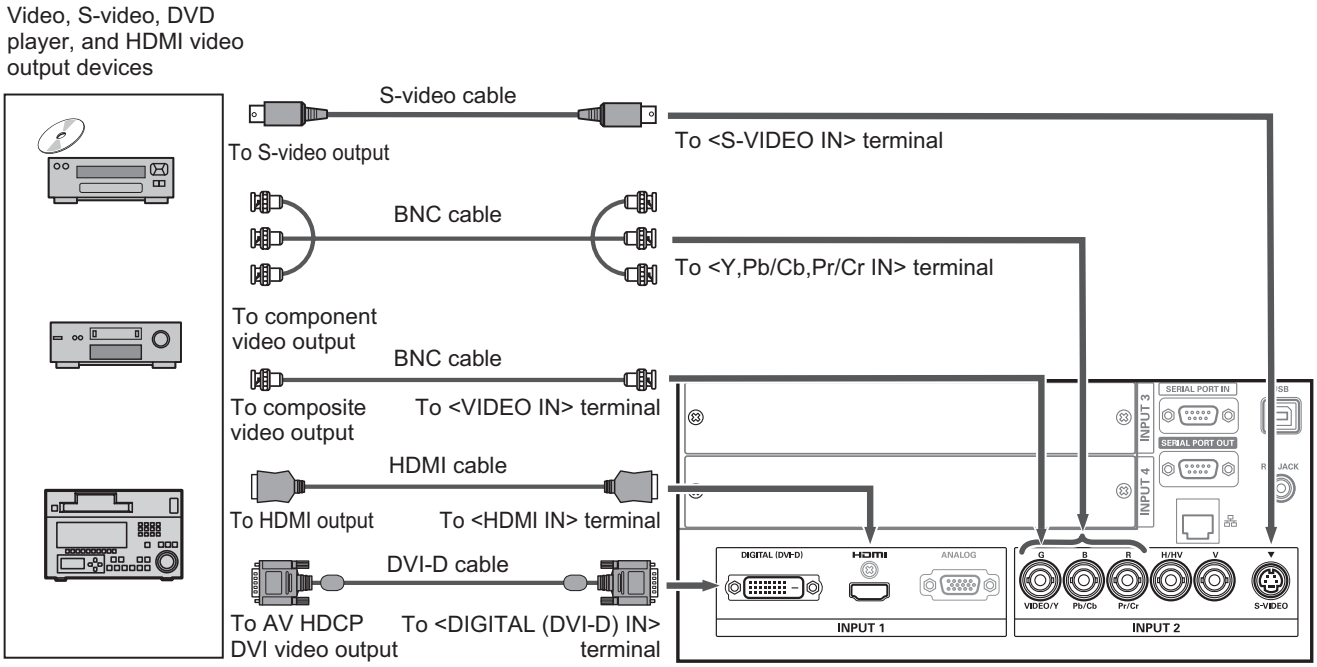

Attention

- Always use one of the following when connecting a VCR.
  - A VCR with built-in time base corrector (TBC)
  - A time base corrector (TBC) between the projector and the VCR
- If burst signals are connected to nonstandard signals, the image may be distorted. In such a case, connect a time base corrector (TBC) between the projector and the device.

Note

- Use an HDMI High Speed cable that adheres to the HDMI standard. Use of a cable that does not adhere to the HDMI standard, may result in abnormal operation such as cut-out of the image, failure to project, etc.
- The <HDMI IN> terminal can be connected with an external device with a DVI terminal using an HDMI/DVI conversion cable. With some devices, however, the image may not appear. (➡ page 65)
- The <DIGITAL (DVI-D) IN> terminal can be connected to HDMI and DVI-D compatible devices, but normal operation may not be possible with certain devices and the image may not appear.
- The <DIGITAL (DVI-D) IN> terminal (in the digital signal input mode) is compatible only with single link signals.

Tying up the cables using cable ties

Keep the cables tidy by fixing the cables connected to the terminals into the cable holders on the projector body.
- The cable ties can be reused. (The tab can be loosened and released.)

■ Loosening the cable ties

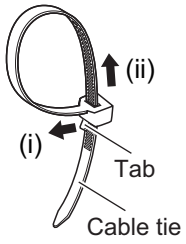

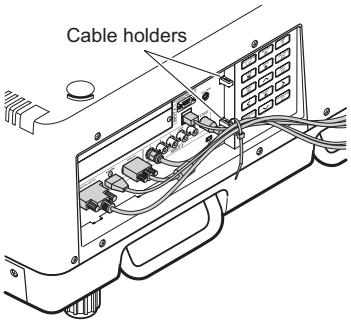

1) Pull the tab in the direction of arrow (i).

2) Pull the tab in the direction of arrow (ii).
- The loop of the cable tie will widen.

Attention

- The following items are cautions when you use the cable tie.
  - Noises may occur for rare occasions.
  - Do not pull the cable forcibly. Doing so may cause disconnection.
  - It is recommended that you allow some slack when the cables are tied.

Caution

When connecting the projector to a computer or an external device, use the power cord supplied with the device and commercially available shielded cables.

Installing an input module (optional)

Installing an input module

Types of input module

Purchase an input module (optional) matching the input signals of the system.

Module name	SD/HD-SDI input module
Module number	AH-72217
Input/output terminal	BNC 2 Input system, BNC 1 Output system
Compatible signal format	SMPTE259M-C standard: 480-60i (59.94 Hz*1), 576-50i (50 Hz) SMPTE260M standard: 1035-60i (60/59.94 Hz*1) SMPTE274M standard: 1080-24psf (48/47.95 Hz*1), 1080-24p (24/23.98 Hz*1), 1080-25psf (50 Hz), 1080-25p (25 Hz), 1080-30psf (60/59.94 Hz*1), 1080-30p (30/29.97 Hz*1), 1080-50i (50 Hz), 1080-60i (60/59.94 Hz*1) SMPTE296M standard: 720-60p (60/59.94 Hz*1), 720-50p (50 Hz)

*1: V-sync frequency 60/59.94 Hz, 48/47.95 Hz, 24/23.98 Hz are automatically distinguished.

Note

- The preceding list shows the signal formats supported by the input modules. The signal formats supported by the projector differ depending on the model. For more information, please consult your dealer.

Installation procedure

Disconnect the power before installing the input module.

1) Remove the slot cover.

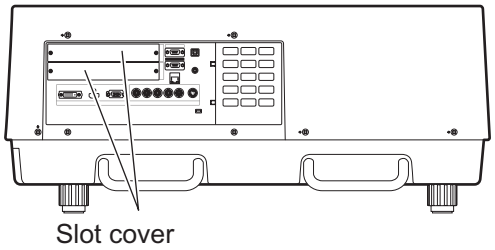

2) Insert the input module.

- Firmly insert the input module into the slot, ensuring that the socket of the connection terminal engages correctly with the plug within the projector body.

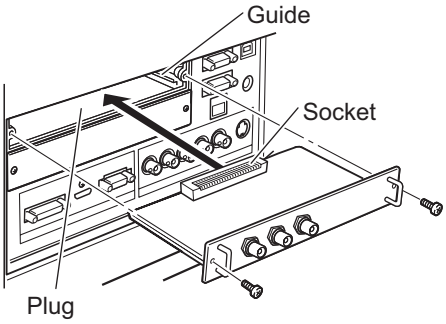

3) Fix the input module in place using two screws.

Attention

- Be sure to tighten the screws. Otherwise, the input module may fall off.
- An improper installation may result in damage to the input module.

Installing an input module (optional)

Using the input module

Consult your dealer before using any of the optional input modules.
When consulting your dealer, be sure to inform them of [Option control No.] of the projector.
[Option control No.] is displayed in the [Information] menu.

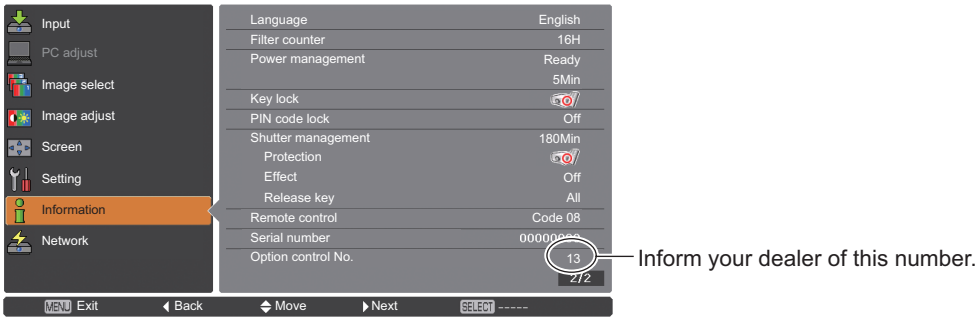

List of compatible signals

The following table specifies the types of signal compatible with the projector.

Screen display mode	Resolution (dots)	Scanning frequency		Dot clock frequency (MHz)
		Horizontal (kHz)	Vertical (Hz)	
D-480i	720 (1 440) x 480	15.734	59.940	27.000
D-576i	720 (1 440) x 576	15.625	50.000	27.000
D-1035i	1 920 x 1 035	33.750	60.000	74.250
D-1080i	1 920 x 1 080	33.750	60.000	74.250
	1 920 x 1 080	28.125	50.000	74.250
D-720p	1 280 x 720	37.500	50.000	74.250
	1 280 x 720	45.000	60.000	74.250
D-1080psf/24	1 920 x 1 080	27.000	48.000	74.250
D-1080psf/25	1 920 x 1 080	28.125	50.000	74.250
D-1080psf/30	1 920 x 1 080	33.750	60.000	74.250
D-1080p	1 920 x 1 080	27.000	24.000	74.250
	1 920 x 1 080	28.125	25.000	74.250
	1 920 x 1 080	33.750	30.000	74.250

Connection of signal to input module

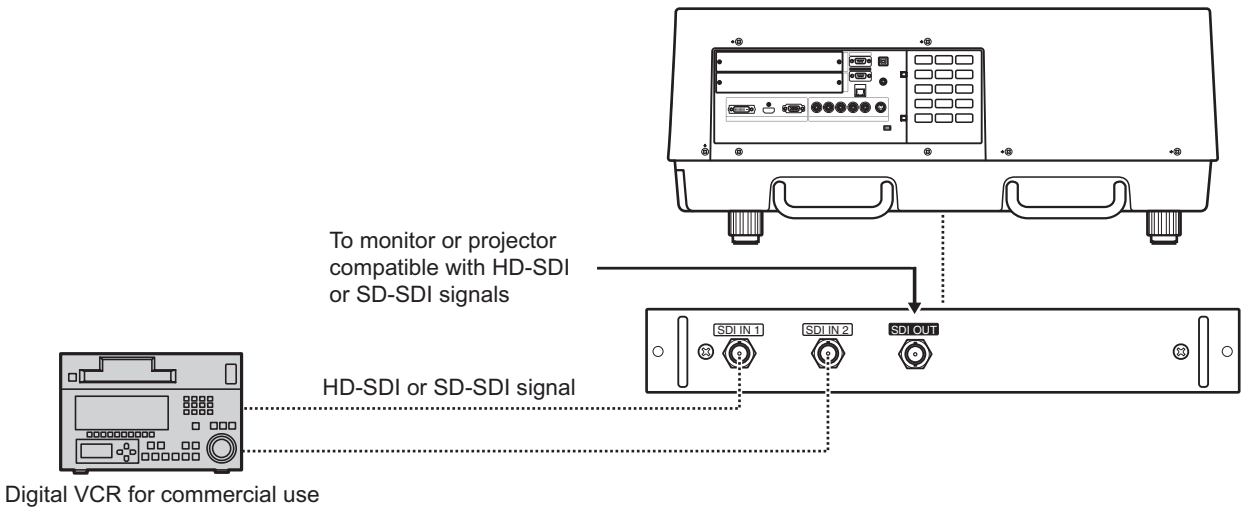

Powering on/off

Connecting the power cord

■ Installation

1) Insert the power cord holder in the holes provided above and below the AC input terminal.

- Push the power cord holder to the left to allow insertion of the power cord.

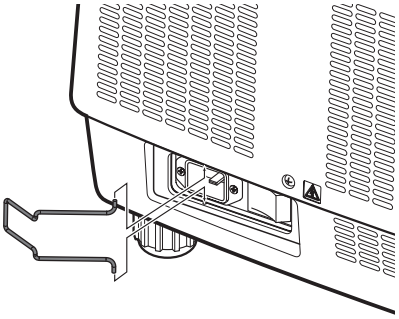

2) Attach the power cord cover to the cord in the direction of (i) and press it firmly in the direction of (ii).

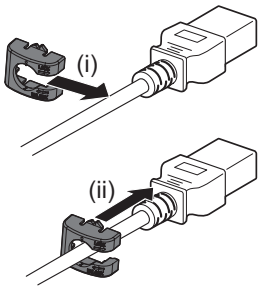

3) Connect the power cord to the AC input terminal.

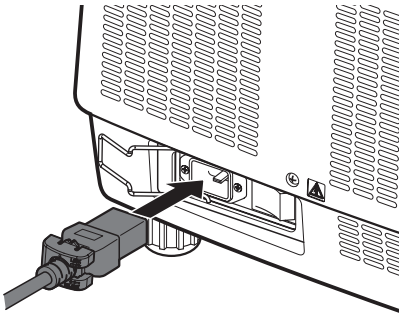

4) Move the power cord holder to secure the power cord.

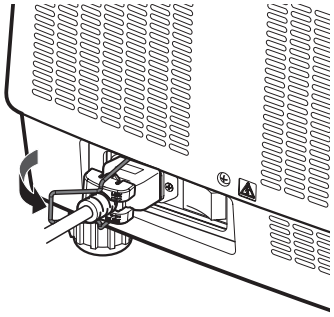

■ Removal

1) Push the power cord holder to the left.

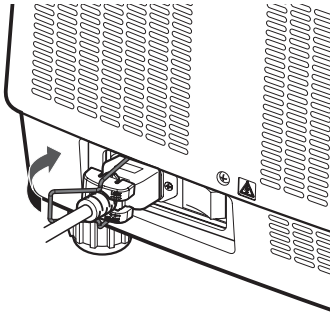

2) Remove the power cord from the AC input terminal.

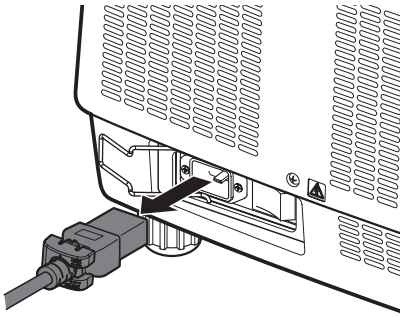

3) Remove the power cord holder.

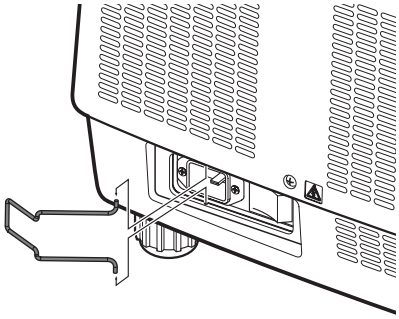

Powering on/off

Power indicator

The power indicator informs you of the power status. Check the status of the power indicator <POWER> and the standby indicator <STAND-BY> before operating the projector.

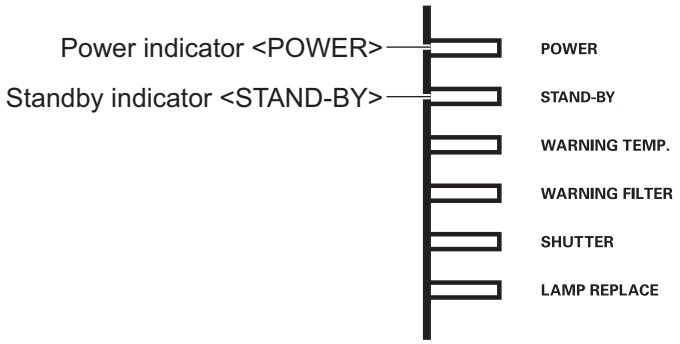

Indicator status		Projector status
Power indicator <POWER> (green)	Standby indicator <STAND-BY> (red)	
Off		The main power is off.
Off	On	The power is off (standby mode).
On	Off	The projector is in the projection mode.
Off	Flashing	The projector is preparing to turn off the power. After a short time, the power will turn off (in standby mode).

Note

- When the projector is preparing to turn off the power (the power indicator <POWER> is off and the standby indicator <STAND-BY> is flashing), the internal fan switches on to cool the projector.
- When the projector is preparing to turn off the power, you cannot switch on the power by pressing the power <ON/STAND-BY> button on the control panel or the power <ON> button on the remote control. If the standby indicator <STAND-BY> is on, you can switch on the power.
- The projector consumes electricity even in the standby mode (the standby indicator <STAND-BY> is on).

Powering on the projector

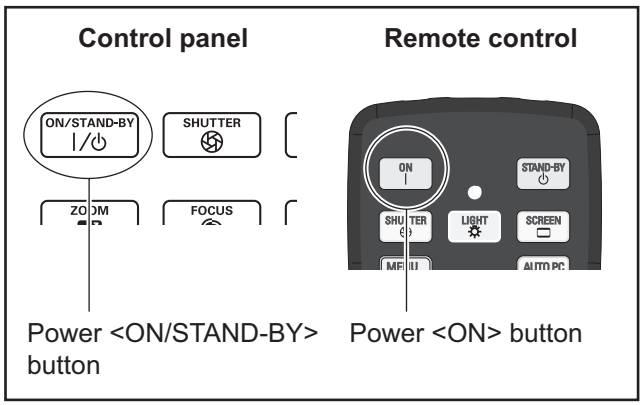

Before turning on the power, remove the lens cover.

1) **Connect the power plug to the outlet.**
(AC 200 V - 240 V 50 Hz/60 Hz)

2) **Press the <|> side of the main power switch to turn on the power.**
- After a moment, the standby indicator <STAND-BY> will go on and the projector will enter the standby mode.

3) **Press the <ON/STAND-BY> button on the control panel or the <ON> button on the remote control.**
- After a moment, an image will be projected and the currently selected input signal and lamp status (➡ page 85) will be displayed for approximately four seconds.

Note

- When [PIN code lock] (➡ page 69) has been set to [On] using [Security] in the [Setting] menu, enter your PIN code.
- The projector will make a noise when the lamp comes on, but this is not a malfunction.
- During projection, the fan rotates, making a sound. The sound may change depending on the ambient temperature, and when the lamp is on, the sound may become loud.
- If the lamp is switched off and immediately on again, the newly projected image may wobble for a few moments. This is due to the lamp characteristics and is not a malfunction.
- When [Direct on] (➡ page 68) of the [Setting] menu is set to [On], the power will come on as soon as you insert the power plug into the outlet or set the main power switch to the <|> side.
- When [Display] (➡ page 59) of the [Setting] menu is set to [On] and [Logo] (➡ page 65) is set to [Off], the countdown will be displayed but the opening display will not be displayed.
- When [Display] (➡ page 59) of the [Setting] menu is set to [Off] or [Countdown off], projection will start as soon as the lamp comes on, regardless of [Logo select] (➡ page 65) setting.
- After turning on the power, notes on [Filter warning] and [Lamp replacement] may be displayed depending on the status of the projector. (➡ page 86)

Making adjustments and selections

It is recommended that the images are projected continuously for at least 30 minutes before the focus is adjusted.

4) **Press the <FOCUS> button to adjust the focus of the image roughly. (➡ page 36)**

5) **Press the <INPUT 1> to <INPUT 4> buttons on the remote control or the <INPUT> button on the control panel to select the input terminal. (➡ page 37)**

6) **Adjust the projection angle. (➡ page 25)**
- Extend the adjustable feet to adjust the projection angle.

7) **Press the <LENS SHIFT> button to adjust the position of the image. (➡ page 35)**

8) **Press the <ZOOM> button to adjust the size of the image to fit the screen. (➡ page 36)**

9) **Press the <FOCUS> button again to adjust the focus.**

10) **Press the <ZOOM> button again to adjust the zoom and the size of the image to fit the screen.**

Powering off the projector

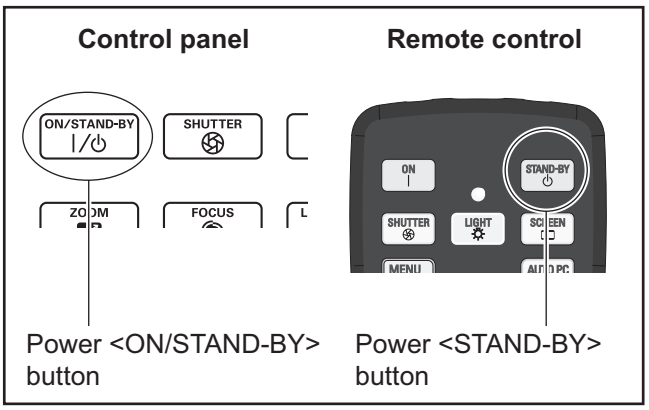

1) Press the power <ON/STAND-BY> button on the control panel or the power <STAND-BY> button on the remote control.

- [Power off ?] is displayed on the screen.
- The screen display will disappear when any button other than the power <ON/STAND-BY> button on the control panel and the power <STAND-BY> button on the remote control is pressed or when approximately four seconds elapse.

2) Press again the power <ON/STAND-BY> button on the control panel or the power <STAND-BY> button on the remote control.

- The lamp goes off and the projection stops.
- The power indicator <POWER> goes off while the cooling fan continues to rotate, and the standby indicator <STAND-BY> flashes.

3) When the standby indicator <STAND-BY> comes on, press the <○> side of the main power switch to turn off the power.

Note

- Do not turn on the power immediately after turning it off. In the cooling state of the luminous lamp after the power is turned off, the lamp may not light up even when the power is turned on. In this case, wait for the standby indicator <STAND-BY> to turn red, and then turn on the power again. Turning on the power while the lamp is still hot may shorten the lamp life.
- When you turn off the power using the power <ON/STAND-BY> button on the control panel or the power <STAND-BY> button on the remote control with the main power switch on the projector body turned on, the projector continues to consume electricity. For details on power consumption, refer to “Power consumption” (➡ page 102).
- Check that key lock is off in the [Security] menu. (➡ page 69)
- If you use the projector for longer than 24 hours, turn off the power every 24 hours and wait for one hour. This will increase the lamp life.

Direct power off function

You can disconnect the power cord, turn off the power by the power breaker switch, etc. without pressing the power <STAND-BY> button on the remote control or the main power switch on the projector.
This is useful in cases where the switch is not easily accessible, such as when the projector is ceiling mounted. This function also provides safety if a power outage occurs or if the power cord is accidentally disconnected from the outlet immediately after turning off the power.

Note

- When the lamp has been cooled by the direct power off function, it sometimes takes longer than usual for the lamp to light up again.

Power management function

The projector has a power management function. If no signal is detected for 30 seconds and no operation is performed on the projector, [No signal] and the timer appear on the screen and a countdown starts.
If the countdown is completed without a signal being input or an operation on the projector, this function works to save power and extend the service life of the lamp.

Note

- The factory default setting is [Off]. For details, refer to [Power management] (➡ page 68).

Projecting

Check the external device connections (➡ page 26) and power cord connections (➡ page 31) and then turn on the power (➡ page 33) to start projection. Select the input signal and adjust the image.

Selecting the input signal

Select an input signal.
The images selected using the <INPUT> button on the control panel or the <INPUT 1> to <INPUT 4> buttons on the remote control are projected. (➡ page 37)

Attention

- Images may not be projected properly depending on the connected device, DVD, video tape, etc. to be played.
- The <INPUT> button on the control panel cannot be used to select input signals. The input signal for each input terminal must be selected in advance using the [Input] menu. If you press the <INPUT> button without having correctly selected the input signal, the projector will not project the image correctly.

Adjusting the image

■ Adjusting the position of the lens

1) Press the <LENS SHIFT> button on the remote control or the control panel.

- [Lens shift] is displayed on the screen for four seconds.

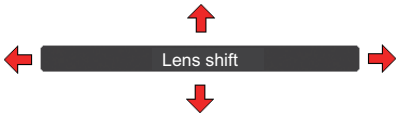

2) While the display appears, press ▲▼◀▶ to move the image horizontally and vertically.

- As you move the image, there is a certain position at which the arrows pointing up, down, left and right turn red. This position is the center for the lens.
- At positions of maximum shift, the arrows disappear.
- The projector stores the setting made using the lens shift function when the power is turned off.
- When the position of the image is shifted, the image may become a little darker.

* The figure below shows an example of when the standard lens is attached.

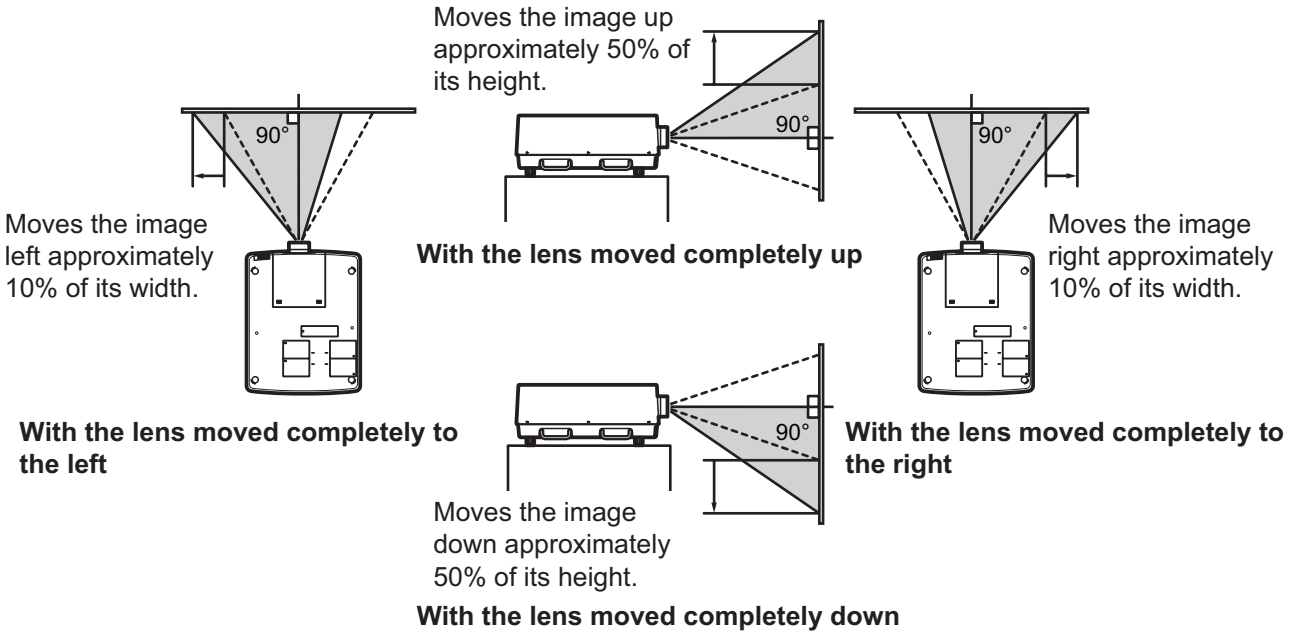

Basic Operation

■ Adjusting the focus and zoom

1) Press the <FOCUS> button and the <ZOOM> button on the remote control or the control panel.

- [Focus] and [Zoom] are displayed on the screen for four seconds.

2) While the display appears, press ▲▼ to adjust the focus and zoom.

Note

- When [Display] is set to [Off], the adjustment screen will not appear.
- It is recommended that the images are projected continuously for at least 30 minutes before the focus is adjusted.
- If the keystone effect occurs, refer to “Correcting the keystone effect” (➡ page 38) for details.

Using the remote control

Using the shutter function

You can fully block the projection light.

button

1) **Press the <SHUTTER> button on the remote control.**
   - This blocks the projection light. The shutter indicator <SHUTTER> lights up in blue.
2) **Press the <SHUTTER> button again.**
   - This opens the shutter and restarts projection. The shutter indicator <SHUTTER> goes off.

Note

- The operations of the shutter differ depending on the settings. Perform the settings using [Shutter] in the [Setting] menu.
- The <SHUTTER> button is also on the control panel.
- If an error message appears when you press the <SHUTTER> button, the button lock is enabled. Check the [Shutter] setting from the [Setting] menu.

Using the freeze function

You can temporarily freeze the projected image regardless of the state of playback in an external device.

button

1) **Press the <FREEZE> button on the remote control.**
   - This freezes the image.
2) **Press the button on the remote control or the control panel.**
   - Releases the frozen image.

Switching the input signal

You can switch the input signal for projection.

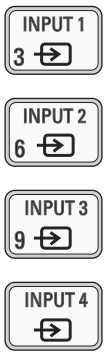

buttons

1) **Press the <INPUT 1> - <INPUT 4> buttons on the remote control.**
   - Each press of the button changes input signal.
   - The <INPUT 3> button and the <INPUT 4> button are only enabled when an input module is inserted.

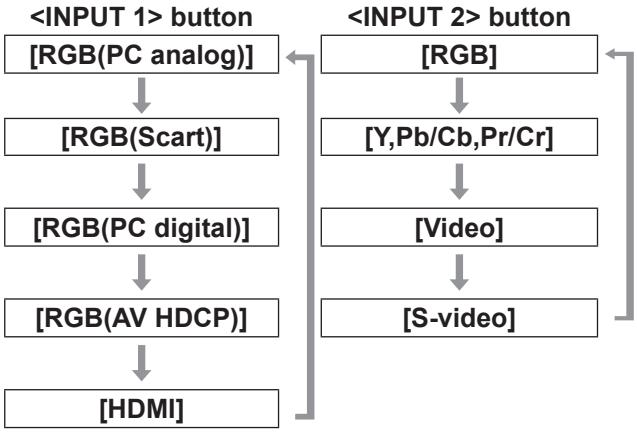

Note

- The signal displayed for the <INPUT 3> button and the <INPUT 4> button changes depending on the type of input module inserted.
- Pressing the <INPUT> button on the control panel changes the signal in the order of [Input 1], [Input 2], [Input 3], and [Input 4].

Correcting the keystone effect

You can correct the keystone effect that occurs when the projector is installed with tilt or when the screen is tilted.

- The amount and range of the correction differ depending on the input signal.
- With certain settings, the image may distort for a moment.
- To achieve the corrected image, the signal undergoes digital compression before projection and lines and text may be altered slightly from those of the original image.
- For details on the correction, refer to [Keystone] in the [Screen] menu.

button

1) Press the <KEYSTONE> button on the remote control.

- Each press of the button switches the display between the standard keystone effect correction display and the corner correction display.

■ Standard keystone effect correction

Corrects the keystone effect vertically and horizontally.

1) While [Keystone] is displayed, press ▲▼◀▶ of the direction in which you want to make the correction.

Note

- Pressing the <KEYSTONE> button on the remote control for at least three seconds while [Keystone] is displayed returns the image to the uncorrected state.

■ Corner correction

Corrects distortion at the corners of the image.

1) While [Keystone] is displayed, press the <SELECT> button and select the corner to correct.

- Each press of the button moves the selected corner clockwise.

2) Press ▲▼◀▶ to correct the distortion.

Note

- Pressing the <KEYSTONE> button on the remote control for at least three seconds while [Keystone] is displayed returns the image to the uncorrected state.

Selecting picture quality mode

Pressing the <IMAGE SEL.> button on the remote control displays the menu for the currently selected [Image select], then each subsequent press of the button changes the mode.

button

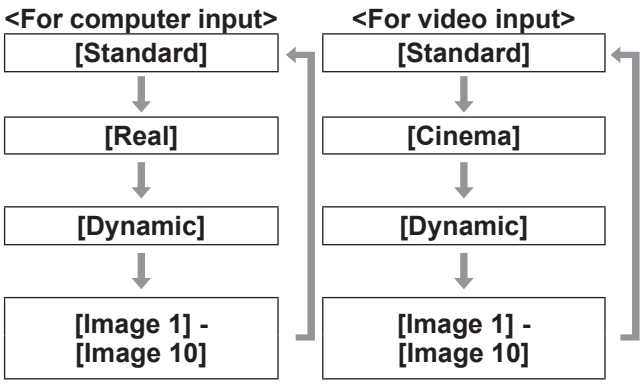

Note

- For details, refer to “[Image select] menu” (➡ page 49).

Adjusting picture quality

Pressing the <IMAGE ADJUST> button on the remote control displays the [Image adjust] menu.

button

1) **Press the <IMAGE ADJUST> button on the remote control.**
2) **Press ▲▼ to select an item, and press the <SELECT> button.**
   - The adjustment menu is displayed.
3) **Press ▲▼ to select the item to adjust, and then press ◀ ▶ to change the setting.**

Note

- For details, refer to "[Image adjust] menu" (➡ page 50).

Screen button

You can change the setting of the [Screen] menu.

button

Pressing the <SCREEN> button on the remote control displays the currently selected [Screen] menu, then each subsequent press of the button changes the mode.

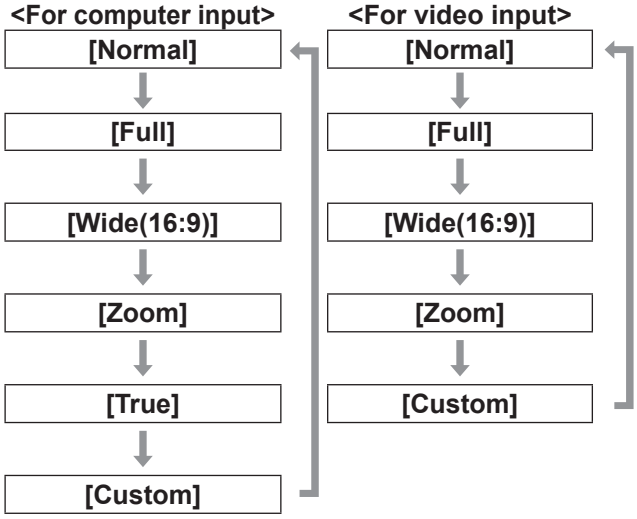

Note

- For details, refer to "[Screen] menu" (➡ page 55).
- If you press and hold the button for at least five seconds, the settings of the [Screen] menu will return to the factory default settings.

Displaying a timer for presentations

When you press the <P-TIMER> button on the remote control, the projector displays either a count of the time elapsed from the press of the button or a countdown.
Pressing the <P-TIMER> button again stops the count and displays the elapsed time up to that point.
Pressing the <P-TIMER> button again restarts the count.

button

Note

- For details, refer to [P-timer] (➡ page 73).
- Pressing the button for at least three seconds resets the time. The count up is returned to "000:00" and the countdown is returned to the time set on the timer.

Checking the settings

You can check the status of signals and the lamp on the screen during projection.

button

Pressing the <INFO.> button on the remote control displays the first page of the information.
Pressing the <INFO.> button again displays the second page of the information.
Pressing the <INFO.> button closes the information.

Note

- For details, refer to "[Information] menu" (➡ page 75).
- To move from the information to another menu, press ▲▼ .
- There is also the <INFORMATION> button on the control panel.

Menu navigation

Navigating through menu

■ Operating procedure

1) Press the <MENU> button.

- The menu is displayed.

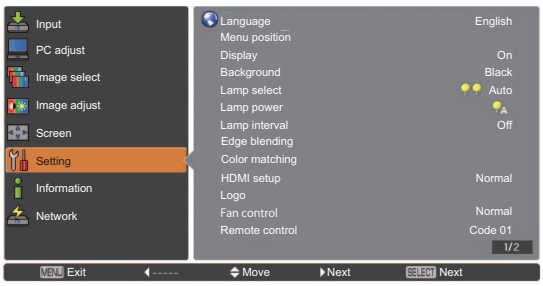

2) Press ▲▼ to select the main menu item.

- Select the item to adjust from [Input], [PC adjust], [Image select], [Image adjust], [Screen], [Setting], [Information], and [Network]. The currently selected item appears with an an orange cursor, and the sub menu of the selected item is displayed to the right-hand side.

3) Press the <SELECT> button.

- The sub menu is displayed, and the items on the sub menu can be selected.
- Alternatively, press ▶ to access the sub menu.

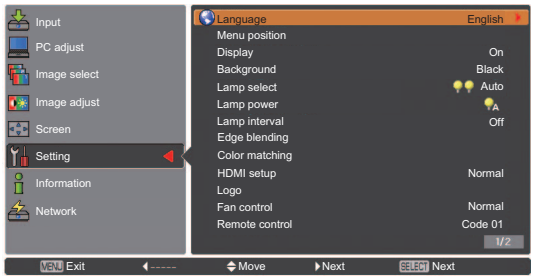

4) Press ▲▼ to select the sub menu item to change, then press the <SELECT> button and ◀ ▶ to change the settings or adjust the parameter values.

- For some sub menus, a further menu (sub menu 2) containing advanced settings will be displayed.
- For items where the setting can be changed or there is a bar scale, the menu screen disappears and, as illustrated below, an adjustment screen for the selected setting (individual adjustment screen) is displayed.

Note

- For certain formats of signal input to the projector, it will not be possible to adjust some items or use some functions. The menu items that cannot be adjusted or used are grayed out, and cannot be selected.
- Some items can be adjusted without a signal input.
- If no operation is performed for approximately four seconds or ten seconds, the adjustment screen is cleared automatically. The time until the adjustment screen is cleared varies depending on the screen.
- For details on the sub menu items, refer to “Sub menu” (➡ pages 41 to 43).
- A guide menu is displayed below the menu. Buttons to be selected and executed are displayed.

(The guide menu of the sub menu is shown below.)

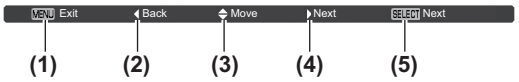

(1) Press the <MENU> button to close the menu.
(2) Press ◀ to return to the main menu.
(3) Press ▲▼ to navigate among the items.
(4) Press ▶ to adjust or select an item.
(5) Press the <SELECT> button to execute an item.

Main menu

The main menu contains the following eight items. When a main menu item is selected, the screen changes to a sub menu selection screen.

	[Input]
	[PC adjust]
	[Image select]
	[Image adjust]
	[Screen]
	[Setting]
	[Information]
	[Network]

Sub menu

The sub menu screen of the item selected from main menu is displayed, and you can set and adjust the various items in the sub menu.

[Input]

Sub menu item	Factory default	Page
[Input 1]	[RGB(PC analog)]	44
[Input 2]	[RGB]	44
[Input 3]	—*1	—
[Input 4]	—*1	—

*1: Differs depending on the input signal.

Note

- The signal displayed for [Input 3] and [Input 4] changes depending on the type of input module inserted.

[PC adjust]

Sub menu item	Factory default	Page
[Auto PC adj.]	—	46
[Fine sync]	—*1	46
[Total dots]	—*1	46
[Position H]	—*1	46
[Position V]	—*1	47
[Current mode]	—*1	47
[Clamp]	—*1	47
[Display area H]	—*1	47
[Display area V]	—*1	47
[Reset]	—	48
[Mode free]	—	48
[Store]	—	48

*1: Differs depending on the input signal.

[Image select]

Details (➡ page 49)

[Image adjust]

Sub menu item	Factory default	Page
[Contrast]	32	50
[Brightness]	32	50
[Color]*1	32	50
[Tint]*1	32	50
[Color management]	—	51
[Color temp.]	[Mid]	52
White balance ([Red]/[Green]/[Blue])	32	52
[Offset]	32	52
[Auto picture control]	[L 1]	52
[Advanced color]	[Auto]	52
[Sharpness]	For computer input: 0 For video input: 15	53
[Gamma]	8	53
[Noise reduction]*1	[On]	53
[Progressive]*1	[On]	53
[Reset]	—	53
[Store]	—	54

*1: Only displayed and selectable when video input is used.

[Screen]

Sub menu item	Factory default	Page
[Normal]	—	55
[Full]	—	55
[Wide(16:9)]	—	55
[Zoom]	—	55
[True]*1	—	55
[Custom]	—	56
[Custom adj.]	—	56
[Digital zoom +]*1	—	56
[Digital zoom -]*1	—	57
[Keystone]	—	57
[Ceiling]	[Off]	58
[Rear]	[Off]	58
[Reset]	—	58

*1: Only displayed and selectable when computer input is used.

[Setting]

Sub menu item	Factory default	Page
[Language]	[English]	59
[Menu position]	—	59
[Display]	[On]	59
[Background]	[Blue]	60
[Lamp select]	[4-Lamps]	60
[Lamp power]	(Auto)	60
[Lamp interval]	[Off]	61
[Edge blending]	[Off]	61
[Color matching]	[Off]	62
[HDMI setup]	[Normal]	65
[Logo]	—	65
[Fan control]	[Normal]	67
[Remote control]	[All]	67
[RC sensor]	[Front & Back]	67
[Power management]	[Off], [Timer] 30 minutes	68
[Direct on]	[Off]	68
[Security]	—	69
[Projector ID]	[All]	70
[Shutter]	—	70
[Video delay control]	[Off]	71
[Closed caption]	[Off]	72
[Filter counter]	—	72
[P-timer]	[Count up]	73
[Test pattern]	—	74
[Factory default]	—	74

[Information]

Details (➡ page 75)

[Network]

Refer to “Owner's Manual–Network Operations”.
Details (➡ page 76)

[Input] menu

Select [Input] from the main menu on the menu screen, and select the item from the sub menu. For operation of the menu screen, refer to "Navigating through menu" (➡ page 40).

- After selecting the item, press ▲▼◀ ▶ to make the setting.

Remote control **Control panel**

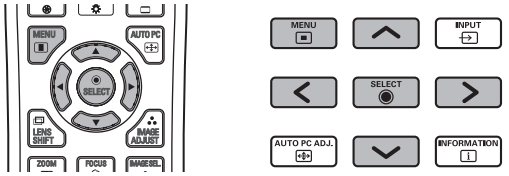

[Input 1]

1) Press ▲▼ to select [Input 1], and press the <SELECT> button.

- The sub menu 2 is displayed.

2) Press ▲▼ to select an item, and press the <SELECT> button.

[RGB(PC analog)]	Select when inputting an analog signal from a computer to the <ANALOG IN> terminal.
[RGB(Scart)]	Select when inputting SCART signal to the <ANALOG IN> terminal.
[RGB(PC digital)]	Select when inputting a digital signal from a computer to the <DIGITAL (DVI-D) IN> terminal.
[RGB(AV HDCP)]	Select when inputting an HDCP-compatible digital signal to the <DIGITAL (DVI-D) IN> terminal.
[HDMI]	Select when inputting an HDMI-compatible digital signal to the <HDMI IN> terminal.

Note

- The SCART21 pin terminal is a video output terminal provided in video players sold mainly in Europe. To view RGB output from this terminal on the projector, connect the SCART21 pin terminal of the video player to the <ANALOG IN> terminal of the projector using a dedicated cable. The RGB SCART signals to be played via the <ANALOG IN> terminal are limited to 480i and 576i RGB signals. Composite video signals cannot be played back.

[Input 2]

1) Press ▲▼ to select [Input 2], and press the <SELECT> button.

- The sub menu 2 is displayed.

2) Press ▲▼ to select an item, and press the <SELECT> button.

[RGB]	Select when inputting an analog signal from a computer to the <G,B,R,H/V,V IN> terminal.
[Y,Pb/Cb,Pr/Cr]	Select when inputting a composite video signal to the <Y,Pb/Cb,Pr/Cr IN> terminal.
[Video]	Select when inputting a composite video signal to the <VIDEO IN> terminal.
[S-video]	Select when inputting an S-video signal to the <S-VIDEO IN> terminal.

Note

- While some RGB signals are automatically recognized, unrecognized RGB signals are detected as "Y,Pb/Cb,Pr/Cr" and it is necessary to select [RGB] from the menu.

[System]

[System] is displayed below the sub menu.

1) Press ▲▼ to select [System] below the sub menu and press the <SELECT> button.
- The sub menu 2 is displayed.

2) Press ▲▼ to select an item and press the <SELECT> button.
- Press the <SELECT> button or ◀ to return to the sub menu.

■ For computer input

[Auto]	When there is no input signal compatible with the signal from a connected computer on the projector, the automatic PC adjustment function works and [Auto] is displayed on the system. If images are not being correctly projected, manually adjust the settings to suit your computer and register in [Store].
—	There is no input signal from the computer. Check the connections.
[Mode 1] - [Mode 10]	Select when inputting a digital signal from a computer to the <DIGITAL (DVI-D) IN> terminal.

■ For video and S-video input

[Auto]	The projector automatically selects the color system of the input signal.
[PAL]/ [SECAM]/ [NTSC]/ [NTSC4.43]/ [PAL-M]/ [PAL-N]	This is a list of supported color systems. The Japanese color system is NTSC. When the quality of the input signal is poor (irregular color, absence of color etc.), and the color system is not selected even when [Auto] is set, select [NTSC].

■ For component input

[Auto]	The projector automatically selects the scanning method of the input signal.
Component video scanning methods ([480p], [576p], [720p], [480i], [576i], [1035i], [1080i], [1080p])	When video is not being played back correctly, select the correct scanning method from the menu.

[PC adjust] menu

Select [PC adjust] from the main menu on the menu screen, and select the item from the sub menu.
For operation of the menu screen, refer to "Navigating through menu" (➡ page 40).

- After selecting the item, press ▲▼◀▶ to make the setting.

Remote control **Control panel**

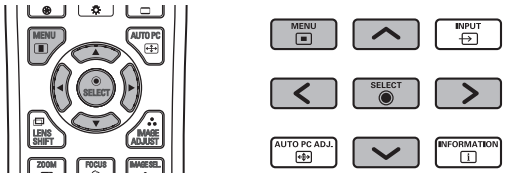

[Auto PC adj.]

Automatically adjusts synchronization, total number of dots, horizontal shift, and vertical shift.

1) Press ▲▼ to select [Auto PC adj.].

2) Press the <SELECT> button.
- This executes automatic adjustment.

Note

- You can also use [Auto PC adj.] by pressing the <AUTO PC> button on the remote control.
- Some computers will be unable to adjust any of [Fine sync], [Total dots], [Position H] or [Position V]. In this case, adjust manually and register in [Store].
- After registering the automatically adjusted settings, you can select that mode using [System] in the [Input] menu.
- The automatic PC adjustment function does not work when any of [480p], [576p], [720p], [480i], [576i], [1035i], [1080i], or [1080p] have been selected using [System] in the [Input] menu.
- With some computers and types of signal, it may not be possible to project the images correctly.

[Fine sync]

Adjusts the projector when there is flicker due to a tracking (synchronization) mismatch.

1) Press ▲▼ to select [Fine sync].

2) Press the <SELECT> button.
- The advanced menu is displayed.
- While the advanced menu is displayed, press ▲▼ to move backwards and forwards between menus.

3) While looking at the screen, press ◀▶ to adjust the setting.
- Press the <SELECT> button to return to the sub menu.

Note

- The adjustment value can be set from 0 to 31.
- For some computers, it may not be possible to completely eliminate the screen flicker.

[Total dots]

Adjusts total number of dots in the horizontal interval.

1) Press ▲▼ to select [Total dots].

2) Press the <SELECT> button.
- The advanced menu is displayed.
- While the advanced menu is displayed, press ▲▼ to move backwards and forwards between menus.

3) While looking at the screen, press ◀▶ to adjust the setting.
- Press the <SELECT> button to return to the sub menu.

[Position H]

Adjusts the horizontal position of the screen.

1) Press ▲▼ to select [Position H].

2) Press the <SELECT> button.
- The advanced menu is displayed.
- While the advanced menu is displayed, press ▲▼ to move backwards and forwards between menus.

3) While looking at the screen, press ◀▶ to adjust the setting.
- Press the <SELECT> button to return to the sub menu.

[Position V]

Adjusts the vertical position of the screen.

1) Press ▲▼ to select [Position V].

2) Press the <SELECT> button.
- The advanced menu is displayed.
- While the advanced menu is displayed, press ▲▼ to move backwards and forwards between menus.

3) While looking at the screen, press ◀ ▶ to adjust the setting.
- Press the <SELECT> button to return to the sub menu.

[Current mode]

Displays the current values of H-sync frequency and V-sync frequency for the currently connected computer.

1) Press ▲▼ to select [Current mode].

2) Press the <SELECT> button or ▶ .
- The advanced menu is displayed.
- Press the <SELECT> button or ◀ to return to the sub menu.

[Clamp]

Adjusts the clamp position.
Use this when a black line is visible in the projected image.

1) Press ▲▼ to select [Clamp].

2) Press the <SELECT> button.
- The advanced menu is displayed.
- While the advanced menu is displayed, press ▲▼ to move backwards and forwards between menus.

3) While looking at the screen, press ◀ ▶ to adjust the setting.
- Press the <SELECT> button to return to the sub menu.

[Display area H]

Adjusts the horizontal resolution.

1) Press ▲▼ to select [Display area H].

2) Press the <SELECT> button.
- The advanced menu is displayed.
- While the advanced menu is displayed, press ▲▼ to move backwards and forwards between menus.

3) While looking at the screen, press ◀ ▶ to adjust the setting.
- Press the <SELECT> button to return to the sub menu.

Note
- You cannot adjust [Display area H] when any of [480p], [576p], [720p], [480i], [576i], [1035i], [1080i], or [1080p] have been selected using [System] in the [Input] menu.

[Display area V]

Adjusts vertical resolution.

1) Press ▲▼ to select [Display area V].

2) Press the <SELECT> button.
- The advanced menu is displayed.
- While the advanced menu is displayed, press ▲▼ to move backwards and forwards between menus.

3) While looking at the screen, press ◀ ▶ to adjust the setting.
- Press the <SELECT> button to return to the sub menu.

Note
- You cannot adjust [Display area V] when any of [480p], [576p], [720p], [480i], [576i], [1035i], [1080i], or [1080p] have been selected using [System] in the [Input] menu.

[PC adjust] menu

[Reset]

The setting returns to its value before adjustment .

1) Press ▲▼ to select [Reset].

2) Press the <SELECT> button.

3) Select [Yes], and press the <SELECT> button.

- The setting returns to the value before adjustment.
- Select [No] and press the <SELECT> button to return to the sub menu.

[Mode free]

Deletes the values registered in [Store].

1) Press ▲▼ to select [Mode free].

2) Press the <SELECT> button or ▶ .

- The registered content of each mode is displayed in the sub menu 2.

3) Press ▲▼ to select the mode to delete.

4) Press the <SELECT> button.

5) Select [Yes], and press the <SELECT> button.

- The selected mode is deleted and the projector returns to the sub menu 2.
- Select [No] and press the <SELECT> button to return to the sub menu 2.

[Store]

Registers the adjusted values in [Store].

1) Press ▲▼ to select [Store].

2) Press the <SELECT> button or ▶ .

- The registered content of each mode is displayed in the sub menu 2.

3) Press ▲▼ to select the mode to register.

4) Press the <SELECT> button.

5) Select [Yes], and press the <SELECT> button.

- The selected mode is registered and the projector returns to the sub menu 2.
- Select [No] and press the <SELECT> button to return to the sub menu 2.

[Image select] menu

Select [Image select] from the main menu on the menu screen, and select the item from the sub menu.
For operation of the menu screen, refer to "Navigating through menu" (➡ page 40).

- After selecting the item, press ▲▼◀ ▶ to make the setting.

Remote control

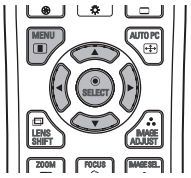

Control panel

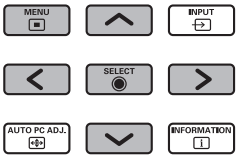

- You can also display sub menus using the <IMAGE SEL.> button on the remote control.

Adjusting the picture quality

Adjusts the picture quality of the projected image to suit the environment in which you are using the projector.

■ [Standard]

Resets the [Image adjust] menu items to the factory default settings.

■ [Real]

In this mode, intermediate settings are adjusted to be brighter, improving the view in bright locations.

- This mode can only be selected for computer inputs.

■ [Cinema]

Emphasizes gradation, making this mode suitable for viewing movies.

- This mode can only be selected for video or component inputs.

■ [Dynamic]

Gives picture with stronger contrast than [Standard].

■ [Image 1] - [Image 10]

Calls up picture quality settings set manually using the [Image adjust] menu.

- Images can be registered with both computer inputs and video inputs.

[Image adjust] menu

Select [Image adjust] from the main menu on the menu screen, and select the item from the sub menu.
For operation of the menu screen, refer to "Navigating through menu" (➡ page 40).

- After selecting the item, press ▲▼◀▶ to make the setting.

Remote control **Control panel**

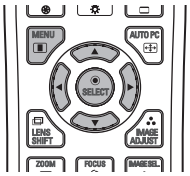

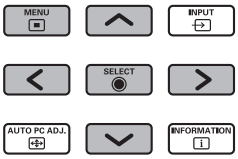

- You can also display sub menus using the <IMAGE ADJUST> button on the remote control.

[Contrast]

1) Press ▲▼ to select [Contrast].

2) Press the <SELECT> button.
- The advanced menu is displayed.
- While the advanced menu is displayed, press ▲▼ to move backwards and forwards between menus.

3) While looking at the screen, press ◀▶ to adjust the setting.

Operation	Adjustment	Range
Press ▶ .	Makes the contrast stronger.	Maximum value 63
Press ◀ .	Makes the contrast weaker.	Minimum value 0

[Brightness]

1) Press ▲▼ to select [Brightness].

2) Press the <SELECT> button.
- The advanced menu is displayed.
- While the advanced menu is displayed, press ▲▼ to move backwards and forwards between menus.

3) While looking at the screen, press ◀▶ to adjust the setting.

Operation	Adjustment	Range
Press ▶ .	The brightness increases.	Maximum value 63
Press ◀ .	The brightness decreases.	Minimum value 0

[Color]

This setting can only be adjusted for video or component inputs.

1) Press ▲▼ to select [Color].

2) Press the <SELECT> button.
- The advanced menu is displayed.
- While the advanced menu is displayed, press ▲▼ to move backwards and forwards between menus.

3) While looking at the screen, press ◀▶ to adjust the setting.

Operation	Adjustment	Range
Press ▶ .	Makes the image darker.	Maximum value 63
Press ◀ .	Makes the image lighter.	Minimum value 0

[Tint]

This setting can only be adjusted for video or component inputs.

1) Press ▲▼ to select [Tint].

2) Press the <SELECT> button.
- The advanced menu is displayed.
- While the advanced menu is displayed, press ▲▼ to move backwards and forwards between menus.

3) While looking at the screen, press ◀▶ to adjust the setting.

Operation	Adjustment	Range
Press ▶ .	Emphasizes green.	Maximum value 63
Press ◀ .	Emphasizes purple.	Minimum value 0

[Color management]

Adjusts the color of the projected image as desired.

1) **Press ▲▼ to select [Color management].**
2) **Press the <SELECT> button.**

■ Displaying the [COLOR SELECTION] menu

1) **Press the <SELECT> button.**
   - The image is paused and a colorless cursor appears in the center of the screen.
2) **Press ▲▼◀▶ to move the cursor over the color to adjust, and press the <SELECT> button.**
3) **The cursor becomes that color and [COLOR SELECTION] menu is displayed.**

■ Adjusting the color of the [COLOR SELECTION] menu

1) **Press ▲▼◀▶ to move the cursor to the center of [COLOR], and press the <SELECT> button.**
2) **Press ▲▼◀▶ to move the cursor over the color to adjust.**
3) **After adjusting to the desired color, press the <SELECT> button.**
   - The screen moves to [GAMMA] adjustment.
4) **Press ▲▼◀▶ to select the color to display after adjustment, then press the <SELECT> button.**
   - The cursor moves to [LIST].
5) **Press the <SELECT> button with the cursor on [LIST].**
   - This registers the adjusted color.

[LIST]	Displays [COLOR MANAGEMENT LIST].
[COLOR M.]	Cancels the adjustment and returns the cursor to the colorless state.
[MENU]	Ends the display of [COLOR MANAGEMENT LIST].

6) **[COLOR MANAGEMENT LIST] is displayed.**
   - You can check whether the registered color has been stored.

■ [COLOR MANAGEMENT LIST] operations

- **Re-adjusting stored colors**

1) **Press ▲▼ to select the color to re-adjust.**
2) **Press the <SELECT> button to return to the [COLOR SELECTION] menu.**
   - You can re-adjust the color.

- **Deleting stored colors**

1) **Press ▲▼ to select the color to delete.**
2) **Press ◀▶ to move the cursor onto the [DEL] checkbox.**
3) **Press the <SELECT> button.**
4) **Select [Yes], and press the <SELECT> button.**
   - The registered color will be deleted.

[ALL DEL]	Deletes all stored items on the list.
[MENU]	Ends the display of [COLOR MANAGEMENT LIST], and returns to the [Image adjust] menu.
[COLOR M.]	Stores the adjustment. A new colorless cursor is displayed and you can continue to make adjustments.

[Color temp.]

1) **Press ▲▼ to select [Color temp.].**
2) **Press the <SELECT> button.**
   - The advanced menu is displayed.
   - While the advanced menu is displayed, press ▲▼ to move backwards and forwards between menus.
3) **While looking at the screen, press ◀ ▶ to adjust the setting.**

Operation	Adjustment	Range
Press ▶ .	Makes the color temperature higher.	[XLow]-[Low]-[Mid]-[High]
Press ◀ .	Makes the color temperature very low.	

Note

- [XLow] (emphasize red) - [High] (emphasize blue)
- Note that adjusting this item will also change the white balance setting.
- [Adj.] is displayed when you adjust the white balance (any of [Red], [Green], and [Blue]).

White balance ([Red]/[Green]/[Blue])

1) **Press ▲▼ to select [Red] (or [Green] or [Blue]).**
2) **Press the <SELECT> button.**
   - The advanced menu is displayed.
   - While the advanced menu is displayed, press ▲▼ to move backwards and forwards between menus.
3) **While looking at the screen, press ◀ ▶ to adjust the setting.**

Operation	Adjustment	Range
Press ▶ .	Weakens the color.	Maximum value 63
Press ◀ .	Deepens the color.	Minimum value 0

[Offset]

1) **Press ▲▼ to select [Offset].**
2) **Press the <SELECT> button or ▶ .**
   - The sub menu 2 is displayed.
3) **Press ▲▼ to select [Red] (or [Green] or [Blue]).**
4) **Press the <SELECT> button.**
5) **While looking at the screen, press ◀ ▶ to adjust the setting.**

[Red]	Minimum value 0 - maximum value 63
[Green]	Minimum value 0 - maximum value 63
[Blue]	Minimum value 0 - maximum value 63

[Auto picture control]

Emphasizes the dark parts of the projected image.

1) **Press ▲▼ to select [Auto picture control].**
2) **Press the <SELECT> button.**
3) **Press ◀ ▶ to switch the setting.**
   - The setting will change as follows each time you press the button.

[Off] ⟷ **[L 1]** ⟷ **[L 2]**

- The effect is strongest with [L 2].

[Advanced color]

Sets the operation of the color control device that independently controls the quantity of yellow light.

1) **Press ▲▼ to select [Advanced color].**
2) **Press the <SELECT> button.**
3) **Press ◀ ▶ to switch the setting.**
   - The setting will change as follows each time you press the button.

[Off] ⟷ **[Auto]**

- The white balance may change depending on the image.

[Sharpness]

1) Press ▲▼ to select [Sharpness].

2) Press the <SELECT> button.
- The advanced menu is displayed.
- While the advanced menu is displayed, press ▲▼ to move backwards and forwards between menus.

3) While looking at the screen, press ◀ ▶ to adjust the setting.

Operation	Adjustment	Range
Press ▶ .	The sharpness increases.	Maximum value 31
Press ◀ .	The sharpness decreases.	Minimum value 0

[Gamma]

1) Press ▲▼ to select [Gamma].

2) Press the <SELECT> button.
- The advanced menu is displayed.
- While the advanced menu is displayed, press ▲▼ to move backwards and forwards between menus.

3) While looking at the screen, press ◀ ▶ to adjust the setting.

Operation	Adjustment	Range
Press ▶ .	Brightens the intermediate gradations.	Maximum value 15
Press ◀ .	Darkens the intermediate gradations.	Minimum value 0

[Noise reduction]

Reduces noise when viewing old video or other images affected by noise.

1) Press ▲▼ to select [Noise reduction].

2) Press the <SELECT> button.

3) Press ◀ ▶ to switch the setting.
- The setting will change as follows each time you press the button.

[Off] ⟷ [On]

[Progressive]

Can be set for video input signals of 480i, 576i, 1035i, and 1080i.

1) Press ▲▼ to select [Progressive].

2) Press the <SELECT> button.

3) Press ◀ ▶ to switch the setting.
- The setting will change as follows each time you press the button.

[Off] ⟷ [On] ⟷ [Film]

- Set to [Off] when video with a lot of movement is affected by flickers or horizontal lines.
- [Film] enables playback of 3-2 pull down/2-2 pull down images on the projector without loss of picture quality in the images.
- When switching, the image will distort for a moment.

[Reset]

The setting returns to its value before adjustment.

1) Press ▲▼ to select [Reset].

2) Press the <SELECT> button or ▶ .

3) Select [Yes], and press the <SELECT> button.
- The setting returns to its value before adjustment.
- Select [No] and press the <SELECT> button to return to the sub menu.

[Store]

1) **Press ▲▼ to select [Store].**
2) **Press the <SELECT> button or ▶ .**
   - The registered content of each mode is displayed in the sub menu 2.
3) **Press ▲▼ to select the mode to register.**
   - [Image 1] - [Image 10]
4) **Press the <SELECT> button.**
5) **Select [Yes], and press the <SELECT> button.**
   - The selected mode is registered and the projector returns to the sub menu 2.
   - Select [No] and press the <SELECT> button to return to the sub menu 2.

Note

- The adjusted item is registered and stored in [Store].
- With [Store], you can store both computer inputs and video inputs.

[Screen] menu

Select [Screen] from the main menu on the menu screen, and select the item from the sub menu.
For operation of the menu screen, refer to "Navigating through menu" (➡ page 40).

- After selecting the item, press ▲▼◀ ▶ to make the setting.

Remote control **Control panel**

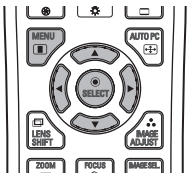

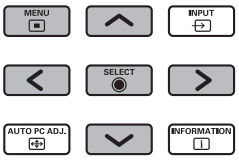

- You can also display sub menus using the <SCREEN> button on the remote control.

[Normal]

Displays the maximum allowable size while retaining the aspect ratio of the input signal.

1) Press ▲▼ to select [Normal].

2) Press the <SELECT> button.

[Full]

Displays the full screen size.

- When there is no input signal, this item is grayed out and cannot be selected.

1) Press ▲▼ to select [Full].

2) Press the <SELECT> button.

[Wide(16:9)]

Displays in widescreen with aspect ratio of 16:9.

- When there is no input signal this item is grayed out and cannot be selected.

1) Press ▲▼ to select [Wide(16:9)].

2) Press the <SELECT> button.

[Zoom]

Stores the aspect ratio and projects at full panel size.

- When there is no input signal, this item is grayed out and cannot be selected.
- If the image is horizontally wider than the panel the right and left edges will be cropped. If vertically longer than the panel, the top and bottom edges will be cropped.

1) Press ▲▼ to select [Zoom].

2) Press the <SELECT> button.

[True]

Projects the image at the original size.

- This mode can only be adjusted for computer inputs.
- When there is no input signal, this item is grayed out and cannot be selected.

1) Press ▲▼ to select [True].

2) Press the <SELECT> button.

■ When the image size is less than the panel resolution*1

The image is projected in the center of the screen, and [True] is displayed at the top left of the screen.

■ When the image size is same as the panel resolution*1

[True] is displayed at the top left of the screen, but the image is subsequently projected in [Normal] mode.

■ When the image size is larger than the panel resolution*1

[True] is displayed at the top left of the screen, and △ (△▽◁▷) are displayed at the top, bottom, left, and right of the screen.
Press ▲▼◀ ▶ to move the image.

- The arrow in the direction of movement is displayed in red.
- At positions of maximum shift the arrows disappear.

*1: The panel resolution of the projector is 1 024 x 768 dots.

[Custom]

The image is projected using the values registered as [Store] in the [PC adjust] menu.

- When there is no input signal, [Custom] can be selected but the image will be projected in [Normal] mode.

1) Press ▲▼ to select [Custom].

2) Press the <SELECT> button.

[Custom adj.]

Adjusts the horizontal and vertical scale and position.

- When there is no input signal, this item is grayed out and cannot be selected.
- If the input signal is lost during adjustment, the adjustment value is stored and the [Aspect] adjustment screen is cleared.

1) Press ▲▼ to select [Custom adj.], and press ▶ .

- The adjustment screen of the sub menu 2 is displayed.

2) Press ▲▼ to select an item, and press the <SELECT> button.

3) The advanced menu is displayed.

- To adjust [H&V], press the <SELECT> button and adjust on the sub menu 2 screen.
- Press the <SELECT> button for [Common] and [Reset]. Select [Yes] and press the <SELECT> button.
- While the advanced menu is displayed, press ▲▼ to display menus other than [H&V], [Common] and [Reset] in order.

4) Press ◀ ▶ to adjust the setting.

- Press the <SELECT> button to return to the sub menu.

[Scale H]	Adjusts the horizontal scale.
[Scale V]	Adjusts the vertical scale.
[H&V]	When adjusting the vertical and horizontal scale, select [On] to link the vertical and horizontal scales and preserve the aspect ratio of the image. ● As you adjust the numerical value of [Scale H], the numerical value of [Scale V] changes accordingly.
[Position H]	Adjusts the horizontal shift.
[Position V]	Adjusts the vertical shift.
[Common]	Applies the adjusted content to all inputs.
[Reset]	Resets all the adjusted content.

[Digital zoom +]

1) Press ▲▼ to select [Digital zoom +].

2) Press the <SELECT> button or ▶ .

- The menu screen is cleared and [Digital zoom +] is displayed.

3) Press the <SELECT> button.

- Each press of the button enlarges the image.
- Press ▲▼◀ ▶ to move the image.
- The image move function only works when the image size is larger than the panel resolution*1

*1: The panel resolution of the projector is 1 024 x 768 dots.

Note

- When there is no input signal, [Digital zoom +] is grayed out and cannot be selected.
- When [True] is selected, [Digital zoom +] cannot be selected.
- To end the [Digital zoom +] operation, press any button other than the <D.ZOOM>, <SELECT>, and ▲▼◀ ▶ buttons.

[Digital zoom -]

1) Press ▲▼ to select [Digital zoom -].

2) Press the <SELECT> button or ▶ .
- The menu screen is cleared and [Digital zoom -] is displayed.

3) Press the <SELECT> button.
- Each press of the button reduces the image.
- Press ▲▼◀▶ to move the image.
- The image move function only works when the image size is larger than the panel resolution*1

*1: The panel resolution of the projector is 1 024 x 768 dots.

Note
- When there is no input signal, [Digital zoom -] is grayed out and cannot be selected.
- When [True] is selected, [Digital zoom -] cannot be selected.
- When [Custom] is selected, you cannot set [Digital zoom -] to [Normal] or smaller.
- When [Store] registered in the [PC adjust] menu is selected in [System] of the [Input] menu, the image move function of [Digital zoom -] may not work correctly.
- When VGA, SVGA, SXGA, WXGA, or UXGA is selected in [System] of the [Input] menu and the upward [Keystone] adjustment is at the maximum value, [Digital zoom -] may not work correctly.
- To end the [Digital zoom -] operation, press any button other than the <D.ZOOM>, <SELECT>, and ▲▼◀▶ buttons.

[Keystone]

1) Press ▲▼ to select [Digital zoom -].

2) Press the <SELECT> button or ▶ .
- The adjustment screen of the sub menu 2 is displayed.

3) Press ▲▼ to select an item.

■ [Standard]

Corrects the keystone effect vertically and horizontally.

1) Select [Standard], and press the <SELECT> button.
- The menu screen is cleared and [Keystone] is displayed.

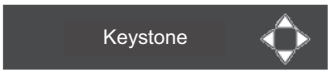

- Press ▲▼◀▶ to correct.

■ [Corner correction]

Corrects distortion at the corners of the image.

1) Select [Corner correction], and press the <SELECT> button.
- The screen to select the corner to correct is displayed.

2) Press the <SELECT> button to select the corner to correct.

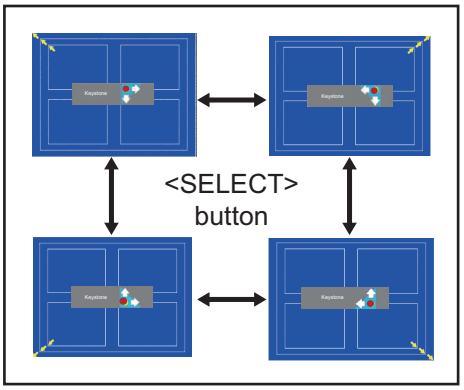

3) Press ▲▼◀▶ to correct the corner.

■ [Corner pattern]

Selects the corner pattern mode displayed during corner correction.

1) Select [Corner pattern], and press the <SELECT> button.

- The setting screen is displayed.

2) Press ▲▼ to select an item.

[Red]	Displays the corner pattern in red.
[White]	Displays the corner pattern in white.
[Blue]	Displays the corner pattern in blue.
[Off]	Clears display of corner pattern.

■ [Store]

Stores the correction state.

1) Select [Store], and press the <SELECT> button.

2) Press ▲▼ to select an item, and press the <SELECT> button.

[Store]	The adjustment state remains in memory even after removing the power cord.
[Reset]	The adjustment state is reset when the power cord is removed.

- You can register only one of [Standard] and [Corner correction].

[Ceiling]

Sets the projection method in accordance with the installation status of the projector.
If the screen display is upside down, select [On].

- This setting is used when the projector is installed using the ceiling mount bracket (optional accessory).

1) Press ▲▼ to select [Ceiling].

2) Press the <SELECT> button.

3) Press ▲▼ to select an item.

[Off] ⟷ [On]

[Rear]

Sets the projection method in accordance with the installation status of the projector.
If the screen display has flipped, select [On].

1) Press ▲▼ to select [Rear].

2) Press the <SELECT> button.

3) Press ▲▼ to select an item.

[Off] ⟷ [On]

[Reset]

The setting returns to its value before adjustment .

1) Press ▲▼ to select [Reset].

2) Press the <SELECT> button.

3) Select [Yes], and press the <SELECT> button.

- The setting returns to its value before adjustment.
- Select [No] and press the <SELECT> button to return to the sub menu.

[Setting] menu

Select [Setting] from the main menu on the menu screen, and select the item from the sub menu.
For operation of the menu screen, refer to "Navigating through menu" (➡ page 40).

- After selecting the item, press ▲▼◀▶ to make the setting.

Remote control **Control panel**

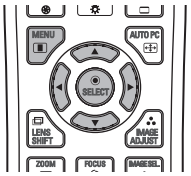

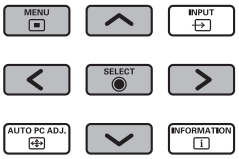

[Language]

Switches the display language.

1) Press ▲▼ to select [Language].

2) Press the <SELECT> button or ▶ .

- The sub menu 2 is displayed.
- Ten languages are available (English, German, French, Italian, Spanish, Portuguese, Russian, Chinese, Korean, and Japanese).

3) Press ▲▼ to select an item.

[Menu position]

Adjusts the display position of the on-screen menu.

1) Press ▲▼ to select [Menu position].

2) Press the <SELECT> button.

- Arrows are displayed on the sub menu 2. Press ▲▼◀▶ to adjust the position.
- At positions of maximum shift the arrows disappear.

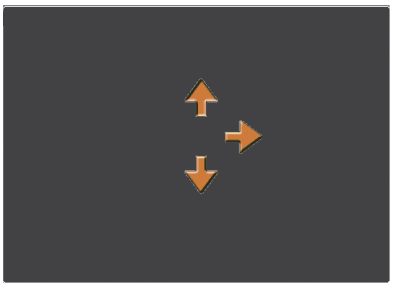

[Display]

Sets the display of the on-screen menu.

1) Press ▲▼ to select [Display].

2) Press the <SELECT> button.

3) Press ▲▼ to select an item.

[Off]	The following screen displays appear. ● Menu display ● Display of [Power off ?] when turning off the power ● Timer display when using the presentation timer ● Display of [Please wait ...] in [Auto PC adj.] ● Timer display when using power management ● Arrows displayed when [Menu position] in [Setting] is selected ● Error message displayed when a button is pressed that is not used for the current settings ● △ arrows displayed when the image size is larger than the panel resolution (1 024 x 768 dots) ● Display of [Corner pattern]
[Countdown off]	Makes the projector project immediately after the lamp comes on without displaying the countdown for approximately 20 seconds. ● Select when you want to project the image quickly and it is not important that the projected image is a little dark.
[On]	Shows all screen displays. ● Select when you want to project the image after the projection screen has reached certain level of brightness.

[Background]

Selects the background screen when there is no input signal.

1) Press ▲▼ to select [Background].

2) Press the <SELECT> button.
- ▲▼ are displayed over the sub menu 2.

3) Press ▲▼ to select an item.
- The setting will change as follows each time you press the button.

[Lamp select]

Selects the lamp used for projection.

1) Press ▲▼ to select [Lamp select].

2) Press the <SELECT> button or ▶ .
- The sub menu 2 is displayed.

3) Press ▲▼ to select.
- Press ◀ to return to the sub menu.

■ [4-Lamps]

Turns on four lamps.

1) Select [4-Lamps], and press the <SELECT> button.

2) Select [Yes], and press the <SELECT> button.
- The setting ends and the projector returns to the sub menu 2 screen.
- Select [No] and press the <SELECT> button to return to the sub menu 2.

■ [2-Lamps]

Turns on two lamps.

1) Select [2-Lamps], and press the <SELECT> button.

2) Select [Yes], and press the <SELECT> button.
- The setting ends and the projector returns to the sub menu 2 screen.
- Select [No] and press the <SELECT> button to return to the sub menu 2.

[Auto]	Automatically detects the lamp with the shortest total time, and prioritizes to turn it on.
2 3	Turns on lamp 2 and lamp 3.
1 4	Turns on lamp 1 and lamp 4.

Note
- If a lamp fails as a result of a fault or reaching the end of its service life, the lamp indicator <LAMP REPLACE> on the front of the projector body and the lamp indicator (<LAMP 1 REPLACE> - <LAMP 4 REPLACE>) on the projector body above the failed lamp will flash. An X mark will also appear as the lamp status at the top of the screen.
- When [4-Lamps] is selected and one lamp fails, two diagonally opposed lamps (not including the failed lamp) perform the projection.
  If a further lamp fails, the projection will continue with one lamp.
- When [2-Lamps] is selected and one lamp fails, two diagonally opposed lamps (not including the failed lamp) perform the projection.
  If a further lamp fails, the projection will continue with one lamp.
- If all the lamps fail, the power will switch off. If the power is turned on without replacing the lamps after the duration exceeds 2 200 hours of usage for all lamps, the power automatically turns off after approximately ten minutes to prevent the malfunction of the projector.

[Lamp power]

Sets switching of lamp brightness.
Using the eco mode is recommended if you want to reduce power consumption.

1) Press ▲▼ to select [Lamp power].

2) Press the <SELECT> button.

3) Press ▲▼ to select an item.
- The setting will change as follows each time you press the button.

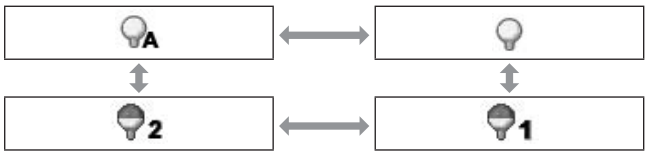

A (Auto)	Sets the brightness automatically using a light-metering circuit.
(Standard)	Operates in certain brightness.
1 (Eco mode 1)	The air intake/exhaust decreases compared to 2, and the sound of the fan becomes lower.
2 (Eco mode 2)	The air intake/exhaust increases in comparison to 1, and the fan becomes louder.

[Lamp interval]

Sets the replacement cycle when [Lamp select] is set to [2-Lamps]. After the replacement cycle, the lamp for use is automatically changed.
- The set time here is a guideline time.

1) Press ▲▼ to select [Lamp interval].

2) Press the <SELECT> button.

3) Press ▲▼ to select an item.

[Off]	Does not change lamps.
[24 H]/ [200 H]/ [500 H]/ [1000 H]/ [2000 H]	Changes lamps in the set intervals. ● When the set time is reached, the projector lights a lamp, giving priority to the lamp with the shortest total usage time.

[Edge blending]

Makes it less easy to see the join between screens when multiple screens are used.

1) Press ▲▼ to select [Edge blending].

2) Press the <SELECT> button.
- Displays [Edge blending] setting screen.

3) Press ▲▼ to select [Edge blending].

4) Press the <SELECT> button.

5) Press ▲▼ to select [On].
- When not performing [Edge blending], select [Off]. Items other than [Back] will be grayed out and cannot be selected.

6) Press the <SELECT> button.
- The panel edge is displayed in green, changing to red when the setting value for the edge blending width is 1 or larger.

Note
- Even when the [Edge blending] setting screen is displayed, if you press the <ZOOM> button, the <FOCUS> button, the <LENS SHIFT> button, or the <SHUTTER> button, the setting screen is cleared and the selected function is given priority. On completion of the function, the projector returns to the setting screen.
- The join between screens may stand out with certain types of image. Reducing the value of [Contrast] in the [Image adjust] menu may make the join look more natural.

■ To adjust the blending start position and blending width

1) Press ▲▼ to select the location ([Start]/[Width] of [Left]/[Right]/[Top]/ [Bottom]) to be corrected.

[Start]	Sets the blending start position. ● The frame (green) moves as you change the numerical value.
[Width]	Adjusts the blending width. ● The red line moves as you change the numerical value.

2) Press the <SELECT> button.

3) Press ▲▼ to change the value, and press ◀ ▶ to move between digits.
- The numerical values can also be entered using the number (<0>-<9>) buttons of the remote control.
- Press the <SELECT> button to end the edit mode.

4) Press the <SELECT> button.

Note
- [Left] and [Right] adjustable value: 0 - 512
- [Top] and [Bottom] adjustable value: 0 - 384

■ To adjust the black level

Adjusts the black level in the image.

1) Press ▲▼ to select [Black level].

2) Press the <SELECT> button.

3) Press ▲▼ to select an item.

[All]	Changes with R/G/B.
[R]/[G]/[B]	Adjusts each color. ● Adjustment value: ±127

To display the test pattern

1) **Press ▲▼ to select [Test pattern].**
2) **Press the <SELECT> button.**
3) **Press ▲▼ to switch the setting.**
   - Press the <SELECT> button to end the edit mode.

[Off]	Clears display of test pattern.
[On]	Displays the test pattern.

Not to display the menus

The settings screen and lines are cleared temporarily.

1) **Press ▲▼ to select [Menu off].**
2) **Press the <SELECT> button.**
   - Press any button to return to the setting screen.

To reset a value during adjustment

The setting returns to its value before adjustment .

1) **Press ▲▼ to select [Reset].**
2) **Press the <SELECT> button.**
   - A screen for confirming whether to reset is displayed.
3) **Select [Yes], and press the <SELECT> button.**
   - The confirmation screen is displayed.
4) **Select [Yes], and press the <SELECT> button.**

To return to the sub menu

Returns projector to the sub menu.

1) **Press ▲▼ to select [Back].**
2) **Press the <SELECT> button.**

[Color matching]

Makes it less easy to see different projector coloring when multiple screens are used.

1) **Press ▲▼ to select [Color matching].**
2) **Press the <SELECT> button.**
   - Displays [Color matching] setting screen.
3) **Press ▲▼ to select [Color matching].**
4) **Press the <SELECT> button.**
5) **Press ▲▼ to select [On].**
   - When not performing [Color matching], select [Off]. Items other than [Advanced color matching] will be grayed out and cannot be selected.
6) **Press the <SELECT> button.**

To adjust the color

1) **Press ▲▼ to select the color to adjust.**
2) **Press the <SELECT> button.**
3) **Press ▲▼ to change the value, and press ◀ ▶ to move between digits.**
   - The numerical values can also be entered using the number (<0>-<9>) buttons of the remote control.
   - The numerical value changes according to the value of [Color temp.] in the [Image adjust] menu.

Color	x	y
[Red]	0.000 - 1.000	0.000 - 1.000
[Green]	0.000 - 1.000	0.000 - 1.000
[Blue]	0.000 - 1.000	0.000 - 1.000
[White]	0.000 - 1.000	0.000 - 1.000

To display the test pattern

1) **Press ▲▼ to select [Auto test pattern].**
2) **Press the <SELECT> button.**
3) **Press ▲▼ to switch the setting.**
   - Press the <SELECT> button to end the edit mode.

[Off]	Clears display of test pattern.
[On]	Displays the test pattern.

To reset a value during adjustment

The setting returns to its value before adjustment. The value returns to the standard value stored in [Store].

1) **Press ▲▼ to select [Reset].**
2) **Press the <SELECT> button.**
   - A screen for confirming whether to reset is displayed.
3) **Select [Yes], and press the <SELECT> button.**
   - The confirmation screen is displayed.
4) **Select [Yes], and press the <SELECT> button.**

To register adjusted content you have changed

Registers values after adjustment.

1) **Press ▲▼ to select [Store].**
2) **Press the <SELECT> button.**
3) **Select [Yes], and press the <SELECT> button.**

To return to the sub menu

Returns projector to the sub menu.

1) **Press ▲▼ to select [Back].**
2) **Press the <SELECT> button.**

[Advanced color matching]

More advanced settings than [Color matching] are possible.

1) **Press ▲▼ to select [Color matching].**
2) **Press the <SELECT> button.**
   - Displays [Color matching] setting screen.
3) **Press ▲▼ to select [Advanced color matching].**
4) **Press the <SELECT> button.**
   - Displays [Advanced color matching] setting screen.
5) **Press ▲▼ to switch the setting.**

[Off] ⟷ [On]

[Off]	When not in [Test pattern] or [Back] mode, this item is grayed out and cannot be selected.
[On]	Sets advanced color matching.

To check the settings

Displays the setting status of [Image adjust].

1) **Press ▲▼ to select [Measured information].**
2) **Press the <SELECT> button.**
   - The measured information can be exited by pressing any button.
   - The selected item is displayed as normal. Other items are grayed out.
   - For the item being adjusted, [Adj.] is displayed.

[Dynamic]
[Standard]
[Real/Cinema]

To check [Measured]

Displays data for R/G/B.

1) **Press ▲▼ to select the color ([Red]/[Green]/[Blue] in [Measured]) to be measured.**
2) **Press the <SELECT> button.**
3) **Press ▲▼ to change the value, and press ◀ ▶ to move between digits.**
   - The numerical values can also be entered using the number (<0>-<9>) buttons of the remote control.

Color	x	y	L
[Red]	0.000 - 1.000	0.000 - 1.000	0.000 - 1.000
[Green]	0.000 - 1.000	0.000 - 1.000	0.000 - 1.000
[Blue]	0.000 - 1.000	0.000 - 1.000	0.000 - 1.000

To check [Target]

1) **Press ▲▼ to select the color ([Red]/[Green]/[Blue]/[Cyan]/[Magenta]/[Yellow]/[White] in [Target]) to be adjusted.**
2) **Press the <SELECT> button.**
3) **Press ▲▼ to change the value, and press ◀ ▶ to move between digits.**
   - The numerical values can also be entered using the number (<0>-<9>) buttons of the remote control.
   - The numerical value changes according to the value of [Color temp.] in the [Image adjust] menu.

Color	x	y	g
[Red]	0.000 - 1.000	0.000 - 1.000	0.000 - 1.000
[Green]	0.000 - 1.000	0.000 - 1.000	0.000 - 1.000
[Blue]	0.000 - 1.000	0.000 - 1.000	0.000 - 1.000
[Cyan]	0.000 - 1.000	0.000 - 1.000	0.000 - 1.000
[Magenta]	0.000 - 1.000	0.000 - 1.000	0.000 - 1.000
[Yellow]	0.000 - 1.000	0.000 - 1.000	0.000 - 1.000
[White]	0.000 - 1.000	0.000 - 1.000	0.000 - 1.000

To display the test pattern

1) **Press ▲▼ to select [Auto test pattern].**
2) **Press the <SELECT> button.**
3) **Press ▲▼ to switch the setting.**
   - Press the <SELECT> button to end the edit mode.

[Off]	Clears display of test pattern.
[On]	Displays the test pattern.

To temporarily clear the setting screen

1) **Press ▲▼ to select [Menu off].**
2) **Press the <SELECT> button.**
   - Press any button to return to the setting screen.

To perform [Factory default] setting

When the currently selected [Measured] and [Target] are reset, the values are returned to the factory default settings.

1) **Press ▲▼ to select [Factory default].**
2) **Press the <SELECT> button.**
   - A screen for confirming whether to restore the default setting is displayed.
3) **Select [Yes], and press the <SELECT> button.**
   - The confirmation screen is displayed.
4) **Select [Yes], and press the <SELECT> button.**

To reset a value during adjustment

The setting returns to its value before adjustment.

1) **Press ▲▼ to select [Reset].**
2) **Press the <SELECT> button.**
3) **Select [Yes], and press the <SELECT> button.**

To register adjusted content you have changed

Registers values after adjustment.

1) **Press ▲▼ to select [Store].**
2) **Press the <SELECT> button.**
3) **Select [Yes], and press the <SELECT> button.**

To display the test pattern

1) **Press ▲▼ to select [Test pattern].**
2) **Press the <SELECT> button.**
   - Displays the test pattern selection screen.
3) **Press ▲▼ to select the test pattern to be displayed, and press the <SELECT> button.**
   - The selection screen is cleared and the test pattern is displayed.
   - Press any button to return to the setting screen.
   - Press ▲▼ to select [Back], and press the <SELECT> button to return to the setting screen of [Advanced color matching].

[Measured]	[Red]/[Green]/[Blue]
[Target]	[Red]/[Green]/[Blue]/[Cyan]/[Magenta]/[Yellow]/[White]

To return to the sub menu

Returns the projector to the sub menu.

1) **Press ▲▼ to select [Back].**
2) **Press the <SELECT> button.**

[HDMI setup]

If the image cannot be correctly displayed when an external device is connected to the projector using HDMI, change the settings.

1) **Press ▲▼ to select [HDMI setup].**
2) **Press the <SELECT> button.**
   - ▲▼ are displayed over the sub menu.
3) **Press ▲▼ to switch the setting.**

[Normal] ⟷ **[Enhanced]**

[Normal]	Select when the output from the external device is “NORMAL*1”.
[Enhanced]	Select when the output from the external device is “ENHANCED*1”.

*1: The titles of the output settings differ depending on the device. For details, refer to the owner's manual of the external device.

[Logo]

Sets logo selection and the PIN code for logo selection.

1) **Press ▲▼ to select [Logo].**
2) **Press the <SELECT> button.**
   - The sub menu 2 is displayed.
3) **Press ▲▼ to switch the setting.**

[Logo select]

1) **Select [Logo select], and press the <SELECT> button.**
2) **Press ▲▼ to switch the setting.**
   - The setting will change as follows each time you press the button.

[Off] ⟷ **[User]** ⟷ **[Default]**

[Off]	Clears logo from screen.
[User]	Displays the image you have captured.
[Default]	Displays in the factory default settings.

[Capture]

This function enables you to capture an image being projected to use it for a starting-up display or background screen.

1) Select [Capture], and press the <SELECT> button.
- The confirmation screen is displayed.

2) Press ▲▼ to select [Yes].
- The projected image is captured.
- By selecting [User] in [Logo select], the captured image will be displayed the next time you turn on the projector.

Note
- The capture function is canceled when you select [Yes] in the [Quit?] screen.
- Before capturing an image, select [Standard] in the [Image select] menu to capture a proper image (➡ page 49).
- When capturing the image that has been adjusted by the keystone function, the adjusted data is automatically reset and the projector captures an image without keystone correction.
- When [Logo PIN code lock] is set to [On], [Capture] cannot be selected.
- When starting to capture a new image, the previously stored image is cleared even if you cancel the capturing.
- When there is no captured image or it is interrupted while capturing an image, [User] can not be selected, you can only switch between [Default] and [Off].

[Logo PIN code lock]

Sets the system to make the setting and changing of the “logo” only by the administrator.

1) Select [Logo PIN code lock], and press the <SELECT> button.
- The PIN code input screen is displayed.

2) Press ▲▼◀▶ or the number (<0> - <9>) buttons to enter your pin code.

3) Press ▲▼◀▶ to select [Set].

4) Press the <SELECT> button.
- If the PIN code is accepted, the projector returns to the sub menu 2.

5) Press ▲▼ to switch the setting.

[Off] ⟷ [On]

[Off]	The logo selection can be changed without the PIN code.
[On]	The PIN code is required to change the logo selection.

Note
- The entered PIN code is displayed with * mark on the screen.
- The factory default setting for the logo PIN code is “4321”.
- To re-enter a number, press ◀▶ to select the digit to re-enter, then use the ▲▼ or number (<0> - <9>) buttons to re-select the number.
- Move the cursor to [Cancel] and press the <SELECT> button to return to the sub menu 2.
- If [Logo PIN code] and the number are displayed in red, an error has occurred. Re-enter the number.

[Logo PIN code change]

Changes the logo PIN code.

1) Select [Logo PIN code change], and press the <SELECT> button.
- The PIN code input screen is displayed.

2) Press ▲▼◀▶ or the number (<0> - <9>) buttons to enter your pin code.

3) Press ▲▼◀▶ to select [Set].

4) Press the <SELECT> button.
- If the PIN code is accepted, the new logo PIN code is displayed on the screen.

5) Press ▲▼◀▶ or the number (<0> - <9>) buttons to set your new PIN code.

6) Press the <SELECT> button.

7) Select [Yes], and press the <SELECT> button.
- If the PIN code is accepted, the projector returns to the sub menu 2.

Note
- To re-enter a number, press ◀▶ to select the digit to re-enter, then press ▲▼ or the number (<0> - <9>) buttons to re-select the number.
- Move the cursor to [Cancel] and press the <SELECT> button to return to the sub menu 2.

[Fan control]

The projector controls the rotation of the fan automatically. You can make the rotation of the fan stronger depending on the ambient temperature or where the projector is installed (for example, when it is to be used at a high altitude).

1) Press ▲▼ to select [Fan control].

2) Press the <SELECT> button.
- ▲▼ are displayed over the sub menu 2.

3) Press ▲▼ to switch the setting.

[Normal] ⟷ [Max]

[Normal]	Controls the fan operation automatically.
[Max]	Forces the fan to work at maximum capacity. Then sound of the fan rotating will be louder than with [Normal].

[Remote control]

Allows simultaneous control or individual control with a single remote control when multiple projectors are used side by side.

1) Press ▲▼ to select [Remote control].

2) Press the <SELECT> button.
- ▲▼ are displayed over the sub menu.

3) Press ▲▼ to select an item.
- The factory default setting is [All].

[All]	Makes projector accept input from remote control of any ID number.
[Code 01] - [Code 64]	Sets ID numbers from 1 - 64.

4) Press the <SELECT> button.

5) Select [Yes], and press the <SELECT> button.
- [Remote control] will change.
- Returns projector to the sub menu.

Note
- When the ID number of the projector is changed, the ID number of remote control must be matched to the ID number of the projector.
- If a projector is set to [All] with multiple projectors in use, the projector cannot be controlled separately from the projectors with other ID numbers.

[RC sensor]

Enables and disables the remote control sensor on the projector body.

1) Press ▲▼ to select [RC sensor].

2) Press the <SELECT> button.
- The sub menu 2 is displayed.

3) Press ▲▼ to switch the setting.

[All]	Enables remote control sensors in three locations.
[Front & Top]	Enables only remote control sensors on front and top of the projector body.
[Top & Back]	Enables only remote control sensors on top and rear of the projector body.
[Front & Back]	Enables only remote control sensors on front and rear of the projector body.
[Front]	Enables only remote control sensor on front of the projector body.
[Top]	Enables only remote control sensor on top of the projector body.
[Back]	Enables only remote control sensor on rear of the projector body.

Note
- If the projector is installed in an upright position rather than on a ceiling bracket, fluorescent lighting may adversely affect the operation of the remote control when the remote control sensor on the top of the projector body is enabled. It is recommended that you disable the top remote control sensor (select any of [Front & Back], [Front], [Back]) when the projector is installed in the upright position.

[Power management]

1) **Press ▲▼ to select [Power management].**
2) **Press the <SELECT> button.**
   - The sub menu 2 is displayed.
3) **Press ▲▼ to switch the setting.**

[Off]	Cancels power management function.
[Ready]	Turns off the lamps and starts cooling when the time set using [Timer] has elapsed. While lamp is being cooled, the standby indicator <STAND-BY>, and the power indicator <POWER> are flashing, you cannot operate the projector. When lamp cooling has finished, the power indicator <POWER> continues flashing and the standby indicator <STAND-BY> lights up instead of flashing, indicating that the projector is now in the power management mode. From this point, if a signal is input or operations are performed on the projector, the lamps will turn on and the projection will start.
[Shut down]	Turns off the lamps and starts cooling when the time set using [Timer] has elapsed. During lamp cooling, you cannot operate the projector. When lamp cooling has finished, the power will turn off.
[Timer]	Sets times from 1 - 30 minutes.

Note

- The factory default setting is [Off].
- The power management function cannot be used when the freeze function (➡ page 37) or shutter function (➡ page 37) is in use.
- When the power management function is started, [P-timer] is reset.

[Direct on]

This is a function for automatically switching on the power of the projector when the power cord is connected, without requiring operations on the power <ON> button on the remote control or the power <ON/STAND-BY> button on the control panel.

1) **Press ▲▼ to select [Direct on].**
2) **Press the <SELECT> button.**
   - ▲▼ are displayed over the sub menu 2.
3) **Press ▲▼ to switch the setting.**

[Off] ⟷ **[On]**

[Off]	Enables normal operations to turn on/off the power.
[On]	Allows power to be turned on directly.

Note

- Be sure to turn on/off the power using the correct operations.
- Pressing the power <ON> button on the remote control or the power <ON/STAND-BY> button on the projector will not turn on the power until the lamp cooling has finished and the lamps are ready to be turned on again.

[Security]

Locks projector operations using button locking and the PIN code.

1) Press ▲▼ to select [Security].

2) Press the <SELECT> button.
- The sub menu 2 is displayed.

3) Press ▲▼ to select an item.

■ [Key lock]

Locks the control buttons to prevent mistaken operations of the projector.

1) Select [Key lock], and press the <SELECT> button.
- ▲▼ are displayed over the sub menu 2.

2) Press ▲▼ to switch the setting.
- The setting will change as follows each time you press the button.

	Key lock is off.
	Locks operations from the control panel.
	Locks operations from the remote control.

3) Press the <SELECT> button.

4) Select [Yes], and press the <SELECT> button.

Note
- The factory default setting is off.
- If you are unable to unlock, please consult your dealer.

■ [PIN code lock]

Sets the PIN code to restrict projector operations to the administrator.

1) Select [PIN code lock], and press the <SELECT> button.
- The PIN code input screen is displayed.

2) Press ▲▼◀▶ or the number (<0> - <9>) buttons to enter the PIN code.

3) Press ▲▼◀▶ to select [Set].

4) Press the <SELECT> button.
- If the PIN code is accepted, the projector returns to the sub menu 2.

5) Press ▲▼ to switch the setting.

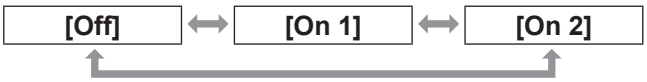

[Off]	Allows normal operation without the PIN code.
[On 1]	The PIN code is required to turn on the power of the projector.
[On 2]	The PIN code is requested the next time you turn on the power after a disconnection of the power cord. ● When the power is turned on/off using the button on the remote control or the control panel but without disconnecting the power cord, the projector operates normally without requesting the PIN code.

Note
- The entered PIN code is displayed with * mark on the screen.
- The factory default setting for the PIN code is “1234”.
- To re-enter a number, press ◀▶ to select the digit to re-enter, then press ▲▼ or the number (<0> - <9>) buttons to re-select the number.
- Move the cursor to [Cancel] and press the <SELECT> button to return to the sub menu 2.
- If “PIN code” and the numbers are displayed in red, an error has occurred. Re-enter the number.

■ [PIN code change]

Changes the logo PIN code.

1) **Select [PIN code change], and press the <SELECT> button.**
   - The PIN code input screen is displayed.
2) **Press ▲▼◀▶ or the number (<0> - <9>) buttons to enter the PIN code.**
3) **Press ▲▼◀▶ to select [Set].**
4) **Press the <SELECT> button.**
   - If the PIN code is accepted, the new logo PIN code is displayed on the screen.
5) **Press ▲▼◀▶ or the number (<0> - <9>) buttons to set your new PIN code.**
6) **Press the <SELECT> button.**
7) **Select [Yes], and press the <SELECT> button.**
   - If the PIN code is accepted, the projector returns to the sub menu 2.

Note

- To re-enter a number, press ◀▶ to select the digit to re-enter, then press ▲▼ or the number (<0> - <9>) buttons to re-select the number.
- Move the cursor to [Cancel] and press the <SELECT> button to return to the sub menu 2.

[Projector ID]

Sets the projector ID (1 to 64) for the RS-232C serial communication.

1) **Press ▲▼ to select [Projector ID].**
2) **Press the <SELECT> button.**
3) **Press ▲▼ to select an item.**
   - The factory default setting is [ALL].

[ALL]	Makes projector accept operations regardless of any ID number specified by the remote control or PC.
1 - 64	Sets ID numbers from 1 - 64 to the projector.

[Shutter]

Sets the shutter function.

1) **Press ▲▼ to select [Shutter].**
2) **Press the <SELECT> button.**
   - The sub menu 2 is displayed.
3) **Press ▲▼ to select an item.**

■ [Protection]

Locks the button to prevent shutter operations.

1) **Select [Protection], and press the <SELECT> button.**
   - ▲▼ are displayed over the sub menu 2.
2) **Press ▲▼ to select an item.**
   - The setting will change as follows each time you press the button.

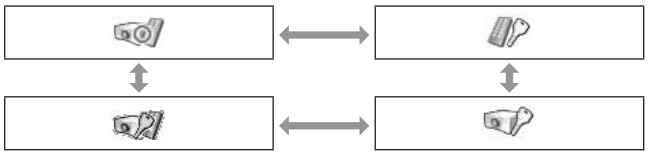

	Protection is off. Operation can be made from both remote control and projector.
	Locks operations from the remote control.
	Locks operations from the control panel.
	Locks operations from both the remote control and the control panel.

■ [Effect]

Sets special effects when shutter is opened and closed.

1) Select [Effect], and press the <SELECT> button.

- ▲▼ are displayed over the sub menu 2.

2) Press ▲▼ to select an item.

[Off] ⟷ [L 1] ⟷ [L 2]

[Off]	Turns off special effect. ● Factory default setting
[L 1]	Sets fade in and fade out when the shutter is opened and closed.
[L 2]	Sets slower fade in and fade out than L1.

■ [Release key]

Sets the release button when shutter is closed.

1) Select [Release key], and press the <SELECT> button.

- ▲▼ are displayed over the sub menu 2.

2) Press ▲▼ to select an item.

[Any] ⟷ [SHUTTER]

[Any]	The shutter function is canceled by pressing any button except the <MUTE> button on the remote control, and the function of the pressed button is executed.
[SHUTTER]	Only the <SHUTTER> button on the remote control or the control panel can be canceled.

Note

- If the power is turned on again after the power is turned off during the setting or the lamp is turned off with the [Management] setting, the shutter function is canceled.
- The setting of the selected item is enabled.

■ [Management]

Sets a time between closing of the shutter and the lamps turning off.

1) Select [Management], and press the <SELECT> button.

- ▲▼ are displayed over the sub menu 2.

2) Press ▲▼ to select an item.

- You can set times from 5 - 480 minutes.

Note

- When the management function is active, the lamp is turned off and the projector will begin a cooling operation.
- When cooling has finished, the power of the projector body is turned off and the standby indicator <STAND-BY> turns on.
- The shutter indicator <SHUTTER> begins flashing in blue as the cooling operation begins.
- The flashing continues after the cooling has finished and the standby indicator <STAND-BY> has turned on.
- The flashing stops when the projector power is turned on again.
- The power management function does not work when the image is blocked by the [Shutter].
- The factory default setting is “180 minutes”.
- You cannot set the time while the function is off.

[Video delay control]

Sets when you want to speed up digital processing of the images being projected.

1) Press ▲▼ to select [Video delay control].

2) Press the <SELECT> button.

3) Press ▲▼ to select an item.

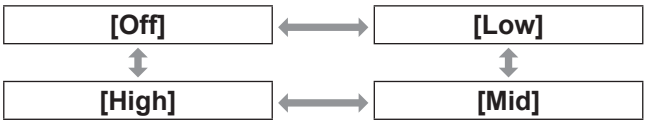

Note

- The speed of digital processing increases through [Low], [Mid], and [High].
- When each item is selected, the following items are grayed out and cannot be selected.

[Low]	● [Keystone] of the [Screen] menu
[Mid]	● [Progressive] and [Noise reduction] of the [Image adjust] menu
[High]	● [Keystone] of the [Screen] menu ● [Progressive] and [Noise reduction] of the [Image adjust] menu

[Closed caption]

Sets the color of the closed captions and selections.

1) Press ▲▼ to select [Closed caption].

2) Press the <SELECT> button.
- The sub menu 2 is displayed.

3) Press ▲▼ to select an item.

[Closed caption]	[Off], [CC1], [CC2], [CC3], [CC4]
[Color]	[Color]/[White] ● Displays in original colors.

Note
- This function can only be used when the input signal is composite video or S-video.
- The closed caption is not displayed when the menu screen is displayed.

[Filter counter]

1) Press ▲▼ to select [Filter counter].

2) Press the <SELECT> button.
- The sub menu 2 is displayed.

3) Press ▲▼ to select an item.

■ [Filter counter]

Displays usage time.
- This is displayed in red if a blockage is detected or if the usage time exceeds the time set in [Filter counter timer].

■ [Filter counter remaining]

The remaining time for the filter counter is displayed in units of 10%.
- This is displayed in red when the remaining time is 10%.

Note
- When the remaining time drops to 10% or below, is displayed, and when it reaches 0%, is displayed.

■ [Filter type]

Selects the type of filter to be used.

1) Select [Filter type], and press the <SELECT> button.
- ▲▼ are displayed over the sub menu 2.

2) Press ▲▼ to select an item.

[Normal]	When a normal filter is used
[Special]	When a smoke resistant filter (optional) is used

3) Press the <SELECT> button.

4) Select [Yes], and press the <SELECT> button.

Attention
- Always use the projector with filter installed.
- Select the filter type to be the same as the one you are using.

■ [Filter counter timer]

Sets a time to display a notification that the filter has reached the end of its replacement cycle.

1) Select [Filter counter timer], and press the <SELECT> button.
- ▲▼ are displayed over the sub menu 2.

2) Press ▲▼ to select an item.

3) Press the <SELECT> button.

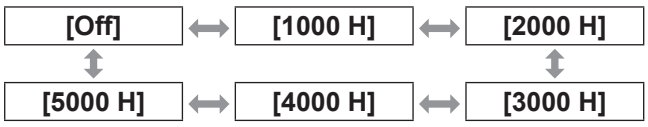

Note
- When [Off] is selected, blockages are detected automatically.
- When the smoke resistant filter (optional) is used, the set time is selected from among [Off], [10 H], [15 H], and [20 H].
- When the set time is exceeded, is displayed.

[Filter counter reset]

Resets the value of [Filter counter].
After replacing the filter, be sure to reset the counter.

1) **Select [Filter counter reset], and press the <SELECT> button.**
   - A screen for confirming whether to reset is displayed.
2) **Select [Yes], and press the <SELECT> button.**
   - The confirmation screen is displayed.
3) **Select [Yes], and press the <SELECT> button.**

Note

- Reset only after replacing the filter.
- When reset, the display of [Filter warning] disappears.

[P-timer]

1) **Press ▲▼ to select [P-timer].**
2) **Press the <SELECT> button.**
   - The sub menu 2 is displayed.
3) **Press ▲▼ to select an item.**

[Count up]

Elapsed time is counted from 00 min 00 sec.
Elapsed time from 00 min 00 sec to 180 min 00 sec is displayed.

[Count down]

Elapsed time is counted down from the set time.
Set the time using [Timer].

[Timer]

Sets the [Count down] time.

1) **Select [Timer], and press the <SELECT> button.**
   - ▲▼ are displayed over the sub menu 2.
2) **Press ▲▼ to select an item.**

Note

- The factory default setting is “10 minutes”.
- When [Count up] is selected, this item is grayed out and cannot be selected.

[Start]

Starts the count-up or countdown.

1) **Select [Start], and press the <SELECT> button.**
   - The menu screen is cleared and the timer is displayed.

[Stop]

Pauses the count-up or countdown.

1) **Select [Stop], and press the <SELECT> button.**
   - The stopped state of the timer is displayed for approximately three seconds, then the display returns to the menu screen.

[Restart]

Restarts the count up or countdown that was paused using [Stop].

1) **Select [Restart], and press the <SELECT> button.**
   - The menu screen is cleared and the timer is displayed.

[Reset]

Resets the counted time during operation.

1) **Select [Reset], and press the <SELECT> button.**
   - The count up is returned to “000:00” and the countdown is returned to the time set on the timer.

[Exit]

Exits the presentation timer during operation.

1) **Select [Exit], and press the <SELECT> button.**
   - The timer ends, and the screen display returns to the sub menu.

Note

- You can also use [P-timer] by pressing the <P-TIMER> button on the remote control.

[Test pattern]

1) **Press ▲▼ to select [Test pattern].**
2) **Press the <SELECT> button.**
   - The sub menu 2 is displayed.
3) **Press ▲▼ to select an item.**
4) **Press the <SELECT> button.**
   - The test pattern and the test pattern name are displayed.
   - While the test pattern name is displayed, press ▲▼ to go backwards and forwards between test patterns.

[Color]
[Gradation 1], [Gradation 2], [Gradation 3], [Gradation 4]
[All white]
[All black]
[Cross]

Note

- While the test pattern is displayed, press the <SELECT> button or the <MENU> button to return to the menu screen.
- Even while the test pattern is displayed, the zoom, focus, lens shift, shutter, and power off functions take priority.
- When the zoom, focus, or lens shift operation has finished, the projector returns to the test pattern.

[Factory default]

Returns settings other than the following to the factory default settings.

[Logo PIN code lock]
[PIN code lock]
[Filter counter] (All items)
[Logo]
[Network] (excluding AMX D.D.)

1) **Press ▲▼ to select [Factory default].**
2) **Press the <SELECT> button.**
   - A screen for confirming whether to restore the default setting is displayed.
3) **Select [Yes], and press the <SELECT> button.**
   - The confirmation screen is displayed.
4) **Select [Yes], and press the <SELECT> button.**

Note

- When you initialize the settings, all settings you have made are lost, and settings are restored to the factory default settings.

[Information] menu

Select [Information] from the main menu on the menu screen.
For operation of the menu screen, refer to "Navigating through menu" (➡ page 40).
- Press ◀ ▶ to switch the items.

Remote control **Control panel**

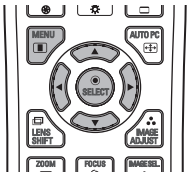

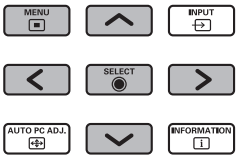

- You can also display sub menus using the <INFO.> button on the remote control.

Confirming the settings and usage state

Displays state of signals during projection, and current settings.

■ [Input]
Displays type of inputs and signals during projection.

■ [System]
Displays the status of the input signal during projection.

■ [H-sync freq.]
Displays H-sync frequency.

■ [V-sync freq.]
Displays V-sync frequency.

■ [Screen]
Displays the setting status of [Screen].

■ [Lamp select]
Displays the current [Lamp select] setting status.

■ [Lamp power]
Displays the current [Lamp power] setting status.

■ [Lamp interval]
Displays the setting value of the automatic replacement cycle of the lamp which is being used.

■ [Lamp 1]
Displays the usage time and status of the lamp 1.

■ [Lamp 2]
Displays the usage time and status of the lamp 2.

■ [Lamp 3]
Displays the usage time and status of the lamp 3.

■ [Lamp 4]
Displays the usage time and status of the lamp 4.

■ [Language]
Displays the current language.

■ [Filter counter]
Displays the actual usage time of the filter.

■ [Power management]
Displays the current [Power management] setting status.

■ [Key lock]
Displays the current [Key lock] setting status.

■ [PIN code lock]
Displays the current [PIN code lock] setting status.

■ [Shutter management]
Displays the current [Shutter management] setting status.

■ [Remote control]
Displays the current [Remote control] setting status.

■ [Serial number]
Displays the serial number of the projector.

■ [Option control No.]
For details, refer to "Using the input module" (➡ page 30).

[Network] menu

Select [Network] from the main menu on the menu screen, and select the item from the sub menu.
For operation of the menu screen, refer to "Navigating through menu" (➡ page 40).

- After selecting the item, press ◀ ▶▲▼ to make the setting.

Remote control **Control panel**

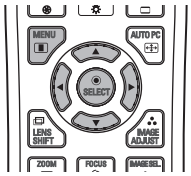

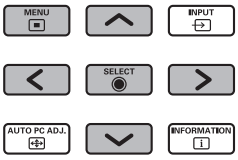

Note

- Set when connecting the projector to a computer over a network. For details of PJLink and networks, refer to "Owner's Manual–Network Operations".

Network

Switches on/off the network setting.

Network setting

Sets the network environment.

Network PIN code

Sets up the password of the network.

Network Information

Displays the network status of the projector.

AMX D.D.

Allows the projector to be detected by AMX Device Discovery.
For more details about AMX D.D., visit http://www.amx.com/.

Network factory default

Returns the network settings to the factory default settings.

About indicator status

If an indicator turns on

If a problem occurs within the projector, it will be notified with the temperature indicator <WARNING TEMP.>, the filter indicator <WARNING FILTER>, the shutter indicator <SHUTTER>, and the lamp indicator <LAMP REPLACE>.
Check the status of the indicators and take the following action.

Attention

- Make sure to follow the procedures in “Powering off the projector” (➡ page 34) to control the power when implementing measures.
- If multiple indicators have turned on or are flashing, check the status of each indicator and take the appropriate action.

Note

- Check the power status with the power indicator <POWER>. (➡ page 32)

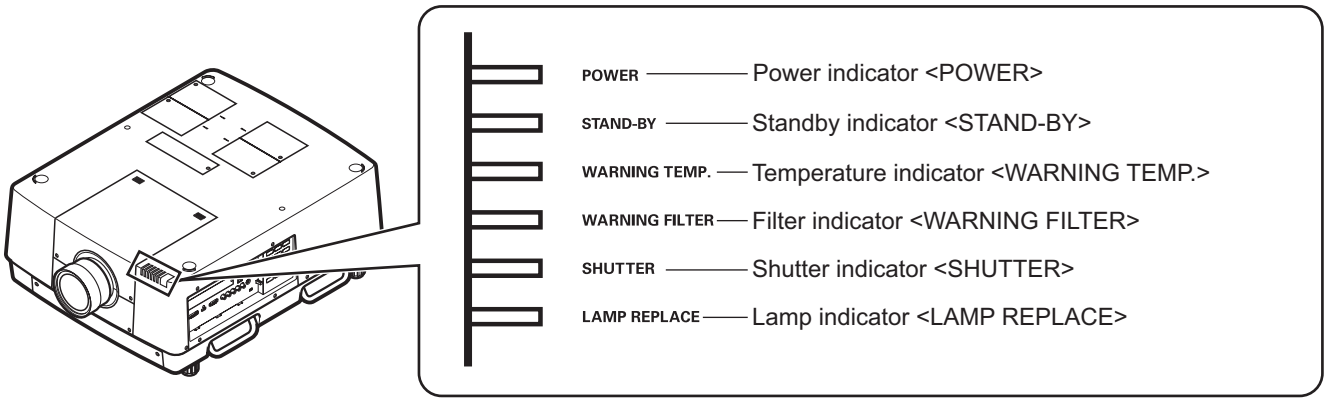

About indicator status

■ When operating correctly

The status of the indicator is displayed with the following symbols.
▲: Off, ●: On, ★: Flashing, ■: On or Flashing

Indicator						Status of the projector
<POWER> Green	<STAND-BY> Red	<WARNING TEMP.> Red	<WARNING FILTER> Orange	<SHUTTER> Blue	<LAMP REPLACE> Orange	
▲	▲	▲	▲	▲	▲	The power plug has been removed from the outlet.
▲	●	▲*1	■*1	■*1	■*1	The projector is in the standby mode. Turns on when pressing the power <ON> button on the remote control or the power <ON/STAND-BY> button on the control panel.
●	▲	▲*1	■*1	▲	■*1	The projector is operating normally.
▲	★*2	▲*1	■*1	■*1	■*1	The lamp is cooling down. The projector does not turn on when pressing the power <ON> button on the remote control or the power <ON/STAND-BY> button on the control panel until the standby indicator <STAND-BY> changes to on.
★*2	●	▲*1	■*1	▲	■*1	The projector is in the power management mode. The lamp will turn on when controlling the projector, allowing the user to start operating it.
★*2	★*2	▲*1	■*1	▲	■*1	Power management mode is ON and the lamp is cooling down.
●	▲	▲*1	■*1	●	■*1	The shutter function has been turned on. Press any button on the remote control or the control panel to cancel the function.
▲	●	▲	■*1	★*2	■*1	The projector is in the shutter management mode. The lamp will turn on when controlling the projector, allowing the user to start operating it.
▲	★*2	▲	■*1	★*2	■*1	Shutter management mode is on and the lamp is cooling down.

*1: The indicator will change according to different conditions, regardless of the status of other indicators.
*2: The indicator will flash in approximately 1-second intervals.

■When there is a problem with internal temperature

The status of the indicator is displayed with the following symbols.
▲: Off, ●: On, ★: Flashing, ■: On or Flashing

Indicator						Status of the projector
<POWER> Green	<STAND-BY> Red	<WARNING TEMP.> Red	<WARNING FILTER> Orange	<SHUTTER> Blue	<LAMP REPLACE> Orange	
●	▲	★*1	■*2	■*2	■*2	If the temperature within the projector becomes too high, the temperature indicator <WARNING TEMP.> will start to flash slowly.
▲	★*3	★*4	■*2	■*2	■*2	If the temperature within the projector becomes even higher, the temperature indicator <WARNING TEMP.> will flash faster, the power indicator <POWER> will turn off, and the projector will turn off automatically. The projector will not turn back on even when pressing the power <ON> button on the remote control or the power <ON/STAND-BY> button on the control panel. When the projector returns to the normal operating temperature, the standby indicator <STAND-BY> will change to on. The projector will turn back on when pressing the power <ON> button on the remote control or the power <ON/STAND-BY> button on the control panel. (The temperature indicator <WARNING TEMP.> will remain flashing.) Check the air filter.
▲	●	★*4	■*2	■*2	■*2	The projector has cooled inside, and returned to operating temperature. Pressing the power <ON> button on the remote control or the power <ON/STAND-BY> button on the control panel will make the temperature indicator <WARNING TEMP.> stop flashing and operate the projector. Check the air filter.

*1: The indicator will change according to different conditions, regardless of the status of other indicators.
*2: The indicator will turn on or flash under certain conditions, regardless of the status of other indicators.
*3: The indicator will flash in approximately 1-second intervals.
*4: The indicator will flash in approximately 0.5-second intervals.

About indicator status

■When there is a problem with internal power

The status of the indicator is displayed with the following symbols.
▲: Off, ●: On, ★: Flashing, ■: On or Flashing

Indicator						Status of the projector
<POWER> Green	<STAND-BY> Red	<WARNING TEMP.> Red	<WARNING FILTER> Orange	<SHUTTER> Blue	<LAMP REPLACE> Orange	
★*1	●	★*1	★*1	★*1	★*1	A problem has been detected within the projector. The projector will not turn back on even when pressing the power <ON> button on the remote control or the power <ON/STAND-BY> button on the control panel. Remove the power plug from the outlet, and plug it back in again. If the power turns off, or the indicator turns on or flashes again, remove the power plug from the outlet and contact your dealer to request an inspection and repair. Do not leave the projector plugged in with the indicator on or flashing. Doing so may cause a fire or electric shock.

*1: The indicator will change according to different conditions, regardless of the status of other indicators.

■When there is a problem with the air filter

The status of the indicator is displayed with the following symbols.
▲: Off, ●: On, ★: Flashing, ■: On or Flashing

Indicator						Status of the projector
<POWER> Green	<STAND-BY> Red	<WARNING TEMP.> Red	<WARNING FILTER> Orange	<SHUTTER> Blue	<LAMP REPLACE> Orange	
■*1	■*1	■*1	●	■*1	■*1	The indicator notifies you when the time set with “[Filter counter timer]” (➡ page 72) has been reached. Replace the air filter. (will be shown at the top right of the screen simultaneously.) Alternatively, the indicator notifies you when [Filter counter remaining] becomes 0%. Replace the air filter. (will be shown at the top right of the screen simultaneously.*2)

*1: The indicator will change according to different conditions, regardless of the status of other indicators.
*2: When [Display] (➡ page 59) is set to [On], the freeze function (➡ page 37) or shutter function (➡ page 37) will not be displayed on the screen during operation.

■When there is a problem with the lamp

The status of the indicator is displayed with the following symbols.
▲: Off, ●: On, ★: Flashing, ■: On or Flashing

Indicator						Status of the projector
<POWER> Green	<STAND-BY> Red	<WARNING TEMP.> Red	<WARNING FILTER> Orange	<SHUTTER> Blue	<LAMP REPLACE> Orange	
■*1	■*1	■*1	■*1	■*1	★*2	Either of the lamps do not turn on. (The lamp is cooling down. After the standby indicator <STAND-BY> turns on again, press the power <ON> button on the remote control or the power<ON/STAND-BY> button on the control panel.)
■*1	■*1	■*1	■*1	■*1	★*3	Either of the lamps do not turn on. (The lamp has cooled, and returned to operating temperature. Pressing the power <ON> button on the remote control or the power <ON/STAND-BY> button on the control panel will make the indicator stop flashing and operate the projector.)
■*1	■*1	■*1	■*1	■*1	●	The recommended time to replace the lamp has been reached. The will be displayed at the top right of the screen to notify the user of replacement. Replace the lamp unit as soon as possible. Replacing the lamp will cause the lamp indicator <LAMP REPLACE> to turn off.

*1: The indicator will change according to different conditions, regardless of the status of other indicators.
*2: The indicator will flash in approximately 0.5-second intervals.
*3: The indicator will flash in approximately 2-second intervals.

Note

- The status of each lamp can be checked as the lamp indicators (<LAMP 1 REPLACE> to <LAMP 4 REPLACE>) at the top of the projector turn on or flash. (➡ page 85)

■When there is a problem with the shutter

The status of the indicator is displayed with the following symbols.
▲: Off, ●: On, ★: Flashing, ■: On or Flashing

Indicator						Status of the projector
<POWER> Green	<STAND-BY> Red	<WARNING TEMP.> Red	<WARNING FILTER> Orange	<SHUTTER> Blue	<LAMP REPLACE> Orange	
■*1	■*1	■*1	■*1	★*2	■*1	The shutter cannot be opened or closed. The lamp will turn off, cooling will begin and the projector will switch to the standby mode. The power will turn on and the projector will attempt to open the shutter automatically up to three times. After three failed attempts, the projector will switch to the standby mode after the lamp has cooled.
▲	★*3	▲	▲	★*2	■*1	There is a problem with opening or closing the shutter, and the lamp has turned off and is cooling down.
▲	●	▲	■*1	★*2	■*1	There is a problem with opening or closing the shutter, and projector will switch to the standby mode after the lamp has turned off and cooled down.

*1: The indicator will change according to different conditions, regardless of the status of other indicators.
*2: The indicator will flash in approximately 0.5-second intervals.
*3: The indicator will flash in approximately 1-second intervals.

Note

- The status of each lamp can be checked as the lamp indicators (<LAMP 1 REPLACE> to <LAMP 4 REPLACE>) at the top of the projector turn on or flash. (➡ page 85)

Maintenance/replacement

Before maintaining/replacing the unit

- When maintaining or replacing the unit, always turn off the power and remove the power plug from the outlet. (➡ pages 31, 34)
- When turning off the power, make sure to follow the procedures in “Powering off the projector” (➡ page 34).

Maintenance

Outer case

Wipe off dirt and dust with a soft, dry cloth.

- If the dirt is persistent, soak the cloth with water and wring it thoroughly before wiping. Dry off the projector with a dry cloth.
- Do not use solvents such as benzene, thinner, rubbing alcohol, household cleaners, or chemical wipes. Using them may cause deterioration of the outer case.

Front surface of the lens

Wipe off dirt and dust off the front surface of the lens with a soft, dry, and clean cloth.

- Do not use a cloth that is fluffy, dusty, or soaked with oil/water.
- Do not use excessive force when wiping the lens as it is fragile.

Attention

- Lenses are made of glass. Impacts or excessive force when wiping may scratch its surface. Please handle with care.
- Never use flammable solvents or air sprays on or around the projector. The temperature within the projector may be extremely hot due to the projection lamp operation. An explosion or fire may still occur even after turning off the projector. Other than flammable air spray, the internal parts may also become damaged due to cold air.

Replacing the parts

Air filter

The replacement filter (Part No.: T1FTX0069--) is optional. To purchase the product, consult your dealer.

Replacement of the air filter

1) Pull out the air filter unit.

- Use a Phillips screwdriver to turn the screws counterclockwise until they turn freely, and then remove the air filter unit.

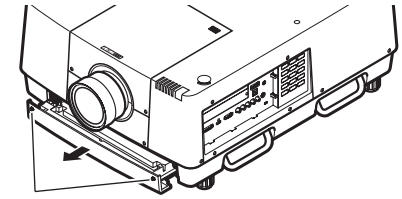

2) Remove the holder.

- Loosen the three screws on the holder (A, B), slide the holder in the direction shown by the arrow in the image, and lift up to remove the holder.

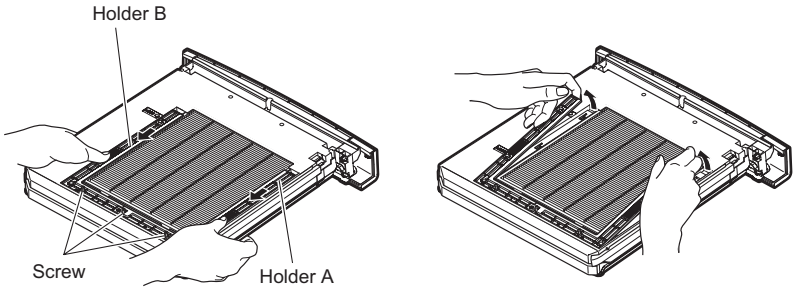

3) Remove the air filter.

- Hook your fingers in the slot to lift up and remove the air filter.

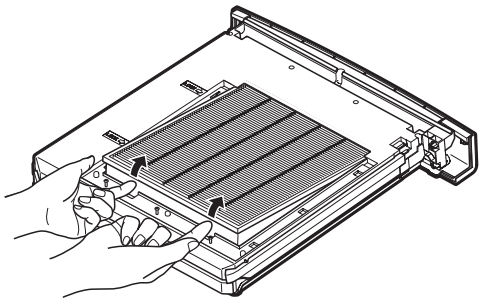

4) Attach the new air filter.

- Inserting the new air filter by slowly sliding it will make it easier to attach.
- The side with the sponge must be the top. Attaching it with the wrong side up or forcing it to attach will cause the air to leak in. The air filter does not work fully and as a result, dust will get into the projector.

5) Attach the holder.

- Place the holder (A, B) on top of the filter.
- Slide the holder so that its arrows line up with the arrows on the unit, and attach the holder.
- Tighten the three holder screws.

6) Attach the air filter unit to the projector.

- Perform step **1)** in the reverse order.

7) Reset the filter counter.

- Turn on the power and perform [Filter counter reset] in the [Setting] menu.

Attention

- Make sure to turn off the power before replacing the air filter.
- Before attaching a new air filter, be sure to remove the packing material of the air filter.
- When attaching the unit, make sure that the projector is stable. Perform the replacement in a safe place where the projector will not be damaged even if you drop the air filter unit.
- When turning the projector on, make sure that the air filter unit is installed before using the projector. Failure to do so may cause damage.
- Air filters cannot be reused.
- The air filter and unit cannot be washed in water. Make sure not to wet the air filter with water or any other liquid. Doing so may cause damage.
- After replacing the air filter, reset the filter counter. Otherwise, the power of the projector may be turned off for safety.
- After attaching the air filter unit, be sure to tighten the screws. If not, the air filter unit may drop off while projecting.

Lamp unit

The lamp unit is a consumable component. Check the lamp usage duration with “[Information] menu” (➡ page 75) and perform regular replacement.
If the replacement message is displayed on the screen and the lamp indicators <LAMP 1 REPLACE> to <LAMP 4 REPLACE> turn on, replace the lamp units.
It is recommended that you request a qualified technician to replace the lamp unit. Consult your dealer.
Consult your dealer to purchase the part POA-LMP147 (serviceable part).

Attention

- Do not replace the lamp unit until it has cooled down sufficiently. (Wait at least 60 minutes after use.)
  The inside of the cover is very hot and may cause burns.

Notes on the replacement of the lamp unit

- Since the luminous lamp is made of glass, it may burst if dropped or hit with a hard object. Please handle with care.
- A Phillips screwdriver is necessary when replacing the lamp unit.
- When replacing the lamp unit, be sure to hold it by the handle.
- The lamp contains mercury. When disposing of the used lamp unit, ask your nearest local authorities or dealer about proper disposal of the unit.

Attention

- Use only specified lamp units.
- The product numbers of accessories and separately sold components are subject to change without notice.
- Replacement of all four lamps simultaneously is recommended to ensure a balance brightness and tint.

When to replace the lamp unit

The lamp unit is a consumable component. Replace the lamp unit regularly, as its brightness gradually decreases over time. The estimated duration before replacement is 2 000 hours (when [Lamp power] is set to standard). However, this may be shortened depending on individual lamp characteristics, usage conditions, and the installation environment. Earlier replacement of lamp units is recommended for this reason.
The duration exceeds 2 200 hours of usage for two lamps, the lamps will be switched to the other two lamps if they are available. After switching, if the duration exceeds 2 200 hours of usage for one of the two lamps and the lamp fails, only the other lamp will light.
If the power is turned on without replacing the lamps after the duration exceeds 2 200 hours of usage for all lamps, the power automatically turns off after approximately ten minutes to prevent the malfunction of the projector.

On-screen display	Lamp indicator <LAMP REPLACE>	Lamp indicators <LAMP 1 REPLACE> to <LAMP 4 REPLACE>
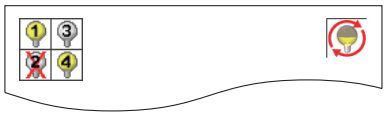	LAMP	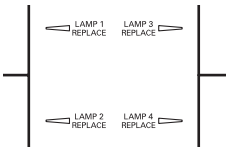
The lamp replacement instructions notify the replacement time, and the lamp status notifies which lamp to replace.	Turns orange.	Turns orange to notify which lamp to replace.

Replacing the lamp unit

Attention

- Turn off the UV lamp before opening the lamp cover.
- When the projector is mounted on the ceiling, do not put your face near the lamp unit.
- Attach the lamp unit securely.
- If the lamp unit is not attached properly, remove it and then attach it again. Forcing the lamp unit in may break the connector.
- The glass surface may be hot. When replacing the lamp unit, be sure to hold it by the handle.

1) Check which lamp to replace with the lamp status displayed on the screen, or the lamp indicators <LAMP 1 REPLACE> to <LAMP 4 REPLACE>.

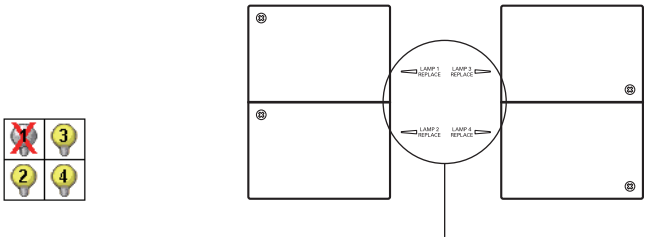

Lamp status

Lamp indicators <LAMP 1 REPLACE> to <LAMP 4 REPLACE>

2) After following the procedures described in "Powering off the projector" (➡ page 34) and press the <○> side of the main power switch to turn off the power, disconnect the power plug from the power outlet, and wait at least 60 minutes, and then check if the lamp unit has cooled down.

3) Use a Phillips screwdriver to turn the lamp cover fixing screw on top of the projector body until they turn freely, and then open the lamp cover.

- Open the cover until it is at 90° to the projector.

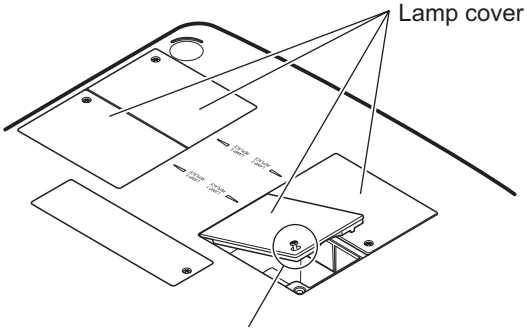

4) Use a Phillips screwdriver to turn the lamp unit fixing screws (two screws) until they turn freely, and then holding the handle, slowly pull out the lamp unit from the projector.

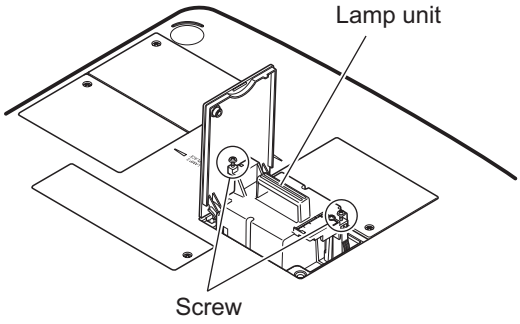

5) Insert the new lamp unit taking note of its direction, and use a Phillips screwdriver to firmly tighten the lamp unit fixing screws (two screws).

- Do not smear the glass surface by touching it with your hand.

6) Close the lamp cover, and use a Phillips screwdriver to firmly tighten the lamp cover fixing screw.

Note

- When replacing with the new lamp unit (Product No.: POA-LMP147), the projector resets the total usage time of the lamp unit automatically.
- After replacing the lamp unit, be sure to tighten the lamp cover fixing screw. If not, the lamp unit may drop off while projecting.

	TURN OFF THE UV LAMP BEFORE OPENING THE LAMP COVER
	To prevent glass fragments from scattering, hold the lamp unit vertically when replacing it. When the projector is attached to the ceiling, do not work directly under the lamp cover or put your face near it. Remove the lamp cover slowly.
	LAMP NO. : POA-LMP147

Troubleshooting

Review the following points. For details, see the corresponding pages.

Problem	Points to be checked	page
Power does not turn on.	● Is the power plug firmly inserted into the outlet?	—
	● Is the main power switch turned to <○>?	34
	● Is the power supplied from the outlet?	—
	● Have the circuit breakers tripped?	—
	● Is the power indicator <POWER> turned off?	32
	● Is the temperature indicator <WARNING TEMP.> flashing?	77
No picture appears.	● Is the picture (output) device connected correctly?	26
	● Is the input selection set correctly?	37
	● Is the external device that is connected to the projector working properly?	—
	● Is the projector being used within the operating temperature range (5˚C (41˚F) to 40˚C (104˚F))?	103
	● Is the shutter closed?	37
The picture is fuzzy.	● Is the lens focus set correctly?	36
	● Is the projection distance appropriate?	106
	● Is the lens dirty?	83
	● Is the projector installed perpendicular to the screen?	—
	● Is there condensation on the lens?	—
The color is pale/ The tint is grayish.	● Are [Color] and [Tint] adjusted correctly?	50
	● Is the device that is connected to the projector adjusted correctly?	—
	● Is the RGB cable damaged?	—
The picture is dark.	● Are [Contrast] and [Brightness] adjusted correctly?	50
	● Is [Image select] adjusted correctly?	49
	● Is [Lamp select] set to [2-Lamps]?	60
	● Is [Lamp power] set to eco-mode?	60
	● Is it time for the lamp to be replaced?	85
The remote control does not work.	● Are the batteries flat?	—
	● Are the batteries inserted in the correct direction?	23
	● Is the remote control <ON>/<OFF> switch set to <ON>?	19
	● Are there any obstructions between the remote control and the projector's remote control sensor?	19
	● Is the remote control being used beyond its effective operating range?	19
	● Are other forms of light, such as fluorescent lights, affecting the projection?	19
	● Is the remote control cable connected to the projector or the remote control?	23
	● Is the remote control operation locked with [Key lock] in the [Setting] menu?	69
	● Is [RC sensor] set correctly in the [Setting] menu?	67
	● Has the remote control number been changed?	23, 67

Problem	Points to be checked	page
The control buttons of the projector do not work.	● Is the projector operation locked with [Key lock] in the [Setting] menu?	69
The correct picture is not displayed.	● Is [Input] selected correctly?	44
	● Is [Image adjust] adjusted correctly?	50
	● Is [Screen] selected correctly?	55
	● Is the lens shift in its maximum position?	35
	● Is there a problem with the video tape or other picture sources?	—
	● Is the projector receiving incompatible signals?	99
The picture from the computer is not displayed.	● Is the cable too long? (Use a cable that is 10 m or shorter.)	—
	● Is [Input] selected correctly?	44
	● Is [PC adjust] adjusted correctly?	46
	● Is the external video output of the laptop computer set correctly? (Example: The external output settings may switch by pressing the Fn + F3 or Fn + F10 keys simultaneously. Refer to the user manual provided with your computer, as the method varies depending on the type of computer.)	—
[Auto PC adj.] does not work.	● Is the projector receiving incompatible signals?	99
	● Is an incompatible signal selected with [System]?	45
There is no picture from HDMI compatible devices, or the picture is distorted.	● Is the HDMI cable firmly connected?	26, 27
	● Turn off/on the power of the projector and connected devices.	—
	● Is an incompatible signal connected?	101
The power turns off by itself.	● Is [Shut down] set with [Power management] in the [Setting] menu?	68
	● Is the projector being used without replacing the air filter or performing [Filter counter reset] after is displayed in the top right of the screen?	73
The shutter function does not work.	● Is [Protection] in [Shutter] set correctly in the [Setting] menu?	70

Attention

- If problems persist even after checking the preceding points, consult your dealer.
- Consult your dealer if you have forgotten the logo password or password.

Adjusting screens of multiple screen images

[Edge blending] and [Color matching] allow images from multiple projectors to be overlapped seamlessly.

■ [Edge blending]

1) Check that the settings of [Screen] and [Image adjust] of each projector are the same.

2) Project images from each projector that you want to overlap.

- The following is an example of how to overlap images from projector A and B.

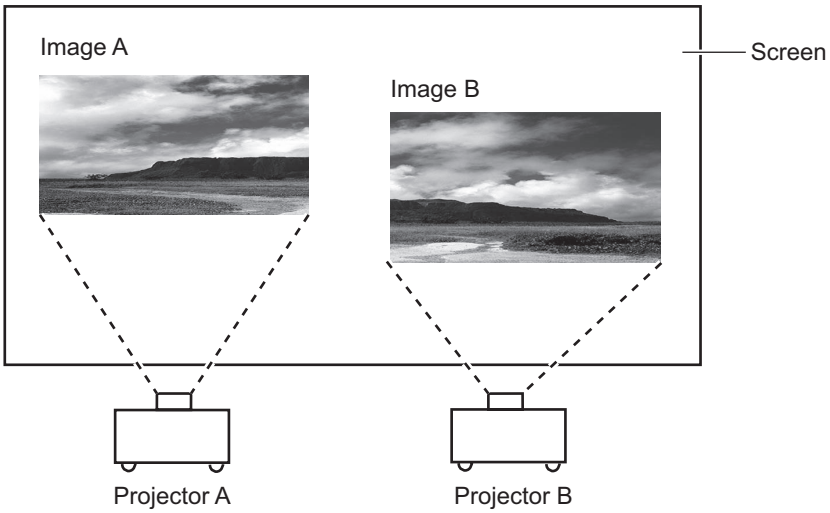

3) Select [Edge blending] in the [Setting] menu and display the setting screen.

4) Select [Edge blending] to turn it [On], and then press [Start] and [Width] to adjust the overlapping position and the amount of overlap (blending width) of images from projectors A and B respectively.

- The following values are an example.
- Set [Width] to the same value for all projectors to be overlapped.

Projector A: Set [Right] in [Width] to 100

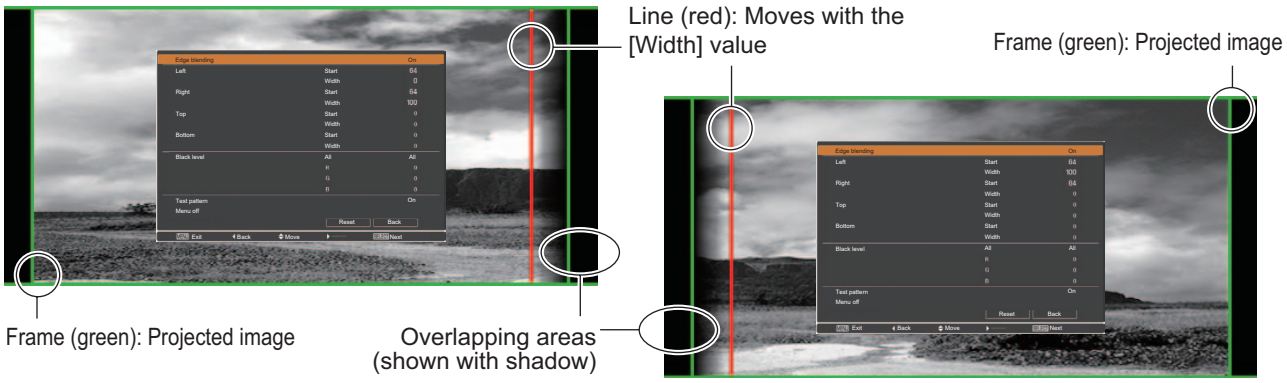

Projector B: Set [Left] in [Width] to 100

5) Where required, adjust [Focus] and [Zoom] for the image position from each projector.

6) Then use [Lens shift] to overlap the shaded areas.

- The red line will turn yellow if it is overlapped correctly.

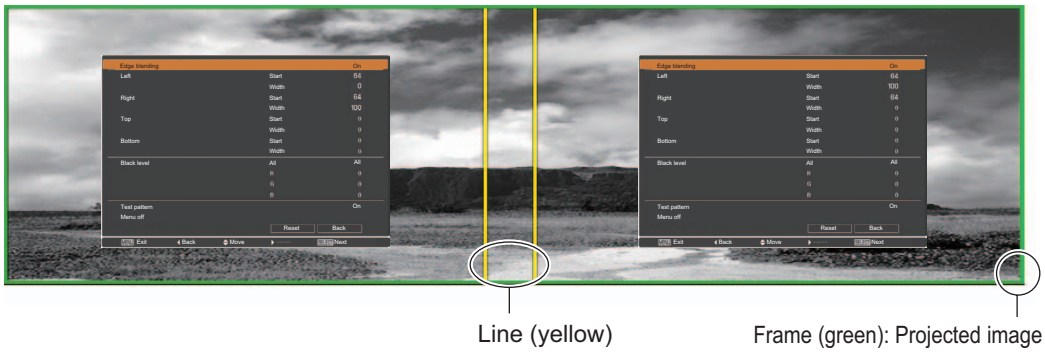

7) Turn [Test pattern] to [On] to display a 50% white test pattern.

- The overlapping areas will be displayed brighter than other areas.

8) Adjust [Black level] so that there is no difference between the overlapping areas and other areas.

- To adjust the overlapping areas, setting the [Contrast] value in the [Image adjust] menu is recommended.

If the left and right colors do not match, proceed to the following step.

■ [Color matching]

9) Select [Color matching] in the [Setting] menu and display the setting screen.

10) Turn on color matching with [On] and adjust [Red]/[Green]/[Blue]/[White].

11) Select [Advanced color matching] if more detailed settings are required, and display the setting screen.

12) Turn on advanced color matching with [On] and adjust each color with [Target].

- Set the [Target] value to within the [Measured] value range.

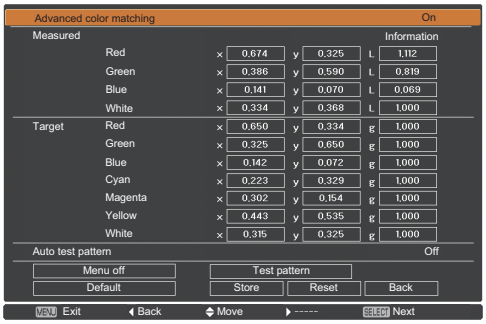

Example) Value for “[Red], x”
“[Measured]=0.674”, so [Target] is set to a smaller value of “0.650”.

13) If the colors do not match even after adjusting [Target], use a colorimeter to measure the chromaticity coordinates and luminance to make further adjustments.

● **Adjusting colors with a colorimeter**

1) **Turn [Advanced color matching] to [On].**

2) **Select [Test pattern] and press the <SELECT> button.**
   ● Displays the test pattern selection screen.

3) **Select [Red] (or [Green], [Blue]) from [Measured] and press the <SELECT> button.**
   ● The test pattern is displayed.

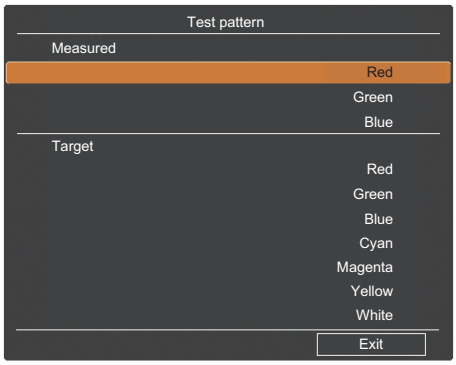

4) **Measure the chromaticity coordinates (x, y) and luminance (Lx) using the colorimeter.**

5) **Select [Exit] and press the <SELECT> button.**
   ● Return to the advanced color matching setting screen.

6) **Enter the value obtained in step 4).**

7) **Calculate the "L" value from the following formula and enter the value.**
   Example) Calculate "L" for the measured red value.

$$\frac{\text{Luminance (Lx) of red}}{\text{Luminance of red + luminance of green + luminance of blue (Lx)}}$$

8) **Adjust the [Target] value again.**

9) **Select [Store] to register the adjusted value.**
   ● Where required, adjust other projectors in the same way.

Label notifying registration of password

Apply the supplied label to the projector in a visible location when the password is registered and valid.

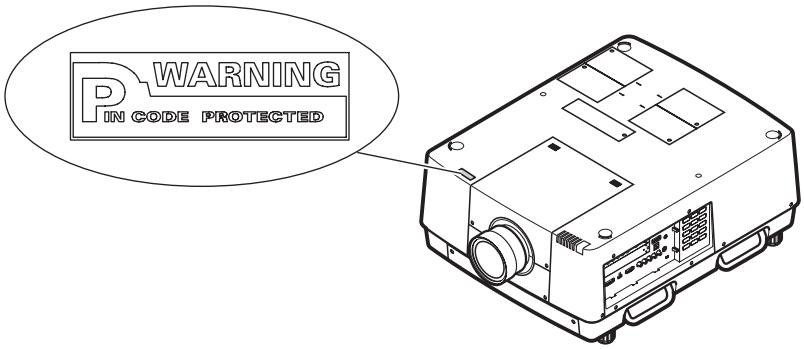

PJLink

This projector complies with Class1 as defined by JBMIA (Japan Business Machine and Information System Industries Association) PJLink standards. This projector is compatible with all commands defined by PJLink Class1, and verifies that it complies with Class1 standards defined by PJLink.

Projector input name		PJLink	
		Input name	Parameters
INPUT 1	RGB (PC Analog)	RGB 1	11
	RGB (Scart)	RGB 2	12
	RGB (PC Digital)	DIGITAL 1	31
	RGB (AV HDCP)	DIGITAL 2	32
	HDMI	DIGITAL 3	33
	INPUT 1	AUX 1	46
INPUT 2	Video	VIDEO 1	21
	Y,Pb/Cb,Pr/Cr	VIDEO 2	22
	RGB	RGB 3	13
	S-video	VIDEO 5	25
	INPUT 2	AUX 2	47
INPUT 3	INPUT 3	AUX 3	48
INPUT 4	INPUT 4	AUX 4	49

Technical Information

■ PJLink

The PJLink subcommittee was established within the Data Projector Group in September 2003. The new PJLink interface specification for projectors was stipulated by the PJLink subcommittee as part of its first year of activities. PJLink is a unified standard for the control and management of projectors.
The standard allows centralized management of projectors and operation with a controller, regardless of manufacturer. JBMIA aims to provide early systemization of monitoring and control of network projectors, which will become mainstream in the future, delivering greater convenience to the user and making projectors more widely used.

Class1: standardization of the projector's basic control and monitoring functions.
Basic projector control: power control, input selection, etc.
Acquisition of each type of projector information and status: power status, input selection status, error status, lamp cumulative operating time, etc.

JBMIA: Japan Business Machine and Information System Industries Association.
Association that changed its name on April 1, 2002, from Japan Business Machine Makers Association (JBMA), which was established in 1960.

PJLink™ PJLink is a registered trademark of JBMIA and pending trademark in some countries.
PJLink URL: http://pjlink.jbmia.or.jp/english/

Serial terminal

The projector <SERIAL PORT IN>/<SERIAL PORT OUT> connection terminals conform with RS-232C so that the projector can be connected to and controlled from a computer.

■ Connection

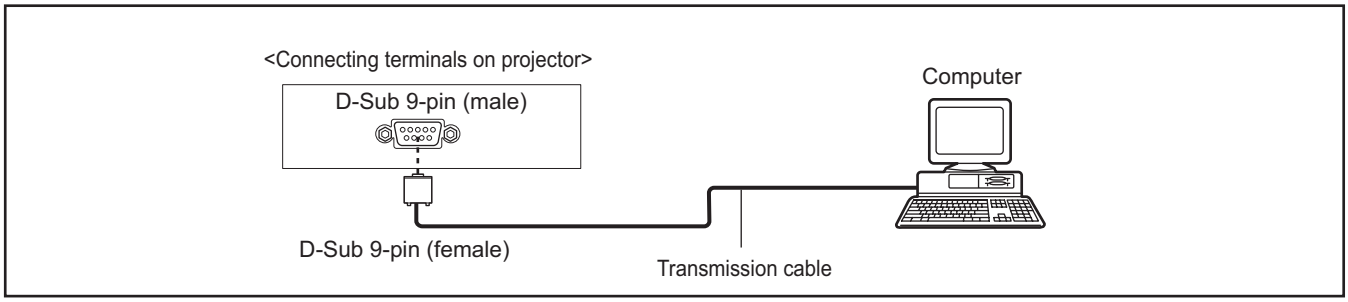

■ Pin assignments and signal names

D-Sub 9-pin (male) Outside view	Pin No.	Signal name	Details
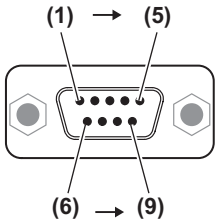	(1)	—	NC
	(2)	RXD	Received data
	(3)	TXD	Transmitted data
	(4)	—	NC
	(5)	GND	Ground
	(6)	—	NC
	(7)	—	
	(8)	—	
	(9)	—	

Appendix

Serial Control Interface

This projector provides a function to control and monitor the projector's operations by using the RS-232C serial port.

■ Operation

1) Connect a RS-232C serial cross cable to <SERIAL PORT IN> on the projector and serial port on the PC (➡ page 26).

2) Check the communication specifications shown below.

Baud rate : 9600 / 19200 bps	Flow control : none
Parity check : none	Data bit : 8
Stop bit : 1	

3) Type a functional execution command and press the Enter key.
Example) To select INPUT 2 port, type “C06” [CR].

Note

- The default of the baud rate is set to 19200 bps. If an error occurs in the communication, change the serial port and the communication speed (baud rate).
- Enter with ASCII 64-byte capital characters and one-byte characters.

■ Functional Execution Commands

Format

The command is sent from PC to the projector with the format below;
“C” [Command] [CR]
Command: two characters (refer to the command table below.)

– The projector decodes the command and returns the “ACK” with the format below;
[ACK] [CR]

– When the projector cannot decode the command, it returns with format below.
“?” [CR]

Command	Function	Command	Function
C00	Turn the projector ON	C3D	Pointer DOWN
C01	Turn the projector OFF (immediately OFF)	C3F	Enter
C05	Select Input 1	C46	Zoom DOWN
C06	Select Input 2	C47	Zoom UP
C07	Select Input 3	C4A	Focus DOWN
C08	Select Input 4	C4B	Focus UP
C0D	Video mute ON	C5D	Lens shift UP
C0E	Video mute OFF	C5E	Lens shift DOWN
C0F	Screen Normal Size	C5F	Lens shift LEFT
C10	Screen Full Size	C60	Lens shift RIGHT
C1C	Menu ON	C89	Auto PC Adj.
C1D	Menu OFF	C8E	Keystone UP
C3A	Pointer RIGHT	C8F	Keystone DOWN
C3B	Pointer LEFT	C90	Keystone RIGHT
C3C	Pointer UP	C91	Keystone LEFT

■ Status Read Commands

Format

The command is sent from PC to the projector with the format below;

"CR" [Command] [CR]

Command: one character (refer to the command table below.)

The projector decodes the command and returns the 'Character string' with the format below;

Command	Function	Return value	Projector status
CR0	Status Read	00	Power On
		80	Stand-by mode
		40	Countdown
		20	Cooling down
		10	Power Malfunction
		28	Cooling down at the temperature anomaly
		24	Cooling down at Power Management mode
		04	Power Management mode after Cooling down
		21	Cooling down after the projector is turned off when the lamps are out.
		81	Stand-by mode after Cooling down when the lamps are out.
		88	Stand-by mode after Cooling down at the temperature anomaly.
		2C	Cooling down when the projector is turned off by the shutter management function.
		8C	Stand-by mode after Cooling down by the shutter management function.
CR6	Temperature Read	%1 %2	%1 = Temperature at Sensor 1 (˚C) %2 = Temperature at Sensor 2 (˚C) (ex.) %1 = 12.3 (˚C), %2 = 23.4 (˚C) → The projector returns " 12.3 23.4". (For each sensor, two digit and the tenth place numbers are displayed with a space between each temperature.)
		?	Communication failure

The tables on page 95 show the typical command lists for controlling the projector. Please consult your local dealer for further information of other commands.

Other terminals

■ <S-VIDEO IN> terminal pin assignments and signal names

Outside view	Pin No.	Signal name
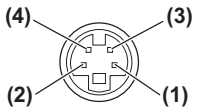	(1)	GND (luminance signal)
	(2)	GND (color signal)
	(3)	Luminance signal
	(4)	Color signal

■ <ANALOG IN> terminal pin assignments and signal names

Outside view	Pin No.	Signal name
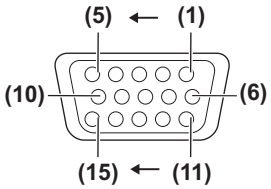	(1)	R
	(2)	G
	(3)	B
	(9)	+5 V
	(12)	DDC data
	(13)	HD/SYNC
	(14)	VD
	(15)	DDC clock

(4) is not used.
(5) to **(8)**, **(10)**, and **(11)** are GND terminals.

■ <HDMI IN> terminal pin assignments and signal names

Outside view	Pin No.	Signal name	Pin No.	Signal name
Odd number pins from **(1)** to **(19)** 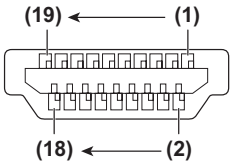 Even number pins from **(2)** to **(18)**	(1)	T.M.D.S data 2 +	(11)	T.M.D.S clock shield
	(2)	T.M.D.S data 2 shield	(12)	T.M.D.S clock -
	(3)	T.M.D.S data 2 -	(13)	CEC
	(4)	T.M.D.S data 1 +	(14)	—
	(5)	T.M.D.S data 1 shield	(15)	SCL
	(6)	T.M.D.S data 1 -	(16)	SDA
	(7)	T.M.D.S data 0 +	(17)	DDC/CEC GND
	(8)	T.M.D.S data 0 shield	(18)	+5 V
	(9)	T.M.D.S data 0 -	(19)	Hot plug detection
	(10)	T.M.D.S clock +		

■ <DIGITAL (DVI-D) IN> terminal pin assignments and signal names

Outside view	Pin No.	Signal name	Pin No.	Signal name
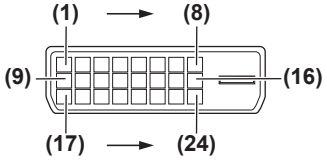	**(1)**	T.M.D.S data 2 -	**(13)**	–
	(2)	T.M.D.S data 2 +	**(14)**	+5 V
	(3)	T.M.D.S data 2/4 shield	**(15)**	GND
	(4)	–	**(16)**	Hot plug detection
	(5)	–	**(17)**	T.M.D.S data 0 -
	(6)	DDC clock	**(18)**	T.M.D.S data 0 +
	(7)	DDC data	**(19)**	T.M.D.S data 0/5 shield
	(8)	–	**(20)**	–
	(9)	T.M.D.S data 1 -	**(21)**	–
	(10)	T.M.D.S data 1 +	**(22)**	T.M.D.S clock shield
	(11)	T.M.D.S data 1/3 shield	**(23)**	T.M.D.S clock +
	(12)	–	**(24)**	T.M.D.S clock -

List of compatible signals

The following table specifies the types of signal compatible with the projector.

■ When the signal is analog

Screen display mode	Resolution*1 (dots)	Scanning frequency		Dot clock frequency (MHz)
		Horizontal (kHz)	Vertical (Hz)	
VGA 1	640 x 480	31.470	59.880	25.149
VGA 2	720 x 400	31.470	70.090	28.322
VGA 3	640 x 400	31.470	70.090	25.175
VGA 4	640 x 480	37.860	74.380	31.500
VGA 5	640 x 480	37.860	72.810	31.500
VGA 6	640 x 480	37.500	75.000	31.500
VGA 7	640 x 480	43.269	85.000	36.000
MAC LC13	640 x 480	34.970	66.600	31.330
MAC 13	640 x 480	35.000	66.670	30.240
480p	640 x 480	31.470	59.880	25.200
576p	768 x 576	31.250	50.000	29.500
576i	768 x 576i	15.625	50.000	14.750
480i	640 x 480i	15.734	60.000	12.273
SVGA 1	800 x 600	35.156	56.250	36.000
SVGA 2	800 x 600	37.880	60.320	40.000
SVGA 3	800 x 600	46.875	75.000	49.500
SVGA 4	800 x 600	53.674	85.060	56.250
SVGA 5	800 x 600	48.080	72.190	50.000
SVGA 6	800 x 600	37.900	61.030	40.020
SVGA 7	800 x 600	34.500	55.380	36.432
SVGA 8	800 x 600	38.000	60.510	40.128
SVGA 9	800 x 600	38.600	60.310	38.600
SVGA 10	800 x 600	32.700	51.090	32.700
SVGA 11	800 x 600	38.000	60.510	40.128
MAC 16	832 x 624	49.720	74.550	57.283
XGA 1	1 024 x 768	48.360	60.000	65.000
XGA 2	1 024 x 768	68.677	84.997	94.504
XGA 3	1 024 x 768	60.023	75.030	78.750
XGA 4	1 024 x 768	56.476	70.070	75.000
XGA 5	1 024 x 768	60.310	74.920	79.252
XGA 6	1 024 x 768	48.500	60.020	65.179
XGA 7	1 024 x 768	44.000	54.580	59.129
XGA 8	1 024 x 768	63.480	79.350	83.410
XGA 9	1 024 x 768i	36.000	87.170	47.300
XGA 10	1 024 x 768	62.040	77.070	84.375
XGA 11	1 024 x 768	61.000	75.700	81.000
XGA 12	1 024 x 768i	35.522	86.960	44.900
XGA 13	1 024 x 768	46.900	58.200	63.030
XGA 14	1 024 x 768	47.000	58.300	61.664
XGA 15	1 024 x 768	58.030	72.000	74.745
MAC 19	1 024 x 768	60.240	75.080	80.010
SXGA 1	1 152 x 864	64.200	70.400	94.560
SXGA 2	1 280 x 1 024	62.500	58.600	108.000
SXGA 3	1 280 x 1 024	63.900	60.000	107.350
SXGA 4	1 280 x 1 024	63.340	59.980	108.180
SXGA 5	1 280 x 1 024	63.740	60.010	109.497
SXGA 6	1 280 x 1 024	71.690	67.190	117.004
SXGA 7	1 280 x 1 024	81.130	76.107	135.008
SXGA 8	1 280 x 1 024	63.980	60.020	108.000
SXGA 9	1 280 x 1 024	79.976	75.025	135.000
SXGA 10	1 280 x 960	60.000	60.000	108.000
SXGA 11	1 152 x 900	61.200	65.200	92.000
SXGA 12	1 152 x 900	71.400	75.600	105.100
SXGA 13	1 280 x 1 024i	50.000	86.000	80.000
SXGA 14	1 280 x 1 024i	50.000	94.000	80.000
SXGA 15	1 280 x 1 024	63.370	60.010	111.520
SXGA 16	1 280 x 1 024	76.970	72.000	130.080

Screen display mode	Resolution*1 (dots)	Scanning frequency		Dot clock frequency (MHz)
		Horizontal (kHz)	Vertical (Hz)	
SXGA 17	1 152 x 900	61.850	66.000	94.500
SXGA 18	1 280 x 1 024i	46.430	86.700	78.745
SXGA 19	1 280 x 1 024	63.790	60.180	108.190
SXGA 20	1 280 x 1 024	91.146	85.024	157.500
SXGA+ 1	1 400 x 1 050	63.970	60.190	107.990
SXGA+ 2	1 400 x 1 050	65.350	60.120	122.850
SXGA+ 3	1 400 x 1 050	65.120	59.900	122.430
SXGA+ 4	1 400 x 1 050	64.030	60.010	108.160
SXGA+ 5	1 400 x 1 050	62.500	58.600	108.000
SXGA+ 6	1 400 x 1 050	64.744	59.948	101.000
SXGA+ 7	1 400 x 1 050	65.317	59.978	121.750
MAC 21	1 152 x 870	68.680	75.060	100.000
MAC	1 280 x 960	75.000	75.080	126.000
MAC	1 280 x 1 024	80.000	75.080	135.200
WXGA 1	1 366 x 768	48.360	60.000	86.670
WXGA 2	1 360 x 768	47.700	60.000	86.670
WXGA 3	1 376 x 768	48.360	60.000	86.670
WXGA 4	1 360 x 768	56.160	72.000	100.190
WXGA 6	1 280 x 768	47.776	59.870	79.500
WXGA 7	1 280 x 768	60.289	74.893	102.250
WXGA 8	1 280 x 768	68.633	84.837	117.500
WXGA 9	1 280 x 800	49.600	60.050	79.360
WXGA 10	1 280 x 800	41.200	50.000	68.557
WXGA 11	1 280 x 800	49.702	59.810	83.500
WXGA 12	1 280 x 800	63.980	60.020	108.000
WXGA 17	1 280 x 800	58.289	69.975	98.858
WXGA 18	1 280 x 800	60.044	71.995	102.795
WXGA 19	1 280 x 800	62.790	74.928	106.492
WXGA 20	1 280 x 800	71.553	84.879	122.498
WXGA 21	1 280 x 800	55.993	69.991	94.964
WXGA 22	1 280 x 800	57.675	72.004	97.817
WUXGA 1*2	1 920 x 1 200	74.556	59.885	193.250
WUXGA 2	1 920 x 1 200	74.038	59.950	154.000
WSXGA+ 1	1 680 x 1 050	65.290	59.954	146.250
WXGA+ 1	1 440 x 900	55.935	59.887	106.500
WXGA+ 2	1 440 x 900	74.918	60.000	161.850
UXGA 1	1 600 x 1 200	75.000	60.000	162.000
UXGA 2*2	1 600 x 1 200	81.250	65.000	175.500
UXGA 3*2	1 600 x 1 200	87.500	70.000	189.000
UXGA 4*2	1 600 x 1 200	93.750	75.000	202.500
UXGA 5*2	1 600 x 1 200	106.250	85.000	229.500
720p	1 280 x 720	45.000	60.000	74.250
720p	1 280 x 720	37.500	50.000	74.250
1035i	1 920 x 1 035i	33.750	60.000	74.250
1080i	1 920 x 1 080i	33.750	60.000	74.250
	1 920 x 1 080i	28.125	50.000	74.250
1080p	1 920 x 1 080	33.750	30.000	74.250
	1 920 x 1 080	28.125	25.000	74.250
	1 920 x 1 080	27.000	24.000	74.250
	1 920 x 1 080	67.500	60.000	148.500
	1 920 x 1 080	56.250	50.000	148.500
1080psf/30	1 920 x 1 080	33.750	60.000	74.250
1080psf/25	1 920 x 1 080	28.125	50.000	74.250
1080psf/24	1 920 x 1 080	27.000	48.000	74.250

*1: The “i” after the resolution indicates an interlaced signal.
*2: Not compatible with [True] in [Screen].

When the signal is digital

Screen display mode	Resolution*1 (dots)	Scanning frequency		Dot clock frequency (MHz)
		Horizontal (kHz)	Vertical (Hz)	
D-VGA	640 x 480	31.470	59.940	25.175
D-480i*2	720 (1 440) x 480	15.734	59.940	27.000
D-576i*2	720 (1 440) x 576	15.625	50.000	27.000
D-480p	720 x 480	31.470	60.000	27.000
D-576p	768 x 576	31.250	50.000	27.000
D-SVGA	800 x 600	37.879	60.320	40.000
D-XGA	1 024 x 768	43.363	60.000	65.000
D-WXGA 1	1 366 x 768	48.360	60.000	86.670
D-WXGA 2	1 360 x 768	47.700	60.000	86.670
D-WXGA 3	1 376 x 768	48.360	60.000	86.670
D-WXGA 4	1 360 x 768	56.160	72.000	100.190
D-WXGA 5	1 366 x 768	46.500	50.000	67.400
D-WXGA 6	1 280 x 768	47.776	59.870	79.500
D-WXGA 7	1 280 x 768	60.289	74.893	102.250
D-WXGA 8	1 280 x 768	68.633	84.837	117.500
D-WXGA 9	1 280 x 800	49.600	60.050	79.360
D-WXGA 10	1 280 x 800	41.200	50.000	68.557
D-WXGA 11	1 280 x 800	49.702	59.810	83.500
D-WXGA 12	1 280 x 800	63.980	60.020	108.000
D-WXGA 17	1 280 x 800	58.289	69.975	98.858
D-WXGA 18	1 280 x 800	60.044	71.995	102.795
D-WXGA 19	1 280 x 800	62.790	74.928	106.492
D-WXGA 20	1 280 x 800	71.553	84.879	122.498
D-WXGA 21	1 280 x 800	55.993	69.991	94.964
D-WXGA 22	1 280 x 800	57.675	72.004	97.817
D-SXGA 1	1 280 x 1 024	63.980	60.020	108.000
D-SXGA 2	1 280 x 1 024	60.276	58.069	93.067
D-SXGA+ 1	1 400 x 1 050	63.970	60.190	107.990
D-SXGA+ 2	1 400 x 1 050	65.350	60.120	122.850
D-SXGA+ 3	1 400 x 1 050	65.120	59.900	122.430
D-SXGA+ 4	1 400 x 1 050	64.030	60.010	108.160
D-SXGA+ 5	1 400 x 1 050	62.500	58.600	108.000
D-SXGA+ 6	1 400 x 1 050	64.744	59.948	101.000
D-SXGA+ 7	1 400 x 1 050	65.317	59.978	121.750
D-UXGA	1 600 x 1 200	75.000	60.000	162.000
D-WUXGA 2	1 920 x 1 200	74.038	59.950	154.000
D-WSXGA+ 1	1 680 x 1 050	65.290	59.954	146.250
D-WXGA+ 1	1 440 x 900	55.935	59.887	106.500
D-720p	1 280 x 720	45.000	60.000	74.250
	1 280 x 720	37.500	50.000	74.250
D-1035i	1 920 x 1 035i	33.750	60.000	74.250
D-1080i	1 920 x 1 080i	33.750	60.000	74.250
	1 920 x 1 080i	28.125	50.000	74.250
D-1080psf/30	1 920 x 1 080	33.750	60.000	74.250
D-1080psf/25	1 920 x 1 080	28.125	50.000	74.250
D-1080psf/24	1 920 x 1 080	27.000	48.000	74.250
D-1080p	1 920 x 1 080	33.750	30.000	74.250
	1 920 x 1 080	28.125	25.000	74.250
	1 920 x 1 080	27.000	24.000	74.250
	1 920 x 1 080	67.500	60.000	148.500
	1 920 x 1 080	56.250	50.000	148.500

*1: The “i” after the resolution indicates an interlaced signal.
*2: Only compatible with signals using an HDMI cable connected to the <HDMI IN> terminal.

Note

- The number of display dots is 1 024 x 768.
- A signal with a different resolution will be projected after converting the resolution to match the projector display.
- When interlaced signals are connected, there may be flickering in the projected image.
- The projector is not compatible with signals with a dot clock frequency of 230 MHz or higher.

Specifications

The following table describes the specifications of the projector.

Model No.			LC-XT6
Power supply			AC 200 V - 240 V 50 Hz/60 Hz
Power consumption			200 V - 240 V 11 A 1 850 W
			When [Lamp power] in the [Setting] menu is set to eco-mode: 1 450 W Standby: 18 W
LCD panel		**Size**	4.57 cm (1.8") (aspect ratio 4:3)
		Display system	Three transparent LCD panels (RGB)
		Drive system	Polysilicon TFT active matrix system
		Number of pixels	786 432 pixels (1 024 x 768 dots) x 3 panels
Luminous lamp			380 W NSHA UHM lamp x 4
Light output			16 000 lm (ANSI) (when [lamp select] is set to [4-Lamps] and [Lamp power] is set to standard)
Image signals that can be projected			Refer to “List of compatible signals” (➡ page 99).
Color system			Six standards (NTSC/NTSC4.43/PAL/PAL-N/PAL-M/SECAM)
Screen size			1.02 m (40") – 15.24 m (600")
Screen aspect ratio			4:3
Projection method			Refer to “Projection method” (➡ page 24).
Contrast ratio			2 500:1 (when setting [Lamp power] to auto, and [Advanced color] to [Auto])
Terminals	**INPUT 1**	**DVI-D input terminal**	1 set, DVI-D 24 p Digital signal: TMDS (Transition Minimized Differential Signaling)
		HDMI input terminal	1 set, HDMI 19 pin (HDCP, Deep color compliant)
		COMPUTER input terminal	1 set (D-sub 15 p (female)) RGB signal: 0.7 V [p-p] 75 Ω (G-SYNC: 1.0 V [p-p] 75 Ω) HD/SYNC TTL high impedance, automatic positive/negative polarity compatible VD, TTL high impedance, automatic positive/negative polarity compatible
	INPUT 2	**Analog RGB input terminal**	1 set (BNC 5 p) RGB signal: 0.7 V [p-p] 75 Ω (G-SYNC: 1.0 V [p-p] 75 Ω) HD/SYNC TTL high impedance, automatic positive/negative polarity compatible VIDEO signal: 1.0 V [p-p] 75 Ω negative sync Y P_B/C_B P_R/C_R signal: Y: 1.0 V [p-p] negative sync, P_B/C_B: 0.7 V [p-p] 75 Ω, P_R/C_R: 0.7 V [p-p] 75 Ω
		S-VIDEO input terminal	1 set, Mini DIN 4 p Y 1.0 V [p-p], C 0.286 V [p-p] 75 Ω S1 signal compliant
	Serial input terminal		D-Sub 9 p 1 set, RS-232C-compatible computer control
	USB terminal (used by service personnel)		USB connector (1 set, series B)
	Wired remote control		Mini jack
	LAN terminal		1 set, RJ-45 for network connection, PJLink compliant, 10Base-T/100Base-TX

Model No.		LC-XT6
Power cable length		3.0 m (118-1/8")
Outer case		Molded plastic
Dimensions		Width: 650 mm (25-5/8") Height: 349 mm (13-3/4") (feet fully retracted) Depth: 815 mm (32-1/8") (feet fully retracted, not including lens)
Weight		Approx. 46.5 kg (102.5 lbs.)
Operating environment		Operating environment temperature*1: 5°C (41°F) to 40°C (104°F) Operating environment humidity: 20% to 80% (no condensation)
Remote control	Power supply	DC 3 V (AAA/R03/LR03 battery x 2)
	Operating range	Approx. 5 m (196-7/8") (within 30º in each direction)
	Weight	102 g (3.6 ozs.) (including batteries)
	Dimensions	Width: 48 mm (1-7/8") Height: 27 mm (1-1/8") Depth: 145 mm (5-3/4")

*1: The operating environment temperature may differ depending on the type of air filter used and when using the projector at high elevations.

- The product numbers of accessories and separately sold components are subject to change without notice.

Dimensions

<Unit: mm>

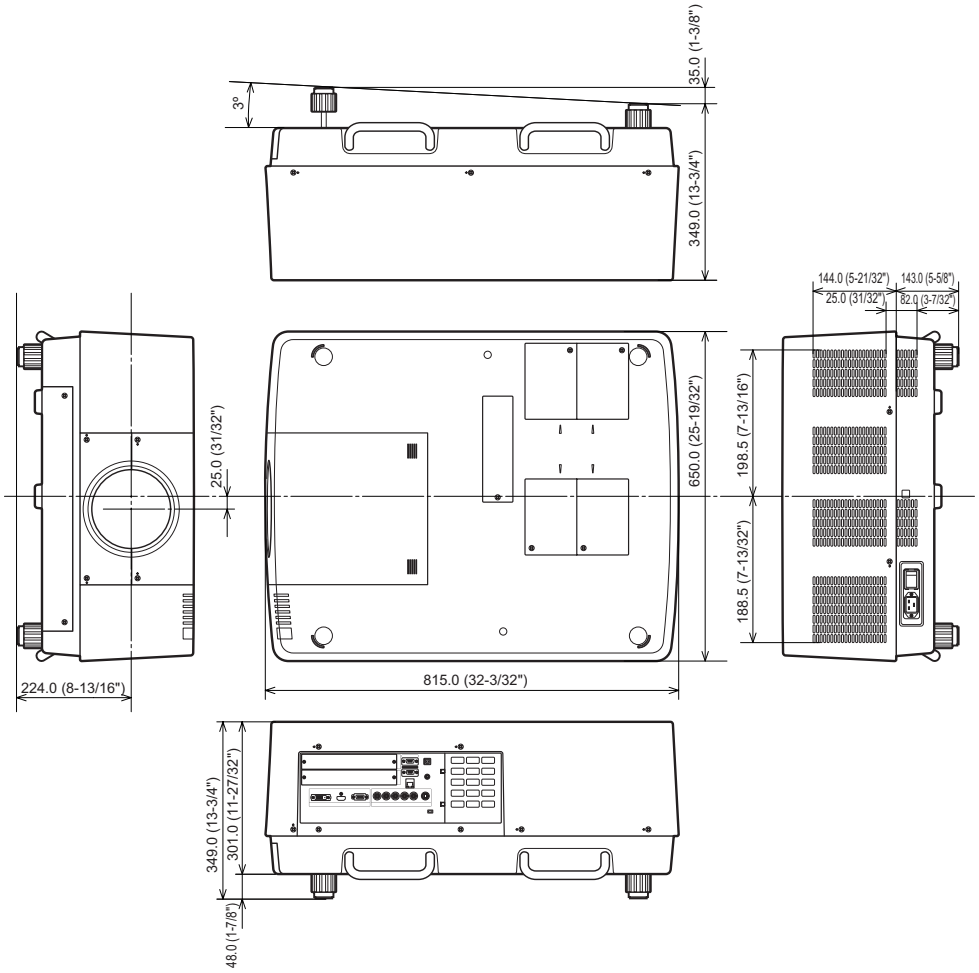

* Actual dimension may differ depending on the product.

Ceiling mount bracket safeguards

- Installation work of the ceiling mount bracket should only be performed by a qualified technician.
- EIKI takes no responsibility for any damage to the projector resulting from use of a ceiling mount bracket not manufactured by EIKI or the inappropriate choice of location for installation, even if the warranty period of the projector has not expired.
- An unused ceiling mount bracket must be removed promptly by a qualified technician.
- Use a torque driver or a hex torque driver when tightening the screws, and tighten them to a tightening torque within specified values. Do not use tools such as electric screwdrivers or impact screwdrivers.
- For details, read the installation manual that comes with the ceiling mount bracket.
- The product numbers of accessories and separately sold components are subject to change without notice.

Bottom view

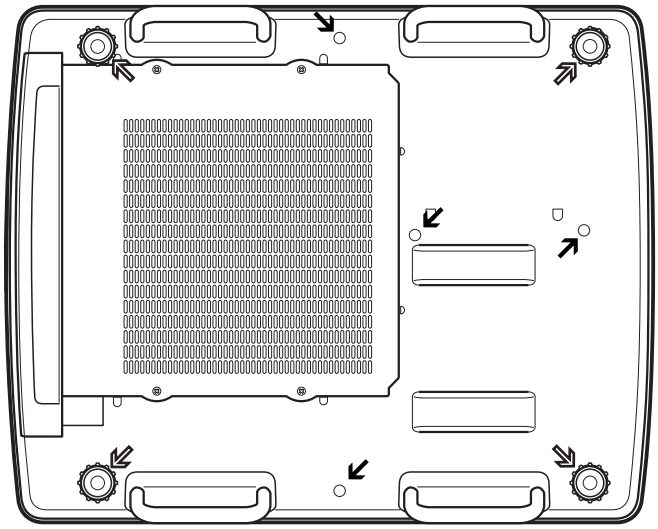

Screw holes for adjustable feet
(for use with ceiling mount bracket)
Screw diameter: M10
Depth: 40 mm

Screw holes for ceiling mount bracket
Screw diameter: M8
Depth: 32 mm

Screw fastening torque
M10: 20 ± 1 N·m
M8: 10 ± 0.5 N·m

Notes on attaching the lens

The technical staff or service personnel must attach the lens according to the instruction manual supplied with the optional lens.

- Use the light-shielding plates, lens attachment, spacer, and lens lock lever fixing bracket supplied with the projector when attaching the lens. For details, refer to the instruction manual supplied with the optional lens.

Lens specifications

Refer to the following tables for the lens specifications.
All measurements in the following tables are approximate. They may differ slightly from the actual measurements.

■ Projection distance and screen size

	Projection distance (m)																
Lens No.	AH-21202		AH-32022	AH-32401		AH-32601		AH-21102		AH-22051		AH-21092		AH-32581		AH-21023	
Screen size (m ("))	TELE	WIDE	FIXED	TELE	WIDE	TELE	WIDE	TELE	WIDE	TELE	WIDE	TELE	WIDE	TELE	WIDE	TELE	WIDE
1.02 (40")	1.4	1.1	0.6	1.6	1.2	1.2	0.9	2.0	1.5	—	—	5.1	3.7	7.6	5.3	3.7	2.9
1.52 (60")	2.2	1.7	0.9	2.4	1.8	1.8	1.4	3.1	2.3	—	—	7.6	5.5	11.2	7.7	5.5	4.3
2.03 (80")	2.9	2.2	1.3	3.2	2.4	2.4	1.9	4.2	3.2	—	—	10.1	7.3	14.8	10.2	7.3	5.6
2.54 (100")	3.7	2.8	1.6	4.1	3.1	3.1	2.4	5.3	4.0	7.1	5.2	12.5	9.0	18.4	12.7	9.1	7.0
3.05 (120")	4.4	3.4	1.9	4.9	3.7	3.7	2.9	6.4	4.8	8.6	6.3	15.0	10.8	22.0	15.1	10.9	8.4
3.81 (150")	5.6	4.3	2.4	6.2	4.7	4.7	3.6	8.0	6.1	10.7	7.9	18.7	13.4	27.5	18.8	13.6	10.5
4.57 (180")	6.7	5.1	2.9	7.4	5.7	5.6	4.3	9.6	7.4	12.9	9.5	22.4	16.1	32.9	22.5	16.3	12.6
5.08 (200")	7.5	5.7	3.3	8.3	6.3	6.2	4.8	10.7	8.2	14.4	10.6	24.9	17.8	36.5	24.9	18.1	14.0
6.35 (250")	9.3	7.2	4.1	10.4	7.9	7.8	6.0	13.5	10.3	18.0	13.3	31.0	22.2	45.5	31.1	22.6	17.5
7.62 (300")	11.2	8.6	4.9	12.5	9.5	9.4	7.3	16.2	12.4	21.6	16.0	37.2	26.6	54.6	37.2	27.1	20.9
8.89 (350")	13.1	10.1	5.8	14.6	11.1	11.0	8.5	18.9	14.5	25.3	18.7	43.4	31.0	63.6	43.4	31.5	24.4
10.16 (400")	15.0	11.5	6.6	16.7	12.7	12.6	9.7	21.7	16.6	28.9	21.4	49.5	35.4	72.6	49.5	36.0	27.9
12.70 (500")	18.8	14.4	8.3	20.9	15.9	15.8	12.1	27.1	20.8	36.2	26.8	61.9	44.2	90.7	61.8	45.0	34.8
15.24 (600")	22.5	17.3	9.9	25.1	19.2	18.9	14.6	32.6	25.0	43.4	32.2	74.2	53.0	108.8	74.1	54.0	41.8

■ Lens shift and optical axis ratio

	Lens No.		AH-21202	AH-32022	AH-32401	AH-32601	AH-21102	AH-22051	AH-21092	AH-32581	AH-21023
Lens shift/ optical axis ratio	Vertical (max.)	H1	0	1	0	0	0	0	0	0	0
		H2	10	1	10	10	10	10	10	10	10
	Horizontal (max.)	W1	2	1	2	1	2	2	2	2	2
		W2	3	1	3	1	3	3	3	3	3

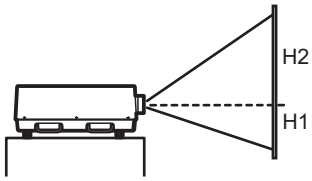

Lens shift (Uppermost)

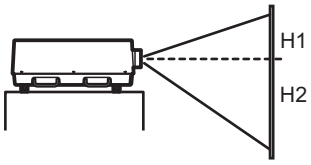

Lens shift (Downmost)

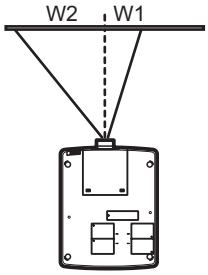

Lens shift (Leftmost)

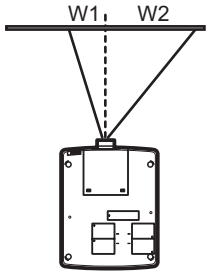

Lens shift (Rightmost)

Light-shielding plate for each lens

Three types of light-shielding plates are supplied with the projector. Use the light-shielding plate that corresponds to the appropriate lens. Refer to the following table.

Accessory (product name)	Lens Product No.
Light-shielding plate-1 (T0CRS0008--1) 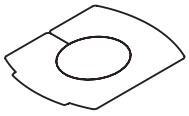	AH-32022*1
Light-shielding plate-2 (T0CRM0014--1) 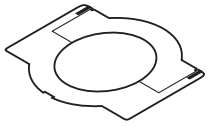 Ⓛ is inscribed	AH-32401, AH-32601, AH-21102, AH-22051, AH-32581
Light-shielding plate-3 (T0CRM0013--1) 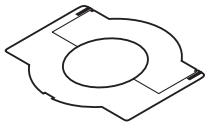 Ⓢ is inscribed	AH-21202, AH-32022*1, AH-21092, AH-21023

*1: Use the light-shielding plate-1 and light-shielding plate-3 together.

Attention

- The light-shielding plate-2 and light-shielding plate-3 should be separated to the upper and lower plates.

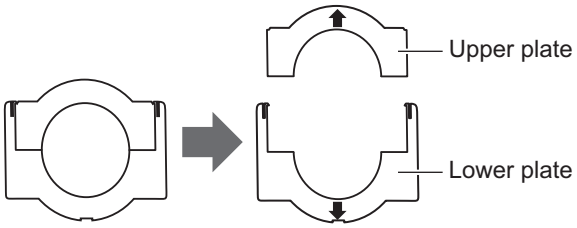

Information for Users on Collection and Disposal of Old Equipment and used Batteries

These symbols on the products, packaging, and/or accompanying documents mean that used electrical and electronic products and batteries should not be mixed with general household waste. For proper treatment, recovery and recycling of old products and used batteries, please take them to applicable collection points, in accordance with your national legislation and the Directives 2002/96/EC and 2006/66/EC.

By disposing of these products and batteries correctly, you will help to save valuable resources and prevent any potential negative effects on human health and the environment which could otherwise arise from inappropriate waste handling.

For more information about collection and recycling of old products and batteries, please contact your local municipality, your waste disposal service or the point of sale where you purchased the items.

Penalties may be applicable for incorrect disposal of this waste, in accordance with national legislation.

Cd

For business users in the European Union
If you wish to discard electrical and electronic equipment, please contact your dealer or supplier for further information.

Information on Disposal in other Countries outside the European Union
These symbols are only valid in the European Union. If you wish to discard these items, please contact your local authorities or dealer and ask for the correct method of disposal.

Note for the battery symbol (bottom two symbol examples):
This symbol might be used in combination with a chemical symbol. In this case it complies with the requirement set by the Directive for the chemical involved.

Environment care information for users in China

This symbol is only valid in China.

EIKI

U.S.A.

EIKI International, Inc.
30251 Esperanza
Rancho Santa Margarita
CA 92688-2132
U.S.A.
Tel : 800-242-3454 (949)-457-0200
Fax : 800-457-3454 (949)-457-7878
E-Mail : usa@eiki.com

Canada

EIKI CANADA - Eiki International, Inc.
P.O. Box 156, 310 First St. - Unit 2,
Midland, ON, L4R 4K8, Canada
Tel : 800-563-3454 (705)-527-4084
Fax : 800-567-4069 (705)-527-4087
E-Mail : canada@eiki.com

Deutschland & Österreich

EIKI Deutschland GmbH
Am Frauwald 12
65510 Idstein
Deutschland
Tel : 06126-9371-0
Fax : 06126-9371-14
E-Mail : info@eiki.de

Eastern Europe

EIKI CZECH SPOL. s.r.o.
Nad Cementárnou 1163/4a
Praha 4, Podolí
147 00
Czech Republic
Tel : +420 241 410 928
+420 241 403 095
Fax: +420 241 409 435
E-Mail : info@eiki.cz

China

EIKI (Shanghai) Co., Ltd.
Lakeside Oasis Middle Ring Business Centre
Block 10. #16-07,
1628, Jin Sha Jiang Road,
Shanghai, 200333. China
Main Line : 86-21-3251-3993
Service Hot Line : 86-21-3251-3995
Fax : 86-21-3251-3997
E-mail : info@eiki-china.com

South East Asia

EIKI Industrial (M) Sdn Bhd
No. 3A-2C, 4th Floor, Jalan PJU 8/3A,
Perdana Business Centre,
Bandar Damansara Perdana,
47820 Petaling Jaya, Selangor
Malaysia
Tel : +603-7722-4362
Fax : +603-7722-4392
E-Mail : sales@eiki.my

Worldwide

EIKI Industrial Company Limited.
6-23 Teramoto, Itami-shi,
Hyogo, 664-0026 Japan
Tel : +81-72-782-7552
Fax : +81-72-782-7590

WorldWide Website http://www.eiki.com

M1112NS0 -YI

© 2012 Eiki International, Inc.