USA's primary source for projector lamps
myprojectorlamps

PROJECTOR OWNER'S MANUAL

Eiki

LC-X8K

Need a replacement lamp for this projector?

www.myprojectorlamps.com

Original manufacturer manual, provided unmodified as a courtesy of MyProjectorLamps.com.
All trademarks belong to their respective owners.

EIKI

MULTIMEDIA PROJECTOR

MODEL LC-X8K

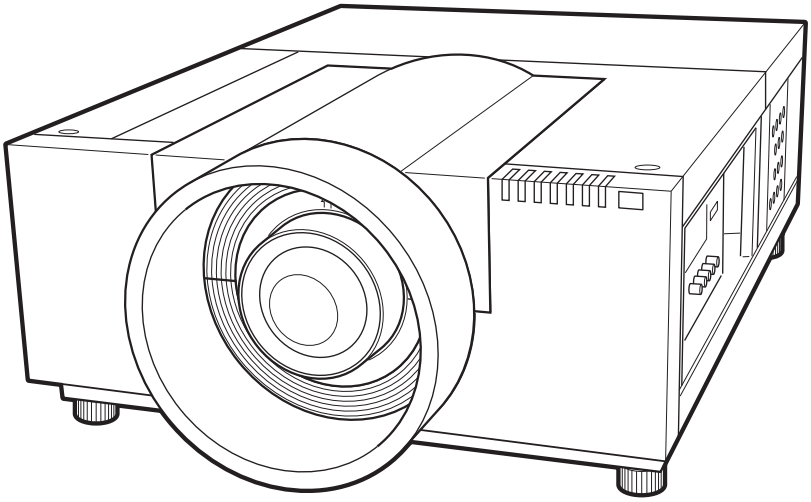

∗Projection lens is optional.

OWNER'S MANUAL

Features and Design

This Multimedia Projector is designed with most advanced technology for portability, durability, and ease of use. This projector utilizes built-in multimedia features, a palette of 1.07 billion colors, and matrix liquid crystal display (LCD) technology.

◆ Functionally Rich

This projector has many useful functions such as lens shifting, ceiling and rear projection, perpendicular omnidirectional projection, variety of lens options, etc.

◆ Simple Computer System Setting

The projector has the Multi-scan system to conform to almost all computer output signals quickly (p.34). Supported resolution up to WUXGA.

◆ Useful Functions for Presentation

Digital zoom function allows you to focus on the crucial information during a presentation (pp.29, 40).

◆ Security Function

The Security function helps you to ensure security of the projector. With the Key lock function, you can lock the operation on the side control or remote control (p.53). PIN code lock functions prevents unauthorized use of the projector (pp.53–54).

◆ Lamp Control

Brightness of the projection lamp can be selected (p.51).

◆ Power Management

The Power management function reduces power consumption and maintains lamp life (p.52).

◆ Automatic Filter Replacement Function

The projector monitors the condition of the filter and replaces a filter automatically when it detects the clogging.

◆ Helpful Maintenance Functions

Lamp and filter maintenance functions provide for better and proper maintenance of the projector.

◆ Multilanguage Menu Display

Operation menu is available in 12 languages; English, German, French, Italian, Spanish, Portuguese, Dutch, Swedish, Russian, Chinese, Korean, and Japanese (p.48).

◆ Logo Function

The Logo function allows you to customize the screen logo (pp.49–50). You can capture an image for the screen logo and use it for the starting-up display or between presentations.

◆ Motor-driven Lens Shift

Projection lens can be moved up, down, right and left with the motor-driven lens shift function. This function makes it easy to provide projected image where you want. Zoom and focus can also be adjusted with a motor-driven operation. (p.27)

*Zoom and focus functions may not operate depending on the optional lens.

◆ Multi Versatile Platform

This projector applies various input/output terminals and 2 terminal slots for expansion to tune to diversity of signals from computers and video equipment (p.19). For optional interface boards, contact sales dealer where you purchased the projector.

◆ Shutter Function

The projector is equipped with the shutter that provides complete blackness for a while the projected image is not needed with keeping the projector on. The Shutter management function allows you to set the timer. It prevents leaving the projector on with the shutter closed for a long time. (p.55)

◆ Network board (Optional)

Network board is an optional product to control and set up the projector via the network cables with the web browser on your computer. It can be controlled and set up the projector remotely. Contact the sales dealer where you purchased this projector for optional parts.

✔***Note:***

- The On-Screen Menu and figures in this manual may differ slightly from the product.
- The contents of this manual are subject to change without notice.

Table of Contents

Features and Design 2
Table of Contents 3
To The Owner 4
Safety Instructions 5
Air Circulation 6
Installing the Projector in Proper Directions 7
Moving the Projector 8
Compliance 9
Part Names and Functions. 10
Front 10
Back 10
Terminals and Connectors 11
Side Control and Indicators 12
Side Control 12
Indicators 13
Remote Control 14
Remote Control Battery Installation 15
Remote Control Receivers and Operating Range 15
Wired Remote Control 15
Remote Control Code 16
Installation 17
Lens Installation 17
Positioning Projector 17
Lens Shift Adjustment 18
Picture Level and Pitch Adjustment 18
Terminals of Projector 19
Connecting to Computer 20
Connecting to Video Equipment 21
Connecting the AC Power Cord 22
Basic Operation 23
Turning On the Projector 23
Turning Off the Projector 24
How to Operate the On-Screen Menu 25
Menu Bar 26
Operating with Projector Control 27
Operating with Remote Control 29
Input Selection 31
Input 31
Computer Input Source Selection 32
Video Input Source Selection 33
Computer Input 34
Computer System Selection 34
Auto PC Adjustment 35
Manual PC Adjustment 36
Image Level Selection 38
Screen Size Adjustment 39
Video Input 41
Video System Selection 41
Image Level Selection 42
Screen Size Adjustment 43
Picture Image 45
Image Adjustment 45
Setting 48
Setting 48
Maintenance and Care 57
Filter Instructions 57
Replacing the Filter Cartridge 58
Resetting the Filter Counter 59
Resetting the Scroll Counter 59
Lamp Management 60
Lamp Replacement 61
Resetting the Lamp Counter 62
Cleaning the Projection Lens 64
Cleaning the Projector Cabinet 64
Warning Indicators 65
Appendix 66
Troubleshooting 66
Menu Tree 69
Indicators and Projector Condition 72
Compatible Computer Specifications 75
Technical Specifications 77
Optional Parts 78
Configurations of Terminals 79
PIN Code Number Memo 80
Dimensions 81
Serial Control Interface 82

Trademarks

Each name of corporations or products in this book is either a registered trademark or a trademark of its respective corporation.

To The Owner

Before installing and operating the projector, read this manual thoroughly.
The projector provides many convenient features and functions. Operating the projector properly enables you to manage those features and maintains it in good condition for many years to come.
Improper operation may result in not only shortening the product life, but also malfunctions, fire hazard, or other accidents.
If your projector seems to operate improperly, read this manual again, check operations and cable connections and try the solutions in the "Troubleshooting" section in the back of this manual. If the problem still persists, contact the dealer where you purchased the projector or the service center.

CAUTION

RISK OF ELECTRIC SHOCK
DO NOT OPEN

CAUTION: TO REDUCE THE RISK OF ELECTRIC SHOCK, DO NOT REMOVE COVER (OR BACK). NO USER-SERVICEABLE PARTS INSIDE EXCEPT LAMP REPLACEMENT. REFER SERVICING TO QUALIFIED SERVICE PERSONNEL.

THIS SYMBOL INDICATES THAT DANGEROUS VOLTAGE CONSTITUTING A RISK OF ELECTRIC SHOCK IS PRESENT WITHIN THIS UNIT.

THIS SYMBOL INDICATES THAT THERE ARE IMPORTANT OPERATING AND MAINTENANCE INSTRUCTIONS IN THE OWNER'S MANUAL WITH THIS UNIT.

The symbol mark and recycling systems described below apply to EU countries and do not apply to countries in other areas of the world.
Your product is designed and manufactured with high quality materials and components which can be recycled and/or reused.
The symbol mark means that electrical and electronic equipment, batteries and accumulators, at their end-of-life, should be disposed of separately from your household waste.

Note:
If a chemical symbol is printed beneath the symbol mark, this chemical symbol means that the battery or accumulator contains a heavy metal at a certain concentration. This will be indicated as follows: Hg: mercury, Cd: cadmium, Pb: lead.
In the European Union there are separate collection systems for used electrical and electronic equipment, batteries and accumulators.
Please, dispose of them correctly at your local community waste collection/recycling centre.

Please, help us to conserve the environment we live in!

READ AND KEEP THIS OWNER'S MANUAL FOR LATER USE.

Safety Precaution

WARNING:
- **THIS APPARATUS MUST BE EARTHED.**
- **TO REDUCE THE RISK OF FIRE OR ELECTRIC SHOCK, DO NOT EXPOSE THIS APPLIANCE TO RAIN OR MOISTURE.**

– This projector produces intense light from the projection lens. Do not stare directly into the lens, otherwise eye damage could result. Be especially careful that children do not stare directly into the beam.
– Install the projector in a proper position. Otherwise it may result in a fire hazard.
– Allowing the proper amount of space on the top, sides, and rear of the projector cabinet is critical for proper air circulation and cooling of the unit. The diagrams shown here indicates the minimum space required. If the projector is to be built into a compartment or similarly enclosed, these minimum distances must be maintained.
– Do not cover the ventilation slots on the projector. Heat build-up can reduce the service life of your projector, and can also be dangerous.

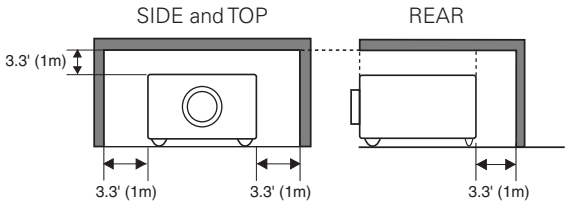

– If the projector is unused for an extended time, unplug the projector from the power outlet.
– Do not project the same image for a long time, since the afterimage may remain on the LCD panels by the characteristic of panel.

CAUTION ON HANGING FROM THE CEILING

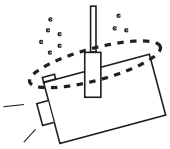

When hanging the projector from the ceiling, clean the air intake vents and top of the projector periodically with a vacuum cleaner. If you leave the projector unclean for a long time, the cooling fans can be clogged with dust, and it may cause a breakdown or a disaster.

DO NOT SET THE PROJECTOR IN GREASY, WET, OR SMOKY CONDITIONS SUCH AS IN A KITCHEN TO PREVENT A BREAKDOWN OR A DISASTER. IF THE PROJECTOR COMES IN CONTACT WITH OIL OR CHEMICALS, IT MAY BECOME DETERIORATED.

CAUTION

Not for use in a computer room as defined in the Standard for the Protection of Electronic Computer/Data Processing Equipment, ANSI/NFPA 75.

Ne peut être utilisé dans une salle d'ordinateurs telle que définie dans la norme ANSI/NFPA 75 Standard for Protection of Electronic Computer/Data Processing Equipment.

Safety Instructions

All the safety and operating instructions should be read before the product is operated.

Read all of the instructions given here and retain them for later use. Unplug this projector from AC power supply before cleaning. Do not use liquid or aerosol cleaners. Use a damp cloth for cleaning.

Follow all warnings and instructions marked on the projector.

For added protection to the projector during a lightning storm, or when it is left unattended and unused for long periods of time, unplug it from the wall outlet. This will prevent damage due to lightning and power line surges.

Do not expose this unit to rain or use near water... for example, in a wet basement, near a swimming pool, etc...

Do not use attachments not recommended by the manufacturer as they may cause hazards.

Do not place this projector on an unstable cart, stand, or table. The projector may fall, causing serious injury to a child or adult, and serious damage to the projector. Use only with a cart or stand recommended by the manufacturer, or sold with the projector. Wall or shelf mounting should follow the manufacturer's instructions, and should use a mounting kit approved by the manufacturers.

An appliance and cart combination should be moved with care. Quick stops, excessive force, and uneven surfaces may cause the appliance and cart combination to overturn.

Slots and openings in the back and bottom of the cabinet are provided for ventilation, to ensure reliable operation of the equipment and to protect it from overheating.

The openings should never be covered with cloth or other materials, and the bottom opening should not be blocked by placing the projector on a bed, sofa, rug, or other similar surface. This projector should never be placed near or over a radiator or heat register.

This projector should not be placed in a built-in installation such as a book case unless proper ventilation is provided.

Never push objects of any kind into this projector through cabinet slots as they may touch dangerous voltage points or short out parts that could result in a fire or electric shock. Never spill liquid of any kind on the projector.

Do not install the projector near the ventilation duct of air-conditioning equipment.

This projector should be operated only from the type of power source indicated on the marking label. If you are not sure of the type of power supplied, consult your authorized dealer or local power company.

Do not overload wall outlets and extension cords as this can result in fire or electric shock. Do not allow anything to rest on the power cord. Do not locate this projector where the cord may be damaged by persons walking on it.

Do not attempt to service this projector yourself as opening or removing covers may expose you to dangerous voltage or other hazards. Refer all servicing to qualified service personnel.

Unplug this projector from wall outlet and refer servicing to qualified service personnel under the following conditions:

a. When the power cord or plug is damaged or frayed.
b. If liquid has been spilled into the projector.
c. If the projector has been exposed to rain or water.
d. If the projector does not operate normally by following the operating instructions. Adjust only those controls that are covered by the operating instructions as improper adjustment of other controls may result in damage and will often require extensive work by a qualified technician to restore the projector to normal operation.
e. If the projector has been dropped or the cabinet has been damaged.
f. When the projector exhibits a distinct change in performance-this indicates a need for service.

When replacement parts are required, be sure the service technician has used replacement parts specified by the manufacturer that have the same characteristics as the original part. Unauthorized substitutions may result in fire, electric shock, or injury to persons.

Upon completion of any service or repairs to this projector, ask the service technician to perform routine safety checks to determine that the projector is in safe operating condition.

NOTE FOR CUSTOMERS IN THE US

(Hg) LAMP(S) INSIDE THIS PRODUCT CONTAIN MERCURY AND MUST BE RECYCLED OR DISPOSED OF ACCORDING TO LOCAL, STATE OR FEDERAL LAWS.

Air Circulation

Openings in the cabinet are provided for ventilation. To ensure reliable operation of the product and to protect it from overheating, these openings must not be blocked or covered.

CAUTION

Hot air is exhausted from the exhaust vent. When using or installing the projector, the following precautions should be taken.

–Do not put any flammable object or spray can near the projector, hot air is exhausted from the air vents.
–Keep the exhaust vent at least 3' (1 m) away from any objects.
–Do not touch peripheral parts of the exhaust vent, especially screws and metallic parts. These areas will become hot while the projector is being used.
–Do not put anything on the cabinet. Objects put on the cabinet will not only get damaged but also may cause fire hazard by heat.
–Do not cover vents with papers or other materials.
–Make sure that there are no objects under the projector. An object under the projector may prevent the projector from taking cooling air through bottom vent.

Cooling fans are provided to cool down the projector. The fans' running speed is changed according to the temperature inside the projector.

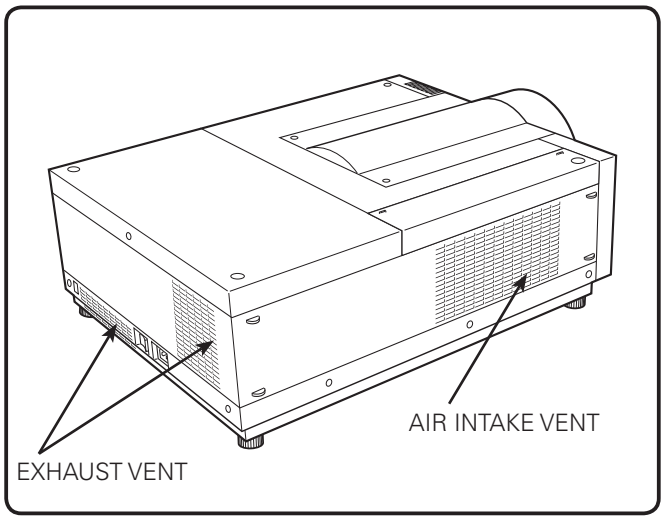

IMPORTANT!

Filter Maintenance!!

The projector uses a lamp which generates significant heat. The cooling fans and air vents are provided to dissipate the heat by drawing air into the housing and the filter is located in the intake vents to prevent dust from getting inside of the projector.

In order to care for the projector appropriately, regular cleaning is required. Remove any dirt or dust that has accumulated on the projector.

If the projector reaches a time set in the timer setting, a Filter replacement icon (Fig. 1) appears on the screen and WARNING FILTER indicator on the top panel lights up (see below), indicating that the filter replacement is necessary.

If the projector detects that the filter is clogged and no scroll is left in the filter cartridge, a Filter cartridge replacement icon (Fig. 2) appears on the screen and WARNING FILTER indicator on the top panel lights up (see below). Stop using the projector immediately and replace the filter cartridge.

Blocking the air vents and leaving the projector uncleaned for a long time may not only damage the projector and may require costly repairs but may also cause accidents or fire.

For maintenance of the filter, refer to "Filter counter" on page 56 and "Maintenance and Care" on pages 57–59.

Damages to the projector caused by using an uncleaned filter or improper maintenance will void the warranty on the projector.

Top Panel

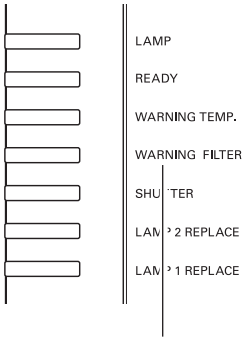

WARNING FILTER indicator

Fig.1 Filter replacement icon

Fig.2 Filter cartridge replacement icon

Installing the Projector in Proper Directions

Use the projector properly in specified positions. Improper positioning may reduce the lamp life and result in severe accident or fire hazard.
This projector can project the picture in upward, downward, or inclined position in perpendicular direction to the horizontal plane.

✔***Note:***

- To inverse or reverse the image, set the ceiling function to "On." (pp. 40, 44)
- The projector can not be operated at an altitude above 3,000 meters.

Positioning Precautions

Avoid positioning the projector as described below when installing.

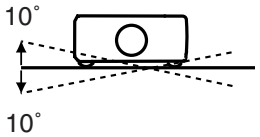

Do not roll the projector more than 10 degrees from side to side.

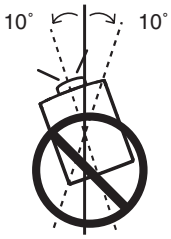

In upward projection, do not tilt the projector over 10 degrees right and left.

Do not put the projector on either side to project an image.

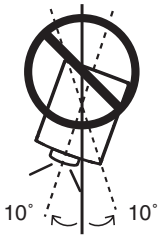

In downward projection, do not tilt the projector over 10 degrees right and left.

CAUTION ON CEILING MOUNTING

For ceiling mounting, you need the ceiling mount kit designed for this projector. When not mounted properly, the projector may fall, causing hazards or injury. For details, consult your dealer. The warranty on this projector does not cover any damage caused by use of any non-recommended ceiling mount kit or installation of the ceiling mount kit in an improper location.

Moving the Projector

Retract the adjustable feet to prevent damage to lens and cabinet. For safety, holding the projector on both sides by 2 or more people is recommended to move the projector because the projector is heavy. When moving the projector by one person from necessity, hold the handle carefully. Do not hold the lens mount cover. Moving it improperly may result in damage of cabinet or person's injury.

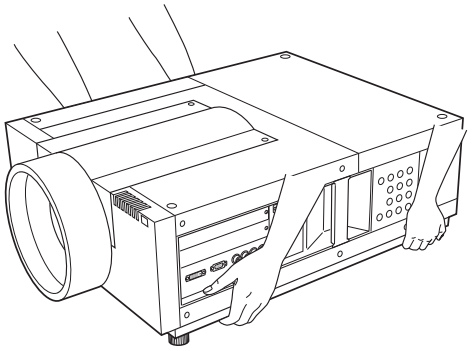

CAUTION IN CARRYING OR TRANSPORTING THE PROJECTOR

–Do not drop or bump the projector, otherwise damages or malfunctions may result.
–When carrying the projector, use a suitable carrying case.
–Do not transport the projector by courier or any other transport service in an unsuitable transport case. This may cause damage to the projector. For information about transporting the projector by courier or any other transport service, consult your dealer.
–Do not put the projector in a case before it is cooled enough.
–Do not transport the projector with a replacement lens installed.

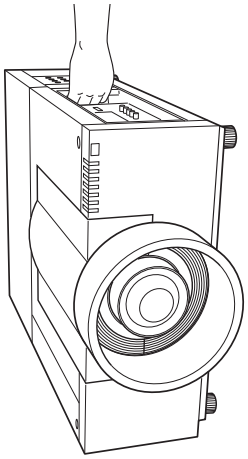

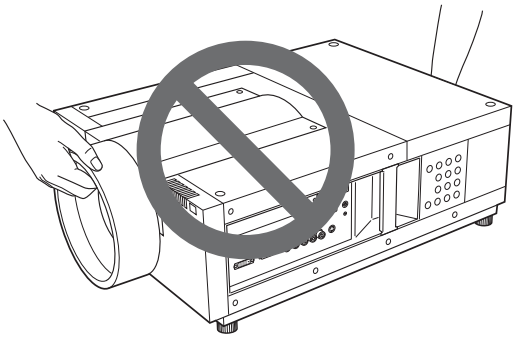

Compliance

Federal Communications Commission Notice

This equipment has been tested and found to comply with the limits for a Class A digital device, pursuant to Part 15 of FCC Rules. These limits are designed to provide reasonable protection against harmful interference when the equipment is operated in a commercial environment. This equipment generates, uses, and can radiate radio frequency energy and, if not installed and used in accordance with the instruction manual, may cause harmful interference to radio communications. Operation of this equipment in a residential area is likely to cause harmful interference in which case the user will be required to correct the interference at his own expense.

Do not make any changes or modifications to the equipment unless otherwise specified in the instructions. If such changes or modifications should be made, you could be required to stop operation of the equipment.

Canadian Radio Interference Regulations

This Class A digital apparatus meets all requirements of the Canadian ICES-003.

WARNING

This is a Class A product. In a domestic environment this product may cause radio interference in which case the user may be required to take adequate measures.

AC Power Cord Requirement

The AC Power Cord supplied with this projector meets the requirement for use in the country you purchased it.

AC Power Cord for the United States and Canada:

AC Power Cord used in the United States and Canada is listed by the Underwriters Laboratories (UL) and certified by the Canadian Standard Association (CSA).

AC Power Cord has a grounding-type AC line plug. This is a safety feature to be sure that the plug will fit into the power outlet. Do not try to defeat this safety feature. Should you be unable to insert the plug into the outlet, contact your electrician.

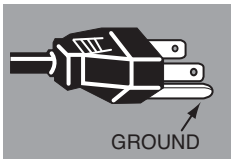

AC Power Cord for the United Kingdom:

This cord is already fitted with a moulded plug incorporating a fuse, the value of which is indicated on the pin face of the plug. Should the fuse need to be replaced, an ASTA approved BS 1362 fuse must be used of the same rating, marked thus ⟐. If the fuse cover is detachable, never use the plug with the cover omitted. If a replacement fuse cover is required, ensure it is of the same colour as that visible on the pin face of the plug (i.e. red or orange). Fuse covers are available from the Parts Department indicated in your User Instructions.

If the plug supplied is not suitable for your socket outlet, it should be cut off and destroyed.

The end of the flexible cord should be suitably prepared and the correct plug fitted.

WARNING: A PLUG WITH BARED FLEXIBLE CORD IS HAZARDOUS IF ENGAGED IN A LIVE SOCKET OUTLET.

The Wires in this mains lead are coloured in accordance with the following code:

Green-and-yellow ····· Earth
Blue ····· Neutral
Brown ····· Live

As the colours of the wires in the mains lead of this apparatus may not correspond with the coloured markings identifying the terminals in your plug proceed as follows:

The wire which is coloured green-and-yellow must be connected to the terminal in the plug which is marked by the letter E or by the safety earth symbol ⏚ or coloured green or green-and-yellow.

The wire which is coloured blue must be connected to the terminal which is marked with the letter N or coloured black.

The wire which is coloured brown must be connected to the terminal which is marked with the letter L or coloured red.

WARNING: THIS APPARATUS MUST BE EARTHED.

THE SOCKET-OUTLET SHOULD BE INSTALLED NEAR THE EQUIPMENT AND EASILY ACCESSIBLE.

Part Names and Functions

Front

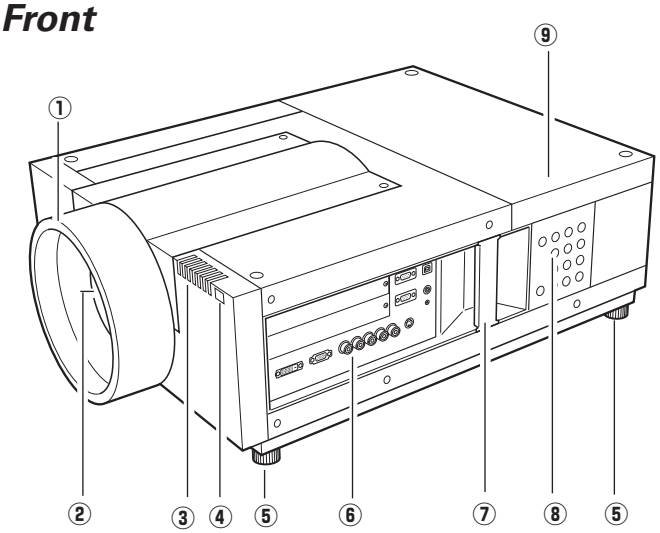

① **Lens Mount Cover**
② **Projection Lens (Option)**
③ **Indicators**
④ **Infrared Remote Receiver (Front)**

⑤ **Adjustable Feet**
⑥ **Terminals and Connectors**
⑦ **Handle**
⑧ **Side Control**
⑨ **Lamp Cover**

Back

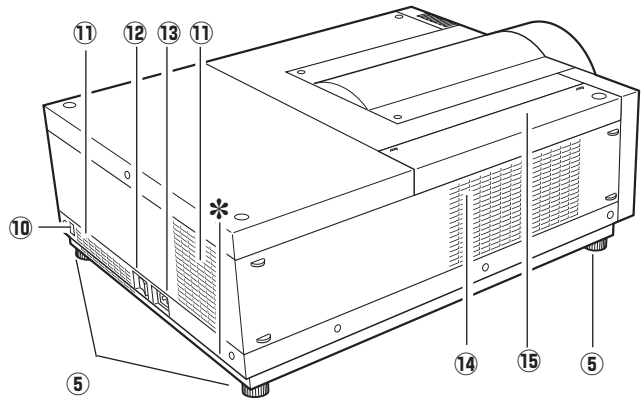

⑩ **Infrared Remote Receiver (Rear)**
⑪ **Exhaust Vent**

CAUTION

Hot air is exhausted from the exhaust vent. Do not put heat-sensitive objects near this side.

⑫ **Main On/Off Switch**
⑬ **Power Cord Connector**
⑭ **Air Intake Vent**
⑮ **Air Filter Cover**

✻Kensington Security Slot
This slot is for a Kensington lock used to deter theft of the projector.
*Kensington is a registered trademark of ACCO Brands Corporation.

Terminals and Connectors

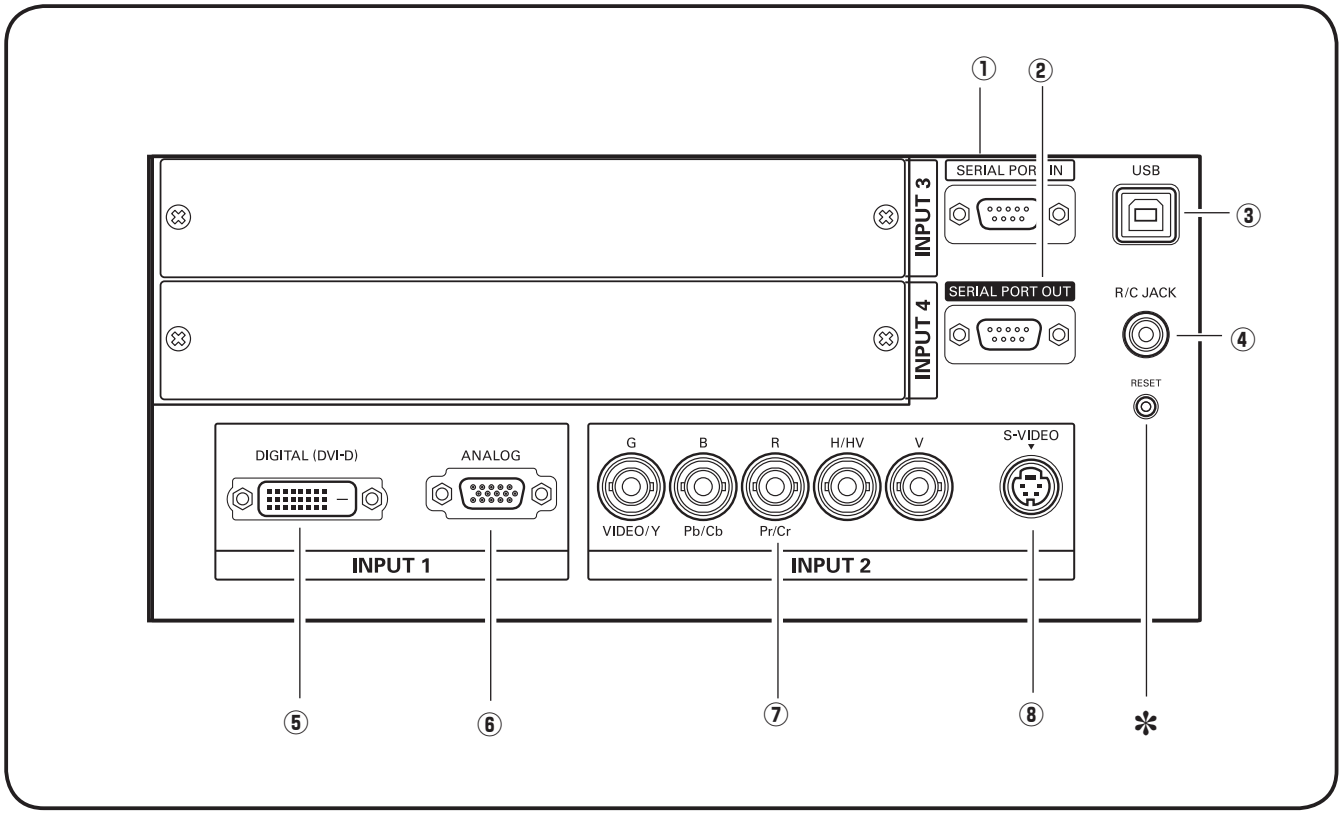

① **SERIAL PORT IN TERMINAL**
If you control the projector by computer, you must connect a cable (not supplied) from your computer to this terminal.

② **SERIAL PORT OUT TERMINAL**
This terminal outputs signal from SERIAL PORT IN. More than two projectors can be controlled with one computer by connecting SERIAL PORT IN of another projector to this terminal.

③ **USB CONNECTOR (Series B)**
USB connector is to used to service the projector.

④ **R/C JACK**
When using the wired remote control, connect the wired remote control to this jack with a remote control cable (supplied).

⑤ **DVI INPUT TERMINAL**
Connect computer output (Digital/DVI-D type) to this terminal. (p.20)
HD (HDCP Compatible) signal can be also connected. (p.21)

⑥ **D-sub 15-PIN INPUT TERMINAL**
Connect computer output (Analog D-sub 15-pin type) to this terminal. (p.20)

⑦ **5 BNC INPUT JACKS**
Connect the component or composite video output signal from video equipment to VIDEO/Y, Pb/Cb, and Pr/Cr jacks or connect the computer output signal (5 BNC Type [Green, Blue, Red, Horiz. Sync, and Vert. Sync.]) to G, B, R, H/V, and V jacks (pp.20–21).

⑧ **S-VIDEO INPUT JACK**
Connect the S-VIDEO output signal from video equipment to this jack (p.21).

✻ **RESET button**
A built-in micro processor which controls this unit may occasionally malfunction and need to be reset. This can be done by pressing the RESET button with a pen, which will shut down and restart the unit. Do not use the RESET function excessively.

Side Control and Indicators

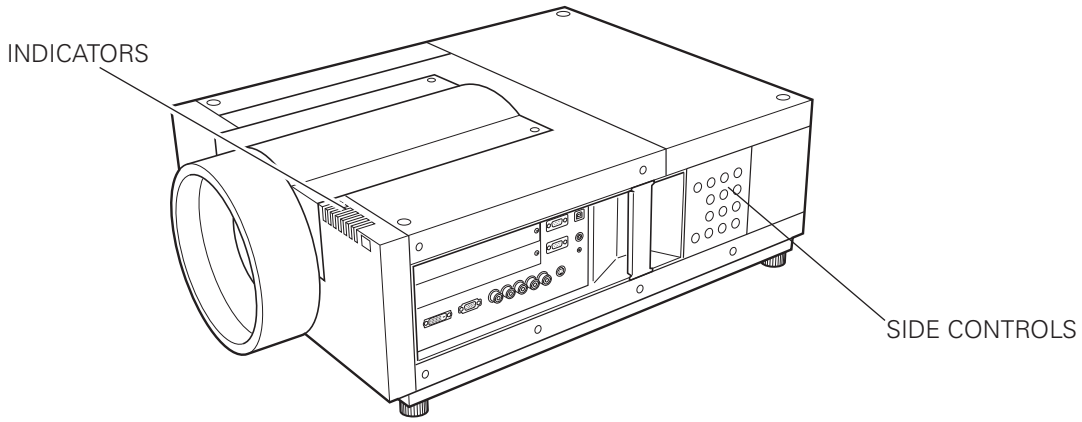

Side Control

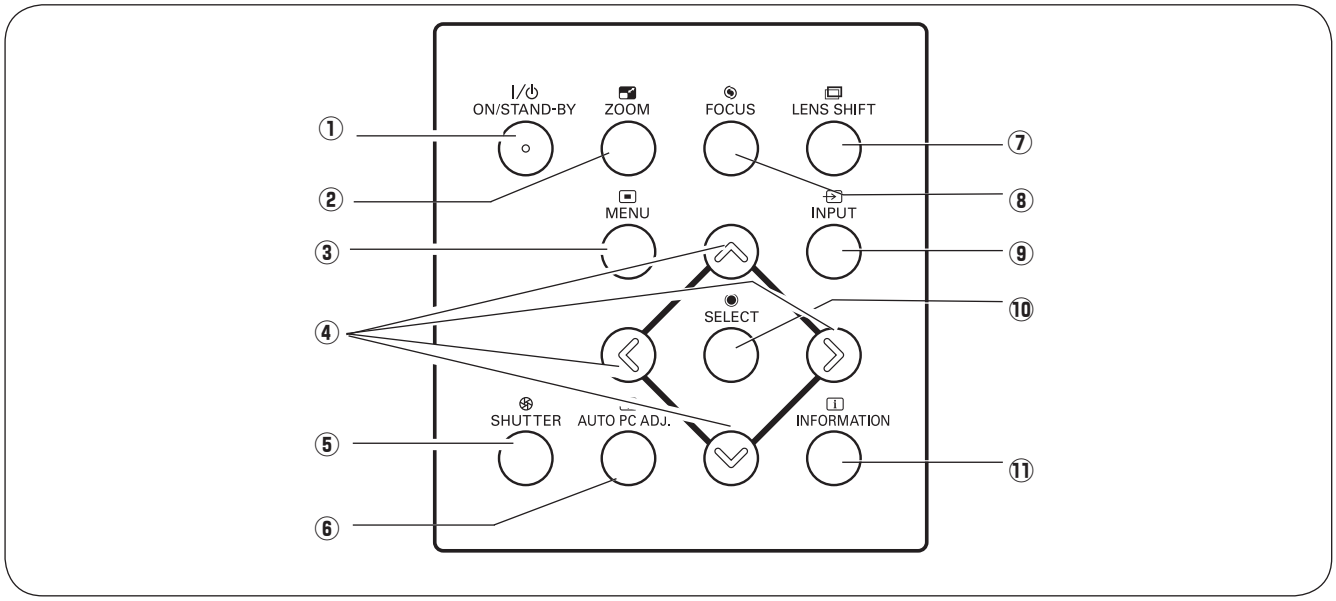

① **ON/STAND-BY button**
Turn the projector on or off. (pp.23,24)

② **ZOOM button**
Zoom in and out the images. (p.27)

③ **MENU button**
Open or close the On-Screen MENU. (pp.25, 26)

④ **POINT buttons**
- Select an item or adjust the value in the On-Screen MENU. (p.25)
- Pan the image in DIGITAL ZOOM + mode. (p.40)

⑤ **SHUTTER button**
Close and open up the built-in shutter. (p.27)

⑥ **AUTO PC ADJ. button**
Automatically adjust the computer image to its optimum setting. (pp.27, 35)

⑦ **LENS SHIFT button**
Select the LENS SHIFT function. (p.27)

⑧ **FOCUS button**
Adjust the focus. (p.27)

⑨ **INPUT button**
Select an input source INPUT 1, INPUT 2, Input 3 or Input 4. (pp.31-33)

⑩ **SELECT button**
Used to execute the selected item. (p.25) It is also used to expand image in DIGITAL ZOOM mode. (p.40)

⑪ **INFORMATION button**
Display the input source information (p.28).

Indicators

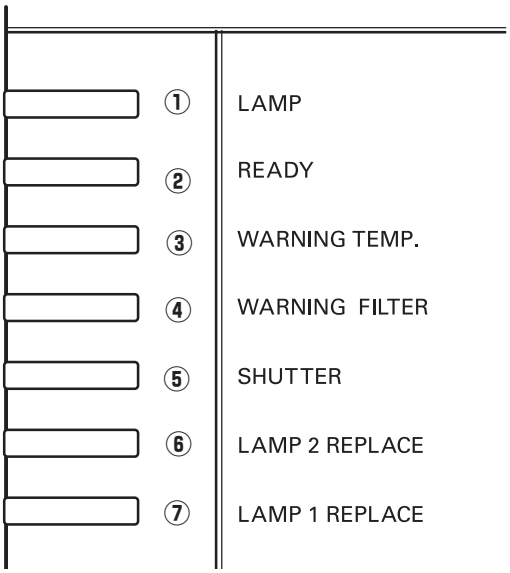

① **LAMP Indicator**
This indicator is dim when the projector is turned on. And bright when the projector is in stand-by mode. (pp.72-74)

② **READY indicator**
This indicator lights green when the projector is ready to be turned on. And it flashes green in Power Management mode. (pp.52, 72-74)

③ **WARNING TEMP. indicator**
This indicator flashes red when internal projector temperature is too high. (pp.65, 72-74)

④ **WARNING FILTER indicator**
–Blink slow when the filter is being scrolled (pp. 57, 72).
–Blink fast when the filter scroll is not working properly or the filter cartridge is not installed (pp.57, 74).
–Light orange when the clogging of the filter is detected or the filter counter reaches a time set in the timer setting, urging immediate filter/ filter cartridge replacement (pp.56, 57, 74).

⑤ **SHUTTER indicator**
Light blue when the shutter is closed. (p72)

⑥ **LAMP 2 REPLACE indicator**
Turn orange when the life of the projection lamp2 draws to an end. (pp.61, 73)

⑦ **LAMP 1 REPLACE indicator**
Turn orange when the life of the projection lamp1 draws to an end. (pp.61, 73)

Remote Control

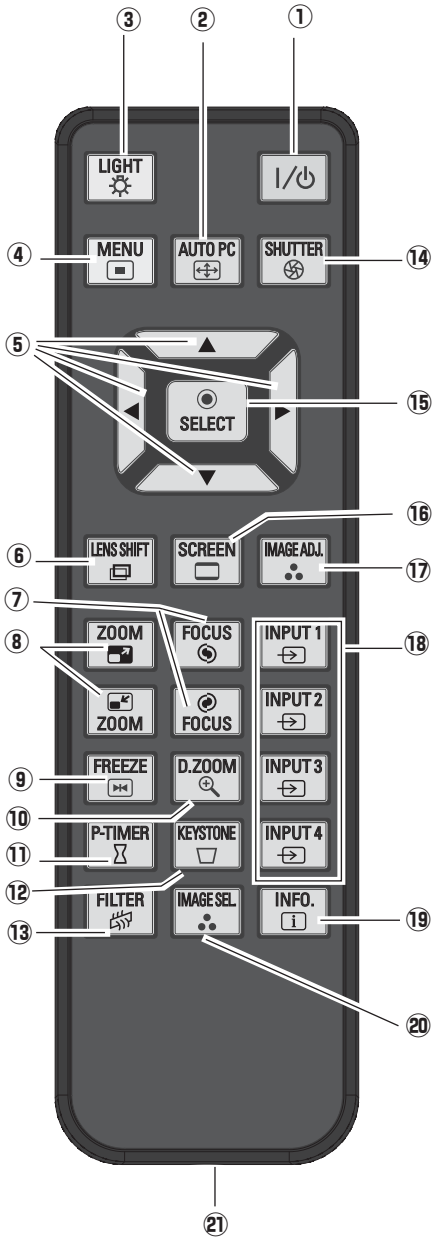

✔***Note:***

To ensure safe operation, observe the following precautions:

- Do not bend, drop, or expose the remote control to moisture or heat.
- For cleaning, use a soft dry cloth. Do not apply benzene, thinner, spray, or any other chemical materials.

① **ON/STAND-BY button**
Turn the projector on or off. (pp.23-24)

② **AUTO PC button**
Automatically adjust the computer image to its optimum setting (pp.29, 35).

③ **LIGHT button**
Light the buttons on the remote control for about 10 seconds.

④ **MENU button**
Open or close the On-Screen MENU. (pp.25-26)

⑤ **POINT ▲▼ ◀▶ buttons**
–Select an item or adjust the value in The ON-SCREEN MENU. (p.25)
–Pan the image in DIGITAL ZOOM +/– mode. (p.40)

⑥ **LENS SHIFT button**
Select the LENS SHIFT function. (p.29)

⑦ **FOCUS buttons**
Adjust the focus. (p.29)

⑧ **ZOOM buttons**
Zoom in and out the images. (p.29)

⑨ **FREEZE button**
Freeze the picture on the screen. (p.29)

⑩ **D.ZOOM button**
Select the Digital zoom +/- mode and resize the image. (pp.29, 40)

⑪ **P-TIMER button**
Operate the P-TIMER function. (p.30)

⑫ **KEYSTONE button**
Correct keystone distortion. (pp.30, 40, 44)

⑬ **FILTER button**
Scroll the filter. (p.30)

⑭ **SHUTTER button**
Close the built-in shutter for light blocking. (pp.27, 30)

⑮ **SELECT button**
–Execute the selected item. (p.25)
–Expand or compress the image in the DIGITAL ZOOM mode. (p.40)

⑯ **SCREEN button**
Select the screen size. (pp.39-40)

⑰ **IMAGE ADJ. button**
Enter the image level adjustment mode. (pp.30, 45-47)

⑱ **INPUT 1, 2, 3, 4 buttons**
Select an input source. (pp.31-33)

⑲ **INFO. button**
Display the input source information. (p.29)

⑳ **IMAGE SEL. button**
Select the image level. (pp.30, 38, 42)

㉑ **Wired Remote Jack**
Connect the remote control cable to this jack when using as a wired remote control.

Remote Control Battery Installation

1 Open the battery compartment lid.

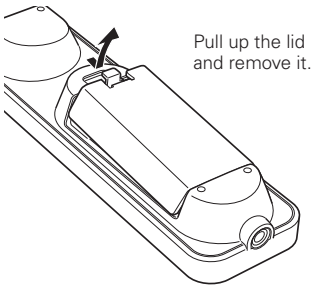

2 Install new batteries into the compartment.

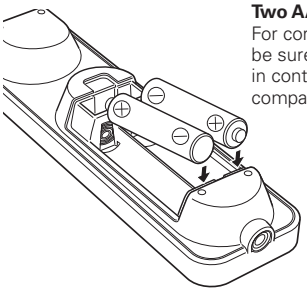

Two AA size batteries
For correct polarity (+ and –), be sure battery terminals are in contact with pins in the compartment.

3 Replace the compartment lid.

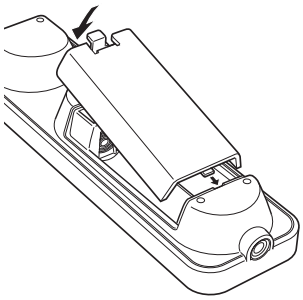

To ensure safe operation, please observe the following precautions :

- Use two (2) AA or LR6 type alkaline batteries.
- Always replace batteries in sets.
- Do not use a new battery with a used battery.
- Avoid contact with water or liquid.
- Do not expose the remote control to moisture or heat.
- Do not drop the remote control.
- If the battery has leaked on the remote control, carefully wipe the case clean and install new batteries.
- Risk of an explosion if battery is replaced by an incorrect type.
- Dispose of used batteries according to the instructions.

Remote Control Receivers and Operating Range

Point the remote control toward the projector (to Infrared Remote Receivers) when pressing the buttons. Maximum operating range for the remote control is about 16.4′ (5 m) and 60 degrees in front and rear of the projector.

Infrared Remote Receivers are provided both in front and back of the projector. You can conveniently use both of the receivers.(pp. 10, 52)

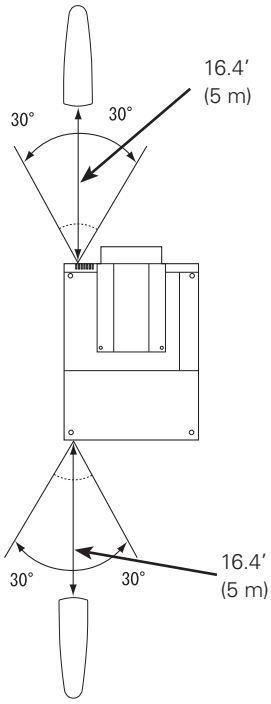

✔Note:

- When hanging the projector from the ceiling, select the Infrared Remote Receiver which is located farther away from the fluorescent light.(p.52)

Wired Remote Control

The remote control can be used as a wired remote control. Wired remote control helps you use the remote control outside of the operating range (16.4′/ 5 m). Connect the remote control and the projector with the remote control cable. Connected with the remote control cable, the remote control does not emit wireless signal.

Remote Control Code

The eight different remote control codes (Code 1–Code 8) are assigned to this projector. Switching the remote control codes prevents interference from other remote controls when several projectors or video equipment next to each other are operated at the same time. Change the remote control code for the projector first before changing that for the remote control. See “Remote control” in the Setting Menu on page 52.

1 Check the Reset Switch to "Use position" in the compartment lid on the back of the remote control.

2 While holding down the MENU button, press and release the IMAGE ADJ. button the number of corresponding times you would like to set the number of the remote control code for the projector.

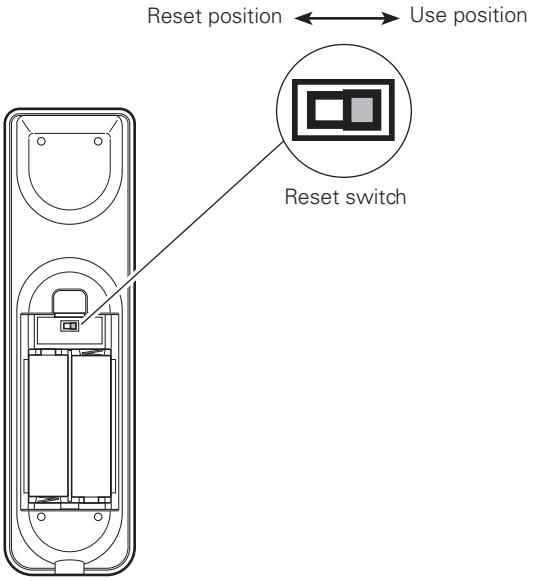

Remote Control Code	Number of Times Pressing IMAGE ADJ. button
Code 1	1
Code 2	2
Code 3	3
Code 4	4
Code 5	5
Code 6	6
Code 7	7
Code 8	8

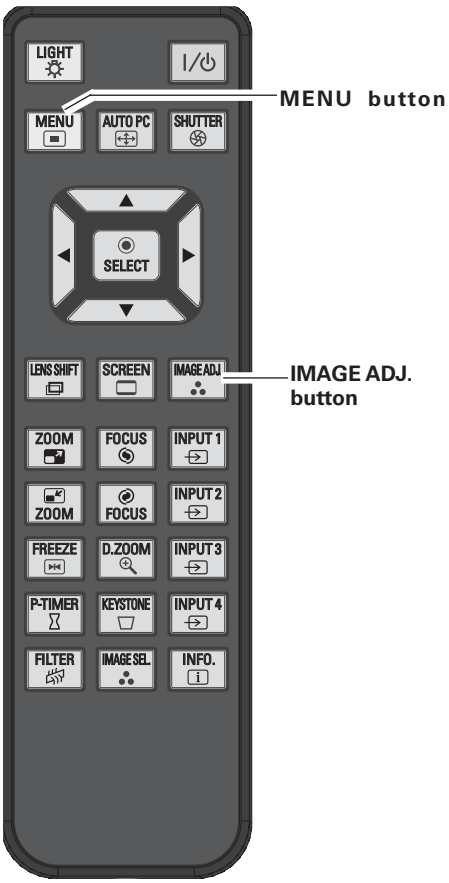

Lens Installation

Before setting up the projector, install Projection Lens on the projector.

Before installation, check where the projector is used and prepare a suitable lens. For the specifications of Projection Lens, contact sales dealer where you purchased the projector.

- Do not use the optional lens below for this projector. Otherwise damages may result.

LENS MODEL NO. : AH-21031, AH-21032

- Lens installation and replacement should be made by the qualified service personnel.

- When setting the projector after lens installation, be sure to replace a Lens Cap to protect a surface.

- When carrying or holding up the projector, be careful not to put your hands on lens part. It may damage lens, cabinet, or mechanical parts.

Positioning Projector

This projector is designed to project on a flat projection surface.

✔Note:

- Brightness in room has a great influence on picture quality. It is recommended to limit ambient lighting in order to provide the best image.

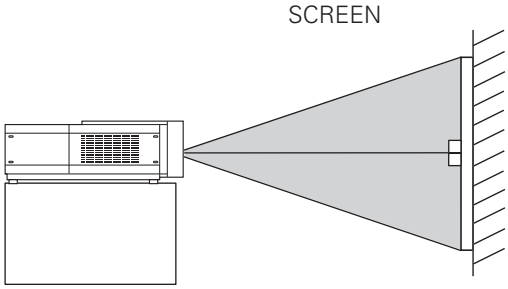

Lens Shift Adjustment

Projection lens can be moved from side to side and up and down with the motor-driven lens shift function. This function makes the positioning of images easy on the screen.(See page 27)

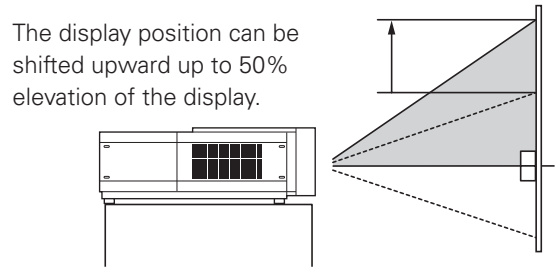

When the lens is shifted to top.

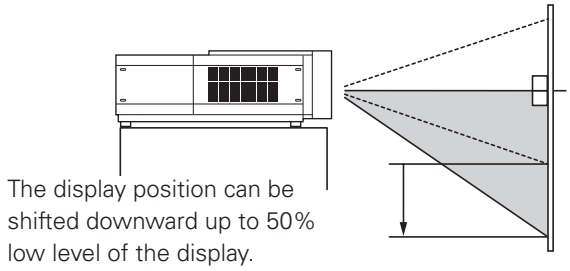

When the lens is shifted to bottom.

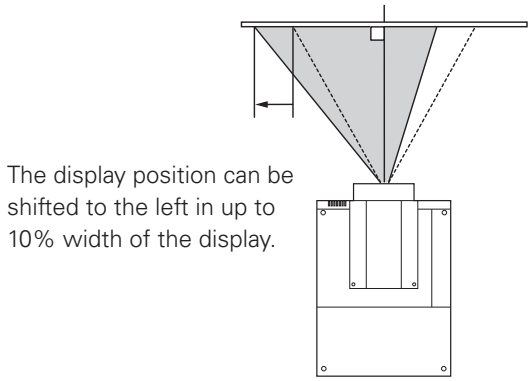

When the lens is shifted to leftmost.

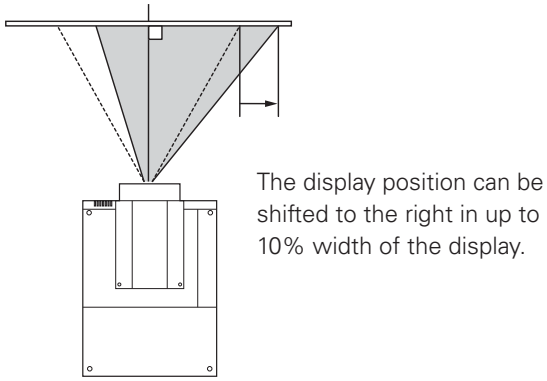

When the lens is shifted to rightmost.

Picture Level and Pitch Adjustment

The projection angle is adjustable up to 2.8 degrees upward and downward respectively by rotating front and back feet .

To raise the projector, rotate the feet clockwise.

To lower the projector or to retract the adjustable feet, rotate the feet counterclockwise.

To correct keystone distortion, press the KEYSTONE button on the remote control or select Keystone from the menu (see pages 14, 30, 40, 44).

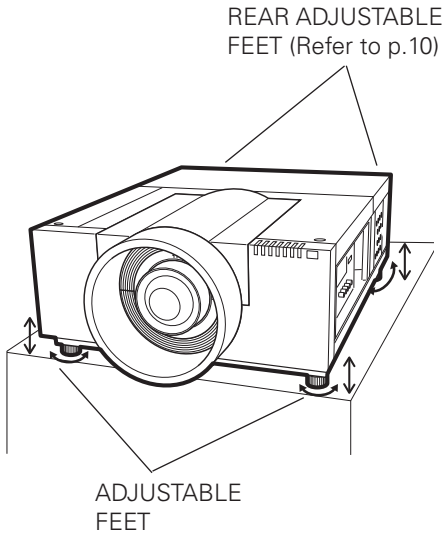

Do not rotate the adjustable feet when you see the red line on the adjustable feet. The adjustable feet may fall off.

Terminals of Projector

The projector has two replaceable Interface board slots. The projector's functions can be extended by installing the optional interface boards into the terminal slots. 2 vacant slots (Input 3 and 4) are provided in your purchasing the projector. For the Optional Interface Boards, contact sales dealer where you purchased the projector.

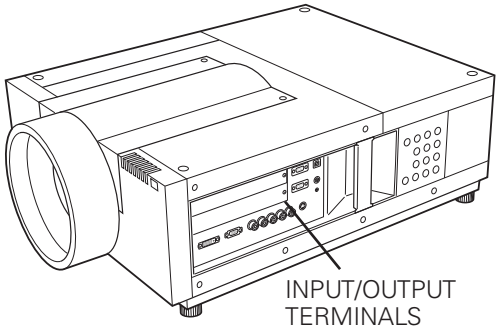

2 TERMINAL SLOTS (Factory set)

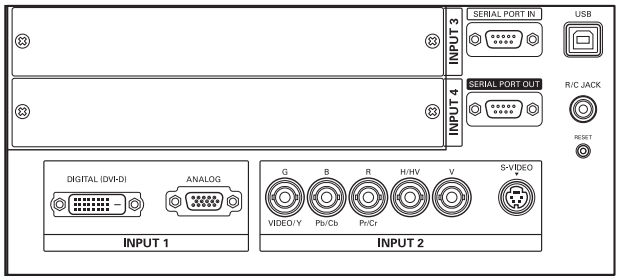

DVI / D-sub 15 Terminal 5-BNC / Video Terminal

Replacement of Terminal

✔***Note:***

- In the replacement of interface board, turn off the projector, press the Main On/Off Switch to Off and unplug the AC power cord from the AC outlet.

1 Remove 2 Screws from an interface board.

2 Pull out the interface board.

3 Replace the interface board. Insert a new interface board along Guide to fit Plug into Socket.

4 Tighten screws to secure the interface board.

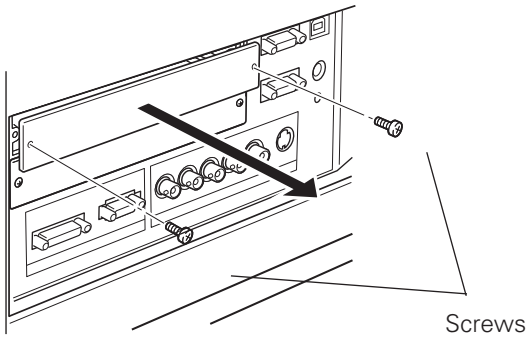

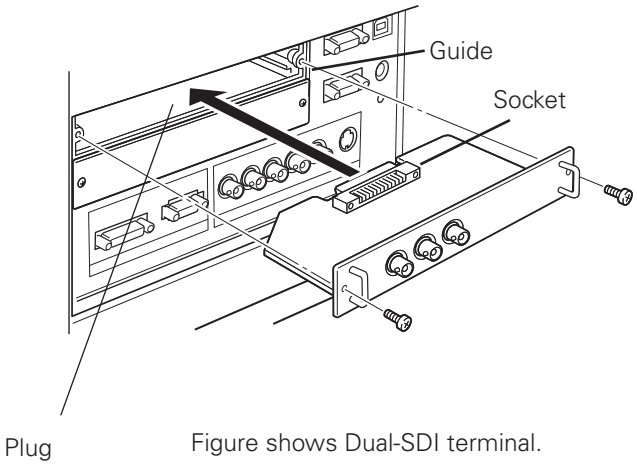

Figure shows Dual-SDI terminal.

NOTES ON ORDERING OR USING OPTIONAL INTERFACE BOARD

When ordering or using Optional Interface Board, contact your sales dealer. When contacting the sales dealer, tell the Option Control Number (Op.cont.No.) in the menu that is located on the bottom of the information menu.
(See page 28)

Connecting to Computer

Cables used for connection

- VGA Cable (D-sub 15 pin) *
- DVI Cable
- BNC Cable (BNC x 5)

(*One cable is supplied; Other cables are not supplied with this projector.)

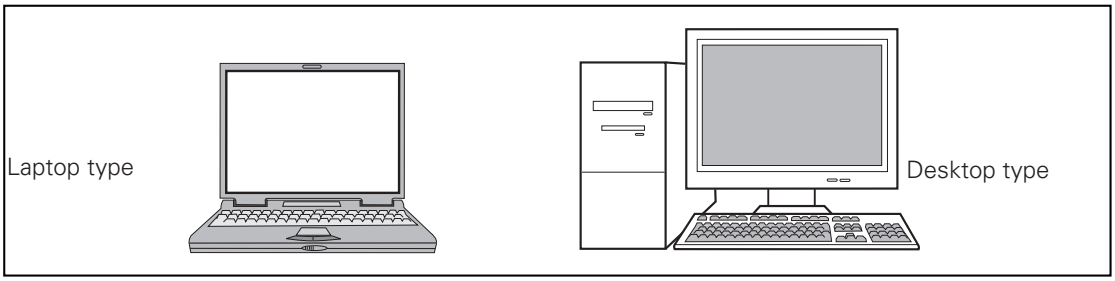

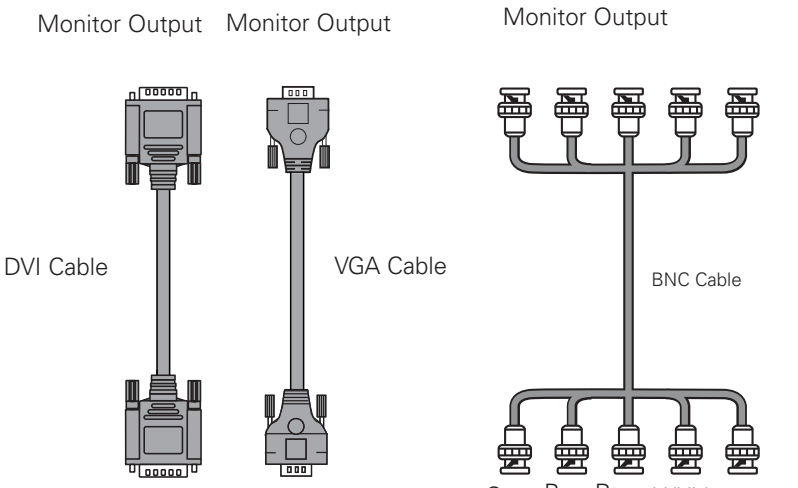

Terminals of the projector

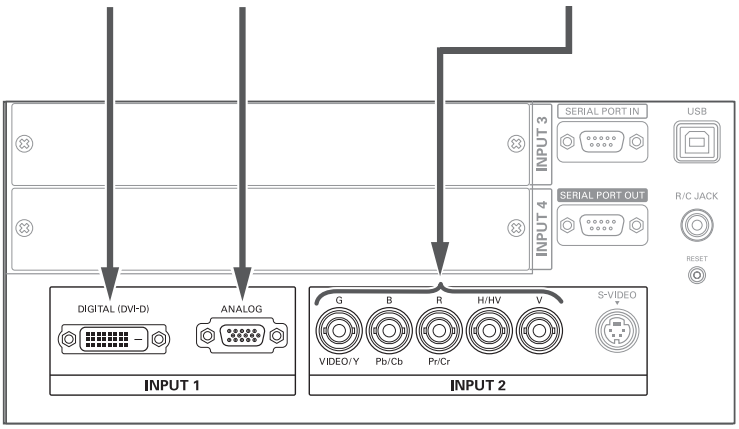

Unplug the power cords of both the projector and external equipment from the AC outlet before connecting cables.

Connecting to Video Equipment

Cables used for connection

- Video Cable (BNC x 3, BNC x 1)
- SCART-VGA Cable
- DVI Cable
- S-Video Cable

(Cables are not supplied with the projector.)

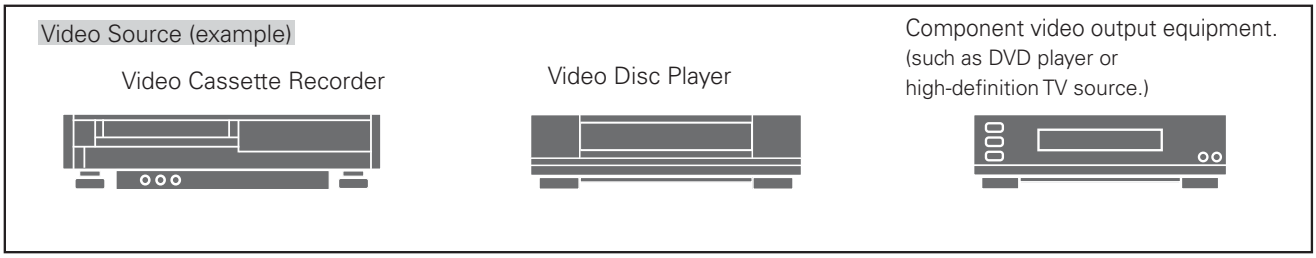

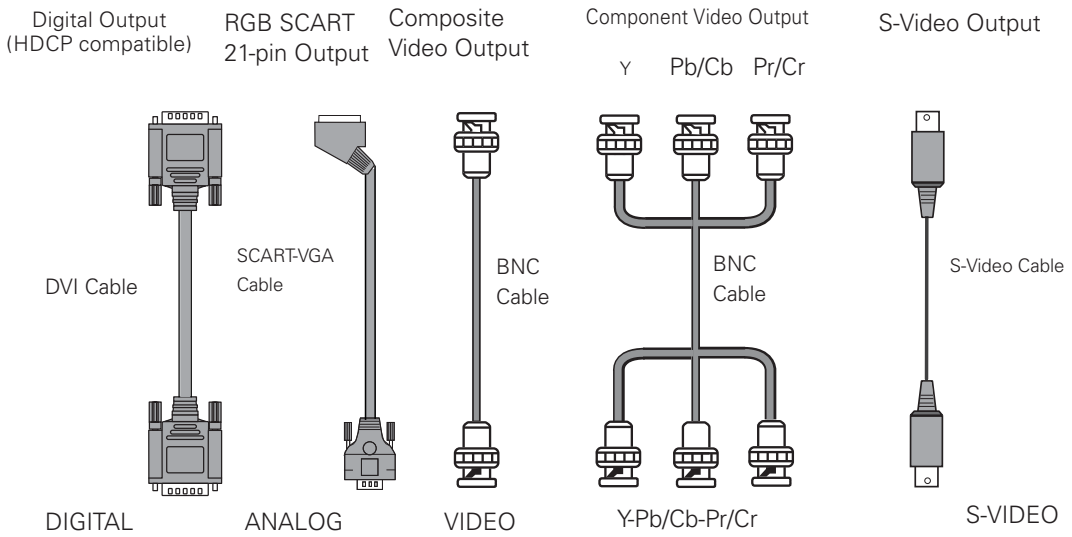

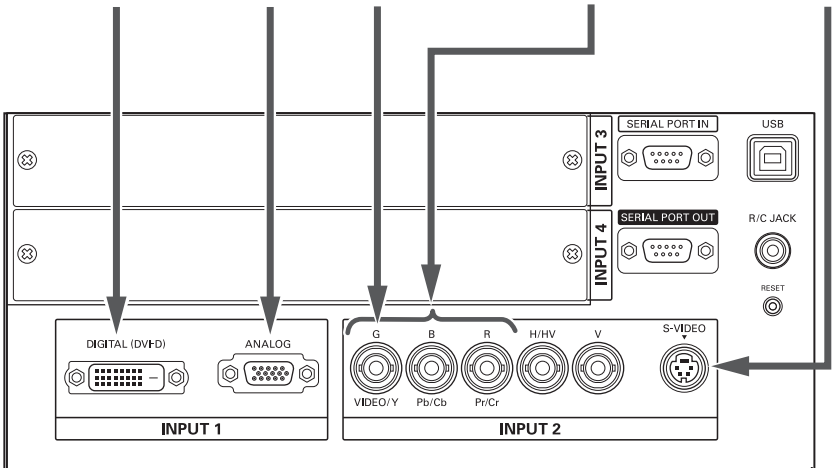

Unplug the power cords of both the projector and external equipment from the AC outlet before connecting cables.

Connecting the AC Power Cord

This projector uses nominal input voltages of 100-120 or 200–240 V AC. It is designed to work with single-phase power systems having a grounded neutral conductor. To reduce the risk of electrical shock, do not plug into any other type of power system. If you are not sure of the type of power being supplied, consult your authorized dealer or service station.
Connect the projector with all peripheral equipment before turning on the projector.

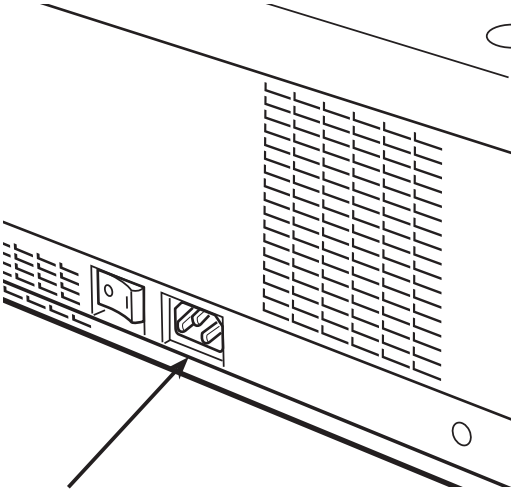

Connect the AC power cord (supplied) to the projector.

CAUTION

The AC outlet must be near this equipment and must be easily accessible.

✔ ***Note:***

- Unplug the AC power cord or turn off the MAIN ON/OFF Switch when the projector is not in use. When the projector is in stand-by mode, it consumes a little electric power.

NOTE ON THE POWER CORD

AC power cord must meet the requirements of the country where you use the projector.
Confirm the AC plug type with the chart below and proper AC power cord must be used.
If the supplied AC power cord does not match your AC outlet, contact your sales dealer.

Projector side	AC Outlet side		
	For the U.S.A. and Canada	**For Continental Europe**	**For the U.K.**
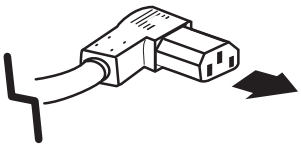 To POWER CORD CONNECTOR on your projector.	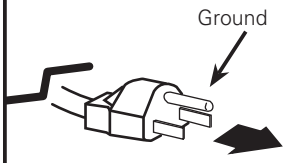 To the AC Outlet. **(120 V AC)**	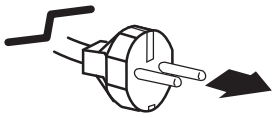 To the AC Outlet. **(200–240 V AC)**	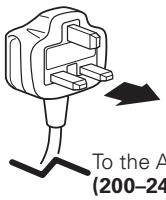 To the AC Outlet. **(200–240 V AC)**

Turning On the Projector

1 Complete peripheral connections (with a computer, VCR, etc.) before turning on the projector.

2 Connect the projector's AC power cord into an AC outlet and turn on the MAIN ON/OFF Switch. The LAMP indicator lights red and the READY indicator lights green.

3 Press the ON/STAND-BY button on the side control or on the remote control. The LAMP indicator dims red and the cooling fans start to operate. The preparation display appears on the screen and the countdown starts.

4 After the countdown, the input source that was selected the last time and the Lamp mode icon (see page 60) appear on the screen.

If the projector is locked with a PIN code, PIN code Input Dialog Box will appear. Enter the PIN code as instructed below.

The preparation display will disappear after 20 seconds.

Selected Input Source and Lamp control

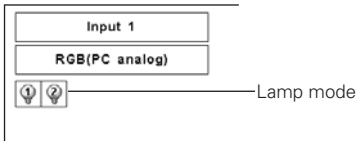

See page 60 for the Lamp mode status

✔***Note:***
- The Lamp replacement icon and the Filter warning icon may appear on the screen depending on the usage state of the projector.

Enter a PIN code

Use the Point ▲▼ buttons on the side control or on the remote control to enter a number. Press the Point ▶ button to fix the number and move the red frame pointer to the next box. The number changes to "✳." Repeat this step to complete entering a four-digit number. After entering the four-digit number, move the pointer to "Set." Press the SELECT button so that you can start to operate the projector.

If you fixed an incorrect number, use the Point ◀ button to move the pointer to the number you want to correct, and then enter the correct number.

If you entered an incorrect PIN code, "PIN code" and the number (✳✳✳✳) will turn red for a moment. Enter the correct PIN code all over again.

PIN code Input Dialog Box

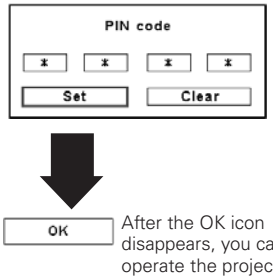

✔***Note:***
- When the Logo select function is set to "Off," the logo will not be shown on the screen (p.49).
- When the "Countdown off" or "Off" is selected in the Display function, the countdown will not be shown on the screen (p.48).
- During the countdown period, all operations are invalid.
- If the PIN code number is not entered within three minutes after the PIN code dialog box appeared, the projector will be turned off automatically.
- The "1234" is set as the initial PIN code at the factory.

What is PIN code?

PIN (Personal Identification Number) code is a security code that allows the person who knows it to operate the projector. Setting a PIN code prevents unauthorized use of the projector.

A PIN code consists of a four-digit number. Refer to the PIN code lock function in the Setting Menu on page 53-54 for locking operation of the projector with your PIN code.

CAUTION ON HANDLING PIN CODE

If you forget your PIN code, the projector can no longer be started. Take special care in setting a new PIN code; write down the number in a column on page 80 of this manual and keep it on hand. Should the PIN code be missing or forgotten, consult your dealer or service center.

Turning Off the Projector

1 Press the ON/STAND-BY button on the side control or on the remote control, and "Power off?" appears on the screen.

2 Press the ON/STAND-BY button on the side control or on the remote control again to turn off the projector. The LAMP indicator lights bright and the READY indicator turns off. After the projector is turned off, the cooling fans operate. You cannot turn on the projector during this cooling down period.

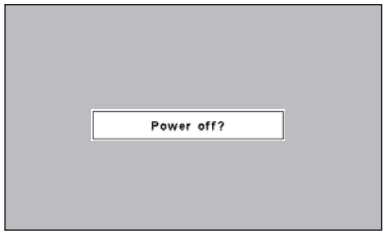

"Power off?" disappears after 4 seconds.

3 When the projector has cooled down enough, the READY indicator lights green and then you can turn on the projector. To turn off the MAIN ON/OFF Switch, wait until the projector is completely cooled down.

4 Unplug the AC power cord from the AC outlet.

⚠ TO MAINTAIN THE LIFE OF THE LAMP, ONCE YOU TURN THE PROJECTOR ON, WAIT AT LEAST FIVE MINUTES BEFORE TURNING IT OFF.
DO NOT UNPLUG THE AC POWER CORD WHILE COOLING FANS ARE RUNNING OR BEFORE THE READY INDICATOR LIGHTS GREEN AGAIN. OTHERWISE IT WILL RESULT IN SHORTENING OF THE LAMP LIFE.

⚠ DO NOT OPERATE THE PROJECTOR CONTINUOUSLY WITHOUT REST. CONTINUOUS USE MAY RESULT IN SHORTENING THE LAMP LIFE. TURN OFF THE PROJECTOR AND LET STAND FOR ABOUT AN HOUR IN EVERY 24 HOURS.

✔ ***Note:***

- When the On start function is set to "On," the projector will be turned on automatically by connecting the AC power cord to an AC outlet (p.53).
- The running speed of cooling fans is changed according to the temperature inside the projector.
- Do not put the projector in a case before the projector is cooled enough.
- If the WARNING TEMP. indicator blinks red, see "Warning Indicators" on page 65.
- The projector cannot be turned on during the cooling period with the READY indicator turned off. You can turn it on again after the READY indicator becomes green again.

How to Operate the On-Screen Menu

The projector can be adjusted or set via the On-Screen Menu. For each adjustment and setting procedure, refer to the respective sections in this manual.

1 Press the MENU button on the side control or the remote control to display the On-Screen Menu.

2 Use the Point ◀▶ buttons to select a Menu icon. Use the Point ▲▼ buttons to select an item in the selected menu.

3 Press the SELECT button to show the item data. Use the Point ◀▶ buttons to adjust the values.

To close the On-Screen Menu, press the MENU button again.

✔***Note:***
- The selected item is not active until the SELECT button is pressed.

Side Control

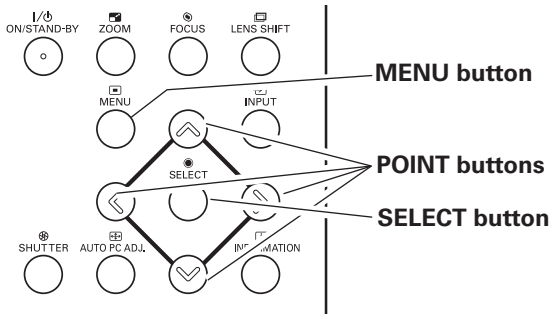

Remote Control

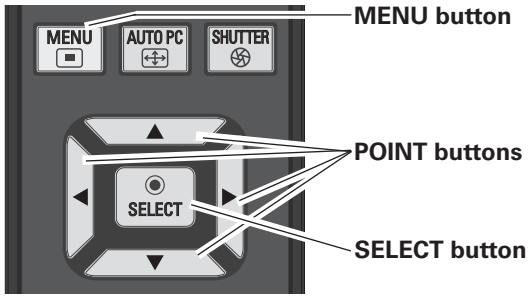

On-Screen Menu

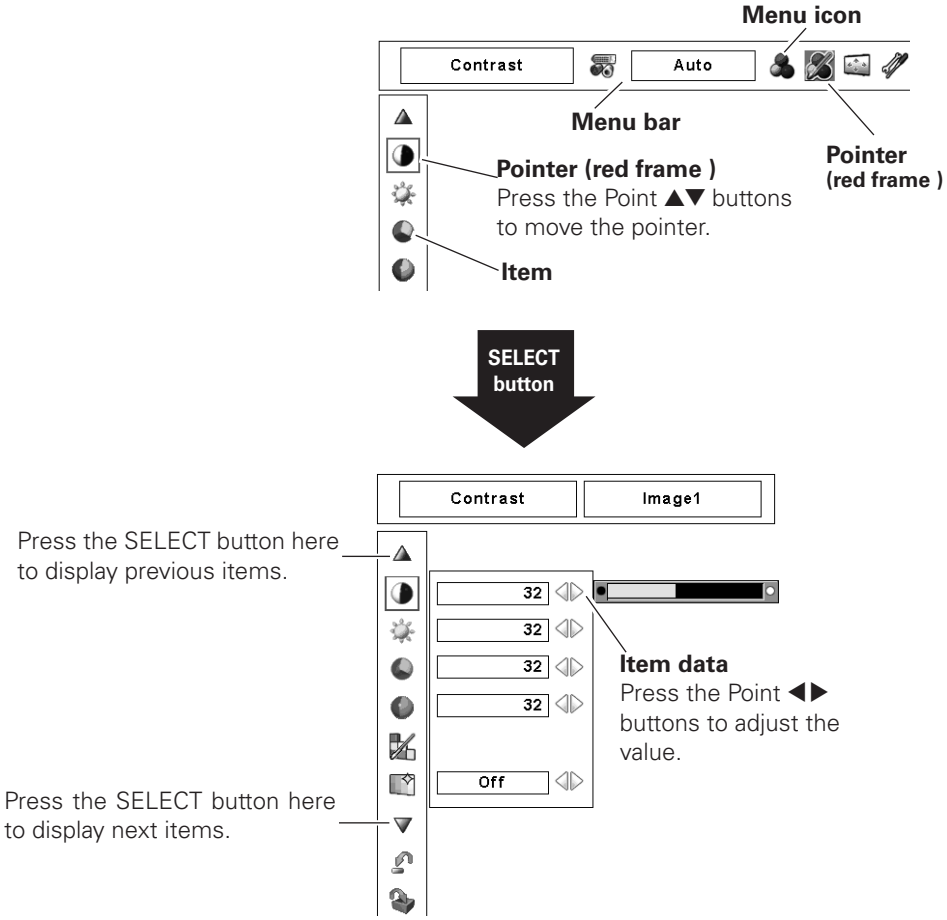

Menu Bar

For detailed functions of each menu, see "Menu Tree" on pages 69-71.

For Computer Source

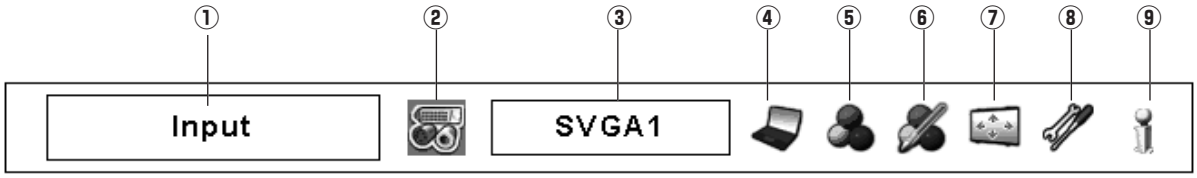

① Guide Window

Show the selected Menu of the On-Screen Menu.

② Input Menu

Used to select an input source Computer or Video (pp. 31-33).

③ PC System Menu

Used to select computer system (p. 34).

④ PC Adjust Menu

Used to adjust the parameters to match with the input signal format (pp. 35-37).

⑤ Image Select Menu

Used to select an image level among Standard, Real, and Image 1–10(p. 38).

⑥ Image Adjust Menu

Used to adjust the computer image. [Contrast/ Brightness/ Color management/Auto picture control/Color temp./White balance (R/G/B)/Offset (R/G/B)/Sharpness/ Gamma/Reset/ Store] (pp. 45-47).

⑦ Screen Menu

Used to adjust the size of the image. [Normal/True/Wide/ Full screen/Custom/Keystone/Ceiling/Rear/Reset/Digital zoom +/–] (pp.39-40).

⑧ Setting Menu

Used to set the projector's operating configurations (pp. 48-56).

⑨ Information Menu

Display the input source information(p. 28).

For Video Source

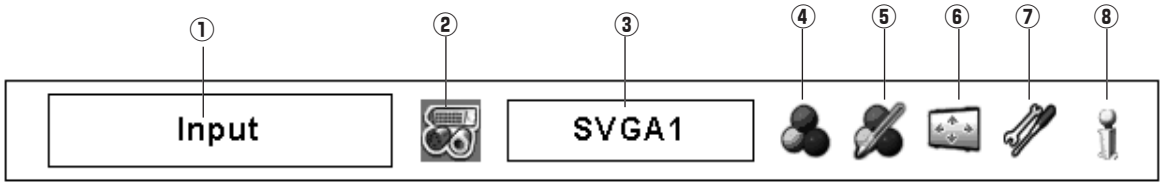

① Guide Window

Show the selected Menu of the On-Screen Menu.

② Input Menu

Used to select an input source Computer or Video (pp. 31-33).

③ AV System Menu

Used to select the system of selected video source (p. 41).

④ Image Select Menu

Used to select an image level among Standard, Cinema, and Image 1–10 (p. 42).

⑤ Image Adjust Menu

Used to adjust the picture image. [Contrast/Brightness/ Color/Tint/Color management/ Auto picture control/Color temp./White balance (R/G/B)/ Offset (R/G/B)/Sharpness/ Gamma/Noise reduction/Progressive/Reset/Store] (pp. 45-47)

⑥ Screen Menu

Used to adjust the size of the image. [Normal/Wide/ Custom/Keystone/Ceiling/Rear/Reset] (pp. 43-44).

⑦ Setting Menu

Used to set the projector's operating configurations (pp. 48-56).

⑧ Information Menu

Display the input source information(p. 28).

Operating with Projector Control

Zoom Adjustment

Press the ZOOM button and "Zoom" will be displayed on the screen. And then press the point ▲▼ buttons to zoom in and out the image.

Focus Adjustment

Press the FOCUS button and "Focus" will be displayed on the screen. And then press the point ▲▼ buttons to adjust the focus of the image.

Lens Shift Adjustment

Press the LENS SHIFT button and "Lens shift" will be displayed on the screen. Use the Point ▲▼◀▶ buttons to position the screen to the desired point without having picture distortion.
The screen can be moved up or down to 50 percent, or sideways up to 10 percent from the central axis of the lens shift.

Auto PC Adjustment

Operate the Auto PC Adj. function. The computer screen adjustment can be done easily by pressing this button. See page 35 for details.

Side Control

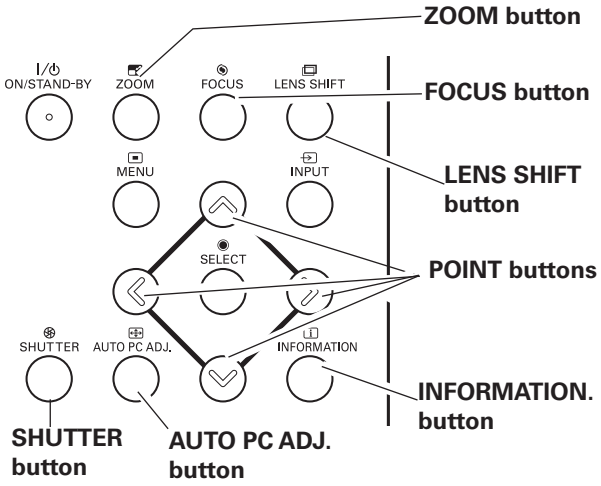

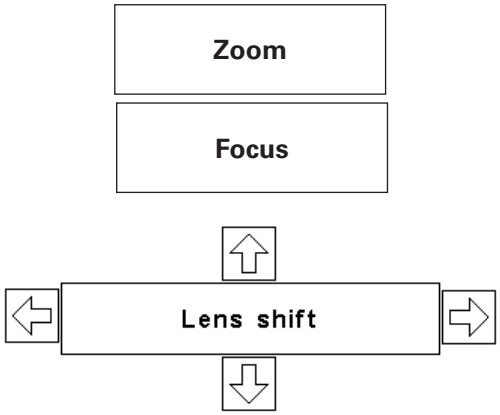

✔***Note:***
- The arrow disappears at the maximum lens shift in each direction.
- The arrow turns red when the lens shift comes to the center position of the screen.

Shutter Function

Shutter function allows you to completely block out light to the screen. Press the SHUTTER button to close the shutter inside the projector. To open up the shutter, press the SHUTTER button again. Refer to p.55 for detail of setting for the Shutter function.

✔***Note:***
- The SHUTTER button on the side control and the remote control cannot be effective when Shutter Protection is "On" in the Setting menu. (p.55)
- The SHUTTER indicator on the projector's top lights blue when the shutter is closed. (pp.13, 72)
- The projector will shut down automatically when the set time on Shutter management has passed. (p55)
- The Power management function does not work when the shutter is closed.(p.52)

Information

Information display can be used to confirm the current operating condition of the projector and the signal being projected through the projector.

Press the INFORMATION button to display the information window on the screen. To hide the information window, press the INFORMATION button again or Point ◀▶ buttons.

The information window can also be selected from the menu.

Information Menu

Information Menu

Input	Input 1	
	RGB(PC analog)	
H-sync freq.	0.0 KHz	
V-sync freq.	0.0 Hz	
Screen	Normal	
Language	English	
Lamp mode		
Lamp control		
Power management	Ready	5 Min
Shutter management	Remote control	On
	Projector	Off
	180 Min	
Security	Keylock	
	PIN code lock	Off
Remote control	Code 1	
Option control No. 10		

* The H- and V-sync freq. values described in this figure may be different from the actual values.

Operating with Remote Control

Using the remote control for some frequently used operations is advisable. Just pressing one of the buttons enables you to make the desired operation quickly without calling up the On-Screen Menu.

AUTO PC button

Press the AUTO PC button on the remote control to operate the Auto PC Adj. function. The computer screen adjustment can be done easily by pressing this button. See page 35 for details.

LENS SHIFT button

See page 27 for details.

ZOOM buttons

Press the ZOOM buttons on the remote control to zoom in and out the image. See page 27 for details.

FOCUS buttons

Press the FOCUS buttons on the remote control to adjust focus of the image. See page 27 for details.

FREEZE button

Press the FREEZE button on the remote control to freeze the picture on the screen. To cancel the FREEZE function, press the FREEZE button again or press any other button.

SCREEN button

Press the SCREEN button on the remote control to select the desired screen size. The selected screen size mode appears on the screen for 4 seconds. See pages 39 to 40 and 43 to 44 for details.
Press and hold the SCREEN button for more than 5 seconds to return all the screen size adjustment setting to the factory default setting.

D.ZOOM button

Press the D.ZOOM button on the remote control to enter to the Digital zoom +/– mode. See page 40 for details.

INFO. button

Press the INFO. button on the remote control to display the information window on the screen.

See the previous page for details.

Remote Control

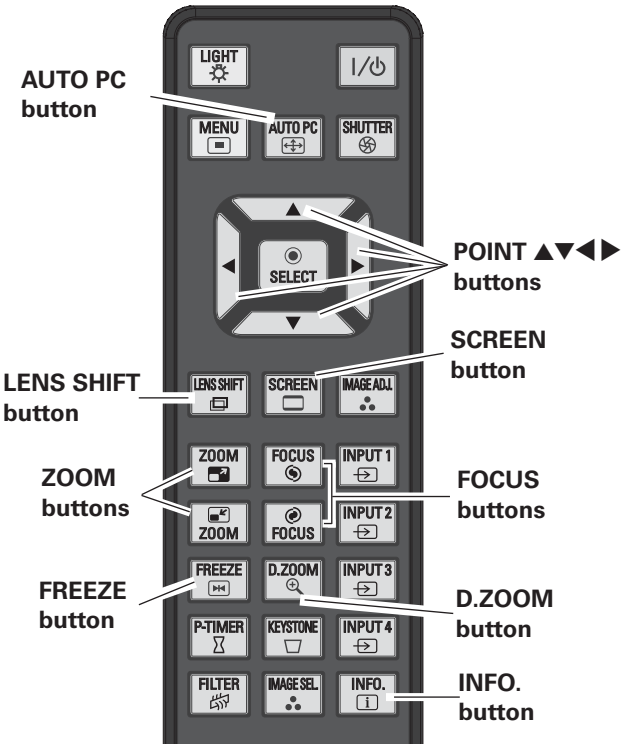

✔***Note:***
- See the next page for the description of other buttons.

SHUTTER button

See page 27 for details.

FILTER button

Press and hold the FILTER button for more than five seconds to replace the filter mechanically. See page 51 for details.

✔***Note:***
- The filter cannot be rewound.
- When the filter is replaced, the total accumulated time of the filter use is automatically set to 0.

IMAGE ADJ. button

Press the IMAGE ADJ. button on the remote control to adjust a image level of the screen.
For more detail, see pp.45-47.

IMAGE SEL. button

Press the IMAGE SEL. button on the remote control to select a desired image level of the screen.
For more detail, see pp.38, 42.

P-TIMER button

Press the P-TIMER button on the remote control. The Timer display "00 : 00" appears on the screen and starts to count time (00 : 00–59 : 59).
To stop the P-TIMER, press the P-TIMER button.
To cancel the P-TIMER, press the P-TIMER button again.

KEYSTONE button

Press the KEYSTONE button on the remote control. The "Keystone" appears on the screen.

Use the Point ▲▼◀▶ buttons to correct keystone distortion. The keystone adjustment can be stored (pp.40, 44).

Remote Control

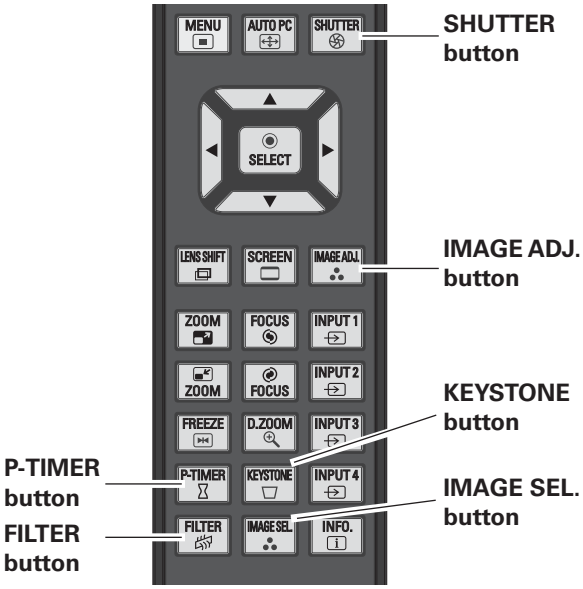

✔***Note:***
- See the previous page for the description of other buttons.

P-Timer display

- The white arrows indicate that there is no correction.
- A red arrow indicates the direction of correction.
- An arrow disappears at the maximum correction.
- If you press the KEYSTONE button on the remote control again while the Keystone dialog box is being displayed, the keystone adjustment will be canceled.
- The adjustable range can be limited depending on the input signal.
- "Keystone" disappears after 10 seconds.

Reduce the upper width with Point ▲ button.

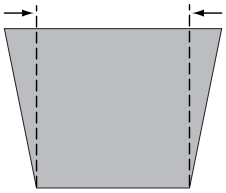

Reduce the lower width with Point ▼ button.

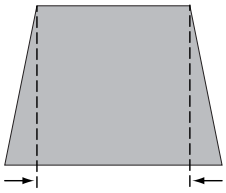

Reduce the left part with Point ◀ button.

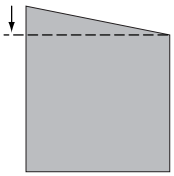

Reduce the right part with Point ▶ button.

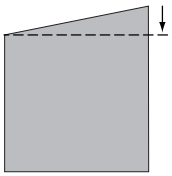

Input

Side Control

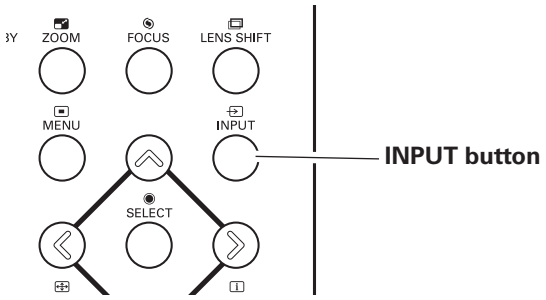

Side Control Operation

Press the INPUT button on the side control. It switches to INPUT 1, INPUT 2, INPUT 3 and INPUT 4 as you press the INPUT button.

Before using the INPUT button on the side control, you must select a correct input source by On-Screen Menu and the latest input source will be displayed.

Side Control button operation

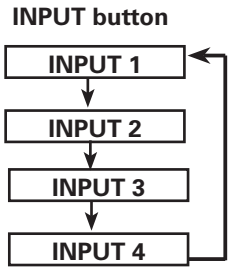

Remote Control

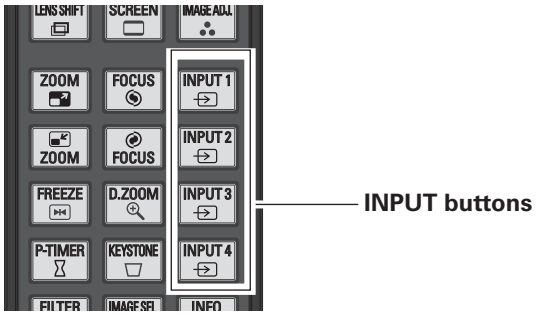

Remote Control Operation

Press the INPUT 1, INPUT 2, INPUT 3 or INPUT 4 button on the remote control. It switches to INPUT 1, INPUT 2, INPUT 3 or INPUT 4 as you press the INPUT button.

Before using the INPUT button on the remote control, you must select a correct input source by On-Screen Menu and the latest input source will be displayed.

Remote Control button operation

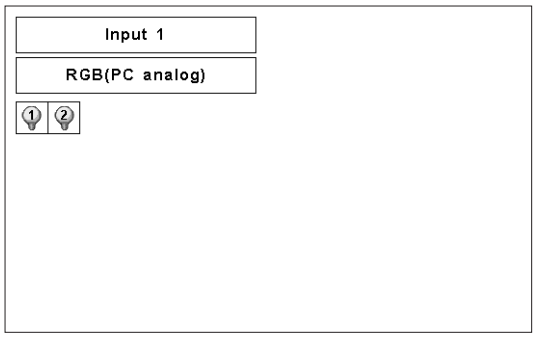

✔***Note:***
- Empty slots cannot be selected.
- When a slot is empty, the input is displayed in grayout.

Computer Input Source Selection

Menu Operation

When Selecting the INPUT 1 with DVI/D-sub 15 terminals

1 Press the MENU button to display the On-Screen Menu. Use the Point ◀▶ buttons to move the red frame pointer to the INPUT Menu icon.

2 Use the Point ▲▼ buttons to move the red arrow pointer to the desired input and then press the SELECT button. Then you can switch to the desired input.

3 Press the select button again. The Source Select Menu appears.

4 Use the Point ▲▼ buttons to select the desired source and then press the SELECT button.

INPUT MENU

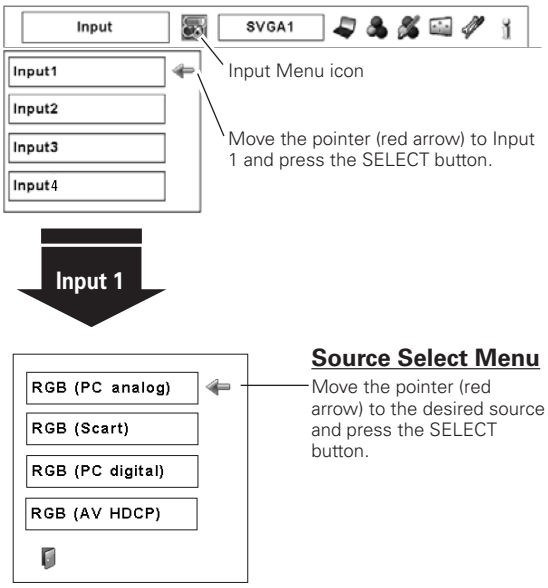

RGB (PC analog)

When your computer is connected to the INPUT 1 (ANALOG) terminal, select RGB (PC analog).

RGB (PC digital)

When your computer is connected to INPUT 1 (DIGITAL) terminal, select RGB (PC digital).

When Selecting the INPUT 2 with 5-BNC/Video/S-Video terminals

INPUT MENU

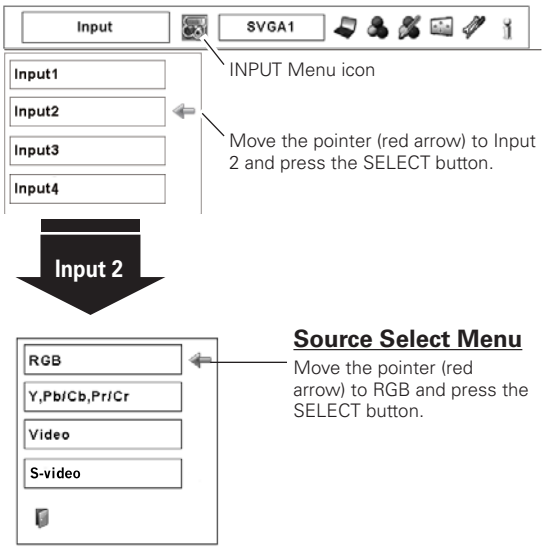

RGB

When your computer is connected to the INPUT 2 (5 BNC INPUT JACKS) terminal, select RGB.

✔***Note:***

•When a slot is empty, the input is displayed in grayout.

Video Input Source Selection

Menu Operation

When Selecting the INPUT 1 with DVI/D-sub 15 terminals

When connecting to video equipment, select the type of Video source in the Source Select Menu.

RGB (Scart)

When scart video equipment is connected to the INPUT 1 (ANALOG) terminal, select RGB (Scart).

RGB (AV HDCP)

If the HDCP-compatible signal source is connected to the INPUT 1 (DIGITAL) terminal, select RGB (AV HDCP).

INPUT MENU

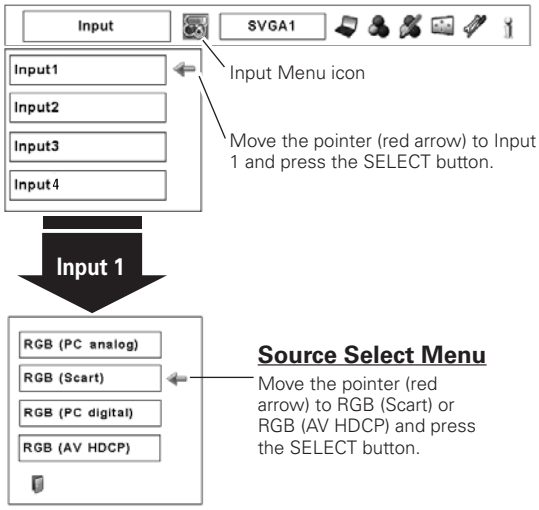

When Selecting the INPUT 2 with 5-BNC/Video/S-Video terminals

When connecting to video equipment, select the type of Video source in the Source Select Menu.

Y, Pb/Cb, Pr/Cr

When the video input signal is connected to the Y-Pb/Cb-Pr/Cr jacks, select Y, Pb/Cb, Pr/Cr.

Video

When the video input signal is connected to the VIDEO jack, select Video.

S-Video

When the video input signal is connected to the S-VIDEO jack, select S-Video.

INPUT MENU

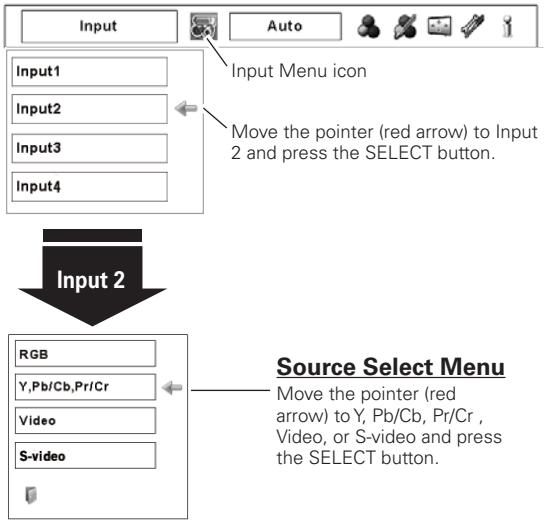

✔***Note:***

- HDCP (High-bandwidth Digital Content Protection) is a system for protecting digital entertainment content which is delivered by DVI (Digital Visual Interface) from being copied. The specification of HDCP is decided and controlled by Digital Content Protection, LLC. Should the specification be changed, this projector may not display the digital content protected by HDCP.
- When a slot is empty, the input is displayed in grayout.

Computer System Selection

Automatic Multi-Scan System

This projector automatically tunes to various types of computers based on VGA, SVGA, XGA, SXGA, SXGA+, WXGA, UXGA, or WUXGA (refer to "Compatible Computer Specifications" on pages 75-76). If a computer is selected as a signal source, this projector automatically detects the signal format and tunes to project a proper image without any additional settings. (Some computers need to be set manually.)

One of the following messages may appear when:

Auto The projector cannot recognize the connected signal conforming to the provided PC Systems. The "Auto" is displayed on the PC System Menu icon and the Auto PC Adjustment function works to display proper images. If the image is not projected properly, a manual adjustment is required. (pp. 36–37.)

----- There is no signal input from the computer. Check the connection between your computer and the projector. (See "Troubleshooting" on page 66.)

Mode 1 The preset system is manually adjusted in the PC Adjust Menu. The adjusted data can be stored in the Mode 1–10. (pp. 36-37)

SVGA 1 PC systems provided in this projector is chosen. The projector chooses a proper system provided in the projector and displays it.

✻ Mode 1 and SVGA 1 are examples.

PC SYSTEM MENU

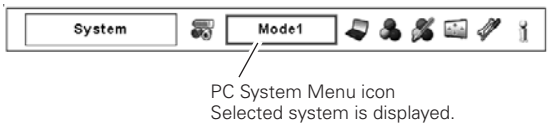

Selecting Computer System Manually

PC system can also be selected manually.

1 Press the MENU button to display the On-Screen Menu. Use the Point ◀▶ buttons to move the red frame pointer to the PC System Menu icon.

2 Use the Point ▲▼ buttons to move the red arrow pointer to the desired system, and then press SELECT button.

PC SYSTEM MENU

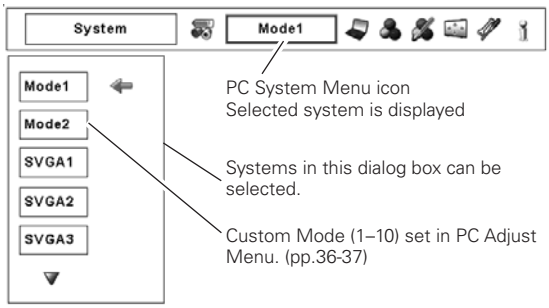

Auto PC Adjustment

Auto PC Adjustment function is provided to automatically adjust Fine sync, Total dots, Horizontal and Vertical positions to conform to your computer.

Direct Operation

The Auto PC adjustment function can be operated directly by pressing the AUTO PC button on the remote control or the AUTO PC ADJ. button on the side control.

Remote Control

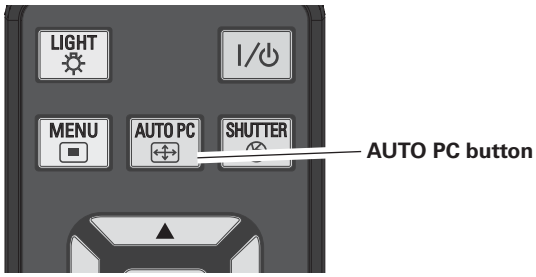

Side Control

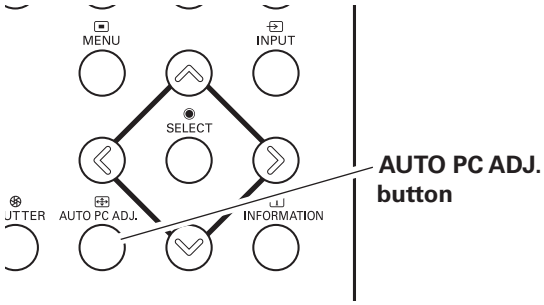

Menu Operation

Auto PC adj.

1 Press the MENU button to display the On-Screen Menu. Use the Point ◀▶ buttons to move the red frame pointer to the PC Adjust Menu icon.

2 Use the Point ▲▼ buttons to move the red frame pointer to the AUTO PC adj. icon and then press the SELECT button twice.

PC ADJUST MENU

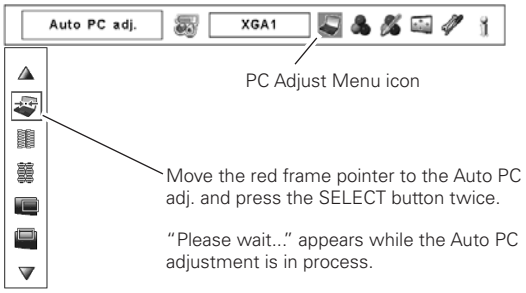

To store the adjusted parameters.
The adjusted parameters from the Auto PC Adjustment can be stored in the projector. Once the parameters are stored, the setting can be done just by selecting Mode in PC SYSTEM Menu (p.34). See MANUAL PC ADJUSTMENT on pages 36-37.

✔ ***Note:***

- Fine sync, Total dots, Horizontal and Vertical position of certain computers cannot be fully adjusted with the Auto PC Adjustment function. When the image is not provided properly with this operation, manual adjustments are required. (pp. 36-37.)
- Auto PC Adjustment cannot be operated in Digital Signal Input on the DVI terminal and "480p," "575p," "480i," "575i," "720p," "1035i," or "1080i" is selected on the PC SYSTEM Menu.
- Depending on the condition of signals and the type and length of cables, the signals may not be properly viewed.

Manual PC Adjustment

Some computers employ special signal formats which may not be tuned by Multi-Scan system of this projector. Manual PC Adjustment enables you to precisely adjust several parameters to match those special signal formats. The projector has 10 independent memory areas to store those parameters manually adjusted. It allows you to recall the setting for a specific computer.

✔***Note:*** The PC Adjust Menu cannot be operated when the digital signal input on the DVI terminal is selected on PC System Menu.

1 Press the MENU button to display the On-Screen Menu. Use the Point ◀▶ buttons to move the red frame pointer to the PC Adjust Menu icon.

2 Use the Point ▲▼ buttons to move the red frame pointer to the desired item and then press the SELECT button to display the adjustment dialog box. Use the Point ◀▶ buttons to adjust the setting value.

PC ADJUST MENU

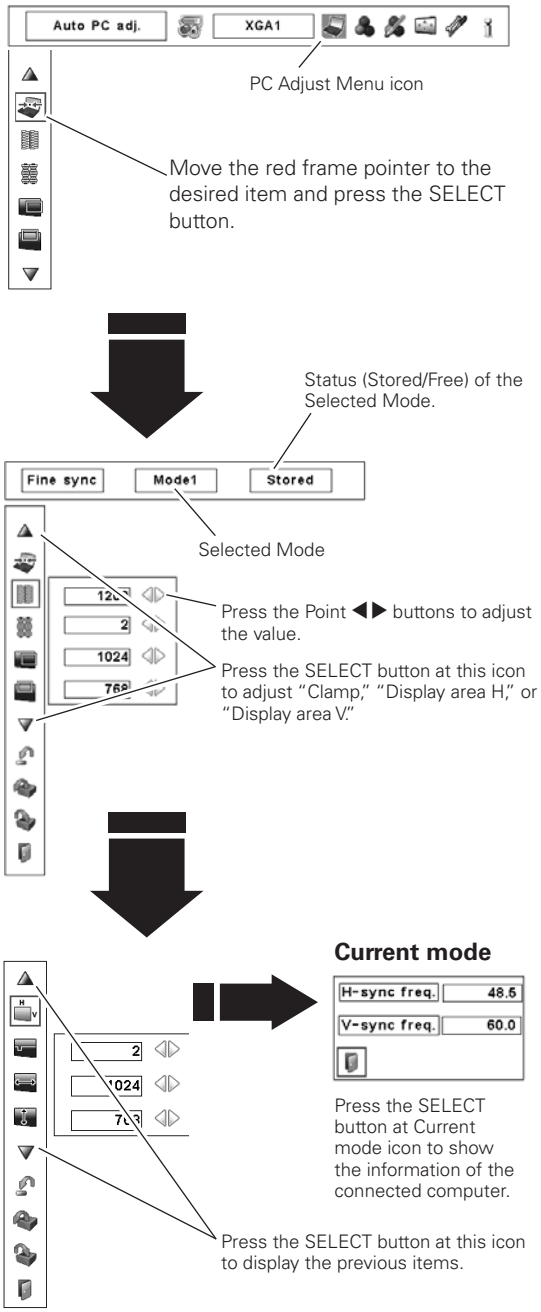

Fine sync

Use the Point ◀▶ buttons to adjust the value, eliminating a flicker from the image displayed (from 0 to 31).

Total dots

Use the Point ◀▶ buttons to adjust the number of total dots in one horizontal period to match your PC image.

Position H

Use the Point ◀▶ buttons to adjust the horizontal picture position.

Position V

Use the Point ◀▶ buttons to adjust the vertical picture position.

Current mode

Press the SELECT button to show H-sync freq. and V-sync freq. of the connected computer.

Clamp

Use the Point ◀▶ buttons to adjust the clamp level. When the image has dark bars, try this adjustment.

Display area H

Use the Point ◀▶ buttons to adjust the horizontal area displayed by this projector.

Display area V

Use the Point ◀▶ buttons to adjust the vertical area displayed by this projector.

Reset

To reset the adjusted data, select Reset and press the SELECT button. A confirmation box appears and then select [Yes]. All adjustments will return to their previous figures.

Mode free

To clear the adjusted data, select Mode free and then press the SELECT button. Move the red arrow pointer to the Mode that you want to clear and then press the SELECT button.

Store

To store the adjusted data, select Store and then press the SELECT button. Move the red arrow pointer to one of the Mode 1 to 10 in which you want to store, and then press the SELECT button.

Quit

Exit the PC Adjust Menu.

To clear the adjusted data.

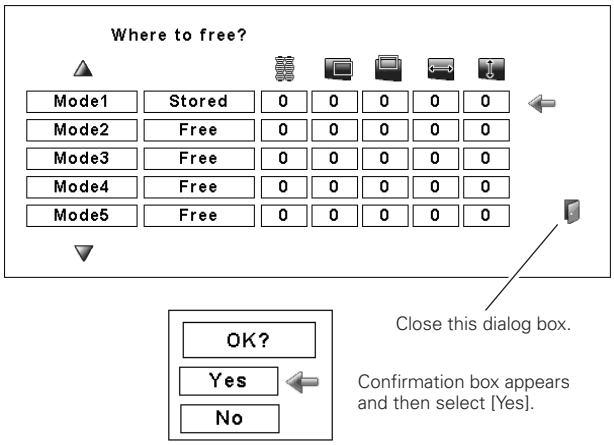

To store the adjusted data.

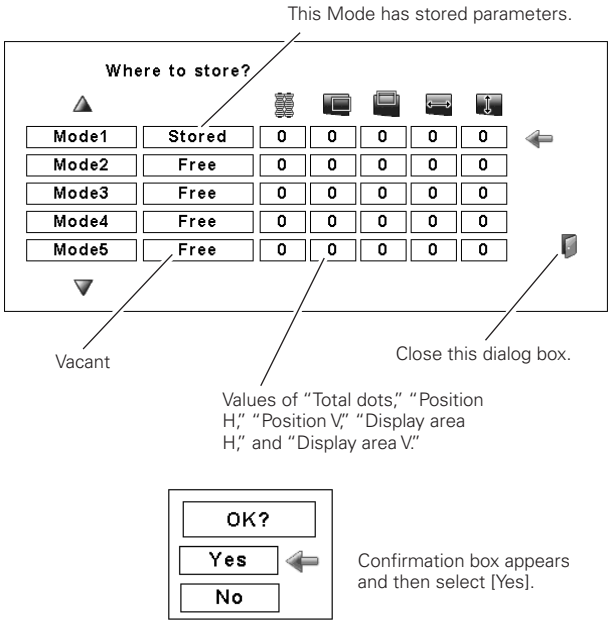

Image Level Selection

Direct Operation

Press the IMAGE SEL. button on the remote control to select the desired image level.

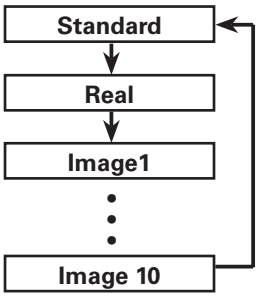

Remote Control

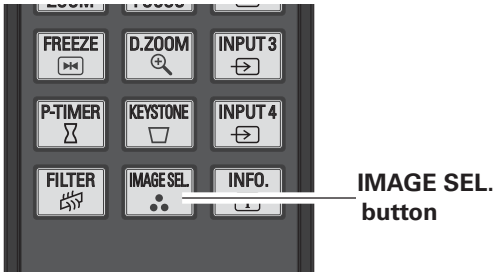

Menu Operation

1 Press the MENU button to display the On-Screen Menu. Use the Point ◀▶ buttons to move the red frame pointer to the Image Select Menu icon.

2 Use the Point ▲▼ buttons to move the red frame pointer to the desired image level and then press the SELECT button.

Standard

Normal picture level preset on the projector.

Real

Picture level with improved halftone for graphics.

IMAGE 1–10

User preset picture adjustment in the Image Adjust Menu. (p. 47)

IMAGE SELECT MENU

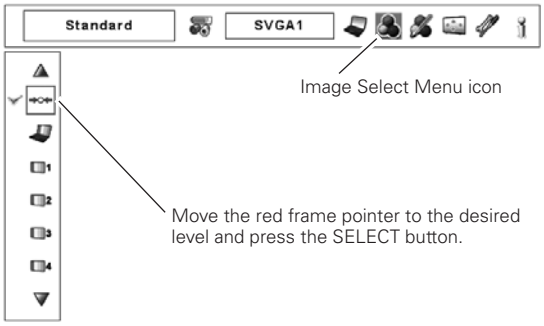

Screen Size Adjustment

Select the desired screen size that conforms to the input signal source.

1 Press the MENU button to display the On-Screen Menu. Use the Point ◀▶ buttons to move the red frame pointer to the Screen Menu icon.

2 Use the Point ▲▼ buttons to move the red frame pointer to the desired function and then press the SELECT button.

SCREEN MENU

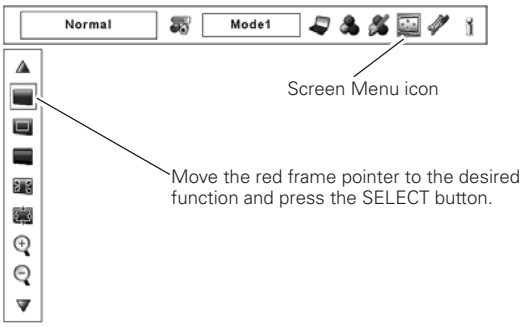

Normal

Provide the image at the normal computer aspect ratio of 4:3.

True

Provide the image in its original size. When the original image size is larger than the screen size (1024 x 768), the projector enters to the panning mode automatically. Use the Point ▲▼◀▶ buttons to pan the image. When adjusted, the arrows will turn red. When reached to the correction limits, the arrows will disappear.

Wide

Provide the image to fit the wide video aspect ratio (16:9) by expanding the image width uniformly. This function can be used to provide the squeezed video signal at 16:9.

Full screen

Provide the full screen image.

Custom

Adjust the screen scale and position manually with this function.
Press the SELECT button at Custom and the "Custom" is displayed on the screen for a few seconds. To display the Aspect dialog box, press the SELECT button at Custom again and then the Aspect dialog box appears.

Scale H/V.....	Adjust the Horizontal/Vertical screen scale.
H&V.....	When set to "On," the aspect ratio is fixed. The "Scale V" appears dimmed and becomes unavailable. Adjust "Scale H," then the screen scale is automatically modified based on the aspect ratio.
Position H/V.....	Adjust the Horizontal/Vertical screen position.
Common	Save the adjusted scale to all the inputs. Press the SELECT button at Common to display a confirmation box. To save the scale, press the SELECT button at "Yes." When Custom is selected, the saved scale is used.
Reset.....	Reset the all adjusted values. Press the SELECT button at Reset to display a confirmation box. To reset, press the SELECT button at "Yes."

✔ ***Note:***

- True, Full screen, and Digital zoom +/– cannot be selected when no signal is detected in the PC System Menu. (p.34)
- The projector cannot display and resolution higher than 1600 x 1200. If your computer's screen resolution is higher than 1600 x 1200, lower the resolution before connecting the projector.
- The image data other than XGA (1024 x 768) is modified to fit the screen size in initial mode.
- The panning function may not operate properly if the stored Mode in the PC Adjust Menu is used. (p. 37)

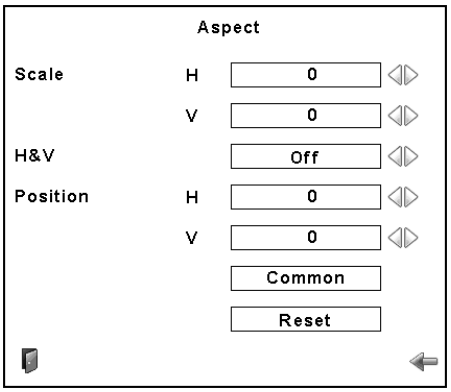

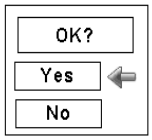

Press the SELECT button at Common or Reset, to display a confirmation box.

✔ ***Note:***

- When no signal is detected, "Normal" is set automatically and the Aspect dialog box disappears.
- The adjustable range for Scale H/V and Position H/V is limited depending on the input signal.

Keystone

This function is used to store or reset the keystone correction when the Main On/Off Switch is pressed to Off or the AC power cord is unplugged. Use the Point ◀▶ buttons to switch between each option.

Store. . . Keep the keystone correction even when the Main On/Off Switch is pressed to Off or the AC power cord is unplugged.

Reset . . Release the keystone correction when the Main On/Off Switch is pressed to Off or the AC power cord is unplugged.

To correct keystone distortion, press the Select button. The Keystone dialog box appears. Use the Point ▲▼◀▶ buttons to correct keystone distortion. (p.30)

Ceiling

When this function is set to "On," the picture is top/bottom and left/right reversed. This function is used to project the image from a ceiling-mounted projector.

Rear

When this function is set to "On," the picture is left/right reversed. This function is used to project the image from the rear of the screen.

Reset

This function returns all adjusted values to the factory default settings. Press the SELECT button at Reset to display a confirmation box. To reset, press the SELECT button at "Yes."

Quit

Exit the Screen Size Adjustment Menu.

For zooming in and out the images

Digital zoom +

Select Digital zoom +. The On-Screen Menu disappears and "D. zoom +" appears. Press the SELECT button to expand the image size. Use the Point ▲▼◀▶ buttons to pan the image. The Panning function can work only when the image is larger than the screen size.
You can also enter the Digital zoom + mode by pressing the D.ZOOM button on the remote control.

Digital zoom –

Select Digital zoom –. The On-Screen Menu disappears and "D.zoom –" appears. Press the SELECT button to compress the image size.
You can also enter the Digital zoom – mode by pressing the D.ZOOM button on the remote control.

To exit the Digital Zoom +/– mode, press any button except the D.ZOOM , SELECT, and Point buttons.

SCREEN MENU

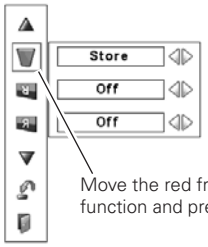

Move the red frame pointer to the desired function and press the SELECT button.

Ceiling

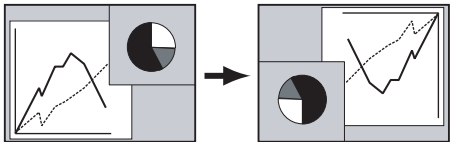

Rear

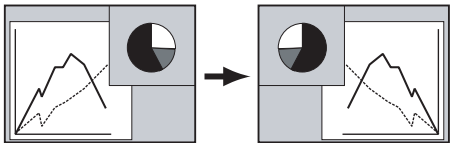

✔***Note:***

- The panning function may not operate properly if the stored Mode in the PC Adjust Menu is used. (p. 37)
- The minimum compression ratio can be limited depending on the input signal or when the Keystone function is working or when the custom is selected for the screen size.
- Digital zoom +/– cannot be selected when Full screen or True is selected.

Video System Selection

1 Press the MENU button to display the On-Screen Menu. Use the Point ◀▶ buttons to move the red frame pointer to the AV System Menu icon.

2 Use the Point ▲▼ buttons to move the red arrow pointer to the desired system and then press the SELECT button.

Video Jack or S-Video Jack

Auto

The projector automatically detects an incoming video system, and adjusts itself to optimize its performance.

PAL/SECAM/NTSC/NTSC4.43/PAL-M/PAL-N

If the projector cannot reproduce proper video image, select a specific broadcast signal format from among PAL, SECAM, NTSC, NTSC 4.43, PAL-M, and PAL-N.

AV SYSTEM MENU (VIDEO OR S-VIDEO)

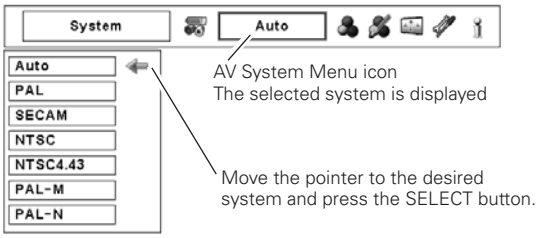

Y, Pb/Cb, Pr/Cr Jacks

Auto

The projector automatically detects an incoming video signal, and adjusts itself to optimize its performance.
When the Video System is 1035i or 1080i, select the system manually.

COMPONENT VIDEO SIGNAL FORMAT

If the projector cannot reproduce proper video image, select a specific component video signal format from among 480i, 575i, 480p, 575p, 720p, 1035i, and 1080i.

AV SYSTEM MENU (COMPONENT VIDEO)

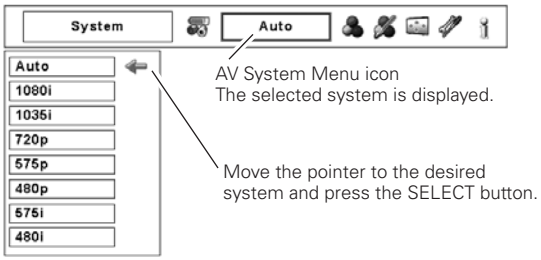

✔ ***Note:***

- The AV System menu cannot be selected when selecting RGB(Scart).

Image Level Selection

Direct Operation

Press the IMAGE SEL. button on the remote control to select the desired image level.

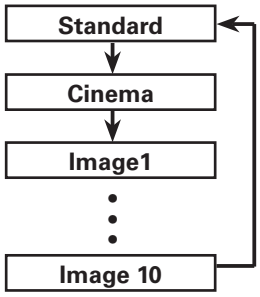

Remote Control

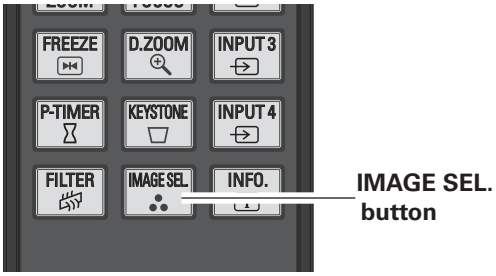

Menu Operation

1 Press the MENU button to display the On-Screen Menu. Use the Point ◀▶ buttons to move the red frame pointer to the Image Select Menu icon.

2 Use the Point ▲▼ buttons to move the red frame pointer to the desired image level and then press the SELECT button.

IMAGE SELECT MENU

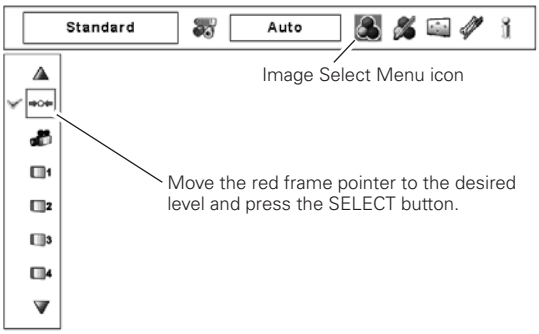

Standard

Normal picture level preset on the projector.

Cinema

Picture level adjusted with fine tone.

IMAGE 1–10

User preset picture adjustment in the Image Adjust Menu. (p. 47)

Screen Size Adjustment

1 Press the MENU button to display the On-Screen Menu. Use the Point ◀▶ buttons to move the red frame pointer to the Screen Menu icon.

2 Use the Point ▲▼ buttons to move the red frame pointer to the desired function and then press the SELECT button.

SCREEN MENU

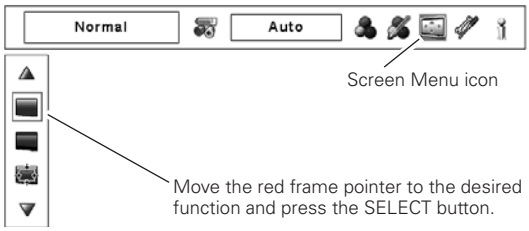

Normal

Provide the image at the normal video aspect ratio of 4:3.

Wide

Provide the image at the wide screen ratio of 16:9.

Custom

Adjust the screen scale and position manually with this function.
Press the SELECT button at Custom and the "Custom" is displayed on the screen for a few seconds. To display the Aspect dialog box, press the SELECT button at Custom again and then the Aspect dialog box appears.

Scale H/V	Adjust the Horizontal/Vertical screen scale.
H&V	When set to "On," the aspect ratio is fixed. The "Scale V" appears dimmed and becomes unavailable. Adjust "Scale H," then the screen scale is automatically modified based on the aspect ratio.
Position H/V	Adjust the Horizontal/Vertical screen position.
Common	Save the adjusted scale to all the inputs. Press the SELECT button at Common to display a confirmation box. To save the scale, press the SELECT button at "Yes." When Custom is selected, the saved scale is used.
Reset	Reset the all adjusted values. Press the SELECT button at Reset to display a confirmation box. To reset, press the SELECT button at "Yes."

✔ ***Note:***

- Wide cannot be operated when "720p," "1035i," or "1080i" is selected on AV System Menu (p.41).

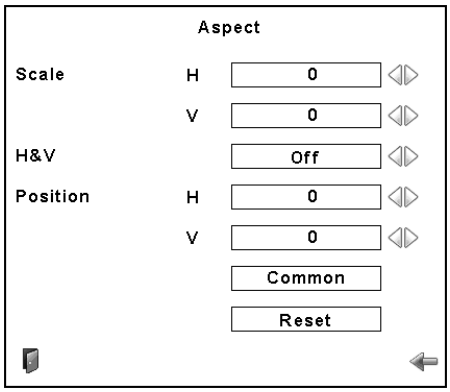

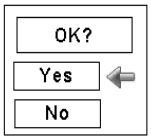

Press the SELECT button at Common or Reset, to display a confirmation box.

✔ ***Note:***

- When no signal is detected, "Normal" is set automatically and the Aspect dialog box disappears.
- The adjustable range for Scale H/V and Position H/V is limited depending on the input signal.

Keystone

This function is used to store or reset the keystone correction when the Main On/Off Switch is pressed to Off or the AC power cord is unplugged. Use the Point ◀▶ buttons to switch between each option.

Store. . . Keep the keystone correction even when the Main On/Off Switch is pressed to Off or the AC power cord is unplugged.

Reset . . Release the keystone correction when the Main On/Off Switch is pressed to Off or the AC power cord is unplugged.

To correct keystone distortion, press the Select button. The Keystone dialog box appears. Use the Point ▲▼◀▶ buttons to correct keystone distortion. (p.30)

Ceiling

When this function is set to "On," the picture is top/bottom and left/right reversed. This function is used to project the image from a ceiling-mounted projector.

Rear

When this function is set to "On," the picture is left/right reversed. This function is used to project the image from the rear of the screen.

Reset

This function returns all adjusted values to the factory default settings. Press the SELECT button at Reset to display a confirmation box. To reset, press the SELECT button at "Yes."

Quit

Exit the Screen Size Adjustment Menu.

SCREEN MENU

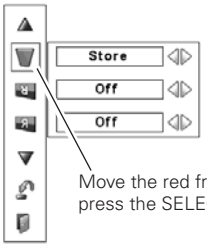

Move the red frame pointer to a function and press the SELECT button.

Ceiling

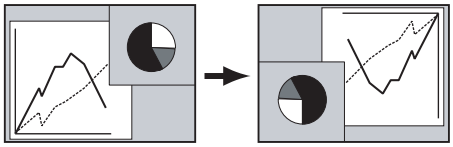

Rear

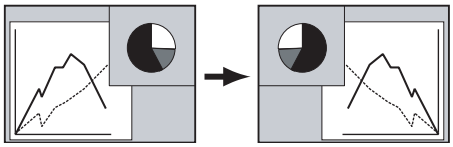

Image Adjustment

1 Press the MENU button to display the On-Screen Menu. Use the Point ◀▶ buttons to move the red frame pointer to the Image Adjust Menu icon.

2 Use the Point ▲▼ buttons to move the red frame pointer to the desired item and then press the SELECT button to display the adjustment dialog box. Use the Point ◀▶ buttons to adjust the setting value.

IMAGE ADJUST MENU

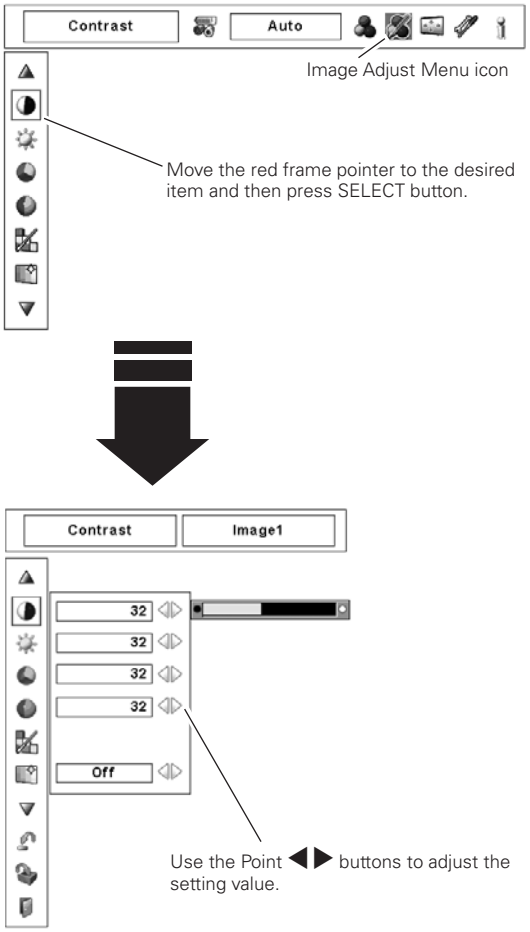

Contrast

Press the Point ◀ button to decrease contrast; press the Point ▶ button to increase the contrast (from 0 to 63).

Brightness

Press the Point ◀ button to decrease the brightness; press the Point ▶ button to increase the brightness (from 0 to 63).

Color ✻

Press the Point ◀ button to decrease the intensity of the color; press the Point ▶ button to increase the intensity of the color (from 0 to 63).

Tint ✻

Press the Point ◀▶ buttons to adjust the tint value to obtain proper color balance (from 0 to 63).

Color Management

The Color Management function can be used to adjust the LEVEL, PHASE, and GAMMA of the selected display colors (except for black, white, and gray) on the screen and replace these colors with other colors if required.
You can store up to eight (8) color management data.

1 Use the Point ▲▼ buttons to move the red frame pointer to Color Management, and then press the SELECT button. The projected image freezes, and the COLOR MANAGEMENT POINTER appears.

2 Use the Point ▲▼◀▶ buttons to move the pointer to the spot where you want to adjust the color and then press the SELECT button. The COLOR SELECTION window appears, and the color in the center of the pointer is selected and you can adjust the color.

3 Use the Point ▲▼◀▶ buttons to adjust the LEVEL and PHASE of the color, and then press the SELECT button to confirm the setting. Then use the Point ▲▼ buttons to adjust the GAMMA for the color and press the SELECT button to accept the setting. After adjusting, press the SELECT button to go to the COLOR MANAGEMENT LIST.

POINTER MODE

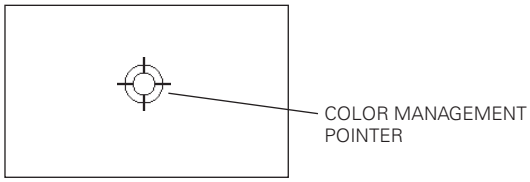

COLOR SELECTION MODE

LIST

Go to the COLOR MANAGEMENT LIST.

✔ ***Note:***

✻ Displayed in grayout in the computer Input.
- Tint cannot be selected when the video system is PAL, SECAM, PAL-M, or PAL-N (p.41).
- Color management is displayed in grayout when there is no signal .

COLOR SELECTION MODE (continued)

COLOR M.

Return to the COLOR MANAGEMENT POINTER. (If you press the MENU button on the side control or the remote control, it returns to the COLOR MANAGEMENT POINTER and you will need to reselect and readjust the color.)

MENU

Return to the IMAGE ADJUST Menu. Any settings that have been changed will not be stored. To store the changed settings, be sure to select "LIST" and go to the COLOR MANAGEMENT LIST.

4 In the COLOR MANAGEMENT LIST, the adjusted color data are checkmarked. You can decide whether or not to apply the adjusted color data in the list to the projected image (see below).

LIST MODE

✓

Clear the check mark if you do not want to apply the adjusted color data; select the check mark and then press the SELECT button. The check mark disappears.

COLOR PALETTE

Return to the COLOR SELECTION mode so that you can readjust the setting for the color in that line. (This option is not available if the check mark is cleared.)

DEL

Select the DEL box if you want to delete the adjusted data. Press the SELECT button and a confirmation box appears and then select [Yes].

ALL DEL

Delete all the data in the list. Press the SELECT button and a confirmation box appears and then select [Yes].

MENU

The same function as stated above.

COLOR M.

The same function as stated above.

Auto picture control

Use the Point ◀▶ buttons to select the desired Auto picture control position (Off, L1 or L2).

Off . . . . Auto picture control OFF position.
L1 . . . . . Auto picture control LEVEL 1 position.
L2 . . . . . Auto picture control LEVEL 2 position.

Color temp.

Use the Point ◀▶ buttons to select the desired Color temp. level (XLow, Low, Mid, or High).

COLOR SELECTION MODE

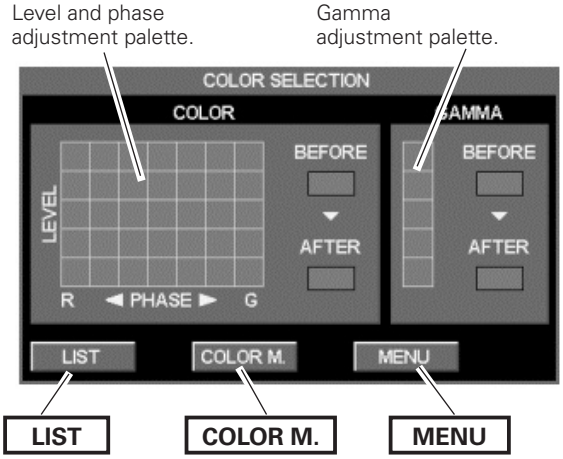

LIST MODE

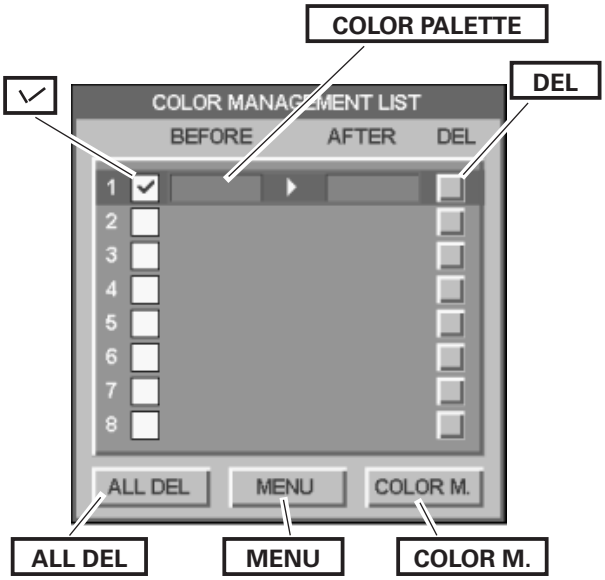

White balance (Red/Green/Blue)

Press the Point ◀ button to lighten red/green/blue tone; press the Point ▶ button to deepen red/green/blue tone (from 0 to 63).

Offset (Red/Green/Blue)

Press the Point ◀ button to lighten red/green/blue tone of the black level of an image; press the Point ▶ button to deepen red/green/blue tone of the black level of an image (from 0 to 63).

Sharpness

Press the Point ◀ button to decrease the sharpness of the image; press the Point ▶ button to increase the sharpness of the image (from 0 to 31).

Gamma

Use the Point ◀▶ buttons to adjust the gamma value to obtain a better balance of contrast (from 0 to 15).

Noise reduction ✻

Noise interference on the screen can be reduced. Press the Point ◀▶ buttons to change the noise reduction mode.

Off . . . . Noise reduction mode is "Off"
On . . . . Noise reduction mode is "On"

Progressive ✻

An interlaced video signal can be displayed in progressive mode. Press the Point ◀▶ buttons to change the progressive scan mode.

Off . . . . Progressive scan mode is "Off."
On . . . . Progressive scan mode is "On."
Film . . . For watching a film. With this function, the projector reproduces pictures faithful to the original film quality.

✔***Note:***

•Picture is distorted at the moment of On/Off /Film switching.

Reset

To reset the adjusted data, select Reset and press the SELECT button. A confirmation box appears and then select [Yes]. All adjustments will return to their previous figures.

Store

To store the adjusted data, move the red frame pointer to the Store icon and press the SELECT button. The Image Level Menu appears. Move the red arrow pointer to any of the Image 1 to 10 in which you want to set and press the SELECT button. A confirmation box appears and then select [Yes].

Quit

Exit the Image Adjust Menu.

✔***Note:***

✻ Displayed in grayout in the computer Input.

•When the White balance Red, Green, or Blue is adjusted, the Color temp. level will change to "Adj."
•The Film mode in the Progressive function cannot be selected when the video signal format is 1080i or 1035i.
•Progressive cannot be selected when "480p," "575p," or "720p" is selected (p.41).

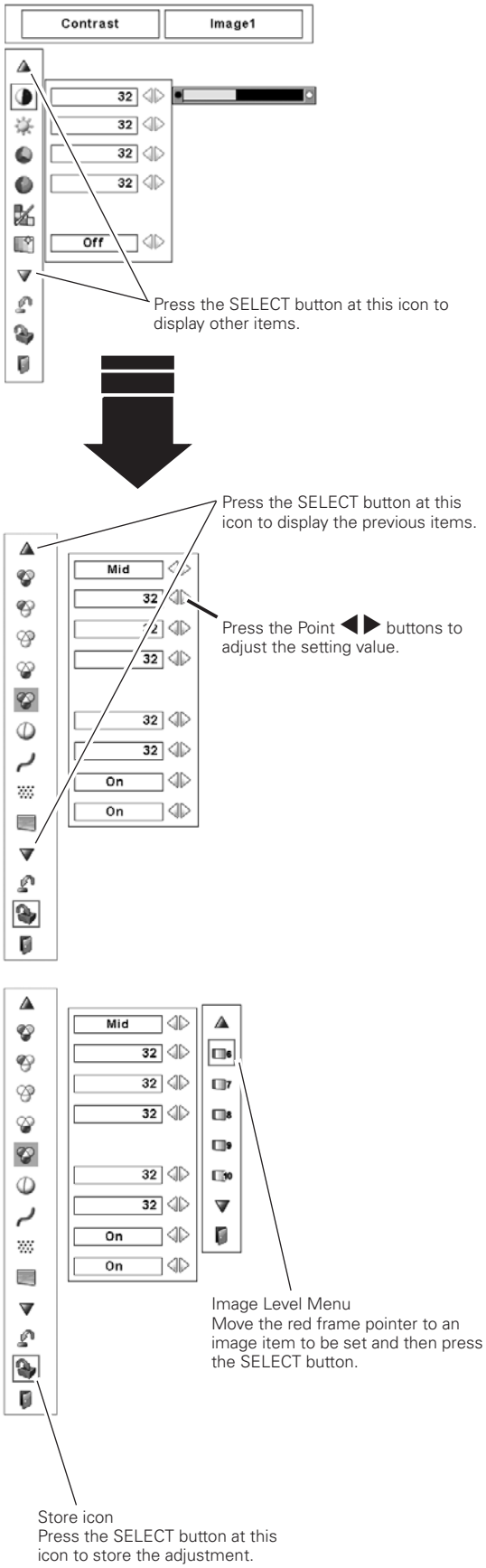

Setting

This projector has a Setting menu that allows you to set up other various functions.

1 Press the MENU button to display the On-Screen Menu. Use the Point ◀▶ buttons to move the red frame pointer to the Setting Menu icon.

2 Use the Point ▲▼ buttons to move the red frame pointer to the desired item and then press the SELECT button. The Setting dialog box appears.

Language

The language used in the On-Screen Menu is available in English, German, French, Italian, Spanish, Portuguese, Dutch, Swedish, Russian, Chinese, Korean, or Japanese.

Menu

This function allows you to adjust the position of the On-Screen Display and the value adjustment bar in the Picture Image Adjustment Menu.

Position

This function is used to adjust the On-Screen Menu display position. Press the SELECT button and the adjustment screen appears (arrows appear). Use the Point ▲▼◀▶ buttons to adjust the position. After making the adjustment, press the SELECT button to return to the Menu screen.

Simple menu

When this function is set to "On," the value adjustment bar in the Picture Image Adjustment Menu appears on the screen.

Display

This function decides whether to display On-Screen Displays.

On . . . . . Show all the On-Screen Displays. Use this function when you want to project images after the lamp becomes bright enough. The factory default setting is in this option.

Countdown Off. . . Show the input image instead of the countdown when turning on the projector. Use this function when you want to project the image as early as possible even when the lamp is not bright enough.

Off . . . . . Hide the On-Screen Displays except:
- On-Screen Menu
- "Power off?" (p.24)
- Color management operation screen (pp.45-46)
- "No signal" for Power management (p.52)
- P-TIMER (p.30)
- "Please wait...." for Auto PC adjustment (p.35)
- Arrows for panning mode

Background

The selected background screen will be displayed when no input signal is detected.

Blue . . . Blue colored background.
User . . . The image you captured.
Black. . . Black colored background.

SETTING MENU (Language)

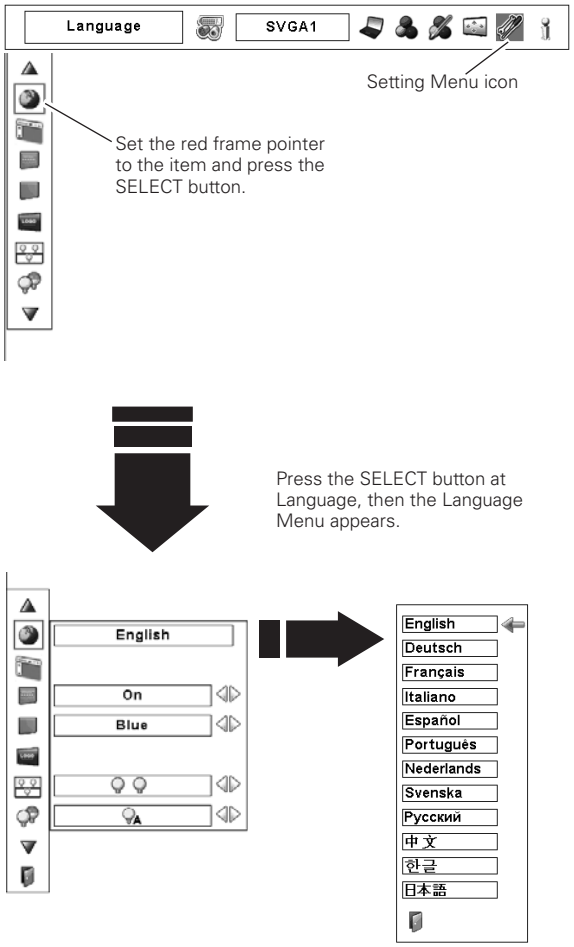

Menu

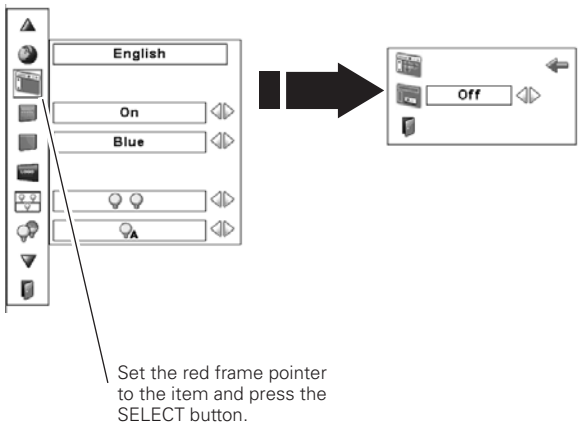

✔***Note:***

- "User" cannot be selected when the image is not captured.

Logo

This function allows you to customize the screen logo with Logo select, Capture, and Logo PIN code lock functions.

✔Note:

- When "On" is selected in the Logo PIN code lock function, Logo select and Capture functions cannot be selected.

Logo select

This function decides on the starting-up display from among the following options.

User . . . Show the image you captured.
Default . Show the factory-set logo.
Off . . . . Show the countdown display only.

Capture

This function enables you to capture an image being projected to use it for a starting-up display or interval of presentations.

Select Capture and press the SELECT button.
A confirmation box appears and select [Yes] to capture the projected image.

After capturing the projected image, go to the Logo select function and set it to "User". Then the captured image will be displayed the next time you turn on the projector.

To cancel the Capture function, select [No].

✔Note:

- Before capturing an image, select "Standard" in the Image Select Menu to capture a proper image. (pp. 38, 42)
- A signal from a computer can be captured up to XGA (1024 x 768).
- Certain signals may not be captured properly.
- When capturing the image that has been adjusted by the Keystone function, the adjusted data is automatically reset and the projector captures an image without keystone correction.
- When starting to capture a new image, the previously stored image is cleared even if you cancel the capturing.
- Once you exit the Logo Menu after setting the Logo lock to "On," you are required to enter the PIN code every attempting to change the Logo setting.
- "User" cannot be selected when the image is not captured.

Logo

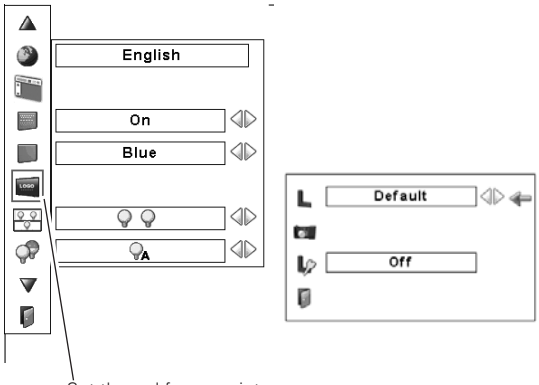

Set the red frame pointer to the item and press the SELECT button.

Capture

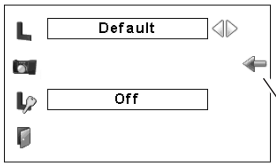

Set the pointer (red arrow) to the item and press the SELECT button.

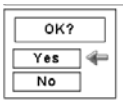

Select [Yes] to capture the projected image.

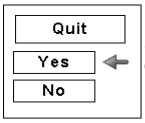

Select [Yes] to stop capturing.

Logo PIN code lock

This function prevents an unauthorized person from changing the screen logo.

Off . . . . The screen logo can be changed freely from the Logo Menu.
On . . . . The screen logo cannot be changed without a Logo PIN code.

If you want to change the Logo PIN code lock setting, press the SELECT button and the Logo PIN code dialog box appears. Enter a Logo PIN code by following the steps below. The initial Logo PIN code is set to "4321" at the factory.

Enter a Logo PIN code

Use the Point ▲▼ buttons on the side control or on the remote control to enter a number. Press the Point ▶ button to fix the number and move the red frame pointer to the next box. The number changes to "✳." Repeat this step to complete entering a four-digit number. After entering the four-digit number, move the pointer to "Set." Press the SELECT button so that you can change the Logo PIN code lock setting.

If you fixed an incorrect number, use the Point ◀ button to move the pointer to the number you want to correct, and then enter the correct number.

If you entered an incorrect Logo PIN code, "Logo PIN code" and the number (✳✳✳✳) will turn red for a moment. Enter the correct PIN code all over again.

Change the Logo PIN code lock setting

Use the Point ◀▶ buttons to switch On/Off, and then press the Point ▼ button to move the pointer to "Quit." Press the SELECT button to close the dialog box.

Change the Logo PIN code

Logo PIN code can be changed to your desired four-digit number. Press the Point ▼ button to select "Logo PIN code change" and then press the SELECT button. The New Logo PIN code input dialog box appears. Set a new Logo PIN code.

Be sure to note the new Logo PIN code and keep it on hand. If you lost the number, you could no longer change the Logo PIN code setting. For details on PIN code setting, refer to "PIN code lock" on pages 53–54.

Logo PIN Code Lock

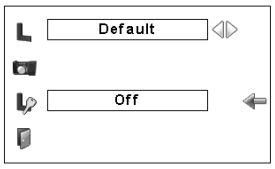

Enter a Logo PIN code

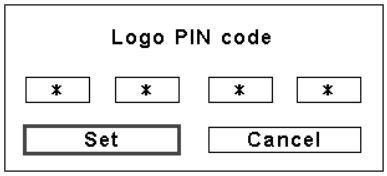

After a correct Logo PIN code is entered, the following dialog box appears.

Change the Logo PIN code lock setting

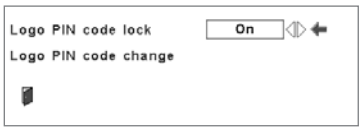

Use the Point ◀▶ buttons to switch On/Off,

Change the Logo PIN code

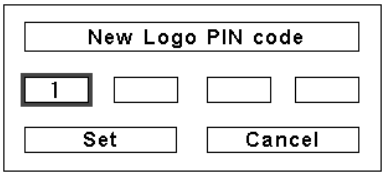

CAUTION:
WHEN YOU HAVE CHANGED THE LOGO PIN CODE, WRITE DOWN THE NEW PIN CODE IN COLUMN OF THE LOGO PIN CODE NO. MEMO ON PAGE 80, AND KEEP IT SECURELY. SHOULD THE LOGO PIN CODE BE LOST OR FORGOTTEN, THE LOGO PIN CODE SETTING CAN NO LONGER BE CHANGED.

Lamp mode

This Projector is equipped with 2 Projection Lamps and the number of using lamps can be switched to 2 lamps or 1 lamp. Using 1 lamp maintains the life of Projection Lamps.

To change over Lamp Mode

Set "2 lamps mode" or "1 lamp mode" by pressing the Point ◀▶ buttons. When the Lamp Mode is switched from "2 lamps mode" to "1 lamp mode", the image becomes a little darker. When the Lamp Mode is switched from "1 lamp mode" to "2 lamps mode", the image becomes brighter gradually.

✔***Note:***

- When neither of the two lamps is lighted, the projector will shutdown automatically.
- When either of the two lamps does not light up, the LAMP 1/2 REPLACE indicator blinks orange and the projector will light the other automatically.
- After changing the Lamp Mode, it cannot be switched again for 90 seconds.

Lamp control

This function allows you to change the brightness of the screen.

Auto . . . . . Brightness according to the input signal.
Normal . . . Normal brightness.
Eco . . . . . Lower brightness. Lower brightness reduces the lamp power consumption and extends the lamp life.

Filter control

You can replace the filter with this function. Press the SELECT button at Filter control to display a confirmation box. To replace, press the SELECT button at "YES" and the electrically operated filter starts to scroll.

You can also replace the filter by using the remote control (p. 30).

✔***Note:***

- Filter replacement icon and "Please wait..." message appear on the screen when the filter is being scrolled.
- The filter cannot be rewound.
- When the filter is replaced, the total accumulated time of the filter use is automatically set to 0.

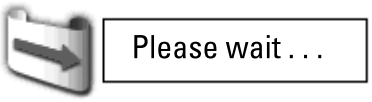

Fan control

Choose the running speed of cooling fans from the following options.

Normal..... Normal speed.
Max ..... Faster than the normal speed.

Remote control

The eight different remote control codes (Code 1–Code 8) are assigned to the projector; the factory-set, initial code (Code 1) and the other seven codes (Code 2 to Code 8).

The same code should be set on both the projector and the remote control. For example, operating the projector in "Code 7", the remote control code also must be switched to "Code 7".

To change the code for the projector;
Select a remote control code in this Setting Menu.

To change the code for the remote control;
Check the Reset Switch to "Use position" in the compartment lid on the back of the remote control.
And then while holding down the MENU button, press and release the IMAGE ADJ. button the number of corresponding times you would like to set the number of the remote control code for the projector. (See page 16)

To reset the code for the remote control;
Slide the Reset Switch to "Reset position" in the compartment lid on back of the remote control.

Remote control

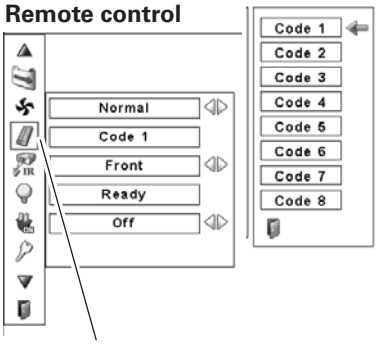

When pressing the SELECT button at Remote control, the Remote control code menu appears.

RC sensor

Select a location of the infrared remote receiver of the remote control. See "Remote Control Receivers and Operating Range" on page 15 for details.

Both..... Activate both the front and back receiver.
Front..... Activate only the front receiver.
Back..... Activate only the back receiver.

Power management

For reducing power consumption as well as maintaining the lamp life, the Power management function turns off the projection lamp when the projector is not used for a certain period.

If the input signal is interrupted and no button is pressed for more than 30 seconds, the timer display with "No signal" appears. It starts the countdown until the lamp is turned off. The countdown time can be set between 1 and 30 minutes.
Use the Point ◀▶ buttons to set the countdown timer.

Select one of the following options:

Ready . . . . When the lamp has been fully cooled down, the READY indicator starts blinking. In this condition, the projection lamp is turned on if the input signal is reconnected or any button on the side control or remote control is pressed .
Shutdown . . When the lamp has been fully cooled down, the power is turned off.
Off . . . . . Power Management function is off.

✔***Note:***

- Factory default is "Ready: 5 min."
- When the shutter is closed while the Power management function is working, the Power management function is released.

Power management

Time left before the lamp is off

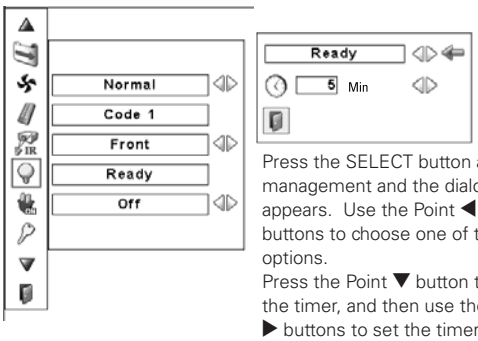

Press the SELECT button at Power management and the dialog box appears. Use the Point ◀▶ buttons to choose one of the three options.
Press the Point ▼ button to select the timer, and then use the Point ◀▶ buttons to set the timer

On start

When this function is set to "On," the projector will be automatically turned on just by connecting the AC power cord to the wall outlet.

✔Note:

- Make sure that the MAIN ON / OFF switch is ON, otherwise the On start function does not work.
- Be sure to turn off the projector properly (see "Turning Off the Projector" on page 24). If the projector is turned off in the incorrect sequence, the On start function does not work properly.

Security

Key lock

This function locks the side control and remote control buttons to prevent operation by unauthorized persons.

. . . . . Unlocked.

. . . . . Lock the side control buttons.
To unlock, use the remote control.

. . . . . Lock the remote control buttons.
To unlock, use the side control.

If the side control accidentally becomes locked and you do not have the remote control nearby and unable to operate the projector, contact the service station.

Security

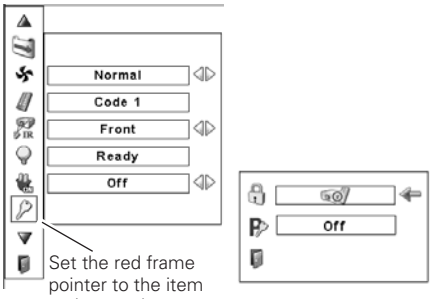

Set the red frame pointer to the item and press the SELECT button.

Key lock

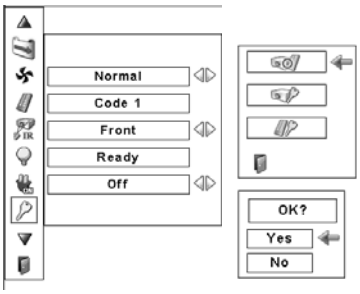

Select Key lock and this box appears. Choose one of the alternatives with the Point ▲▼ buttons and select [Yes] to activate it.

PIN code lock

This function prevents the projector from being operated by unauthorized persons and provides the following setting options for security.

Off . . . . Unlocked.
On1 . . . Enter the PIN code every time turning on the projector.
On2 . . . Enter the PIN code to operate the projector once the Main On/Off Switch is pressed to Off or the power cord is unplugged ; as long as the AC power cord is connected and the Main On/Off Switch is pressed to ON, the projector can be operated without a PIN code.

Whenever you change the PIN code lock setting or the PIN code (the four-digit number), you are required to enter the PIN code. "1234" is set as the initial PIN code at the factory.

If you want to change the PIN code lock setting, press the SELECT button and the PIN code dialog box appears. Enter a PIN code by following the steps on the next page.

PIN code lock

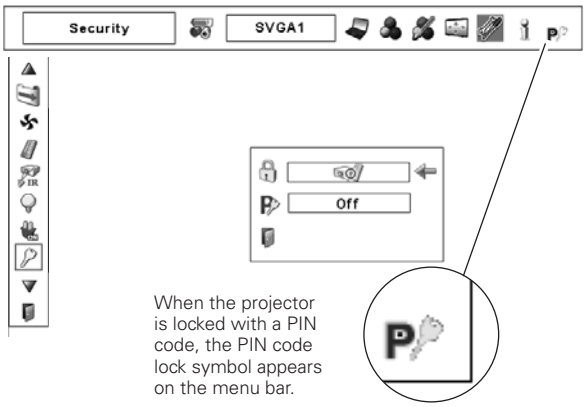

When the projector is locked with a PIN code, the PIN code lock symbol appears on the menu bar.

Enter a PIN code

Use the Point ▲▼ buttons on the side control or on the remote control to enter a number. Press the Point ▶ button to fix the number and move the red frame pointer to the next box. The number changes to "✳." Repeat this step to complete entering a four-digit number. After entering the four-digit number, move the pointer to "Set." Press the SELECT button so that you can change the PIN code lock setting .

If you fixed an incorrect number, use the Point ◀ button to move the pointer to the number you want to correct, and then enter the correct number.

If you entered an incorrect PIN code, "PIN code" and the number (✳✳✳✳) will turn red for a moment. Enter the correct PIN code all over again.

Enter a PIN code

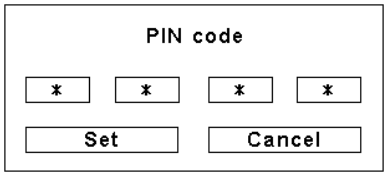

After a correct Logo PIN code is entered, the following dialog box appears.

Change the PIN code lock setting

Use the Point ◀▶ buttons to switch between the options.

Change the PIN Code Lock setting

Use the Point ◀▶ button to select Off, On1, or On2 and then move the pointer to "Quit" with the Point ▼ button. Press the SELECT button to close the dialog box.

Change the PIN Code

The PIN code can be changed to your desired four-digit number. Press the Point ▼ buttons to select "PIN code change" and press the SELECT button. The New PIN code input dialog box appears. Set a new PIN code.

CAUTION:
WHEN YOU HAVE CHANGED THE PIN CODE, WRITE DOWN A NEW PIN CODE IN COLUMN OF THE PIN CODE NO. MEMO ON PAGE 80, AND KEEP IT SECURELY. IF YOU FORGET YOUR PIN CODE, THE PROJECTOR CAN NO LONGER BE STARTED.

Change the PIN code

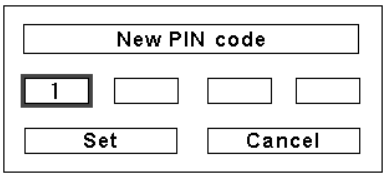

Projector ID

This feature allows users to set serial communication configuration (Projector ID) when several projectors are connected via the RS-232C terminal (serial port) of the projector.

Use the Point ◀▶ buttons to adjust the Projector ID.

● Projector ID ... 1 - 999. (Factory default setting : Projector ID 1)

Shutter

Shutter function is available to block out light to the screen, so that the screen can be used for the other presenters.

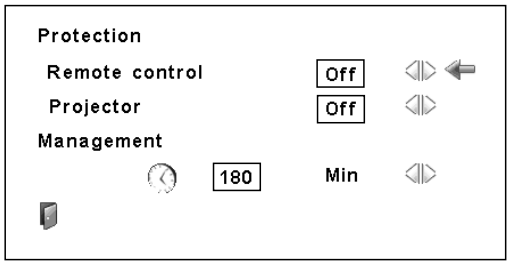

Protection

Prohibits the shutter operation from the remote control and the projector's side control.

Remote control	Selecting "On" prohibits the shutter operation from the remote control.
Projector . . .	Selecting "On" prohibits the shutter operation from the side control.

It is possible to prohibit the shutter operation from both of the remote control and the side control.

Management

The Shutter Management function turns off the projection lamp when the projector is left with the shutter closed and the set time has passed away. The count-down time can be set between 5 and 180 minutes. When the count-down time has elapsed, the shutter will be opened up automatically and the lamp will be turned off to cool itself down. The SHUTTER indicator is blinking blue during this cooling-off period. When the lamp has been fully cooled down, the READY indicator turns green lighting and the SHUTTER indicator keeps blinking. Should the ON / STAND-BY button be pressed in this condition, the projection lamp will be turned on and the SHUTTER indicator turns off.

✔***Note:***
- The Factory default value is set to 180 minutes for the count down time.
- The Shutter Management function cannot be halted.

Lamp counter

This function is used to reset the lamp counter.

When the lamp life reaches a recommended lamp replacement time, the time shown in the dialog box turns red and the Lamp replacement icon appears on the screen, indicating that the end of lamp life is approaching.

When replacing the projection lamp, reset the lamp counter. See “Resetting the Lamp Counter” on page 62.

✔***Note:***
- The Lamp replacement icon will not appear when the Display function is set to “Off” (p.48), or during “Freeze” (p.29).

This icon appears on the screen when the end of lamp life is approaching.

✔***Note:***
- This icon also appears at turning on and selecting input source.

Filter counter

This function is used to set a time for the filter replacement.

Use the Point ▲▼ buttons to move the red frame pointer to Filter counter and then press the SELECT button. A dialog box appears showing the Used time option and the Scrolls remaining option.

Used Time . . . . . Show the total accumulated time of the filter use, timer setting option and the Reset options. When the projector reaches a time set in the timer setting, the Filter replacement icon (Fig. 1) appears on the screen and the total accumulated time turns red, indicating that the filter replacement is necessary. If the filter is out of scroll and the projector reaches a time set in the timer setting, Fig. 2 appears on the screen, indicating that the filter cartridge replacement is necessary.

Scrolls remaining . . Show the scroll counter and the Reset options. When the filter scroll is counted down to 1 (Scroll counter on the screen is showing "0 scroll(s)" , the last scroll icon (Fig. 3) appears on the screen. When the filter scroll is counted down to 0, the Filter cartridge replacement icon (Fig. 4) appears on the screen and the WARNING FILTER indicator lights orange, indicating that the filter cartridge replacement is necessary.

To set a timer, press the SELECT button on Used time option. Move the red arrow pointer to the timer setting option and use the Point ◀▶ buttons to select from (Off/ 400H/700H/1000H) depending on the use environment.

When replacing the Filter cartridge, reset the Filter counter and the Scroll counter (p.59).

✔***Note:***
- Do not reset the Filter counter and the Scroll counter without replacing the Filter cartridge. Be sure to reset the Filter counter and the Scroll counter only after replacing the Filter cartridge.
- Timer setting notifies that the filter needs replacement. To replace the filter, use the filter control function (p.51).

Test pattern

Various test pattern are available for use when setting up the projector.

Factory default

This function returns all setting values except for the user logo, PIN code lock, Logo PIN code lock, lamp counter, filter counter and filter timer to the factory default settings.

Quit

Exit the Setting Menu.

Filter counter

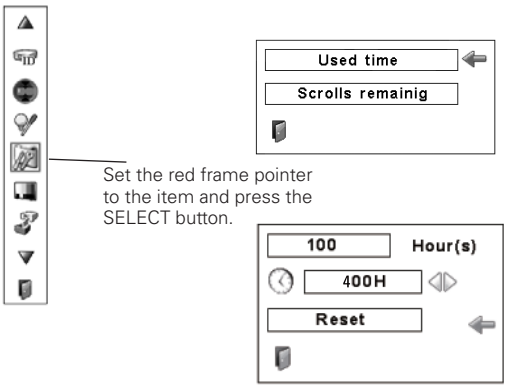

Use the Point ◀▶ buttons to set the timer. Select from (Off/ 400H/700H/1000H) depending on the use environment

Fig.1 Filter replacement icon

Filter replacement icon appears on the screen at a set time.

Fig.2

Fig.3 Last scroll icon

Last scroll icon appears on the screen when the filter is down to the last scroll.

Fig.4 Filter cartridge replacement icon

Filter cartridge replacement icon appears on the screen when the filter scroll is counted down to 0 scroll.

✔***Note:***
- Fig.1, Fig. 2, Fig. 3 or Fig. 4 will appear at turning on and selecting input source.
- Fig.1, Fig. 2, Fig. 3 or Fig. 4 will not appear when the Display function is set to "Off" (p.48), or during "Freeze" (p.29).

Factory default

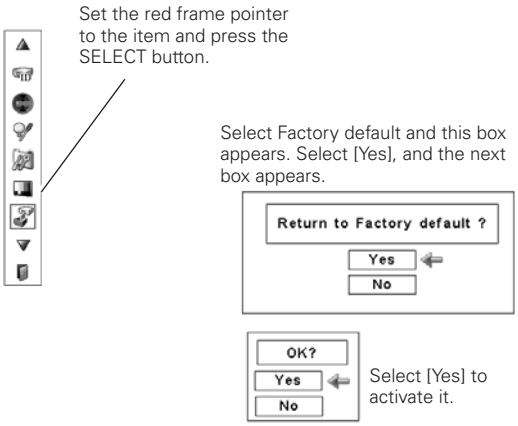

Filter Instructions

Filter prevents dust from accumulating on the optical elements inside the projector. Should the filter becomes clogged with dust particles, it will reduce cooling fans' effectiveness and may result in internal heat buildup and adversely affect the life of the projector. This projector has an electrically operated filter which helps you to replace the filter easily. The projector monitors the condition of the filter at all time and replaces a filter with a new one automatically when it detects the clogging.

If the projector reaches a time set in the timer setting (p. 56), a Filter replacement icon (Fig.1) appears on the screen and the WARNING FILTER indicator on the top panel lights up (p.74). When you see this icon, replace the filter as soon as possible (pp.30, 51). If the filter is out of scroll and the projector reaches a time set in the timer setting, Fig. 2 appears on the screen, indicating that the filter cartridge replacement is necessary.

Fig.1 Filter replacement icon

Fig.2

When the filter scroll is counted down to 1, the Last scroll icon (Fig.3) appears on the screen, indicating that there is one scroll left in the filter cartridge (p.56).

Fig.3 Last scroll icon

If the projector detects that the filter is clogged and no scroll is left in the filter cartridge, a Filter cartridge replacement icon (Fig. 4) appears on the screen and the WARNING FILTER indicator on the top panel lights up (p.74). When you see this icon, replace the filter cartridge (p.58) and reset the Filter counter (p.59) and the Scroll counter (p.59).

Fig.4 Filter cartridge replacement icon

When the filter is being scrolled by the remote control (p.30) or the Filter control function in the setting menu (p.51), a Filter replacement icon and "Please wait..." message (Fig.5) appear on the screen and the WARNING FILTER indicator blinks slow (approx. 2 seconds ON, 2 seconds OFF) (p.72).

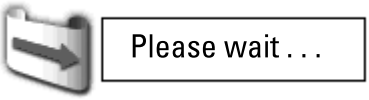

Fig.5 Filter replacement icon and "Please wait..." message.

The WARNING FILTER indicator blinks fast when the projector detects an abnormal condition, the filter cartridge is not installed properly, or the filter scroll is not working properly (p.74).

✔***Note:***

- Fig.1, Fig.2, Fig.3 or Fig. 4 will not appear when the Display function is set to "Off" (p.48), or during "Freeze" (p.29).
- The filter cannot be rewound.
- The filter can be scrolled 9 times since the filter cartridge has 10 scrolls.
- The filter cartridge is disposable. Do not clean and reuse the filter cartridge.
- Do not expose the filter cartridge to water or liquid, or it may cause a breakdown.
- Replace the filter cartridge after all the scroll is used up. If you replace the filter cartridge when there are some scrolls left in the filter cartridge, the filter counter and the scroll counter do not recognize the correct number of remaining scrolls and the reset function cannot work properly. It may cause a breakdown.
- The used part of the filter can be seen on the edge of the Filter cartridge after scrolling the filter, but there is no problem for the use of the projector.
- Do not use the filter cartridge with other projector. The filter counter and the scroll counter do not recognize the correct number of remaining scrolls of the used filter cartridge and the reset function cannot work properly. It may cause a breakdown.
- Make sure that the projection lamps are turned off when you are replacing the filter cartridge. If you replace the filter cartridge when the projection lamps are turned on, the projector will be shut down automatically for safety purposes.
- Do not forget to reset the filter counter and the scroll counter in the setting menu after replacing the filter cartridge. If you forget to reset the filter counter and the scroll counter, the projector cannot recognize the correct number of remaining scrolls and it may cause a breakdown.
- When the projector is kept used for 3 minutes without getting the filter cartridge replaced after the Fig.4 appears on the screen, the projector is turned off automatically to prevent the damage of optical components.

Replacing the Filter Cartridge

1. Turn off the projector, press the Main On/Off Switch to Off and unplug the AC power cord from the AC outlet.
2. First, clean up the dust on the projector and around the air vents.
3. Slide and open the Filter cover. (See the right figure.)
4. Pull out the filter cartridge by holding the finger grip.
5. Put the new one back into the position and close the filter cover. Make sure that the filter cartridge is properly and fully inserted.
6. Connect the AC power cord to the projector and turn on the projector.
7. **Reset the filter counter and the scroll counter** (p.59).

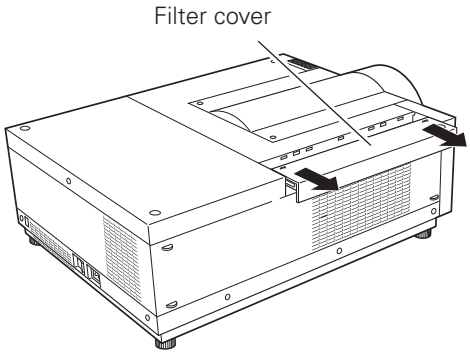

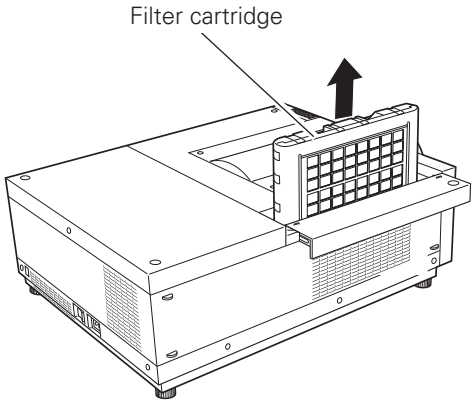

CAUTION
Make sure the filter cartridge is inserted in the projector. If the filter cartridge is not inserted, the projector cannot be turned on.
Do not put anything into the air vents. Doing so may result in malfunction of the projector.

RECOMMENDATION

We recommend avoiding dusty/smoky environments when operating the projector. Usage in these environments may cause a poor image quality.

When using the projector under dusty or smoky conditions, dust may accumulate on a lens, liquid crystal panels, or optical elements inside the projector. Such condition may degrade the quality of the projected image.
When the symptoms above are noticed, contact your authorized dealer or service station for proper cleaning.

ORDER REPLACEMENT FILTER CARTRIDGE

Replacement filter cartridge can be ordered through your dealer. When ordering, give the following information to the dealer.

- **Model No. of your projector**
  LC-X8K
- **Replacement Filter Cartridge**
  Service Parts Code: 610 335 9830

Resetting the Filter Counter

Be sure to reset the Filter counter after replacing the filter cartridge.

1 Press the MENU button to display the On-Screen Menu. Use the Point ◀▶ buttons to move the red frame pointer to the Setting Menu icon.

2 Use the Point ▲▼ buttons to move the red frame pointer to Filter counter and then press the SELECT button.
A dialog box appears showing the Used time option and the Scrolls remaining option. Use the Point ▲▼ buttons to select Used time.

3 Used time shows the total accumulated time of the filter use, a timer setting option, and the Reset option. Select Reset and the "Filter counter Reset?" appears. Select [Yes] to continue.

4 Another confirmation dialog box appears, select [Yes] to reset the Filter counter.

Filter counter

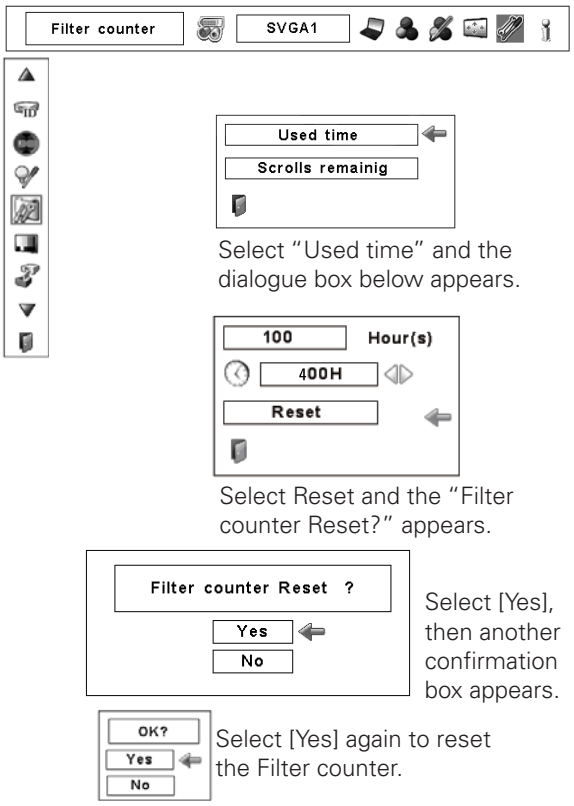

Resetting the Scroll Counter

Be sure to reset the Scroll counter after replacing the filter cartridge.

1 Press the MENU button to display the On-Screen Menu. Use the Point ◀▶ buttons to move the red frame pointer to the Setting Menu icon.

2 Use the Point ▲▼ buttons to move the red frame pointer to Filter counter and then press the SELECT button. A dialog box appears showing the Used time option and the Scrolls remaining option. Use the Point ▲▼ buttons to select Scroll(s) remaining.

3 Scroll(s) remaining shows the number of the remaining scrolls and the Reset option. Select Reset and the "Scroll counter Reset?" appears. Select [Yes] to continue.

4 Another confirmation dialog box appears, select [Yes] to reset the Scroll counter.

✔***Note:***
- While the scroll counter reset is in progress, "Please wait..." message appears on the screen, the cooling fans operate and the filter cartridge is adjusted.

Scroll counter

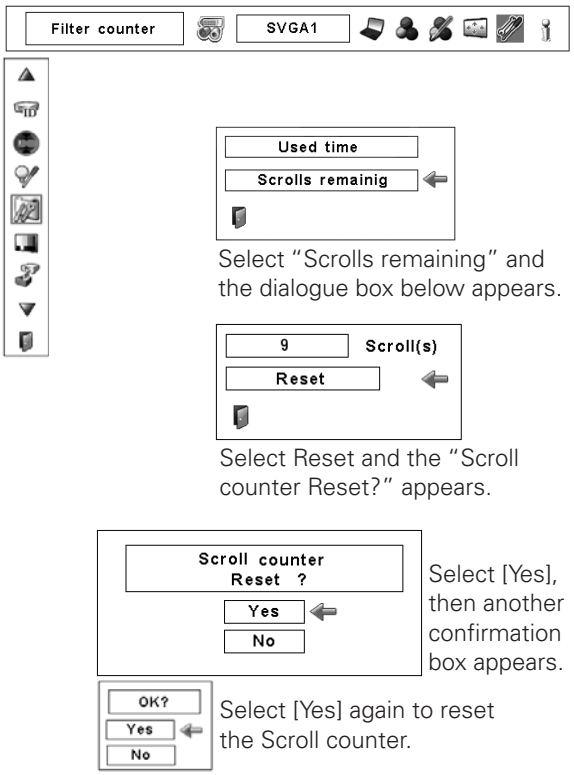

Lamp Management

This Projector is equipped with 2 Projection Lamps to ensure brighter image and those lamps are controlled by the Lamp Management Function. The Lamp Management Function detects the status of lamps and shows the status on screen or on the LAMP 1/2 REPLACE indicators. This function also automatically controls the Lamp Mode when any of lamps is out for the end of life or malfunctions.

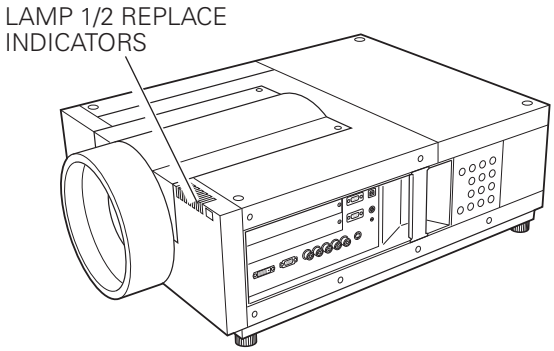

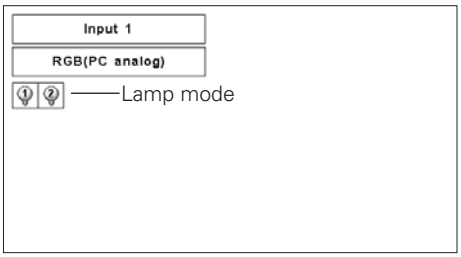

Lamp 1/2 Replace Indicators

The LAMP 1/2 REPLACE indicators light orange when any of Projection Lamps is nearing its end, and flash when any of them becomes out. Check the number of lamp on the Lamp Status Display or the LAMP 1/2 REPLACE indicators and replace the lamp.

Lamp Status Display

The Lamp Status Display appears on screen when the projector is turned on or the input position (input 1, input 2, Input 3 or input 4) is switched. This shows the status of each lamp as; ON, OFF, NEAR END, or OUT. Refer to the following for each status.

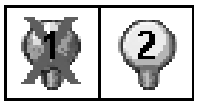

LAMP STATUS DISPLAY

Yellow Lamp – – – – – – – Projection Lamp lights normally.

Dim Lamp – – – – – – – – – Projection Lamp is turned off.

Red Lamp – – – – – – – – – Projection Lamp is nearing its end. When the image becomes darker or the color becomes unnatural, replace lamp. (LAMP 1/2 REPLACE indicator lights orange.)

X Mark on Lamp – – – – – (LAMP 1/2 REPLACE indicator flashes orange.) Projection lamp is defective or fails to be turned on. Restart the projector on, and make sure lamp is on. If this mark still appears, replace lamp corresponding with number marked X.

Lamp Mode Changeover

The Lamp Management Function automatically changes the lighting lamp (Lamp Mode) by detecting the status of lamp. When either of the 2 lamps is out, the projector operates with 1 lamp. The Lamp Mode can be switched to 2 lamps or 1 lamp manually. Refer to the SETTING section on page 51.

2 LAMP MODE

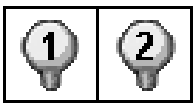

1 LAMP MODE

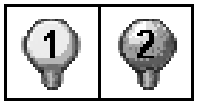

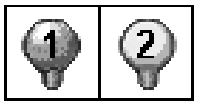

When Lamp 1 is burnt out.

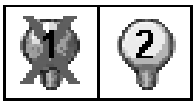

When Lamp 2 is burnt out.

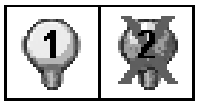

Lamp Replacement

When the projection lamp of the projector reaches its end of life, the Lamp replacement icon appears on the screen and LAMP 1/2 REPLACE indicator lights orange. Replace the lamp with a new one promptly. The timing when the LAMP 1/2 REPLACE indicators should light is depending on the lamp mode.

Indicators

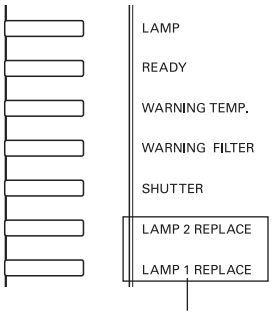

Lamp replacement icon

LAMP 1 / 2 REPLACE indicators

✔***Note:***
- The Lamp replacement icon will not appear when the Display function is set to "Off" (p.48), or during "Freeze" (p.29).

WARNING:

TURN OFF THE UV LAMP BEFORE OPENING THE LAMP COVER.

Allow the projector to cool, for at least 45 minutes before you open Lamp Cover. The inside of the projector can become very hot.

CAUTION

For continued safety, replace with a lamp assembly of the same type.
Do not drop the lamp assembly or touch a glass bulb! The glass can shatter and may cause injury.

Follow these steps to replace the lamp.

1. Check the number of lamp to be replaced on the Lamp Status Display.
2. Turn off the projector, press the Main On/Off Switch to Off and unplug the AC power cord from the AC outlet. Let the projector cool for at least 45 minutes.
3. Loosen a screw on the Lamp Cover. Slide and open the Lamp Cover until it makes a clicking sound. (See the right figure.)
4. Loosen two screws and pull out the Lamp to be replaced by grasping handle.
5. Replace the Lamp with a new one and tighten two screws. Make sure the Lamp is set properly.
6. Put the Lamp Cover back and tighten a screw.
7. Connect the AC Power Cord to the projector and turn on the projector.
8. Reset the Lamp Replacement Counter. (Refer to section "Resetting the Lamp Counter" on page 62.)

NOTE : Do not reset LAMP REPLACEMENT COUNTER when lamp is not replaced.

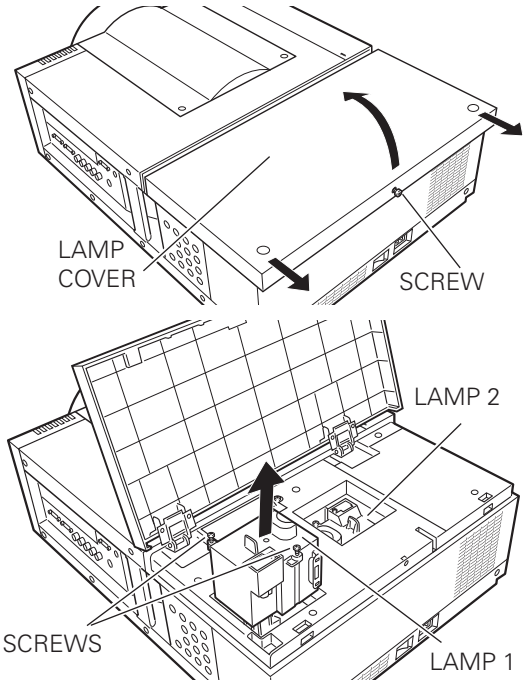

Make sure which number of lamp needs to be replaced on Lamp Status Display.
Figure shows case of replacing LAMP 1.

CAUTION : DO NOT OPERATE THE PROJECTOR WHILE ANY OF LAMPS IS REMOVED. IT MAY RESULT IN MALFUNCTIONS, FIRE HAZARD, OR OTHER ACCIDENTS.

NOTES ON LAMP REPLACEMENT

To maintain quality of picture (better balance of color and brightness in entire screen), we recommend replacing both 2 lamps at a time.

Resetting the Lamp Counter

Be sure to reset the Lamp counter after the lamp is replaced. When the Lamp counter is reset, the LAMP 1/2 REPLACE indicator stops lighting and the Lamp replacement icon disappears.

1 Press the MENU button to display the On-Screen Menu. Use the Point ◀▶ buttons to move the red frame pointer to the Setting Menu icon

2 Use the Point ▲▼ buttons to move the red frame pointer to Lamp counter and then press the SELECT button. A dialog box appears. Select a lamp and the "Lamp replacement counter Reset?" appears. Select [Yes] to continue.

3 Another confirmation dialog box appears and select [Yes] to reset the Lamp counter.

✔***Note:***

•Do not reset the Lamp counter without replacing the lamp. Be sure to reset the Lamp counter only after replacing the lamp.

Lamp counter

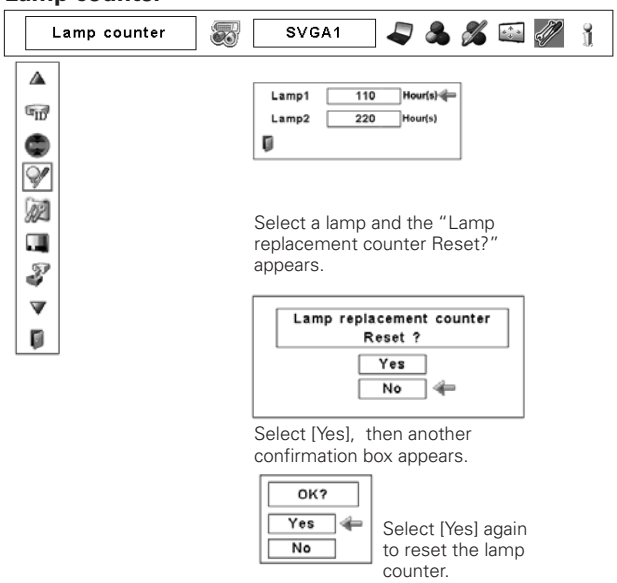

ORDER REPLACEMENT LAMP

Replacement Lamp can be ordered through your dealer. When ordering a Projection Lamp, give the following information to the dealer.

- **Model No. of your projector : LC-X8K**
- **Replacement Lamp Type No. : POA-LMP128**
  (Service Parts No. 610 341 9497)

⚠ LAMP HANDLING PRECAUTIONS

This projector uses a high-pressure lamp which must be handled carefully and properly.
Improper handling may result in accidents, injury, or create a fire hazard.

- Lamp lifetime may differ from lamp to lamp and according to the environment of use. There is no guarantee of the same lifetime for each lamp. Some lamps may fail or terminate their lifetime in a shorter period of time than other similar lamps.

- If the projector indicates that the lamp should be replaced, i.e., if the LAMP 1/2 REPLACE indicators light up, replace the lamp with a new one IMMEDIATELY after the projector has cooled down. (Follow carefully the instructions in the Lamp Replacement section of this manual.) Continuous use of the lamp with the LAMP 1/2 REPLACE indicators lighted may increase the risk of lamp explosion.

- Lamp may explode as a result of vibration, shock or degradation as a result of hours of use as its lifetime draws to an end. Risk of explosion may differ according to the environment or conditions in which the projector and lamp are being used.

IF A LAMP EXPLODES, THE FOLLOWING SAFETY PRECAUTIONS SHOULD BE TAKEN.

If a lamp explodes, disconnect the projector's AC plug from the AC outlet immediately. Contact an authorized service station for a checkup of the unit and replacement of the lamp. Additionally, check carefully to ensure that there are no broken shards or pieces of glass around the projector or coming out from the cooling air circulation holes. Any broken shards found should be cleaned up carefully. No one should check the inside of the projector except those who are authorized trained technicians and who are familiar with projector service. Inappropriate attempts to service the unit by anyone, especially those who are not appropriately trained to do so, may result in an accident or injury caused by pieces of broken glass.

Cleaning the Projection Lens

Turn off the projector, press the Main On/Off Switch to Off and unplug the AC power cord from the AC outlet before cleaning.

Gently wipe the projection lens with a cleaning cloth that contains a small amount of non-abrasive camera lens cleaner, or use a lens cleaning paper or commercially available air blower to clean the lens.

Avoid using an excessive amount of cleaner. Abrasive cleaners, solvents, or other harsh chemicals might scratch the surface of the lens.

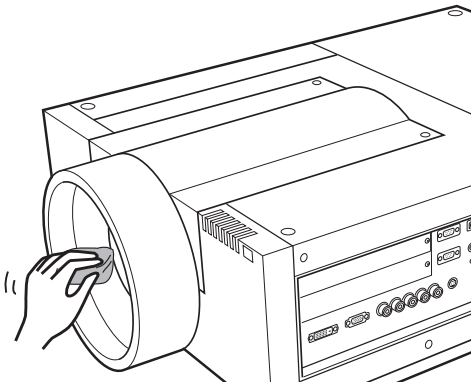

Cleaning the Projector Cabinet

Turn off the projector, press the Main On/Off Switch to Off and unplug the AC power cord from the AC outlet before cleaning.

Gently wipe the projector body with a soft dry cleaning cloth. When the cabinet is heavily soiled, use a small amount of mild detergent and finish with a soft dry cleaning cloth. Avoid using an excessive amount of cleaner. Abrasive cleaners, solvents, or other harsh chemicals might scratch the surface of the cabinet.

When the projector is not in use, put the projector in an appropriate carrying case to protect it from dust and scratches.

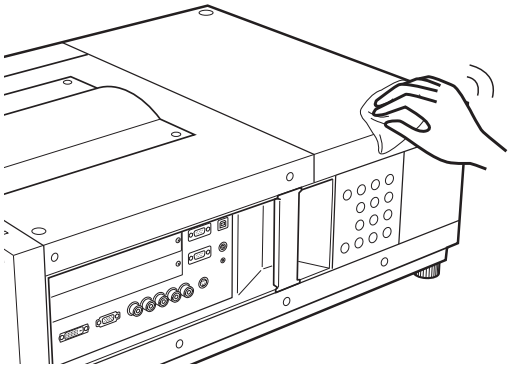

Warning Indicators

The WARNING indicators show the state of the function which protects the projector. Check the state of the WARNING TEMP. indicator and the LAMP indicator to take proper maintenance.

The projector is shut down and the WARNING TEMP. indicator is blinking red.

When the temperature inside the projector reaches a certain level, the projector will be automatically shut down to protect the inside of the projector. The LAMP indicator turns red brighter and the WARNING TEMP indicator blinks while the projector is being cooled down. When the projector has cooled down enough (to its normal operating temperature), it can be turned on again by pressing the ON/STAND-BY button.

✔ ***Note:***

- The WARNING TEMP. indicator continues to blink even after the temperature inside the projector returns to normal. When the projector is turned on again, the WARNING TEMP. indicator stops blinking.

Indicators

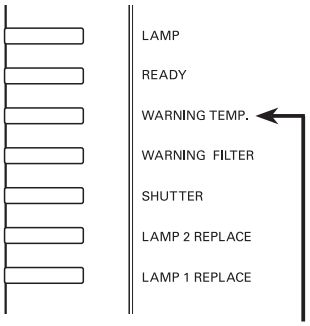

WARNING TEMP. blinking red

Then check the matters below:

– Did you provide appropriate space for the projector to be ventilated? Check the installing condition to see if the air vents of the projector are not blocked.
– Has the projector been installed near an Air-Conditioning/Heating Duct or Vent? Move the installation of the projector away from the duct or vent.
– Is the filter clean? Replace the filter with a new one.

The projector is shut down; and the LAMP indicator is lighting and other indicators are blinking.

When the projector detects an abnormal condition, it will be automatically shut down to protect the inside of the projector and the LAMP indicator lights on and other indicators blink. In this case, unplug the AC power cord and plug it, and then turn on the projector once again to verify operation. If the projector cannot be turned on and these indicators are still lighting and blinking, unplug the AC power cord and contact the service station.

Indicators

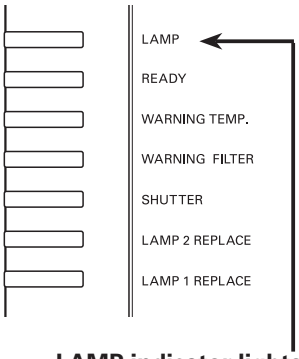

LAMP indicator lights on and other indicators blink.

CAUTION
DO NOT LEAVE THE PROJECTOR WITH THE AC POWER CORD CONNECTED UNDER AN ABNORMAL CONDITION. IT MAY RESULT IN FIRE OR ELECTRIC SHOCK.

Troubleshooting

Before calling your dealer or service center for assistance, check the items below once again.

1. Make sure you have properly connected the projector to peripheral equipment as described on pages 20–21.
2. Check the cable connection. Make sure that all computers, video equipment, and power cords are properly connected.
3. Make sure that all power is switched on.
4. If the projector still does not produce an image, restart your computer.
5. If an image still does not appear, disconnect the projector from your computer and check your computer monitor's display. A problem may be noticed with your graphics controller rather than with the projector. (When you reconnect the projector, be sure to turn the computer and monitor off before you turn on the projector. Turn on equipment in the order of the projector and computer.)
6. If a problem still persists, check the following solutions.

Problem:	Solutions
No power.	– Plug the power cord of the projector into the AC outlet. – Turn the MAIN ON/OFF switch to ON. – Press the ON/STAND-BY Button to ON. – Make sure the READY Indicator lights. – Check the indicators. If the LAMP indicator lights and the other indicators blink, the projector cannot be turned on. (Refer to page 65.) – Check the projection lamp. (Refer to page 61.)
PIN code dialog box appears at start-up.	–PIN code lock is being set. Enter a PIN code; the "1234" or numbers you have set (see pages 23, 53-54)
The initial display is not shown.	– Make sure "Off " or "Countdown Off" are not chosen at Display function. (See "SETTING" section on page 48)
The initial display is not same with the default one.	– Make sure "User" or "Off" are not chosen at Logo select function. (See "SETTING" section on page 49)
When the projector is on and you press the input button, an icon other than the Lamp mode icon appears.	– That is the Filter warning icon. Refer to page 56.
An icon other than Input mode or Lamp mode icon appears.	– That is the Lamp replacement icon or the Filter warning icon. See page 55-56.
No image.	– Check the connection between your computer or video equipment and the projector. – See if the input signal is correctly output from your computer. Some laptop computers may need to be changed the setting for monitor output when connected to the projector. See your computer's instruction manual for the setting. – It takes about 20 seconds to display an image after turning on the projector. – See if the selected system is corresponding with your computer or video equipment. – Select correct input source once again through menu operation (see pages 31, 41-42). – Make sure the temperature is not out of Operating Temperature (41˚F–104˚F [5˚C–40˚C]).

appears on the screen	– The end of lamp life is approaching. Replace the lamp with a new one promptly. (See page 55)
appears on the screen	–The filter is out of scroll. Replace the filter cartridge with a new one promptly. (See pages 57-58)
The image is out of focus.	– Adjust the focus of the projector. – Check Projection Lens to see if it needs cleaning. ✔***Note:*** Moving the projector from a cool temperature location to a warm temperature location may result in moisture condensation on Projection Lens. In such cases, leave the projector OFF and wait until condensation evaporates. – Projecting from excessive slant angle to the screen may cause keystone distortion and partial imperfect focus.
The image is not bright enough.	–Check if "Contrast" or "Brightness" are adjusted properly. (See page 45) –Check if "Image level" is selected properly. (See pages 38, 42) –Check the Lamp control function. (See "SETTING" section on page 51) – Check the Lamp 1/2 replace indicators. If it lights, the end of lamp life is approaching. Replace the lamp with a new one promptly. (See page 61) –The image is darker when 1 lamp mode is selected, compared with 2 lamp mode. Check the lamp mode at SETTING section on page 51.
The color is strange.	–Check the Input signal, color system, video system, or computer system mode.
The image is Left/Right reversed.	– Check the Ceiling / Rear function. (See pages 40, 44.)
The image is Top/Bottom reversed.	– Check the Ceiling function. (See pages 40, 44.)
The image is distorted or runs off.	–Check "PC Adjust" menu or " Screen" menu and adjust them.
Auto PC adjustment function does not work.	–Check the Input signal. Auto PC Adjustment function cannot work when 480p, 575p, 720p, 480i, 575i, 1035i, or 1080i is selected or when the digital signal is input into DVI terminal. (See page 35)
Some displays are not seen during the operation.	– Check the Display function (see page 48).
The setting does not remain after turning off power.	–Make sure you selected "Store" after adjusting settings. Some settings cannot be stored if not registered with "Store".
Power management function does not work.	–Power management function cannot work while "Freeze" function is running or the shutter is closed.
Image disappears automatically.	– Check the power management function in the Setting. The power management is set to "On" at the factory.
Capture function does not work.	–Check the connection to see if there is signal.
Some menus cannot be selected.	–Each of the Video Input and Computer Input has a limit on selectable menus.

The power is turned off automatically.	–Power management function runs by initial setting. Check "SETTING" section on page 52.
You cannot operate with the side control.	–The side control is not available If the side control is locked at "Key lock" under "Security" of SETTING section. Please check "SETTING" section on page 53.
The Remote Control does not work.	–Check the batteries. –Check if the RC sensor is set properly.(See page 52) –Make sure no obstruction is between the projector and remote control. –Make sure you are not too far from the projector when using the remote control. Maximum operating range is 16.4' (5m). –Make sure that the remote control code conforms to the projector's code. (See "SETTING" section on page 52.) –Make sure the reset switch in the compartment lid on back of the remote control is set to use position. –Unlock the Key lock function for the remote control. (See page 53) –Wireless remote control does not work when the remote control cable is connected to the projector. (See page 15)
Indicators blinks or lights.	–Check the status of the projector with referring to " INDICATORS AND PROJECTOR CONDITION" on pages 72-74.
appears on the screen	–Your operation is invalid. Operate correctly.
Unable to unlock the Logo PIN code lock, Security key lock or Security PIN code lock.	–Contact the dealer where you purchased the projector or the service center.
Forget the Logo PIN code or Security PIN code.	–Contact the dealer where you purchased the projector or the service center.

WARNING:
High voltages are used to operate this projector. Do not attempt to open the cabinet.

If problems still persist after following all operating instructions, contact the dealer where you purchased the projector or the service center. Specify the model number and explain about the problem. We will advise you how to obtain service.

This symbol on the nameplate means the product is Listed by Underwriters Laboratories Inc. It is designed and manufactured to meet rigid U.L. safety standards against risk of fire, casualty, and electrical hazards.

The CE Mark is a Directive conformity mark of the European Community (EC).

Menu Tree

Computer Input/Video Input

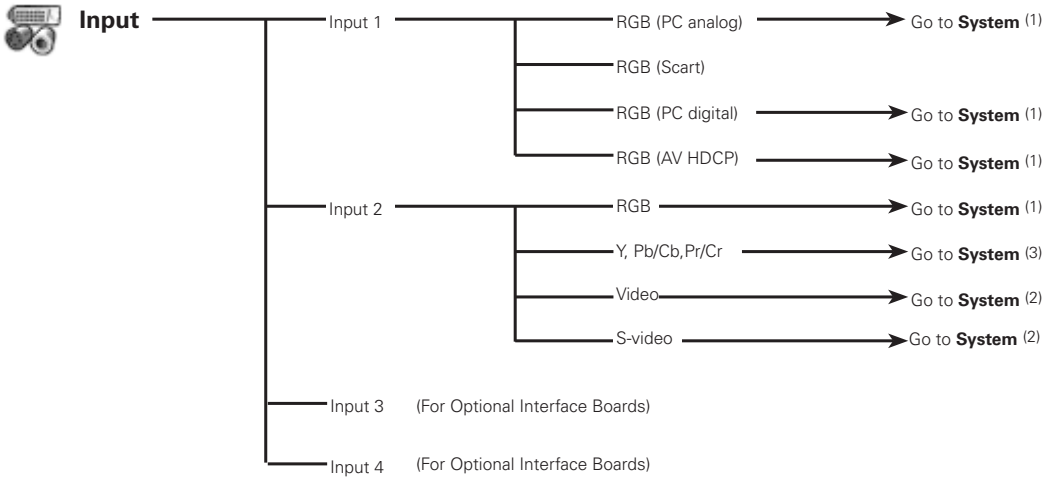

Information

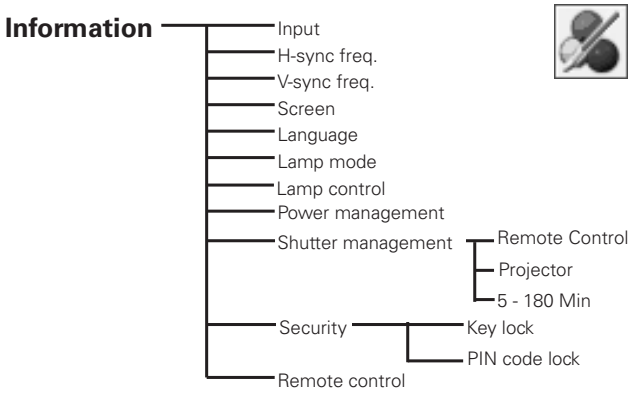

Image Adjust

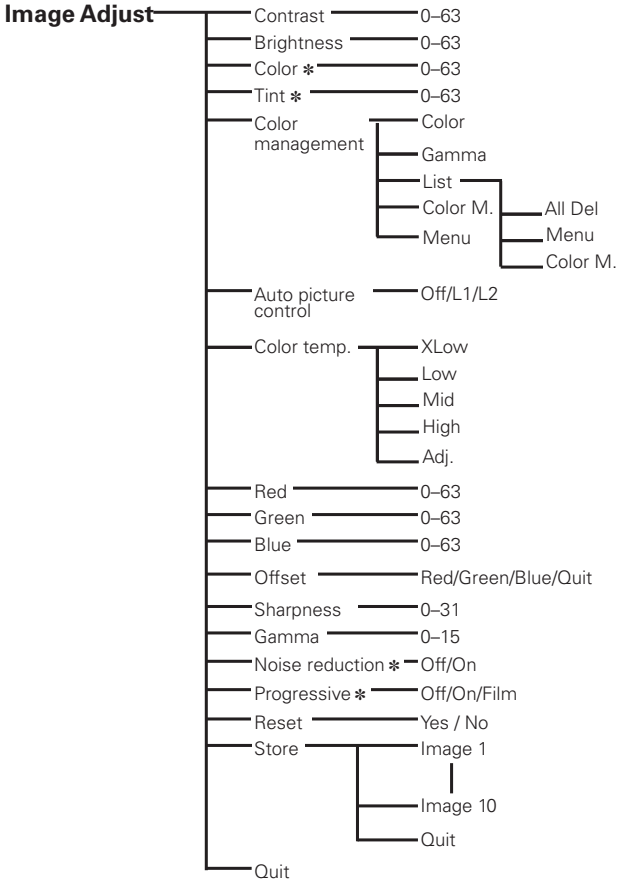

✻ Displayed in grayout in the computer Input.

✔ ***Note:***

- The Menu display varies depending on the input signal.

Computer Input

SVGA1

System (1)
- Mode 1
- Mode 2
- SVGA 1
- SVGA 2
- SVGA 3

Image Select
- Standard
- Real
- Image 1
- |
- Image 10

✻ System displayed in the System Menu varies depending on the input signal.

PC Adjust
- Auto PC adj.
- Fine sync. — 0–31
- Total dots
- Position H
- Position V
- Current mode
  - H-sync freq.
  - V-sync freq.
  - Quit
- Clamp
- Display area - H
- Display area - V
- Reset — Yes/No
- Mode free
- Store
  - Mode 1
  - |
  - Mode 10
  - Quit
- Quit

Screen
- Normal
- True
- Wide
- Full screen
- Custom
  - Scale — H / V
  - H & V — On/Off
  - Position — H / V
  - Common
  - Reset
  - Quit
- Digital zoom +
- Digital zoom -
- Keystone
  - Store
  - Reset
- Ceiling — On/Off
- Rear — On/Off
- Reset — Yes/No
- Quit

Video Input

Auto

System (2)
- Auto
- PAL
- SECAM
- NTSC
- NTSC 4.43
- PAL-M
- PAL-N

Auto

System (3)
- Auto
- 1080i
- 1035i
- 720p
- 575p
- 480p
- 575i
- 480i

Image Select
- Standard
- Cinema
- Image 1
- |
- Image 10

Screen
- Normal
- Wide
- Custom
  - Scale — H / V
  - H & V — On/Off
  - Position — H / V
  - Common
  - Reset
  - Quit
- Keystone
  - Store
  - Reset
- Ceiling — On/Off
- Rear — On/Off
- Reset — Yes/No
- Quit

✔ ***Note:***

•The Menu display varies depending on the input signal.

Computer Input/Video Input

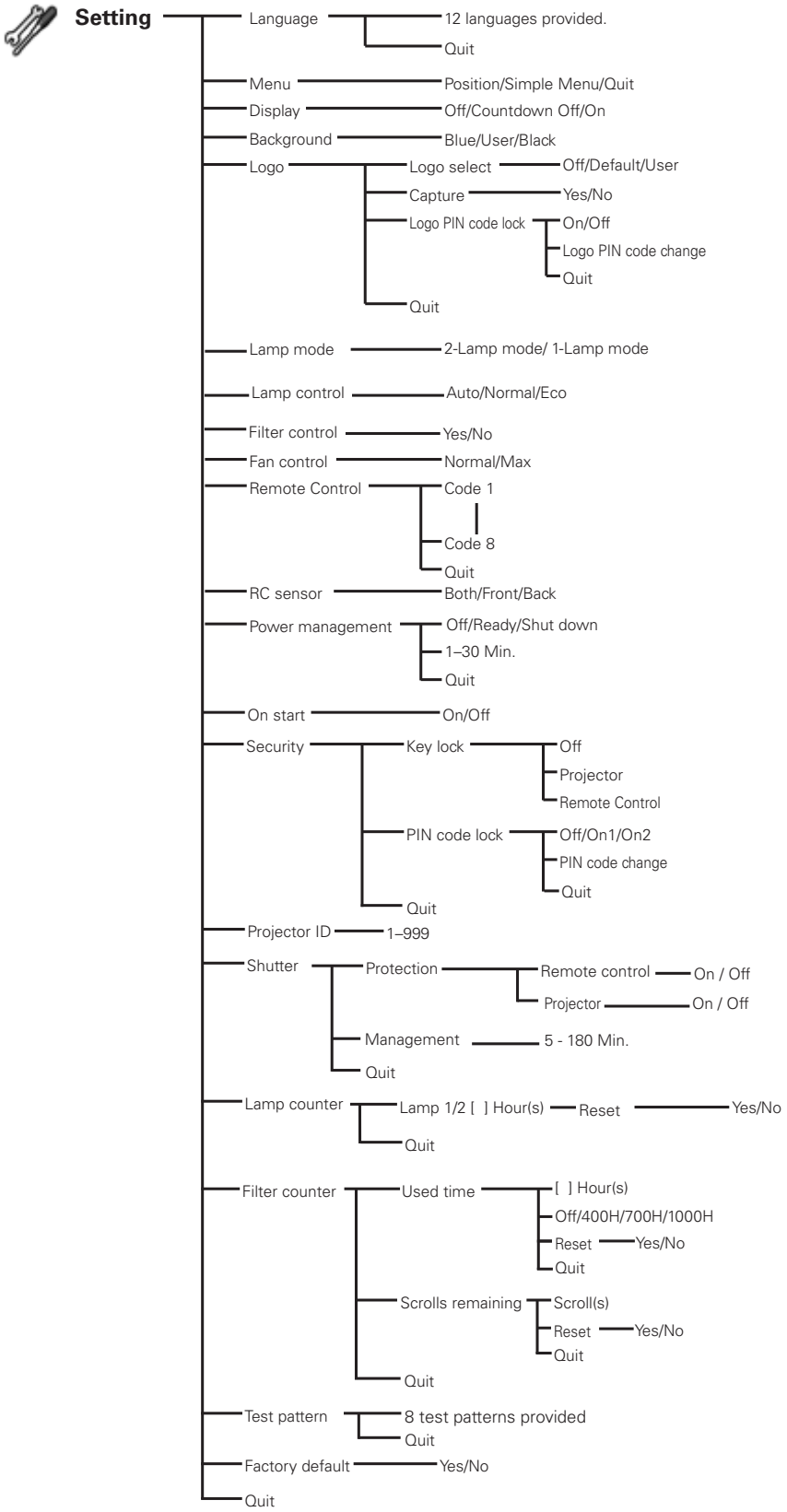

Indicators and Projector Condition

Check the indicators for the projector condition.

The projector is operating normally.

Indicators						Projector Condition
LAMP **red**	READY **green**	WARNING TEMP. **red**	WARNING FILTER **orange**	SHUTTER **blue**	LAMP 1/2 REP. **orange**	
●	●	●	●	●	●	The projector is off. (The main On/Off switch is OFF position or the AC power cord is unplugged.)
○	○	●	✻	✻	✻	The projector is in stand-by mode. Press the ON/STAND-BY button to turn on the projector.
◉	○	●	✻	●	✻	The projector is operating normally. (The Shutter is open)
◉	○	●	✻	○	✻	The projector is operating normally. (The Shutter is closed)
○	●	●	✻	✻	✻	The projector is preparing for stand-by or the projection lamp is being cooled down. The projector cannot be turned on until cooling is completed and the READY indicator lights green.
◉	●	●	✻	●	✻	The projection lamp is being cooled down in the Power management mode.
◉	⊘	●	✻	●	✻	The projector is in the Power management mode.
◉	●	●	✻	○	✻	The projection lamp is being cooled down in the Shutter management mode.
◉	○	●	✻	○	✻	The projector is in the Shutter management mode. Press the ON/STAND-BY button to turn on the projector.
◉	○	●	◎	✻	✻	The filter is scrolled using the FILTER button on the remote control or the Filter control function in the setting menu. When the filter is being scrolled, the Filter replacement icon and "Please wait..." message (Fig. 1) appear on the screen.

Fig.1 Filter replacement icon and "Please wait..."

○ • • • on

◉ • • • dim

● • • • off

○ • • • blinking at the normal rate (approx. 1 second ON, 1 second OFF)

⊘ • • • blinking fast (approx. 0.5 seconds ON, 0.5 seconds OFF)

◎ • • • blinking slow (approx. 2 seconds ON, 2 seconds OFF)

✻ • • • Differs according to conditions.

The projector is detecting abnormal condition.

Indicators						Projector Condition
LAMP **red**	READY **green**	WARNING TEMP. **red**	WARNING FILTER **orange**	SHUTTER **blue**	LAMP 1/2 REP. **orange**	
●	○	◎	*	*	*	The temperature inside the projector is elevated close to the abnormally high level.
○	●	⊘	*	*	*	The temperature inside the projector is abnormally high. The projector cannot be turned on. When the projector is cooled down enough and the temperature returns to normal, the READY indicator lights green and the projector can be turned on. (The WARNING TEMP. indicator keeps blinking.)
○	○	⊘	*	*	*	The projector has been cooled down enough and the temperature returns to normal. When turning on the projector, the WARNING TEMP. indicator stops blinking. Check and replace the filter.
○	●	●	*	*	○	The lamp cannot light up. (The projector is preparing for stand-by or the projection lamp is being cooled down. The projector cannot be turned on until cooling is completed.)
○	○	●	*	*	○	The lamp cannot light up. (The lamp has been cooled down enough and the projector is in stand-by mode and ready to be turned on with the ON/STAND-BY button.)
●	○	*	*	*	○	When either of the 2 lamps is out, the projector operates with 1 lamp.
*	*	*	*	*	○	The lamp has been used overtime. Replace the lamp immediately and then reset the lamp counter. The indicator will be turned off after resetting the counter.

WARNING FILTER

When the filter detects clogging, reaches a time set in the timer setting or runs out of the filter scroll, the WARNING FILTER indicator lights orange. When this indicator lights orange, replace the filter or the filter cartridge with a new one promptly. Reset the Filter counter and Scroll counter after replacing the filter cartridge (p.59).

LAMP REPLACE 1 and 2

When the LAMP 1 REPLACE indicator and the LAMP 2 REPLACE indicator light orange, replace the projection lamps with new ones promptly. And then reset the Lamp time after replacement of the lamps. See pages 55, 61, and 62.

The projector is detecting abnormal condition.

Indicators						Projector Condition
LAMP **red**	READY **green**	WARNING TEMP. **red**	WARNING FILTER **orange**	SHUTTER **blue**	LAMP 1/2 REP. **orange**	
●	○	●	○	*	*	If the Filter counter reached a time set in the timer setting, a Filter replacement icon (Fig.2) appears on the screen and the WARNING FILTER indicator on the top panel lights up. Replace the filter as soon as possible. If the filter is out of scroll and the projector reaches a time set in the timer setting, Fig. 3 appears on the screen and the WARNING FILTER indicator lights up. Replace the filter cartridge as soon as possible. If the filter is clogged and no scroll is left in the filter cartridge, a Filter cartridge replacement icon (Fig.4) appears on the screen and the WARNING FILTER indicator lights up. Replace the filter cartridge as soon as possible. ✔ ***Note:*** •Fig.2, Fig.3 and Fig.4 icon will not appear when the Display function is set to "Off" (p.48), or during "Freeze" (p.29).
●	○	●	⊘	*	*	The projector detects an abnormal condition during filter scroll.
○	●	●	⊘	*	*	The projector is being cooled down after detecting an abnormal condition during filter scroll.
○	○	●	⊘	*	*	The projector has been cooled down enough and is in the stand-by mode after detecting an abnormal condition during filter scroll.
○	⊘	⊘	⊘	⊘	⊘	The filter cartridge is not installed in the projector. Check the filter compartment to see if the filter cartridge is installed in the projector. When the filter cartridge is installed and the indicators continue to light and blink, read the column below.
						The projector detects an abnormal condition and cannot be turned on. Unplug the AC power cord and plug it again to turn on the projector. If the projector is turned off again, unplug the AC power cord and contact the dealer or the service center. Do not leave the projector on. It may cause an electric shock or a fire hazard.
*	*	*	*	⊘	*	The shutter is out of control.
○	●	●	*	⊘	*	The shutter is out of control. (The projector is in the cooling mode.)
○	○	●	*	⊘	*	The shutter is out of control. (The projector is in the stand-by mode.) In that case, contact the service station immediately.

Fig.2 Filter replacement icon

Fig.3

Fig.4 Filter cartridge replacement icon

Compatible Computer Specifications

Basically this projector can accept the signal from all computers with the V- and H-Frequency mentioned below and less than 230 MHz of Dot Clock.

PC Adjustment can be limited when these modes are selected.

ON-SCREEN DISPLAY	RESOLUTION	H-Freq.(kHz)	V-Freq.(Hz)
VGA 1	640x480	31.470	59.880
VGA 2	720x400	31.470	70.090
VGA 3	640x400	31.470	70.090
VGA 4	640x480	37.860	74.380
VGA 5	640x480	37.860	72.810
VGA 6	640x480	37.500	75.000
VGA 7	640x480	43.269	85.000
MAC LC13	640x480	34.970	66.600
MAC 13	640x480	35.000	66.670
480p	640x480	31.470	59.880
575p	768x575	31.250	50.000
575i	768x576 (Interlace)	15.625	50.000
480i	640x480 (Interlace)	15.734	60.000
SVGA 1	800x600	35.156	56.250
SVGA 2	800x600	37.880	60.320
SVGA 3	800x600	46.875	75.000
SVGA 4	800x600	53.674	85.060
SVGA 5	800x600	48.080	72.190
SVGA 6	800x600	37.900	61.030
SVGA 7	800x600	34.500	55.380
SVGA 8	800x600	38.000	60.510
SVGA 9	800x600	38.600	60.310
SVGA 10	800x600	32.700	51.090
SVGA 11	800x600	38.000	60.510
MAC 16	832x624	49.720	74.550
XGA 1	1024x768	48.360	60.000
XGA 2	1024x768	68.677	84.997
XGA 3	1024x768	60.023	75.030
XGA 4	1024x768	56.476	70.070
XGA 5	1024x768	60.310	74.920
XGA 6	1024x768	48.500	60.020
XGA 7	1024x768	44.000	54.580
XGA 8	1024x768	63.480	79.350
XGA 9	1024x768 (Interlace)	36.000	87.170
XGA 10	1024x768	62.040	77.070
XGA 11	1024x768	61.000	75.700
XGA 12	1024x768 (Interlace)	35.522	86.960
XGA 13	1024x768	46.900	58.200
XGA 14	1024x768	47.000	58.300
XGA 15	1024x768	58.030	72.000
MAC 19	1024x768	60.240	75.080
SXGA 1	1152x864	64.200	70.400
SXGA 2	1280x1024	62.500	58.600
SXGA 3	1280x1024	63.900	60.000
SXGA 4	1280x1024	63.340	59.980
SXGA 5	1280x1024	63.740	60.010

ON-SCREEN DISPLAY	RESOLUTION	H-Freq.(kHz)	V-Freq.(Hz)	
SXGA 6	1280x1024	71.690	67.190	
SXGA 7	1280x1024	81.130	76.107	
SXGA 8	1280x1024	63.980	60.020	
SXGA 9	1280x1024	79.976	75.025	
SXGA 10	1280x960	60.000	60.000	
SXGA 11	1152x900	61.200	65.200	
SXGA 12	1152x900	71.400	75.600	
SXGA 13	1280x1024 (Interlace)	50.000	86.000	
SXGA 14	1280x1024 (Interlace)	50.000	94.000	
SXGA 15	1280x1024	63.370	60.010	
SXGA 16	1280x1024	76.970	72.000	
SXGA 17	1152x900	61.850	66.000	
SXGA 18	1280x1024 (Interlace)	46.430	86.700	
SXGA 19	1280x1024	63.790	60.180	
SXGA 20	1280x1024	91.146	85.024	
SXGA+ 1	1400x1050	63.970	60.190	
SXGA+ 2	1400x1050	65.350	60.120	
SXGA+ 3	1400x1050	65.120	59.900	
SXGA+ 4	1400x1050	64.030	60.010	
SXGA+ 5	1400x1050	62.500	58.600	
MAC 21	1152x870	68.680	75.060	
MAC	1280x960	75.000	75.080	
MAC	1280x1024	80.000	75.080	
WXGA 1	1366x768	48.360	60.000	
WXGA 2	1360x768	47.700	60.000	
WXGA 3	1376x768	48.360	60.000	
WXGA 4	1360x768	56.160	72.000	
WXGA 6	1280x768	47.776	59.870	
WXGA 7	1280x768	60.289	74.893	
WXGA 8	1280x768	68.633	84.837	
WXGA 9	1280x800	49.600	60.050	
WXGA 10	1280x800	41.200	50.000	
WXGA 11	1280x800	49.702	59.810	
WUXGA 1	1920x1200	74.556	59.885	✻
WSXGA+ 1	1680x1050	65.290	59.954	
WXGA+ 1	1440x900	55.935	59.887	
UXGA 1	1600x1200	75.000	60.000	
UXGA 2	1600x1200	81.250	65.000	✻
UXGA 3	1600x1200	87.500	70.000	✻
UXGA 4	1600x1200	93.750	75.000	✻
UXGA 5	1600x1200	106.250	85.000	✻
720p	1280x720	45.000	60.000	
720p	1280x720	37.500	50.000	
1035i	1920x1035 (Interlace)	33.750	60.000	
1080i	1920x1080 (Interlace)	33.750	60.000	
	1920x1080 (Interlace)	28.125	50.000	

✻ "True" cannot be selected when WUXGA1, UXGA2, UXGA3, UXGA4 and UXGA5 are selected (p.39)

When an input signal is digital from the DVI terminal, refer to the chart below.

ON-SCREEN DISPLAY	RESOLUTION	H-Freq.(kHz)	V-Freq.(Hz)
D-VGA	640x480	31.470	59.940
D-480p	720x480	31.470	59.880
D-575p	720x575	31.250	50.000
D-SVGA	800x600	37.879	60.320
D-XGA	1024x768	43.363	60.000
D-WXGA 1	1366x768	48.360	60.000
D-WXGA 2	1360x768	47.700	60.000
D-WXGA 3	1376x768	48.360	60.000
D-WXGA 4	1360x768	56.160	72.000
D-WXGA 5	1366x768	46.500	50.000
D-WXGA 6	1280x768	47.776	59.870
D-WXGA 7	1280x768	60.289	74.893
D-WXGA 8	1280x768	68.633	84.837
D-WXGA 9	1280x800	49.600	60.050
D-WXGA 10	1280x800	41.200	50.000
D-WXGA 11	1280x800	49.702	59.810
D-SXGA 1	1280x1024	63.980	60.020
D-SXGA 2	1280x1024	60.276	58.069

ON-SCREEN DISPLAY	RESOLUTION	H-Freq.(kHz)	V-Freq.(Hz)
D-SXGA+ 1	1400x1050	63.970	60.190
D-SXGA+ 2	1400x1050	65.350	60.120
D-SXGA+ 3	1400x1050	65.120	59.900
D-WSXGA+ 1	1680x1050	65.290	59.954
D-WXGA+ 1	1440x900	55.935	59.887
D-720p	1280x720	45.000	60.000
D-720p	1280x720	37.500	50.000
D-1035i	1920x1035 (Interlace)	33.750	60.000
D-1080i	1920x1080 (Interlace)	33.750	60.000
	1920x1080 (Interlace)	28.125	50.000
D-1080psf/30	1920x1080	33.750	60.000
D-1080psf/25	1920x1080	28.125	50.000
D-1080psf/24	1920x1080	27.000	48.000

✔***Note:***

- Depending on the condition of signals and the type and length of cables, these signals may not be properly viewed.
- Specifications are subject to change without notice.

Technical Specifications

Mechanical Information

Projector Type	Multi-media Projector
Dimensions (W x H x D)	20.87" x 10.53" x 29.8" (530 mm x 267.5 mm x 757 mm)
Net Weight	60.85lbs (27.6 kg)
Feet Adjustment	0˚ to 2.8˚

Panel Resolution

LCD Panel System	1.8" TFT Active Matrix type, 3 panels
Panel Resolution	1,024 x 768 dots
Number of Pixels	2,359,296 (1,024 x 768 x 3 panels)

Signal Compatibility

Color System	PAL, SECAM, NTSC, NTSC4.43, PAL-M, and PAL-N
High Definition TV Signal	480i, 480p, 575i, 575p, 720p, 1035i, and 1080i
Scanning Frequency	H-sync. 15 kHz–120 kHz, V-sync. 48 Hz–120 Hz

Optical Information

Projection Lamp	330 W NSHA lamp x 2

Interface

Input 1	DVI-D Terminal (Digital), Mini D-Sub 15-pin Terminal (Analog)
Input 2	BNC Type x 5 (VIDEO/Y/G, B/Pb/Cb, R/Pr/Cr, H/HV and V), S-Video
Other Jacks	Serial port in (D-sub 9), Serial port out (D-sub 9), USB port, and Wired Remote Jack

Power

Voltage and Power Consumption	AC 100–120 V (11.2A Max. Ampere), 50/60 Hz (The U.S.A and Canada)
	AC 200-240 V (5.1A Max. Ampere), 50/60 Hz (Continental Europe and The U.K.)

Operating Environment

Operating Temperature	41˚F–104˚F (5˚C–40˚C)
Storage Temperature	14˚F–140˚F (-10˚C–60˚C)

Remote Control

Battery	AA or LR6 Type x 2
Operating Range	16.4' (5 m/±30˚)
Dimensions	1.79" (W) x 1.03" (H) x 6.24" (D) (45.5 mm x 26.2 mm x 158.5 mm)
Net Weight	4.1 oz (117 g) (including batteries)

Accessories

Owner's Manual (CD-ROM)
Quick Reference Guide
AC Power Cord
Remote Control and Batteries
VGA Cable
Remote Control cable
PIN Code Label
Lens Attachments (1 type) (For option lens)
Light Block Plates (3 types) (For option lens)
Spacer (For option lens)
Real Color Manager Pro (CD-ROM)
Mounting Clamp

- The specifications are subject to change without notice.
- LCD panels are manufactured to the highest possible standards. Even though 99.99% of the pixels are effective, a tiny fraction of the pixels (0.01% or less) may be ineffective by the characteristics of the LCD panels.
- Each projector has its own characteristics.
  When projecting with several projectors on the same screen or side by side, you may recognize different white balance and color uniformity on each projector.

Optional Parts

The parts listed below are optionally available. When ordering those parts, specify the item name and Model No. to the sales dealer.

	Model No.
Optional Interface Board (DVI)	**:** AH-72003
Optional Interface Board (5-BNC)	**:** AH-72015
Optional Interface Board (D-sub 15)	**:** AH-72031
Optional Interface Board (Dual-SDI)	**:** AH-72162
Optional Interface Board (Network board)	**:** AH-72142

Configurations of Terminals

ANALOG (Mini D-sub 15 pin)

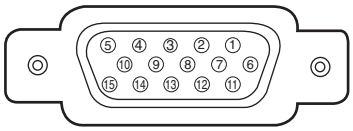

1	Red Input	9	+5V Power
2	Green Input	10	Ground (Vert. sync.)
3	Blue Input	11	Ground
4	No Connect	12	DDC Data
5	Ground (Horiz.sync.)	13	Horiz. sync.
6	Ground (Red)	14	Vert. sync.
7	Ground (Green)	15	DDC Clock
8	Ground (Blue)		

DIGITAL DVI-D (DVI 24 PIN)

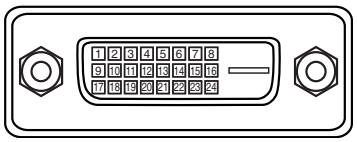

1	T.M.D.S. Data2–	9	T.M.D.S. Data1–	17	T.M.D.S. Data0–
2	T.M.D.S. Data2+	10	T.M.D.S. Data1+	18	T.M.D.S. Data0+
3	T.M.D.S. Data2 Shield	11	T.M.D.S. Data1 Shield	19	T.M.D.S. Data0 Shield
4	No Connect	12	No Connect	20	No Connect
5	No Connect	13	No Connect	21	No Connect
6	DDC Clock	14	+5V Power	22	T.M.D.S. Clock Shield
7	DDC Data	15	Ground (for +5V)	23	T.M.D.S. Clock+
8	No Connect	16	Hot Plug Detect	24	T.M.D.S. Clock–

USB CONNECTOR (Series B)

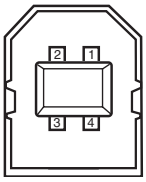

1	Vcc
2	- Data
3	+ Data
4	Ground

CONTROL PORT CONNECTOR (D-sub 9 pin)

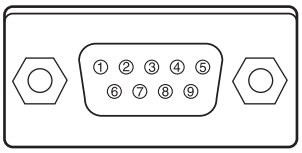

	Serial
1	-----
2	R X D
3	T X D
4	-----
5	SG
6	-----
7	RTS
8	CTS
9	-----

PIN Code Number Memo

Write down the PIN code number in the column below and keep it with this manual securely. If you forgot or lost the number and unable to operate the projector, contact the service station.

PIN Code Lock No.

Factory default set No: 1 2 3 4*

Logo PIN Code Lock No.

Factory default set No: 4 3 2 1*

*Should the four-digit number be changed, the factory set number will be invalid.

While the projector is locked with the PIN code...

Put the label below (supplied) on in a prominent place of the projector's body while it is locked with a PIN code.

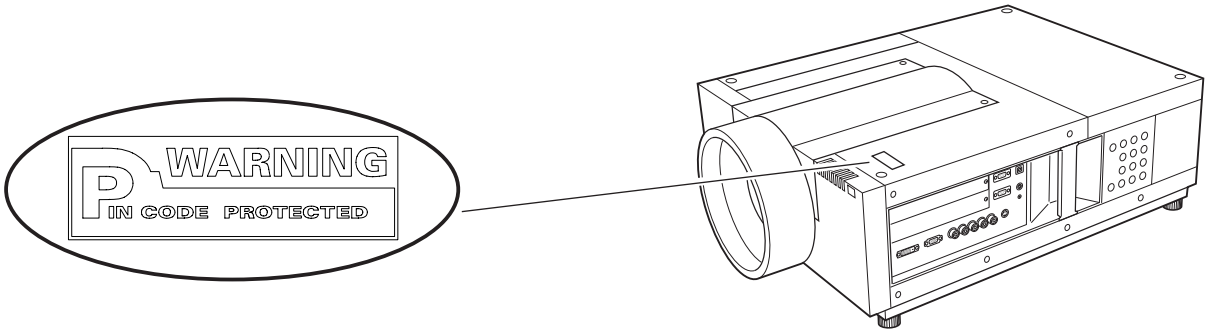

Dimensions

Unit: inch (mm)

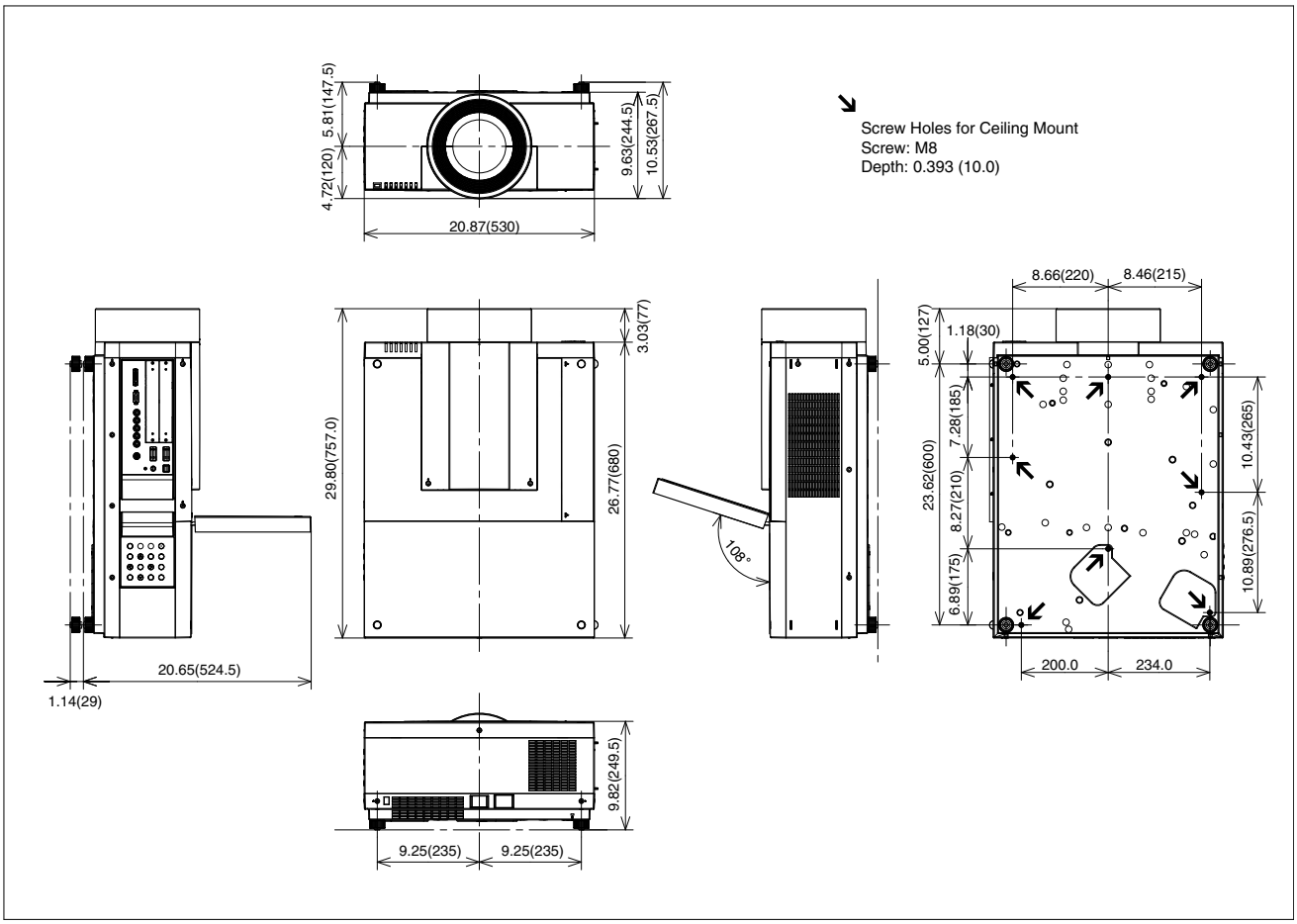

Serial Control Interface

This projector provides a function to control and monitor the projector's operations by using the RS-232C serial port.

Operation

1 Connect a RS-232C serial cross cable to SERIAL PORT IN on the projector and serial port on the PC. (See p.11)

2 Launch a communication software provided with PC and setup the communication condition as follows:

Baud rate	: 9600 / 19200 bps
Parity check	: none
Stop bit	: 1
Flow control	: none
Data bit	: 8

3 Type the command for controlling the projector and then enter the "Enter" key.

Example
When you want to change the input to INPUT 2,
Type 'C' '0' '6' 'Enter'.

✔ ***Note:***

- The default of the baud rate is set to 19200 bps. If an error occurs in the communication, change the serial port and the communication speed (baud rate).
- Enter with ASCII 64-byte capital characters and one-byte characters.

Functional Execution Command

Format

The command is sent from PC to the projector with the format below;
'C' [Command] 'CR'
Command: two characters (refer to the command table below.
-The projector decodes the command and returns the 'ACK' with the format below;
'ACK' 'CR'
-When the projector cannot decode the command, it returns with format below.
'?' 'CR'

Command	Function
C00	Turn the projector ON
C01	Turn the projector OFF (immediately OFF)
C05	Select Input 1
C06	Select Input 2
C07	Select Input 3
C08	Select Input 4
C0D	Video mute ON
C0E	Video mute OFF
C0F	Aspect 4:3
C10	Aspect 16:9
C1C	Menu ON
C1D	Menu OFF
C3A	Pointer RIGHT

Command	Function
C3B	Pointer LEFT
C3C	Pointer UP
C3D	Pointer DOWN
C3F	Enter
C46	Zoom DOWN
C47	Zoom UP
C4A	Focus DOWN
C4B	Focus UP
C5D	Lens shift UP
C5E	Lens shift DOWN
C5F	Lens shift LEFT
C60	Lens shift RIGHT
C89	Auto PC Adj.
C8E	Keystone UP
C8F	Keystone DOWN
C90	Keystone RIGHT
C91	Keystone LEFT

Status Read Command

Format

The command is sent from PC to the projector with the format below;

'CR' [Command] 'CR'

Command: one character (refer to the command table below.

The projector decodes the command and returns the 'Character string' with the format below;

Command	Function	Projector Return	Projector status
CR0	Status Read	00	Power On
		80	Stand-by mode
		40	Countdown
		20	Cooling down
		10	Power Malfunction
		28	Cooling down at the temperature anomaly
		02	Unable to receive the RC232C command.
		24	Cooling down at Power Management mode
		04	Power Management mode after Cooling down
		21	Cooling down after the projector is turned off when the lamps are out.
		81	Stand-by mode after Cooling down when the lamps are out.
		88	Stand-by mode after Cooling down at the temperature anomaly.
		2C	Cooling down when the projector is turned off by the shutter management function.
		8C	Stand-by mode after Cooling down by the shutter management function.
CR6	Temperature Read	S1 S2 S3	S1 = Temperature at Sensor 1 (˚C) S2 = Temperature at Sensor 2 (˚C) S3 = Temperature at Sensor 3 (˚C) (ex.) S1 = 12.3˚C, S2 = 23.4˚C, S3 = 34.5˚C –> The projector displays "12.3 23.4 34.5" (For each sensor, two digit and the tenth place numbers are displayed with a space between each temperature.)
		?	Communication failure

The tables on page 82 and 83 show the typical command lists for controlling the projector. Please consult your local dealer for further information of other commands.

EIKI

U.S.A.

EIKI International, Inc.
30251 Esperanza
Rancho Santa Margarita
CA 92688-2132
U.S.A.
Tel : 800-242-3454 (949)-457-0200
Fax : 800-457-3454 (949)-457-7878
E-Mail : usa@eiki.com

Canada

EIKI CANADA - Eiki International, Inc.
P.O. Box 156, 310 First St. - Unit 2,
Midland, ON, L4R 4K8, Canada
Tel : 800-563-3454 (705)-527-4084
Fax : 800-567-4069 (705)-527-4087
E-Mail : canada@eiki.com

Deutschland & Österreich

EIKI Deutschland GmbH
Am Frauwald 12
65510 Idstein
Deutschland
Tel : 06126-9371-0
Fax : 06126-9371-14
E-Mail : info@eiki.de

Eastern Europe

EIKI CZECH SPOL. s.r.o.
Nad Cementárnou 1163/4a
Paraha 4, Podolí
147 00
Czech Republic
Tel : +42 02 4141 0928
+42 02 4140 3095
Fax: +42 02 4140 9435
E-Mail : easterneurope@eiki.de

China

EIKI (Shanghai) Co., Ltd.
1. Dapu Road,
Golden Magnolia Plaza
#2109 Shanghai,
200023 China
Tel : 86-21-5396-0088
Fax : 86-21-5396-0318
E-mail : info@eiki-china.com

South East Asia

EIKI Industrial (M) Sdn Bhd
No. 3A-2C, 4th Floor, Jalan PJU 8/3A,
Perdana Business Centre,
Bandar Damansara Perdana,
47820 Petaling Jaya, Selangor
Malaysia
Tel : +603-7722-4362
Fax : +603-7722-4392
E-Mail : sales@eiki.my

Japan & Worldwide

EIKI Industrial Company Limited.
4-12 Banzai-Cho, Kita-Ku, Osaka,
530-0028 Japan
Tel : +81-6-6311-9479
Fax : +81-6-6311-8486

WorldWide Website http://www.eiki.com

© 2008 Eiki International, Inc.