USA's primary source for projector lamps
myprojectorlamps

PROJECTOR OWNER'S MANUAL

Eiki

LC-X2U

Need a replacement lamp for this projector?

www.myprojectorlamps.com

Original manufacturer manual, provided unmodified as a courtesy of MyProjectorLamps.com.
All trademarks belong to their respective owners.

EIKI

MULTIMEDIA PROJECTOR

MODEL LC-X2U
LC-X2UL (Without Lens)

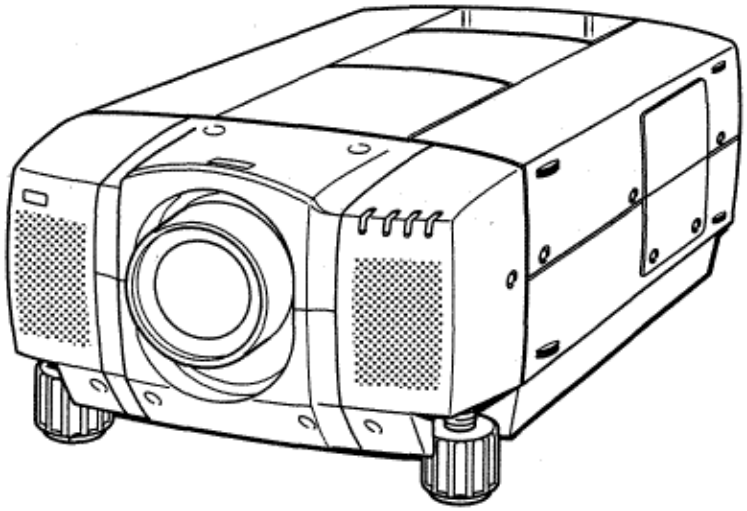

OWNER'S INSTRUCTION MANUAL

INFORMATION TO THE USER

NOTE: This equipment has been tested and found to comply with the limits for a Class A digital device, pursuant to Part 15 of FCC Rules. These limits are designed to provide reasonable protection against harmful interference when the equipment is operated in a commercial environment. This equipment generates, uses, and can radiate radio frequency energy and, if not installed and used in accordance with the owner's manual, may cause harmful interference to radio communications. Operation of this equipment in a residential area is likely to cause harmful interference in which case the user will be required to correct the interference at his own expense.

SAFETY PRECAUTIONS

WARNING:
TO REDUCE THE RISK OF FIRE OR ELECTRIC SHOCK, DO NOT EXPOSE THIS APPLIANCE TO RAIN OR MOISTURE.

This Projector has a grounding-type AC line plug. This is a safety feature to be sure that the plug will fit into the

power outlet. Do not try to defeat this safety feature.

Intense light source. Do not stare directly into the projection lens as possible eye damage could result.

Be especially careful that children do not stare directly into the beam.

The Remote Control Unit, supplied to this projector, emits the laser beam as the Laser Pointer function from the Laser Light Window while pressing the LASER button. Do not look into the Laser Light Window or shine the laser beam on yourself or other people. Eye damage may result.

If the Projector will not be used for an extended time, unplug the new Projector from the power outlet. This Projector should be set in the way indicated. Never hang the projector, or fall down on its side. It may result in fire hazard.

READ AND KEEP THIS OWNER'S MANUAL FOR LATER USE.

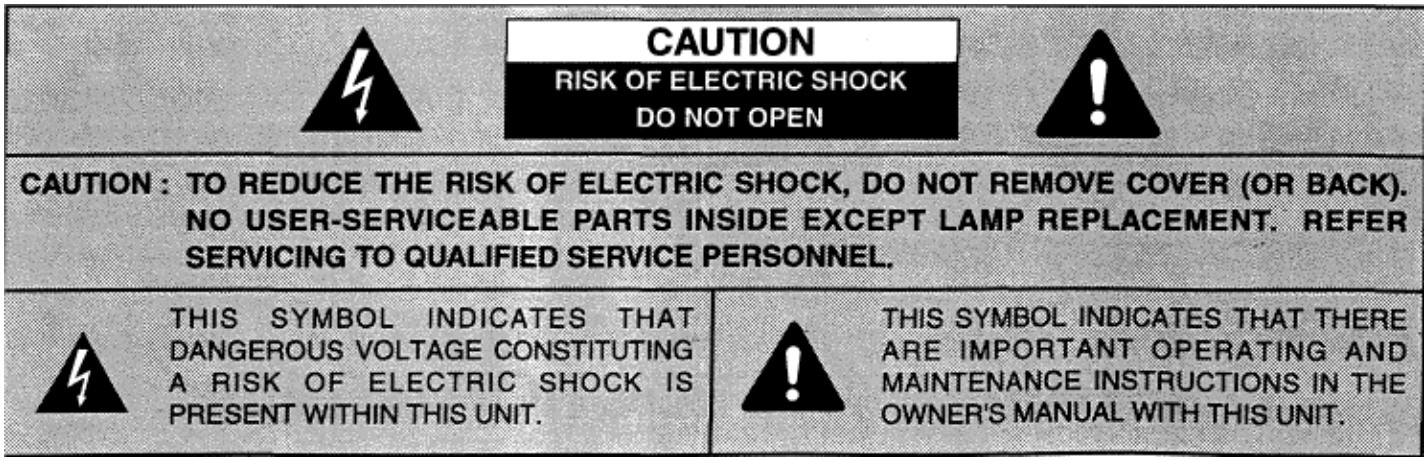

IMPORTANT:

For your protection in the event of theft or loss of this LC Data-Grade projector, please record the Model Number and Serial Number located on the rear of unit and retain this information. Refer to these numbers whenever you call upon your authorized dealer regarding this product.

Model No: LC-X2U/X2UL

Serial No•_____

Do not discard shipping carton and packing materials.
These items may be needed for storage or future servicing.

IMPORTANT SAFETY INSTRUCTIONS

All the safety and operating instructions should be read before the product is operated.

Read all of the instructions given here and retain them for later use. Unplug this projector from AC power supply before cleaning. Do not use liquid or aerosol cleaners. Use a damp cloth for cleaning.

Do not use attachments not recommended by the manufacturer as they may cause hazards.

Do not place this projector on an unstable cart, stand, or table. The projector may fall, causing serious injury to a child or adult, and serious damage to the projector. Use only with a cart or stand recommended by the manufacturer, or sold with the projector. Wall or shelf mounting should follow the manufacturer's instructions, and should use a mounting kit approved by the manufacturer.

Do not expose this unit to rain or use near water... for example, in a wet basement, near a swimming pool, etc...

Slots and openings in the back and bottom of the cabinet are provided for ventilation, to insure reliable operation of the equipment and to protect it from overheating.

The openings should never be covered with cloth or other material, and the bottom opening should not be blocked by placing the projector on a bed, sofa, rug, or other similar surface This projector should never be placed near or r a radiator or heat register.

This projector should not be placed in a built-in installation such as a bookcase unless proper ventilation is provided.

This projector should be operated only from the type of power source indicated on the marking label. If you are not sure of the type of power supplied, consult your authorized dealer or local power company.

Do not overload wall outlets and extension cords as this can result in fire or electric shock. Do not allow anything to rest on the power cord. Do not locate this projector where the cord will be abused by persons walking on it.

Never push objects of any kind into this projector through cabinet slots as they may touch dangerous voltage points or short out parts that could result in a fire or electric shock. Never spill liquid of any kind on the projector.

Do not attempt to service this projector yourself as opening or removing covers may expose you to dangerous voltage or other hazards. Refer all servicing to qualified service personnel.
Unplug this projector from wall outlet and refer servicing to qualified service personnel under the following conditions:

a. When the power cord or plug is damaged or frayed.
b. If liquid has been spilled into the projector.
c. If the projector has been exposed to rain or water.
d. If the projector does not operate normally by following the operating instructions. Adjust only those controls that are covered by the operating instructions as improper adjustment of other controls may result in damage and will often require extensive work by a qualified technician to restore the projector to normal operation.
e. If the projector has been dropped or the cabinet has been damaged.
f. When the projector exhibits a distinct change in performance-this indicates a need for service.

When replacement parts are required, be sure the service technician has used replacement parts specified by the manufacturer that have the same characteristics as the original part. Unauthorized substitutions may result in fire, electric shock, or injury to persons.

Upon completion of any service or repairs to this projector, ask the service technician to perform routine safety checks to determine that the projector is in safe operating condition.

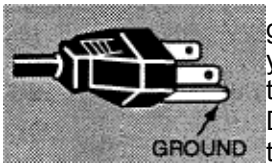

This projector is equipped with a grounding type AC line plug. Should you be unable to insert the plug into the outlet, contact your electrician. Do not defeat the safety purpose of this grounding type plug.

Follow all warnings and instructions marked on the projectors.

For added protection to the projector during a lightning storm, or when it is left unattended and unused for long periods of time, unplug it from the wall outlet. This will prevent damage due to lightning and powerline surges.

An appliance and cart combination should be moved with care. Quick stops, excessive force, and uneven surfaces may cause the appliance and cart combination to overturn.

If the projector is to be built into a compartment or similarly enclosed, the minimum distances must be maintained.
Do not cover the ventilation slot on the projector.
Heat build-up can reduce the service life of your projector, and can also be dangerous.

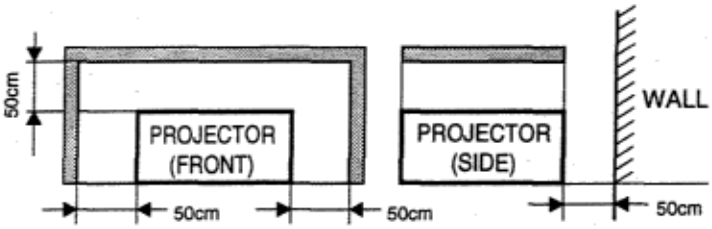

TABLE OF CONTENTS

	PAGE
FEATURES AND DESIGN	**5**
INTRODUCTION	5
COMPATIBILITY	5
IMAGE RESOLUTION	5
AUTOMATIC MULTISCANNING SYSTEM	5
SCREEN MODE	5
MULTILANGUAGE	5
UNPACKING THE PROJECTOR	5
TRADEMARKS	5
INSTALLATION	**6-9**
NAME OF EACH PART OF THE PROJECTOR	6
SETTING-UP THE PROJECTOR	7
MOVING THE PROJECTOR	8
POWER REQUIREMENTS	9
CONNECTING THE PROJECTOR	**10-21**
TERMINAL OF THE PROJECTOR	10-11
CONNECTING THE COMPUTER	12-19
CONNECTING THE VIDEO EQUIPMENT	20-21
BEFORE OPERATION	22-31
CONTROLS AND INDICATOR	22-23
OPERATION OF THE REMOTE CONTROL	24-28
WIRELESS REMOTE CONTROL UNIT	24-26
WIRELESS REMOTE CONTROL UNIT	27-28
CONTROL THE PROJECTOR	29-31
DIRECT OPERATION	29
MENU OPERATION	30-31
BASIC OPERATION	**32-51**
TURNING ON/OFF THE PROJECTOR	32
DIRECT OPERATION	33-34
MODE SELECT	33
SOUND VOLUME ADJUSTMENT	33
SOUND MUTE FUNCTION	33
ZOOM ADJUSTMENT	33
FOCUS ADJUSTMENT	33
LENS SHIFT ADJUSTMENT	33
DIGITAL ZOOM FUNCTION	34
NORMAL PICTURE FUNCTION	34
FREEZE PICTURE FUNCTION	34
NO SHOW FUNCTION	34
	PAGE
P-TIMER FUNCTION	34
AUTO IMAGE FUNCTION	34
CURSOR FUNCTION	34
MENU OPERATION	35-36
MODE SELECT	35
SOUND ADJUSTMENT	36
LANGUAGE ADJUSTMENT	36
VIDEO MODE	**37-39**
COLOR SYSTEM SELECT	37
VIDEO SOURCE SELECT	37
PICTURE IMAGE ADJUSTMENT	38
PICTURE SCREEN ADJUSTMENT	39
COMPUTER MODE	**40-49**
COMPUTER SYSTEM SELECT	40
COMPATIBLE COMPUTER SPECIFICATIONS	41
AUTO IMAGE FUNCTION	42
PICTURE IMAGE ADJUSTMENT	43
PICTURE POSITION ADJUSTMENT	44
PC ADJUSTMENT	45-48
PICTURE SCREEN ADJUSTMENT	49
OTHER FUNCTION SETTING	**50-52**
BLUE BACK	50-51
DISPLAY	50-51
REVERSE T/B	50-51
REVERSE L/R	50-51
SPLIT WIPE	50-51
POWER MANAGEMENT	50-51
USB (Mouse or Control)	50-51
REMOTE CONTROL (Mode 1 or Mode 2)	50-51
LAMP AGE	52
APPENDIX	**53-57**
MAINTENANCE	53..55
TEMPERATURE WARNING INDICATOR	53
AIR FILTER CARE AND CLEANING	53
LAMP REPLACEMENT	54
CLEANING THE LENS	55
TROUBLESHOOTING	55-56
TECHNICAL SPECIFICATIONS	57

FEATURES AND DESIGN

INTRODUCTION

The multimedia projector that combinesx powertul and sophisticated teatures with easy-to-use, intuitive controls. Built-in multimedia features include audio, a palette of 16.77 million colors and active matrix liquid crystal display (LCD) technology. The projector is ideal for high-performance business, training and imaging applications that demand exceptional color quality.

COMPATIBILITY

The projector is compatible with many different types of personal computers and video devices, including:

- IBM-compatible computers, including laptops, up to 1280 x 1024 resolution.
- Apple Macintosh and PowerBook computers up to 1280 x 1024 resolution.
- Various VCRs, video disc players, video cameras, DVD players, satellite TV tuners or other AV equipment using any of the worldwide video standards, including NTSC, NTSC4.43, PAL, PAL-M, PAL-N and SECAM.

IMAGE RESOLUTION

The resolution of the projector's projected image is 1024 x 768. The projector displays computer images just as they appear on your computer's monitor. Screen resolutions between 1024 x 768 and 1280 x 1024 are compressed to 1024 x 768. The projector cannot display screen resolutions above 1280 x 1024. If your computer's screen resolution is higher than 1280 x 1024, reset it to a lower resolution before you connect the projector.

AUTOMATIC MULTISCANNING SYSTEM

This projector can detect display signals from most personal computers currently distributed. It is free from complicated adjustments to project picture images from PC.

SCREEN MODE

Screen display can be selected among;

Computer mode	True, Digital zoom (Expand, Compress, Panning)
Video mode	Regular (4:3), Wide (16:9)

MULTILANGUAGE

MENU DISPLAY is displayed with; English, German, French, Italian, Spanish and Japanese.

UNPACKING THE PROJECTOR

The projector comes with the parts listed below. Check to find all the parts are included. If any parts are missing, contact an authorized dealer or service station.

- Owner's Manual.
- Wireless Remote Control Unit.
- Remote Control Cable.
- VGA Cable.
- Mouse Cable for serial port.
- VGA/MAC Adapter.
- Lens Cover.
- AC Power Cord.
- Wireless/Wired Remote Control Unit.
- Batteries for Remote Control Units.
- Mouse Cable for PS/2 port.
- Mouse Cable for ADB port.
- Protective Dust Cover

TRADEMARKS

- Apple, Macintosh, and PowerBook are trademarks or registered trademarks of Apple Computer, Inc.
- IBM and PS/2 are trademarks or registered trademarks of International Business Machines, Inc.
- Windows is a trademarks or registered trademarks of Microsoft Corporation.)ther trademarks are the property of their respective owners.

NAME OF EACH PART OF THE PROJECTOR

FRONT OF THE PROJECTOR

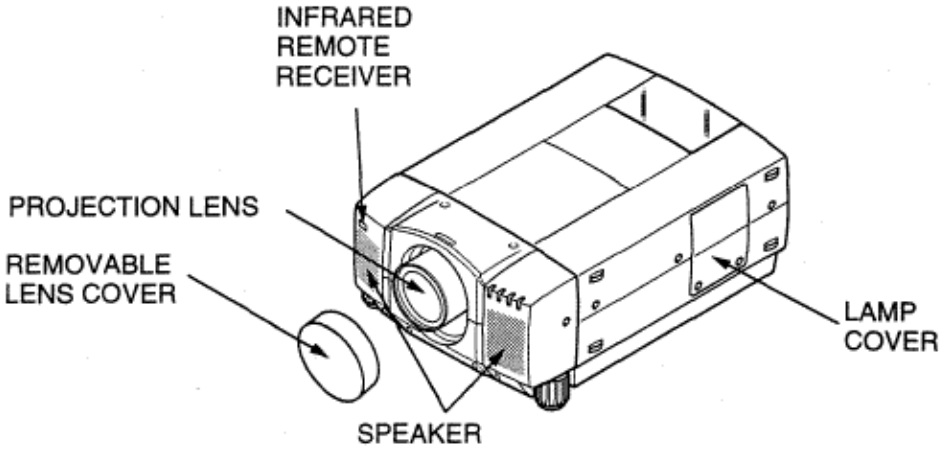

REAR OF THE PROJECTOR

EXHAUST VENT

CAUTION HOT AIR!
Air blown from the exhaust vent is hot.
Observe the following when handling your projector or choosing a location to install it.

- Keep heat-sensitive objects away from the exhaust port.
- If you set the projector on top of a metallic surface, the surface will become hot because of the hot air exhaust. Be careful when handling.
- Do not touch the cabinet near to the exhaust vent area, and especially screws and metallic parts. These parts will become hot while the projector is used.

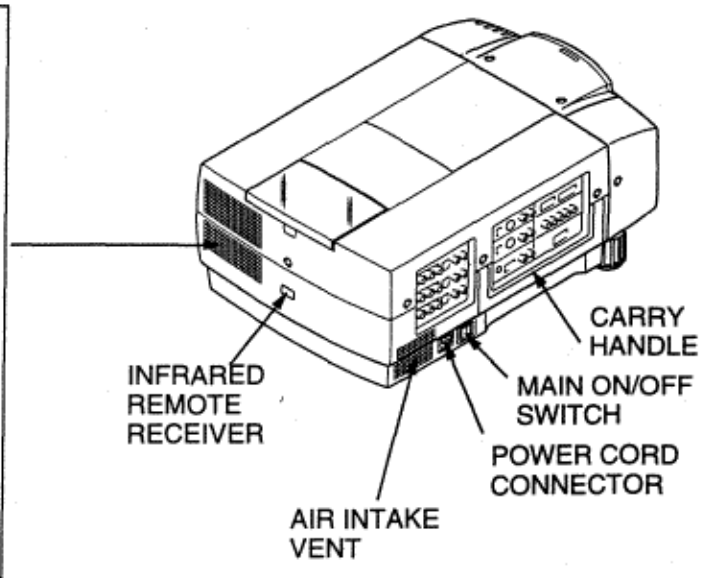

BOTTOM OF THE PROJECTOR

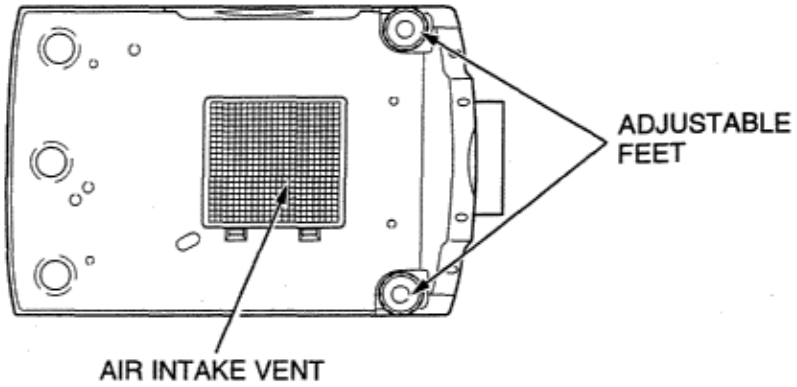

SETTING-UP THE PROJECTOR

POSITIONING:

- This projector is basically designed to project on a flat projection surface.
- This projector can be focused from 4.9' (1.5 m) ~ 80.7' (24.6 m).
- Refer to the figure below as an example when positioning the projector to the screen.

THIS PROJECTOR SHOULD BE SET IN THE WAY INDICATED. NEVER HANG THE PROJECTOR, OR FALL DOWN ON ITS SIDE. IT MAY RESULT IN FIRE HAZARD.

ROOM LIGHT

The projector should be placed in a room with limited light. Picture quality will be directly affected by lightning conditions.

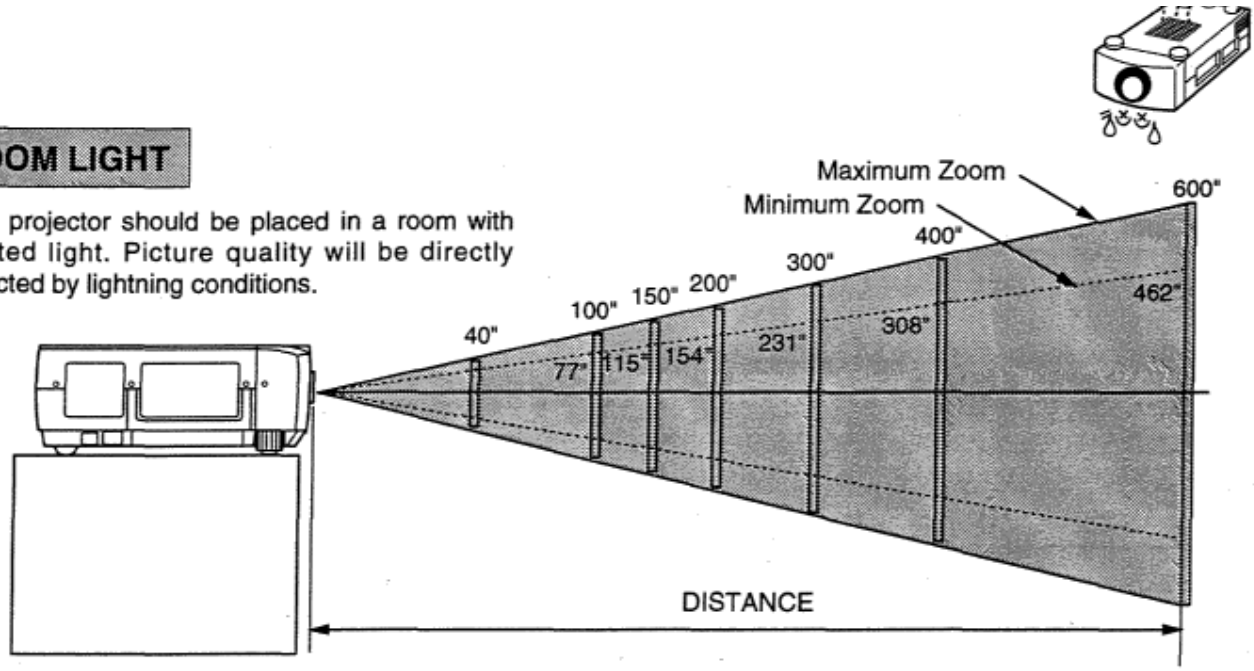

Screen Size	Max. Zoom	40"	100"	150"	200"	300"	400"	600"
	Min. Zoom	----------	77"	115"	154"	231"	308"	462"
Distance		4.9' (1.5 m)	13.1' (4.0 m)	20' (6.1 m)	26.9' (8.2 m)	40' (12.2 m)	53.8' (16.4 m)	80.7' (24.6 m)

ADJUSTABLE FEET

Picture tilt and projection angle can be adjusted by twisting ADJUSTABLE FEET. Projection angle can be adjusted up to 4 degrees by rotating Adjustable Feet.

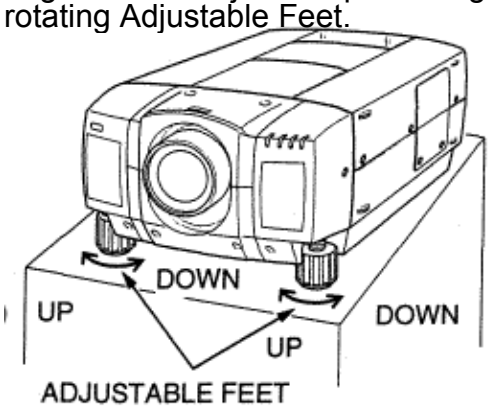

MOVE THE PROJECTED IMAGE POSITION

Adjust the projected image (maximum 760 mm downward or upward on the 100" screen) by using lens shift function. (see page 33.)

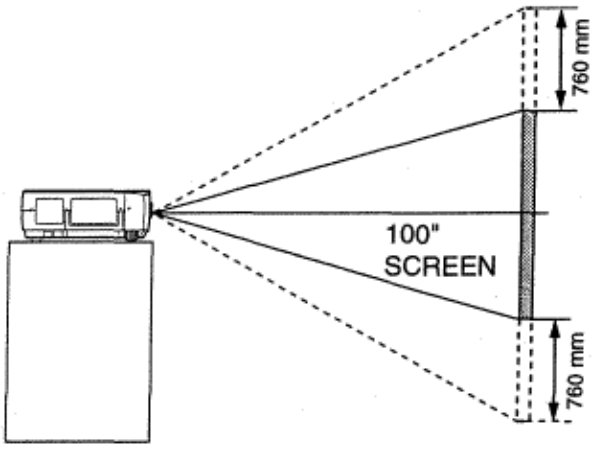

VENTILATION

This projector is equipped with a cooling fan to protect it from overheating. Pay attention to the following to ensure the ventilation and avoid a possible risk of fire and malfunction.

- •Do not cover the vents with papers or other materials.
- •Keep the rear grill at least 3.3' (1 m) away from any object.
- •Make sure that there are no objects under the projector. An object under the projector may prevent the projector from taking the cooling air through the bottom vent.

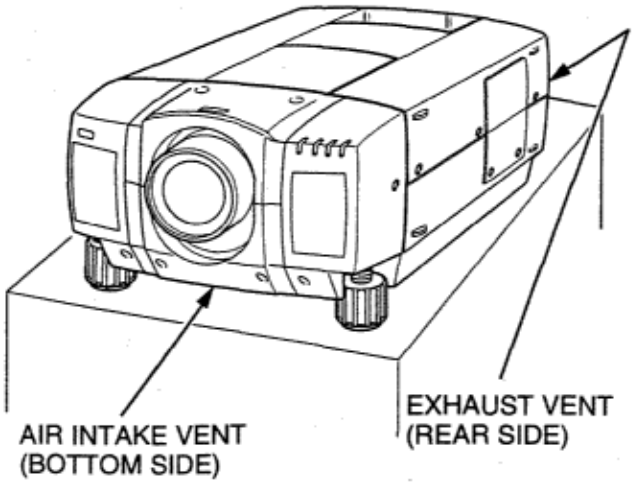

MOVING THE PROJECTOR

Use the carry handle when moving the projector. Replace the lens cover and rotate the adjustable feet fully clockwise.

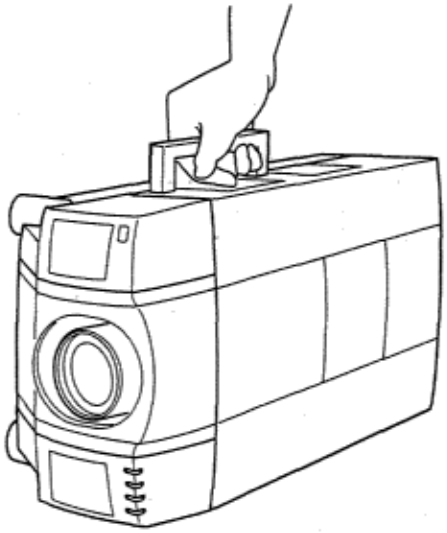

CAUTION IN CARRYING OR TRANSPORTING THE PROJECTOR

- Do not drop or give a shock to the projector, otherwise damage or malfunction may result.
- When carrying the projector, use a Eiki recommended Carrying Case.
- Do not transport the projector by using a courier or transport service in an unsuitable transport case. This may cause damage to the projector. To transport the projector through a courier or transport service, use a Eiki recommended Case.
- For a carrying or transportation cases, contact a Eiki authorized dealer.

POWER REQUIREMENTS

Your projector uses nominal input voltages of 100-120 VAC. The projector automatically selects the correct input voltage. The projector is designed to work with single-phase power systems having a grounded neutral conductor. To reduce the risk of electrical shock, do not plug into any other type of power system. Consult your authorized dealer or service station if you are not sure what type of power is supplied to your building.

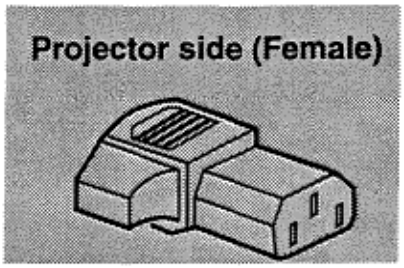

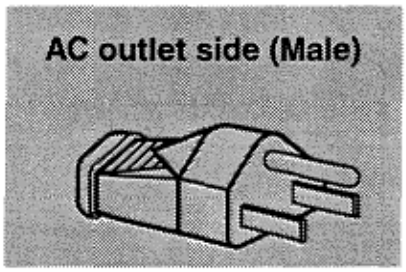

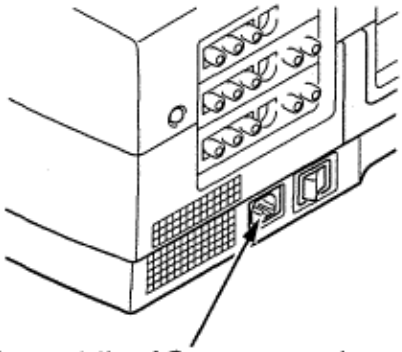

Connect the AC power supply cord (supplied) to the projector.
The socket-outlet must be near this equipment and must be easily accessible.

TERMINAL OF THE PROJECTOR

SIDE OF THE PROJECTOR (CONNECT THE COMPUTER)

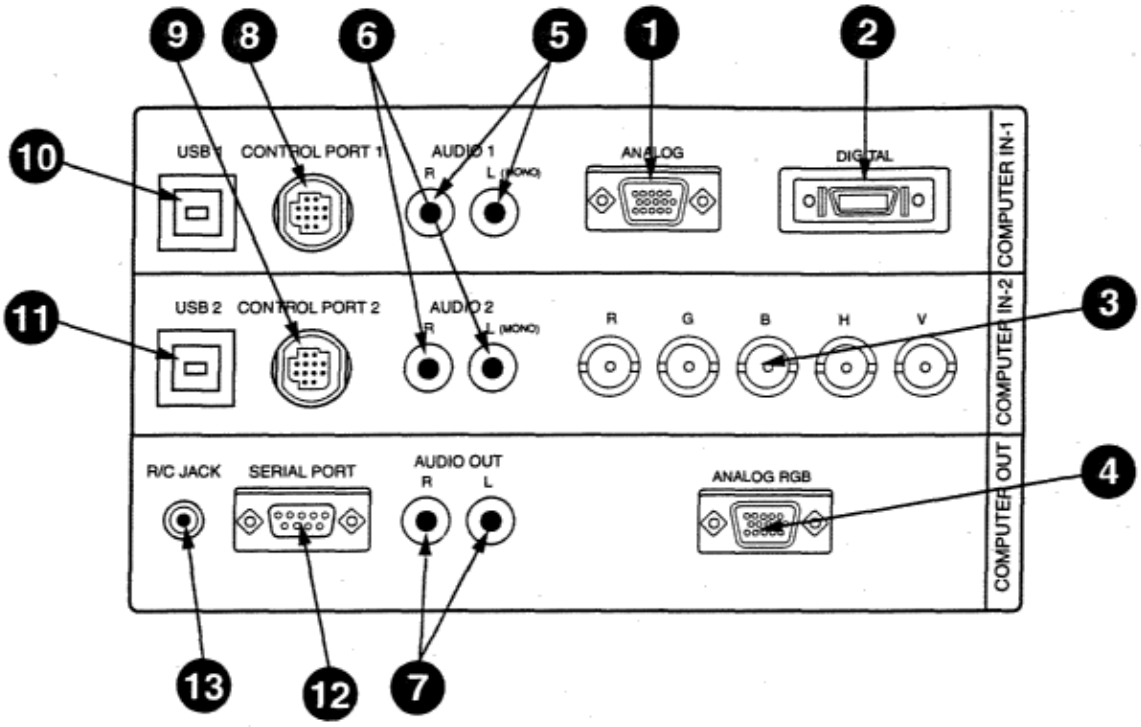

1 **COMPUTER INPUT-1 TERMINAL (ANALOG HDB 15-PIN)**
Used to connect a computer to the projector.

2 **COMPUTER INPUT-1 RMINAL (DIGITAL MDR 20-PIN)**
Used to connect a computer to the projector.

3 **COMPUTER INPUT-2 JACKS (BNC TYPE x 5)**
Used to connect a computer to the projector.

4 **MONITOR OUTPUT TERMINAL (ANALOG HDB 15-PIN)**
Used to connect a monitor to the projector.

5 **COMPUTER AUDIO INPUT-i JACKS (R and L)**
Used to connect an audio output from the computer to the
projector.

6 **COMPUTER AUDIO INPUT-2 JACKS (R and L)**
Used to connect an audio output from the computer to the projector.

7 **AUDIO MONITOR OUTPUT JACKS (R and L)**
Used to connect an audio input from audio equipment to the Projector.

8 **CONTROL PORT-1 CONNECTOR**
Used to connect a mouse cable to the projector.

9 **CONTROL PORT-2 CONNECTOR**
Used to connect a mouse cable to the projector.

10 **USB PORT-1 CONNECTOR**
Used to connect a computer to the projector.

11 **USB PORT-2 CONNECTOR**
Used to connect a computer to the projector.

12 **SERIAL PORT TERMINAL (DB9)**
Used to connect a computer to the projector.

13 **WIRED REMOTE JACK**
When using the wired remote control, connect the remote cable to this jack.

SIDE OF THE PROJECTOR (CONNECT THE VIDEO EQUIPMENT)

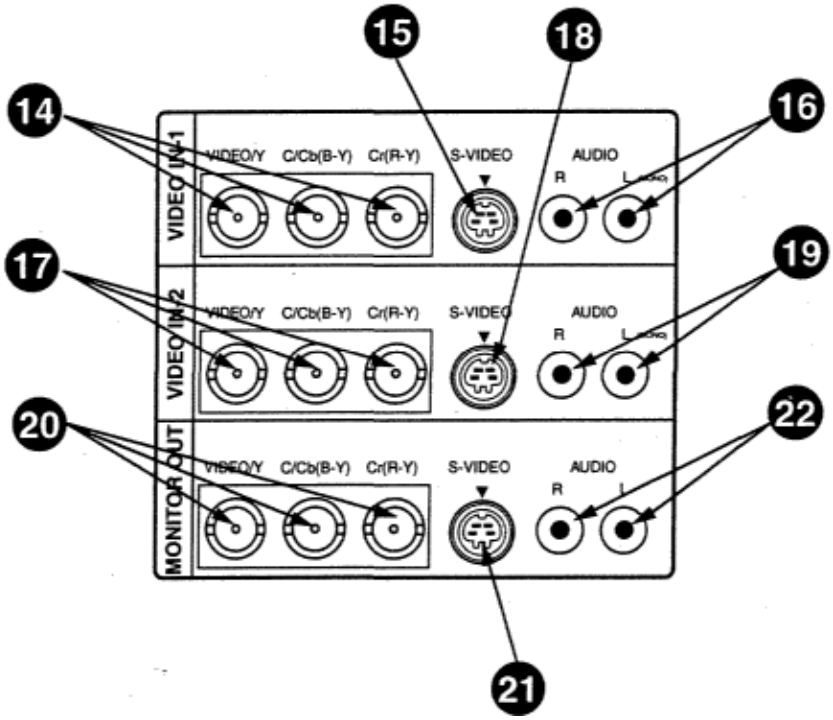

14 **VIDEO INPUT JACKS-1 (BNC TYPE x 3)**
Used to connect a video source to the projector.

15 **S-VIDEO INPUT JACK-1**
Used to connect a S-VHS video source to the projector.

16 **AUDIO INPUT JACKS-1 (R and L)**
Used to connect an audio source to the projector.

17 **VIDEO INPUT JACKS-2 (BNC TYPE x 3)**
Used to connect a video source to the projector.

18 **S-VIDEO INPUT JACK-2**
Used to connect a S-VHS video source to the projector.

19 **AUDIO INPUT JACKS-2 (R and L)**
Used to connect an audio source to the projector.

20 **VIDEO MONITOR OUTPUT JACKS (BNC TYPE x 3)**
Permits video connection to a monitor.

21 **VIDEO MONITOR (S-VIDEO) OUTPUT JACK**
Permits S-VHS video connection to a monitor.

22 **AUDIO MONITOR OUTPUT JACKS (R and L)**
Permits audio connection to a monitor.

CONNECTING THE COMPUTER

CONNECTING TO THE COMPUTER INPUT 1 TERMINAL (ANALOG HDB 15-PIN)

Personal computers can be connected to the HDB1 5-pin (VGA) terminal on the projector.

- Connect the computer to these terminals using the VGA cable and VGA/MAC adapter (provided).

CAUTION: For projectors, the VGA cable provided is designed to reduce RFI (Radio Frequency Interference) emissions. For regulatory compliance reasons, this cable must be used and must not be replaced by any other cable.

CONNECTING TO THE COMPUTER INPUT 1 TERMINAL (DIGITAL MDR 20-PIN)

Digital output signal from the computer can be connected to the DIGITAL terminal (MDR 20-pin). When using this input, Graphic Accelerator Board designed for this projector should be installed into your computer and set-up the computer configuration following instruction included in the Graphic Accelerator Board package. Refer to DIGITAL INPUT CONNECTION on page 15 and 17.

CONNECTING TO THE COMPUTER INPUT 2 JACKS (BNC x 5)

Personal computers can be connected to the computer input (Red, Green, Blue, Horiz. Sync. and Vert. Sync.) on the projector.

- Connect the computer to these jacks using the BNC cables (not provided).

CONNECTING TO THE COMPUTER AUDIO INPUT JACKS (1 and 2)

- Connect audio outputs from your computer to these jacks using the audio cable (not provided).

CONNECTING TO THE MULTI-POLE 12-PIN (CONTROL PORT) CONNECTORS (1 and 2)

- When the computer is operated by projector's remote control unit, connect three different type of cables (provided) between projector control port and computer mouse port or serial port.

COMPUTER TYPE	CABLE
IBM Compatible computer with PS/2 mouse port.	Mouse Cable for PS/2 port.
IBM Compatible computer with serial port.	Mouse Cable for Serial port.
Apple Macintosh computer with ADB mouse port.	Mouse Cable for ADB port.

■ CONTROL PORT

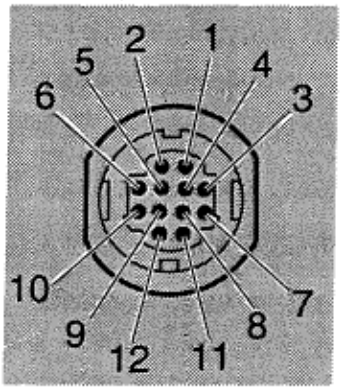

	PS/2 Port	Serial Port	ADB Port
1	———	T x D	———
2	CLK	———	ADB
3	DATA	———	———
4	———	———	———
5	———	———	———
6	———	———	———
7	———	READY	———
8	———	———	———
9	GND	GND	GND
10	———	———	———
11	———	———	———
12	———	———	———

CONTROL PORT CABLE REMOVAL HINT

Disconnect control port cable with following steps.

1. Hold the portion (A) of the connector with one hand.
2. Pull the portion (B) arrow direction and remove connector.

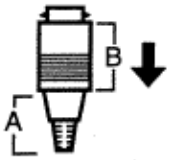

CONNECTING AN IBM-COMPATIBLE DESKTOP COMPUTER G HDB 15-PIN)

This terminal output the information of the selected computer source being viewed on the screen (Computer 1 or Computer 2).
When video source (“Video 1” or “Video 2”) is selected, this terminal outputs Computer 1 input information.
An external monitor can be connected to the HDB15-pin (VGA) terminal on the projector.

- Connect the monitor to this terminal usinq the VGA cable (not provided).

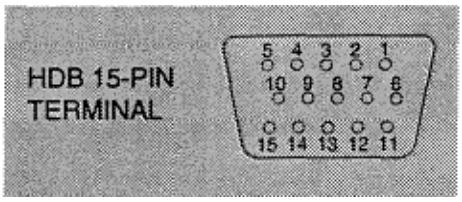

Pin No./Signal
1 Red input
2 Green input
3 Blue input
4 Sense 2
5 Ground (Horiz.sync.)
6 Ground (Red)
7 Ground (Green)
8 Ground (Blue)

Pin No./Signal 9 Non Connect
10 Ground (Vert. sync.)
11 Sense 0
12 Sense 1
13 Horiz. sync
14 Vert. sync
15 Reserved

CONNECTING TO THE AUDIO MONITOR OUTPUT (VARIABLE) JACKS

These jacks will contain the audio information of the selected program source being viewed on the screen (Computer 1,
Computer 2, Video 1 or Video 2). If you have selected program source Computer 2 the audio signal connected to the
Computer 2 audio input jack will be available at the audio monitor output jacks.
Use RCA type audio for connection.

- If the audio input of the audio equipment is stereo, be sure to connect the right and left channels to the respective right and left jacks.
- If the audio input of the audio equipment is monaural, connect it to the left jack.

CONNECTING TO THE SERIAL PORT (DB 9-PIN) TERMINAL

If you control the. projector by computer, you must connect a cable (not provided) from your computer to this terminal.

■ SERIAL PORT

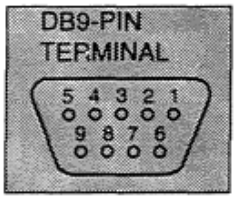

1	———
2	R x D
3	T x D
4	———
5	Ground
6	———
7	———
8	———
9	———

CONNECTING TO THE USB PORT CONNECTORS (1 and 2)

This Projector is designed for connecting with USB Port of the computer or peripheral equipment that is to be standard.

■ USB PORT

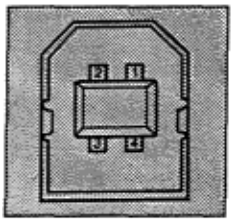

1	Vcc
2	- Data
3	+ Data
4	Ground

CONNECTING AN IBM-COMPATIBLE DESKTOP

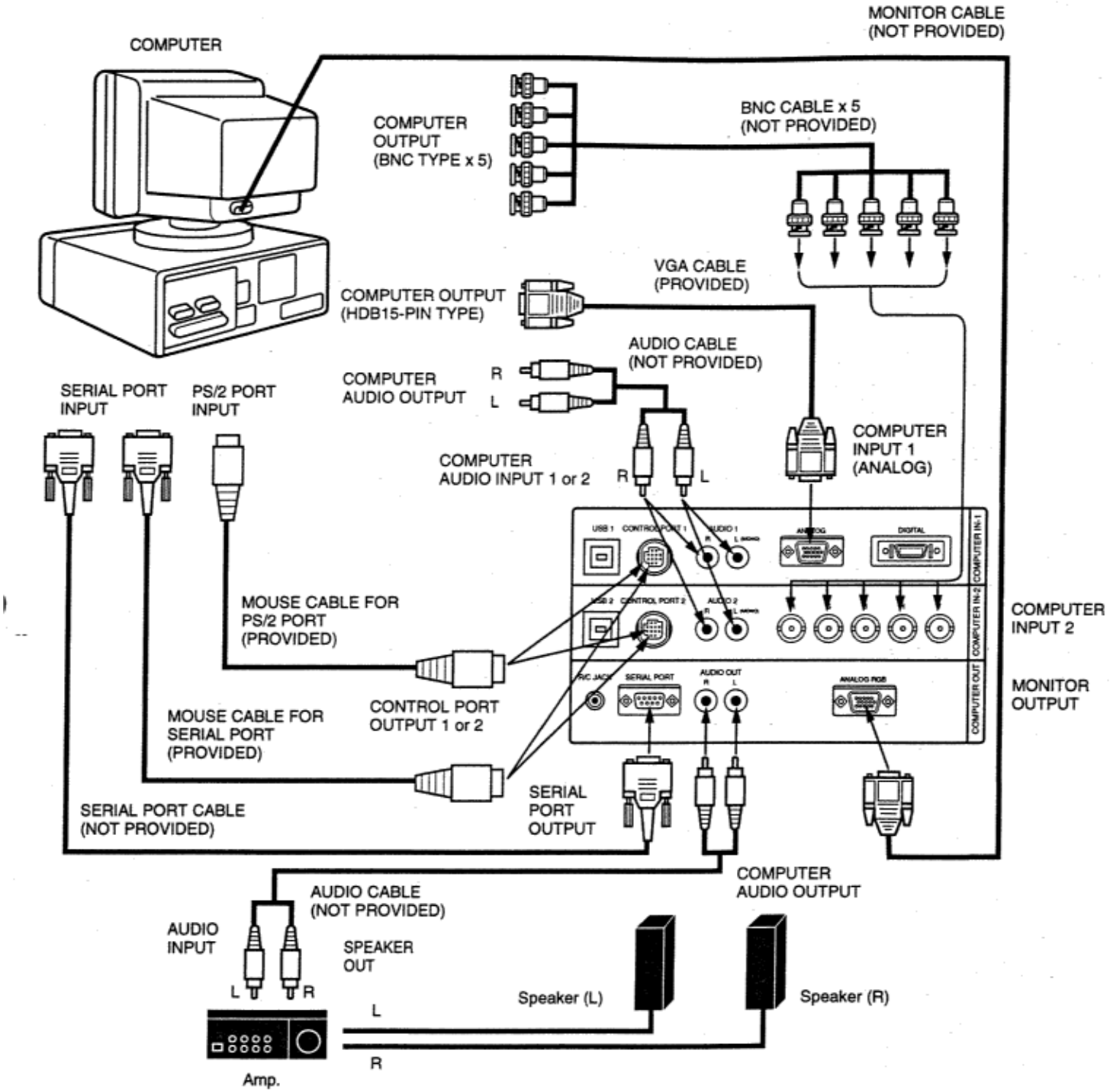

NOTE: When connecting the cable, the power cords of both the projector and the external equipment should be disconnected from AC outlet. Turn the projector and peripheral equipment on before the computer is switched on.

CONNECTING AN IBM-COMPATIBLE DESKTOP COMPUTER (DIGITAL INPUT CONNECTION)

NOTE: This connection need optionally sold Graphic Accelerator Board. For this information, contact to your authorized dealer.

Before using with digital connection, install (Plug in) Graphic Accelerator Board into PCI bus slot of the computer and set up the computer following instructions in the Graphic Accelerator Board package.

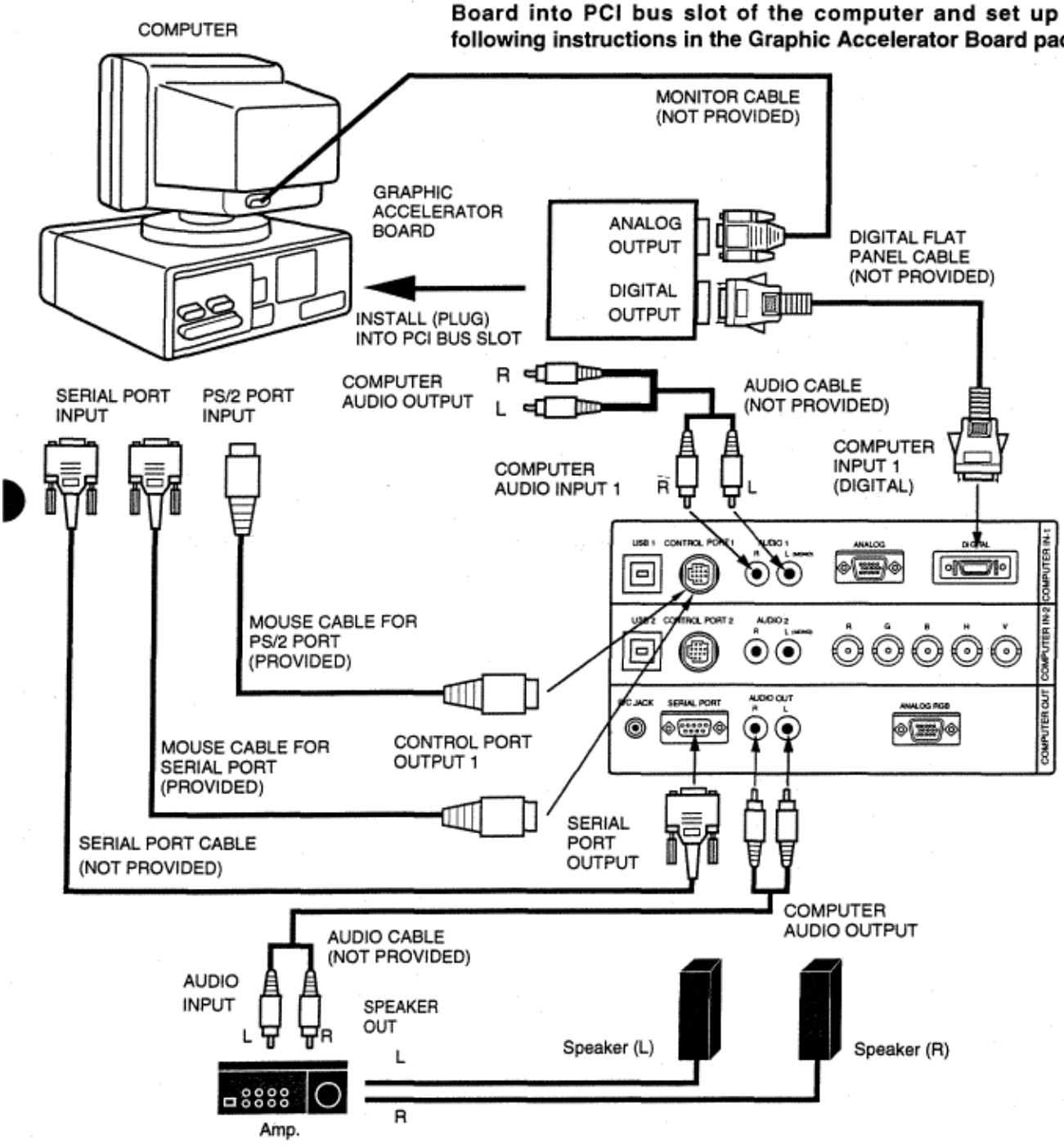

'NOTE: When connecting the cable, the power cords of both the projector and the external equipment should be disconnected from AC outlet. Turn the projector and peripheral equipment on before the computer is switched on.

CONNECTING AN IBM-COMPATIBLE LAPTOP COMPUTER

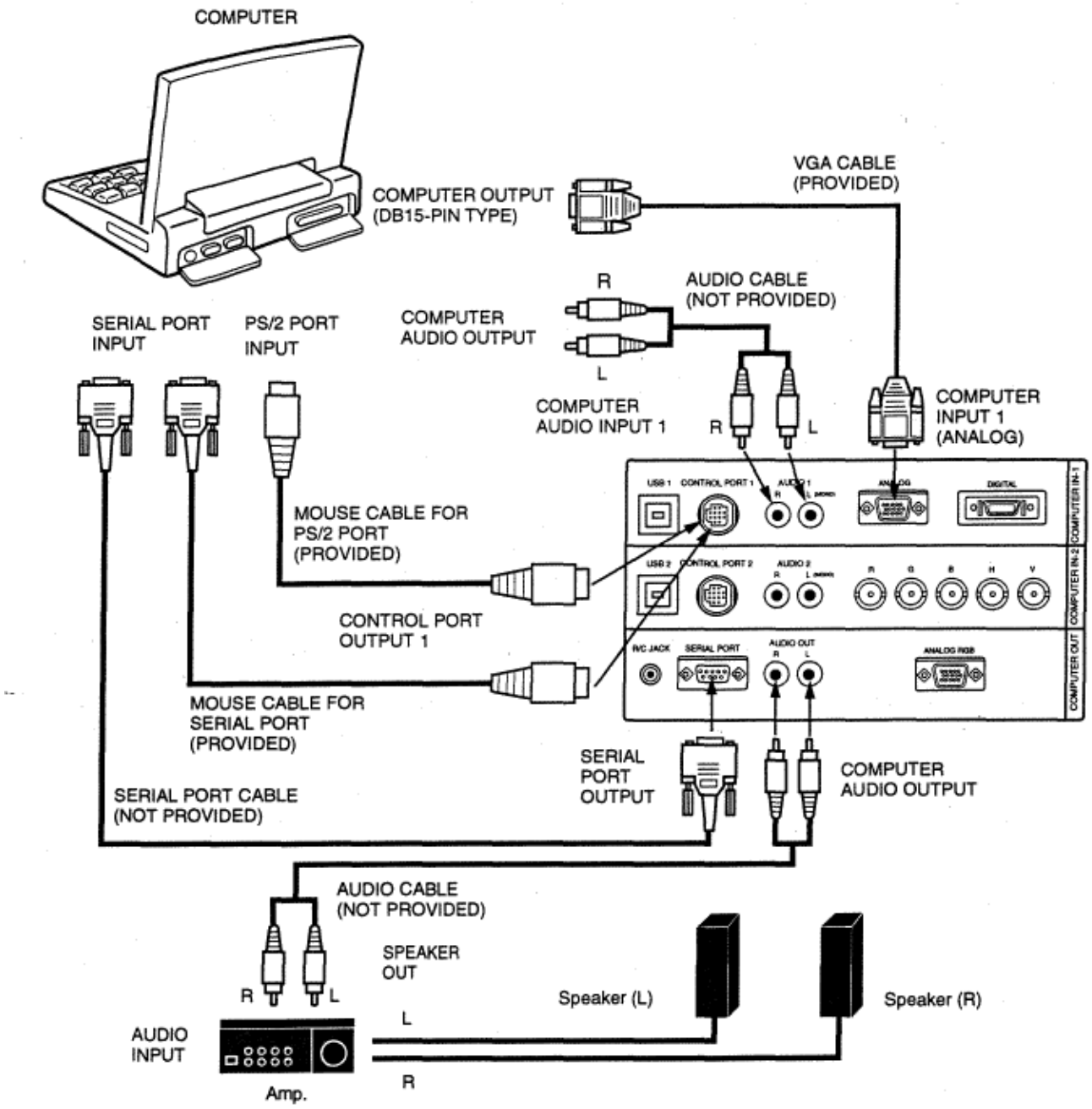

NOTE: When connecting the cable, the power cords of both the projector and the external equipment should be disconnected from AC outlet. Turn the projector and peripheral equipment on before the computer is switched on.

CONNECTING AN IBM-COMPATIBLE LAPTOP COMPUTER (DIGITAL INPUT CONNECTION)

NOTE: This connection need optionally sold Graphic Accelerator PC card. For this information, contact to your authorized dealer.

Before using with digital connection, install (Plug in) Graphic Accelerator PC card into card bus slot of the computer and set up the computer following instructions in the Graphic Accelerator PC card package.

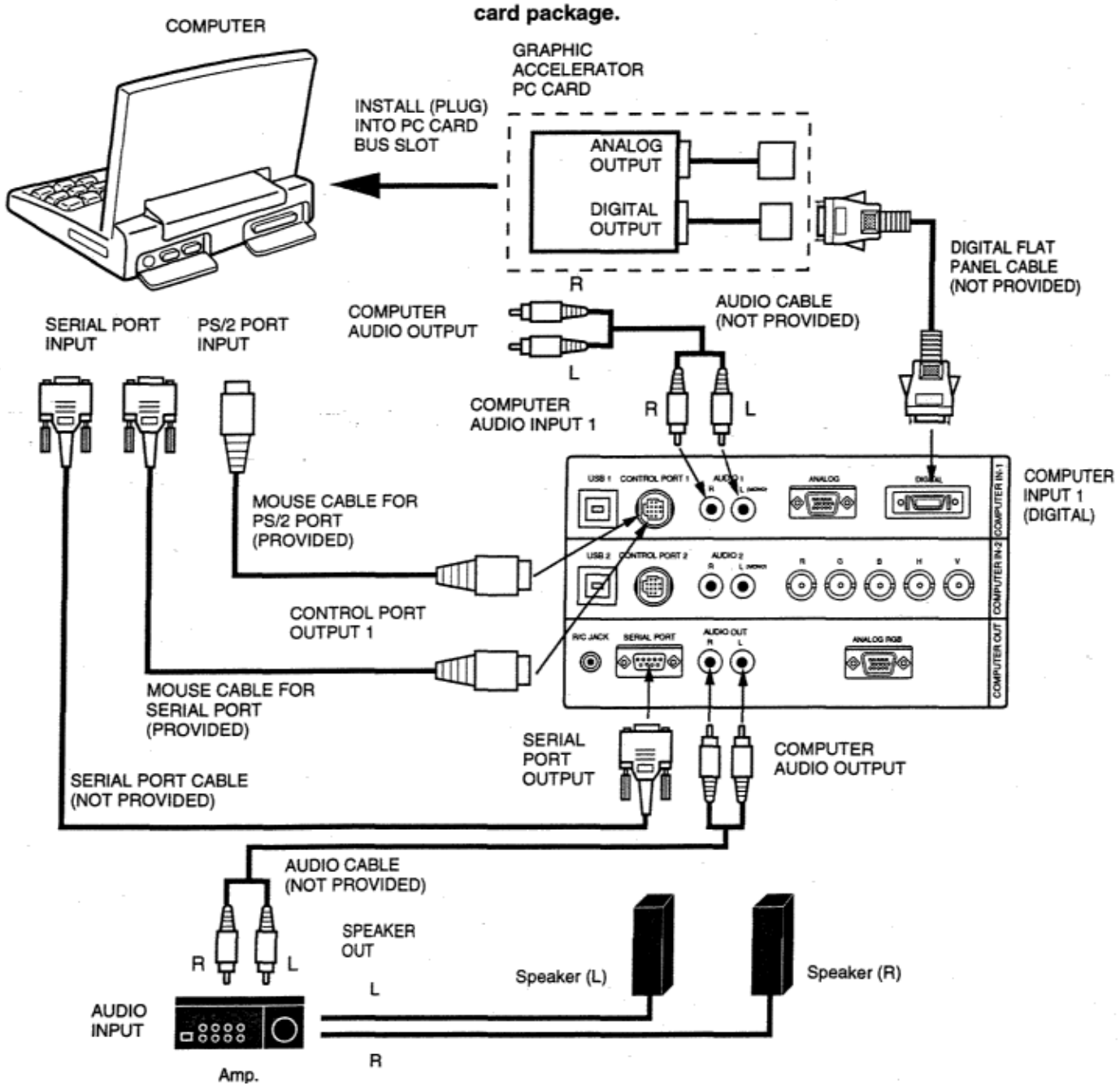

NOTE: When connecting the cable, the power cords of both the projector and the external equipment should be disconnected from AC outlet. Turn the projector and peripheral equipment on before the computer is switched on.

CONNECTING A MACINTOSH DESKTOP COMPUTER

COMPUTER

COMPUTER OUTPUT (BNC TYPE x 5)

BNC CABLE x 5 (NOT PROVIDED)

MONITOR CABLE (NOT PROVIDED)

VGA/MAC ADAPTER (PROVIDED)

COMPUTER OUTPUT

COMPUTER AUDIO OUTPUT R L

VGA CABLE (PROVIDED)

ADB PORT INPUT

ADB PORT INPUT

AUDIO CABLE (NOT PROVIDED)

COMPUTER INPUT 1 (ANALOG)

R L

COMPUTER AUDIO OUTPUT1 or 2

COMPUTER INPUT 2

MOUSE CABLE FOR ADB PORT (PROVIDED)

MONITOR OUTPUT

CONTROL PORT OUTPUT 1 or 2

SERIAL PORT OUTPUT

SERIAL PORT CABLE (NOT PROVIDED)

COMPUTER AUDIO OUTPUT

AUDIO CABLE (NOT PROVIDED)

AUDIO INPUT

R L

SPEAKER OUT

Speaker (L)

Speaker (R)

Amp.

L

R

Set the dip switches as shown in the table below depending on the RESOLUTION MODE that you want to use before you turn on the projector and computer.

RESOLUTION MODE	SW1	SW2	SW3	SW4	SW5	SW6
13" MODE (640 x 480)	ON	ON	OFF	OFF	OFF	OFF
16" MODE (832 x 624)	OFF	ON	OFF	ON	OFF	OFF
19" MODE (1024 x 768)	OFF	ON	ON	OFF	OFF	OFF
21" MODE (1152 x 870)	ON	ON	ON	ON	OFF	OFF

VGA/MAC ADAPTER

SW1 ~ SW6

ON

OFF

NOTE: When connecting the cable, the power cords of both the projector and the external equipment should be disconnected from AC outlet. Turn the projector and peripheral equipment on before the computer is switched on.

CONNECTING A MACINTOSH POWERBOOK COMPUTER

NOTE: The Macintosh PowerBook requires the use of the PowerBook Video Adapter shipped with the PowerBook.

COMPUTER

VGA/MAC ADAPTER (PROVIDED)

COMPUTER OUTPUT

VGA CABLE (PROVIDED)

COMPUTER AUDIO OUTPUT R L

ADB PORT INPUT

ADB PORT INPUT

AUDIO CABLE (NOT PROVIDED) R L

COMPUTER INPUT 1 (ANALOG)

COMPUTER AUDIO INPUT 1

MOUSE CABLE FOR ADB PORT (PROVIDED)

CONTROL PORT OUTPUT 1

SERIAL PORT OUTPUT

COMPUTER AUDIO OUTPUT

SERIAL PORT CABLE (NOT PROVIDED)

AUDIO INPUT

AUDIO CABLE (NOT PROVIDED)

R L

SPEAKER OUT

L

Speaker (L)

R

Speaker (R)

Amp.

Set the dip switches as shown in the table below depending on the RESOLUTION MODE that you want to use before you turn on the projector and computer.

RESOLUTION MODE	SW1	SW2	SW3	SW4	SW5	SW6
13" MODE (640 x 480)	ON	ON	OFF	OFF	OFF	OFF
16" MODE (832 x 624)	OFF	ON	OFF	ON	OFF	OFF
19" MODE (1024 x 768)	OFF	ON	ON	OFF	OFF	OFF
21" MODE (1152 x 870)	ON	ON	ON	ON	OFF	OFF

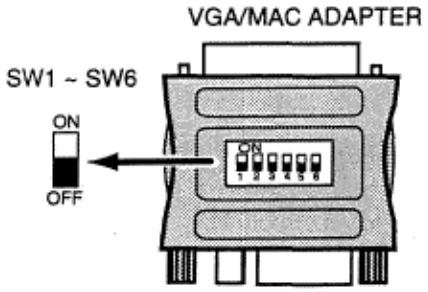

NOTE: When connecting the cable, the power cords of both the projector and the external equipment should be disconnected from AC outlet. Turn the projector and peripheral equipment on before the computer is switched on.

CONNECTING THE VIDEO EQUIPMENT

CONNECTING TO THE VIDEO INPUT JACKS (1 and 2) BNC TYPE x 3

Connect to the video outputs of a VCR, video disc player, DVD player, video camera, satellite TV tuner or other AV equipment. Connect video output from AV equipment to these jacks using the BNC cables.
The video input can be connected 3 types of signals; “COMPOSITE VIDEO”, “Y/C SEPARATE VIDEO” and COMPONENT VIDEO {Y, Cb (B-Y), Cr (R-Y)}.
Set VIDEO SOURCE of each video input (VIDEO IN-1 or VIDEO IN-2) to input video matter. (Refer to “VIDEO SOURCE SELECT” operation on page 37).

CONNECTING S-VHS VIDEO INPUT JACKS (1 and 2)

The Video input includes an extra video input jack marked S-VIDEO to allow connection to an S-VHS format VCR that has separate Y/C video signals. The S-VIDEO jack has priority over the VIDEO jack.

CONNECTING TO THE AUDIO INPUT JACKS (1 and 2)

Connect to the audio outputs of a VCR, video disc player, DVD player, video camera, satellite TV tuner or other AV equipment. Use RCA type audio cable for connection.

- If the audio signal from the AV equipment is stereo, be sure to connect the right and left channels to the respective right and left audio input jacks.
- If the external audio signal is monaural, connect it to the left jack.

CONNECTING TO THE VIDEO MONITOR OUTPUT JAOKS (BNC TYPE x 3)

These jacks will contain the video information of the selected program source being viewed on the screen (Video 1 or Video 2). If you have selected program source Video 2 the video signal connected to the Video 2 video input jack will be available at the video monitor output jacks. If you select program source “Computer 1” or “Computer 2, the video signal connected to the Video 1 video input jack will be available at the video monitor output jacks.
Use BNC cable for connection.

CONNECTING TO THE S-VHS VIDEO MONITOR OUTPUT JACK•

The Video monitor output includes an extra video input jack marked S-VIDEO to allow connection to an S-VHS format VCR that has separate Y/C video signals. The S-VIDEO jack has priority over the VIDEO jack.

CONNECTING TO THE AUDIO MONITOR OUTPUT JACKS

These jacks will contain the audio information of the selected program source being viewed on the screen (Video 1 or Video 2). If you have selected program source Video 2 the audio signal connected to the Video 2 audio input jack will be available at the audio monitor output jacks. If you select program source “Computer 1” or “Computer 2”, the audio signal connected to the Video 1 audio input jack will be available at the audio monitor output jacks.
Use RCA type audio cable for connection.

If the audio input of the audio equipment is stereo, be sure to connect the right and left channels to the respective right and left jacks.
If the audio input of the audio equipment is monaural, connect it to the left jack.

CONNECTING THE VIDEO EQUIPMENT

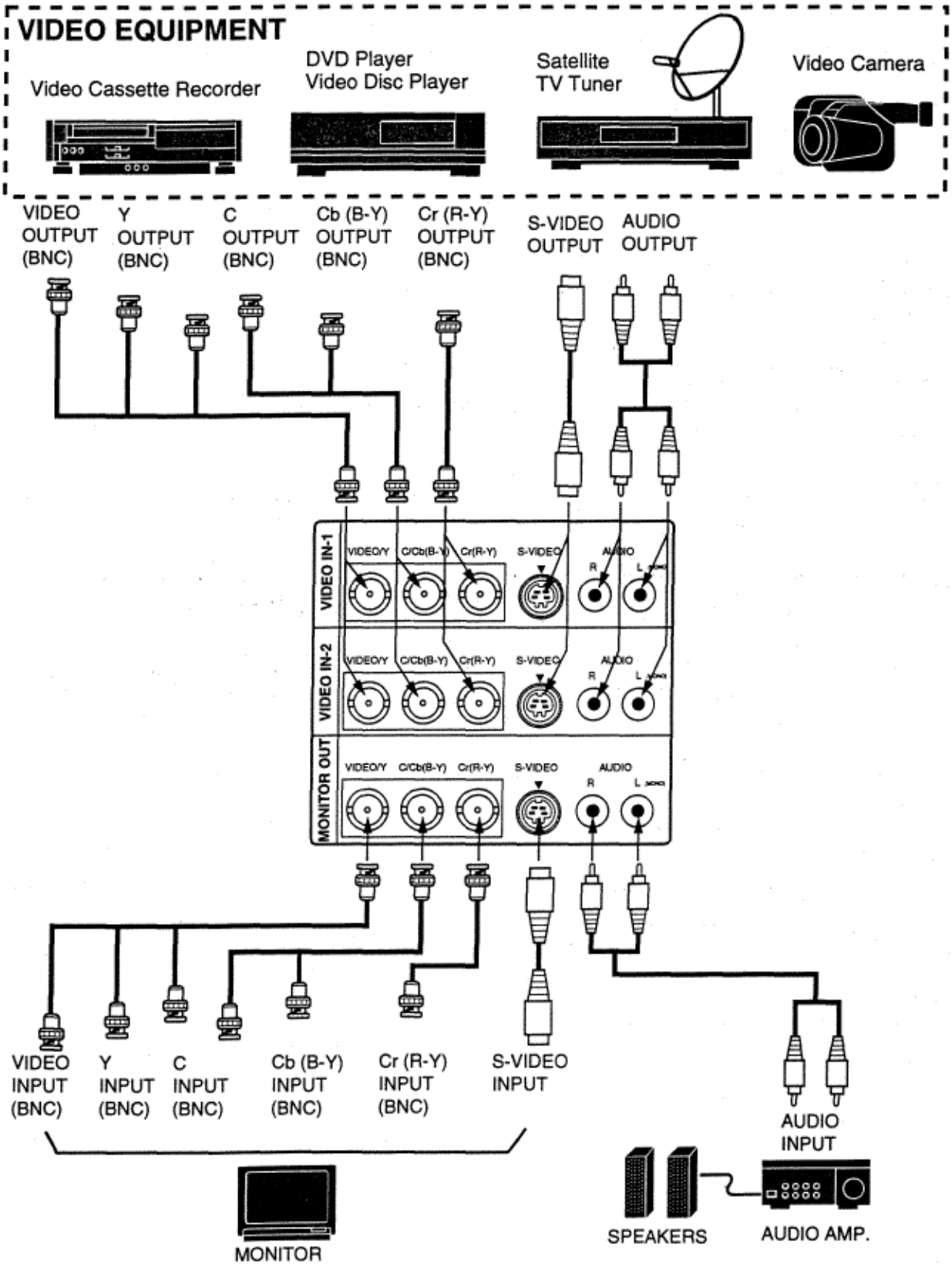

NOTE: When connecting the cable, the power cords of both the projector and the external equipment should be disconnected from AC outlet. Turn the projector on before the peripheral equipment is switched on.

CONTROLS AND INDICATORS

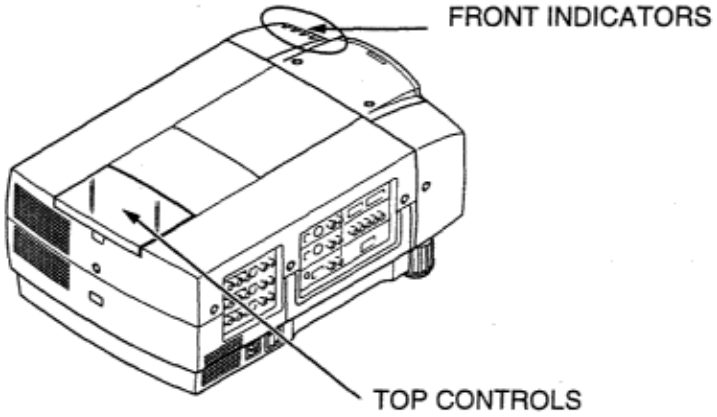

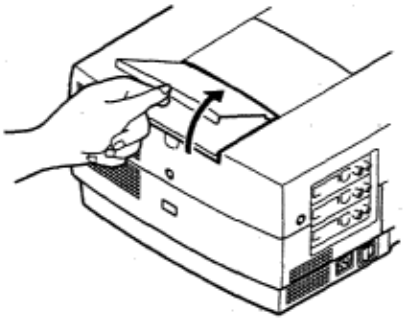

FRONT INDICATORS

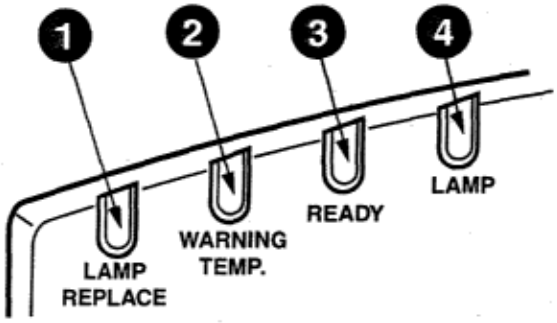

TOP CONTROLS

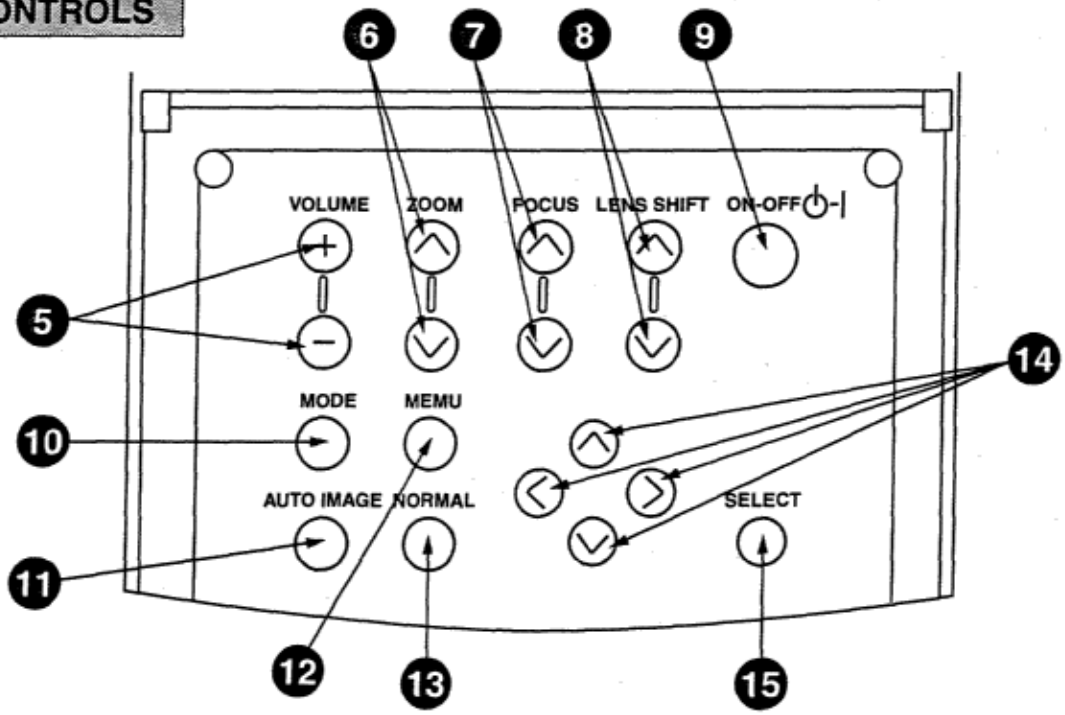

1. **LAMP REPLACEMENT INDICATOR**
Light is orange when the Lamp life draws to an end.

2. **TEMPERATURE WARNING INDICATOR**
Flashes red when internal projector temperature is too high.

3. **READY INDICATOR**
Light is green when projector lamp is ready to be turned on.

4. **LAMP POWER INDICATOR**
Light is dim when the projector is on.
Light is brightened when the projector is in stand-by mode.

5. **VOLUME BUTTONS**
Used to adjust volume.

6. **ZOOM BUTTONS**
Used to operate power zoom lens.

7. **FOCUS BUTTONS**
Used to operate power focus system.

8. **LENS SHIFT BUTTONS**
Used to operate power lens shift.

9. **POWER ON/OFF BUTTON**
Used to turn the projector on or off.

10. **MODE BUTTON**
Used to select source.
(Computer 1, Computer 2, Video 1 or Video 2 Input)

11. **AUTO IMAGE BUTTON**
Used to operate the AUTO IMAGE function.

12. **MENU BUTTON**
This button will activate the MENU operation.
Use this button, the POINT UP/DOWN/LEFT/RIGHT buttons and the SELECT button to make adjustments to the projector's setting in MENU operation.

13. **NORMAL BUTTON**
Used to reset to normal picture adjustment preset by factory.

14. **POINT UP/DOWN/LEFT/RIGHT BUTTONS**
To select an item on the MENU that you want to adjust. To select an item, move the arrow by pressing these buttons (UP, DOWN, LEFT or RIGHT).

15. **SELECT BUTTON**
This button has different functions depending on when used. This button is used to execute the item selected, to increase or decrease the values in certain items such as CONTRAST or BRIGHTNESS.

OPERATION OF THE REMOTE CONTROL

WIRELESS REMOTE CONTROL UNIT

This remote control unit is not only able to operate the projector but also usable as a wireless mouse for a PC. One pointing pad and two click buttons are used for wireless mouse operation. Wireless mouse is usable when PC mouse pointer is displayed on the screen. When the menu or indicator of the projector is displayed on the screen instead of the PC mouse pointer, the wireless mouse cannot be used.

NOTE: To use the unit as a PC wireless mouse, connect the projector to the PC with the attached cable. Signals from the projector are transmitted to the PC, enabling the remote control unit of the projector to be used as a PC wireless mouse. (Refer to “CONNECTING THE PROJECTOR” in pages 14to 19 for the connection.)

LASER POINTER button

This remote control emits a laser beam light as the Laser Pointer from the Laser Light Window. When the LASER POINTER button is pressed, laser light goes on: when the button is released, light goes off. Laser light is emitted with the RED light which tells the laser beam being emitted. The laser emitted is a class II laser; therefore, do not look into the laser light window or shine the laser beam on yourself or other people. The three marks to the right are the caution labels for the laser beam. **CAUTION**-use of controls or adjustments or performance of procedures other than those specified herein-may result hazardous radiation exposure.

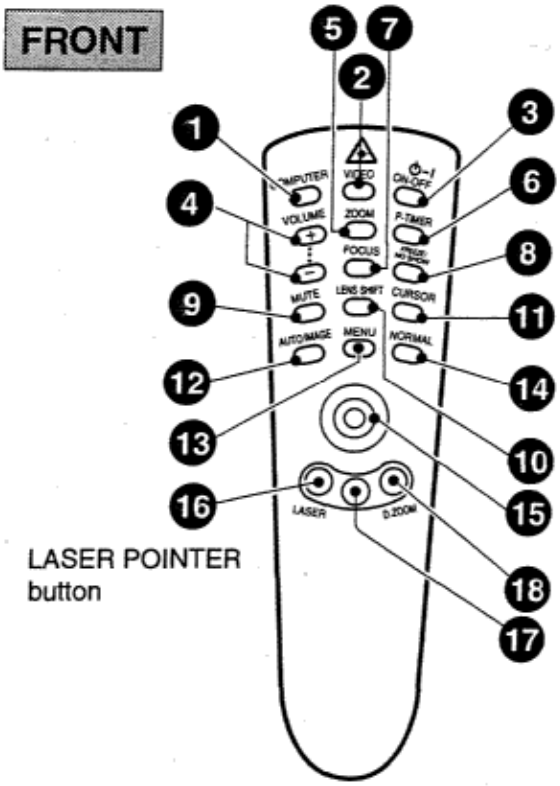

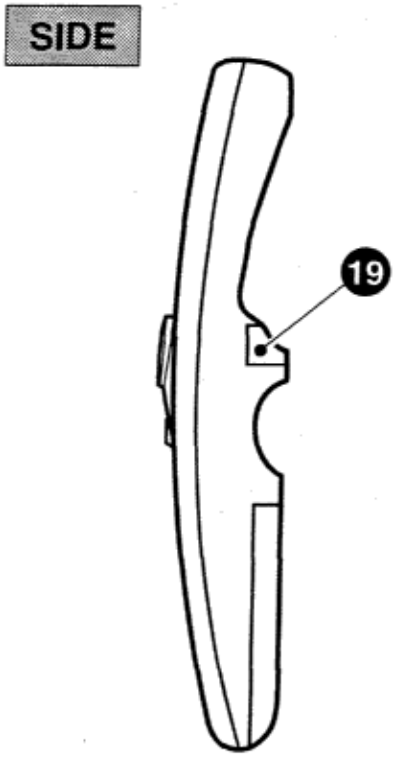

1. **COMPUTER SELECT BUTTON**
Used to select computer mode. (Computer 1 or Computer 2 Input)

2. **VIDEO SELECT BUTTON**
Used to select video mode. (Video 1 or Video 2 Input)

3. **POWER ON/OFF BUTTON**
Used to turn the projector on or oft.

4. **VOLUME BUTTONS**
Used to adjust volume.

5. **.ZOOM BUTTON**
Used to select power zoom lens adjust.

6. **P-TIMER BUTTON**
Used to operate the P-TIMER function.

7. **FOCUS BUTTON**
Used to select focus adjust.

8. **FREEZE/NO SHOW BUTTON**
Used to freeze on-screen image or change the screen into black image.

9. **SOUND MUTE BUTTON**
Used to mute sound.

10. **LENS SHIFT BUTTON**
Used to select power lens shift.

11. **CURSOR BUTTON**
Used to display CURSOR on the screen.

12. **AUTO IMAGE BUTTON**
Used to operate the AUTO IMAGE function.

13. **MENU BUTTON**
This button will activate the MENU operation. Use this button, the POINT UP/DOWN/LEFT/RIGHT button and the SELECT (REAR CLICK) button to make adjustments to the projector's setting in MENU operation.

14. **NORMAL BUTTON**
Use to reset to normal picture adjustment preset by factory.

15. **POINTING PAD (POINT UP/DOWWLEFT/RIGHT BUTTON)**
When in use as a remote for the projector
To select an item on the MENU that you want to adjust. To select an item, move the arrow by pressing the pad upward, downward, leftward or rightward.
Used to operate power zoom lens, power focus system or power lens shift by pressing the pad either upward or downward.
When in use as a wireless mouse
Used to move the pointer. The pointer is moved according to the direction you are pressing.

16. **LASER BUTTON**
When this button is pressed, laser light goes on; when the button is released, light goes off.

17. **FRONT CLICK BUTTON**
When in use as a remote for the projector
Used to compress the image in D.ZOOM mode.
When in use as a wireless mouse
This button has the same function as the right button in a PC mouse.

18. **DIGITAL ZOOM BUTTON**
Used to select digital zoom function.

19. **SELECT (REAR CLICK) BUTTON**
When in use as a remote for the projector.
This button has different functions depending on when used. This button is used to execute the item selected, to increase or decrease the values in certain items such as CONTRAST or BRIGHTNESS.
When in use as a wireless mouse
This button has the same function as the left button in a PC mouse.

Remote Control Battery Installation

1 Remove the battery compartment lid.

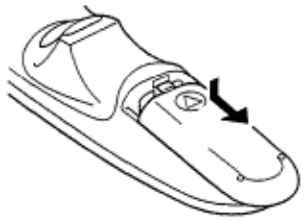

2 Slide the batteries into the compartment.

Note : For correct polarity (+ and - terminal), be sure the battery terminals are in contact with the pins in the compartment.

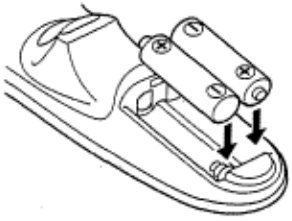

3 Replace the compartment lid.

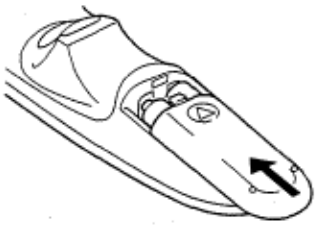

Using the Remote Control Unit

Point the remote control toward the projector (Receiver window) whenever pressing the buttons. Maximum operating range for the remote control is about 16.4' (5m) and 60° front and rear of the projector.

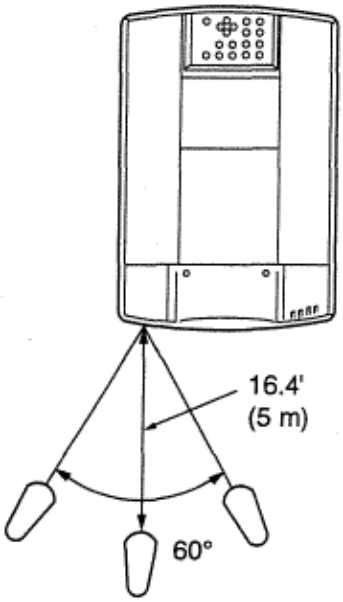

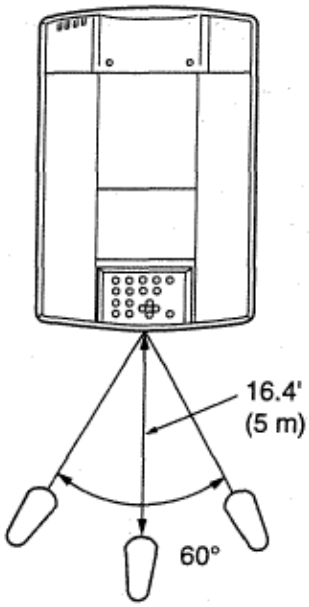

To insure safe operation, please observe the following precautions:

- Use (2) AA type alkaline batteries.
- Change two batteries at the same time.
- Do not use a new battery with a used battery.
- Avoid contact with water.
- Do not drop the remote control unit.
- If batteries have leaked on the remote control, carefully wipe the case clean and load new batteries.

WIRELESS/WIRED REMOTE CONTROL UNIT

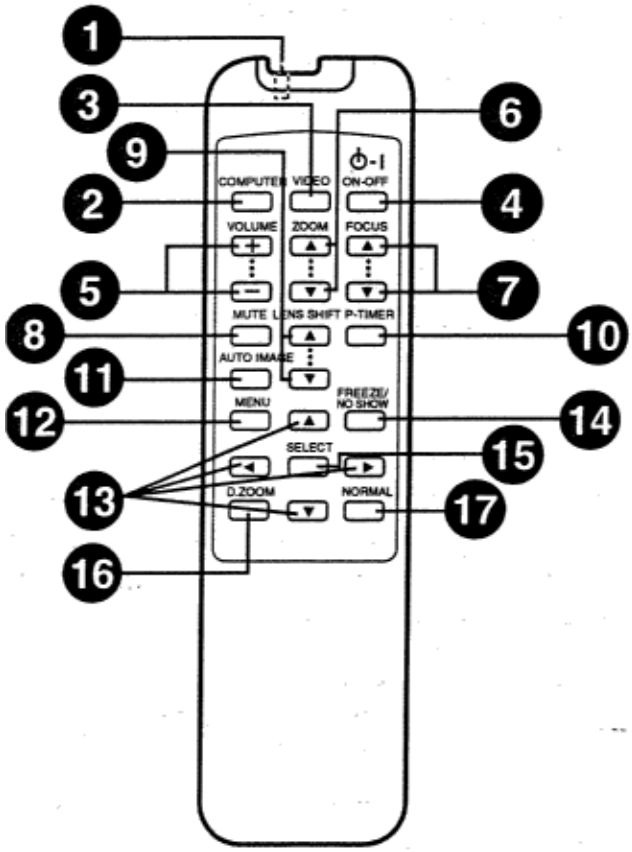

1. WIRED REMOTE JACK
When using the wired remote control, connect the remote cable to this jack.

2. COMPUTER SELECT BUTTON
Used to select computer mode.
(Computer 1 or Computer 2 Input)

3. VIDEO SELECT BUTTON
Used to select video mode. (Video 1 or Video 2 Input)

4. POWER ON/OFF BUTTON
Used to turn projector on or off.

5. VOLUME BUTTONS
Used to adjust volume.

6. ZOOM BUTTONS
Used to operate power zoom lens.

7. FOCUS BUTTONS
Used to operate power focus system.

8. SOUND MUTE BUTTON
Used to mute sound.

9. LENS SHIFT BUTTONS
Used to operate power lens shift.

10. P-TIMER BUTTON
Used to operate the P-TIMER function.

11. AUTO IMAGE BUTTON
Used to operate the AUTO IMAGE function.

12. MENU BUTTON
This button will activate the MENU operation.
Use this button, the POINT UP/DOWN/LEFT/RIGHT buttons and the SELECT button to make adjustments to the projector's setting in MENU operation.

13. POINT UP/DOWN/LEFT/RIGHT BUTTONS
To selectan item on the MENU that you want to adjust. To select an item, move the arrow by pressing these buttons
(UP, DOWN, LEFT or RIGHT).

14. FREEZE/NO SHOW BUTTON
Used to freeze on-screen image or change the screen into black image.

15. SELECT BUTTON
This button has different functions depending on when used. This button is used to execute the item selected, to increase or decrease the values in certain items such as CONTRAST or BRIGHTNESS.

16. DIGITAL ZOOM BUTTON
Use to select digital zoom function.

17. NORMAL BUTTON
Used to reset to normal picture adjustment preset by factory.

Remote Control Battery Installation

1 Remove the battery compartment lid.

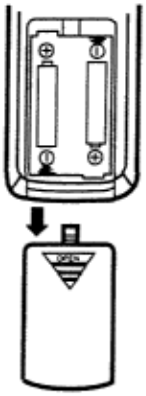

2 Slide the batteries into the compartment.

Note : For correct polarity (+ and - terminal), be sure the battery terminals are in contact with the pins in the compartment.

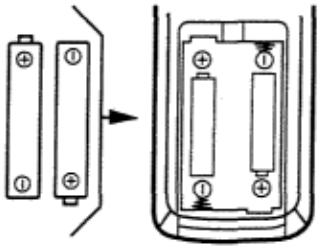

3 Replace the compartment lid.

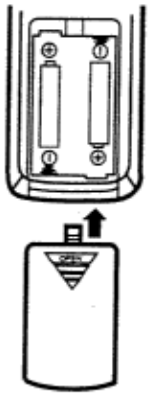

The remote control unit can be used as wireless or wired remote control.

Using the Remote Control Unit (wireless)

Point the remote control toward the projector (Receiver window) whenever pressing the buttons. Maximum operating range for the remote control is about 16.4' (5m) and 60° front and rear of the projector

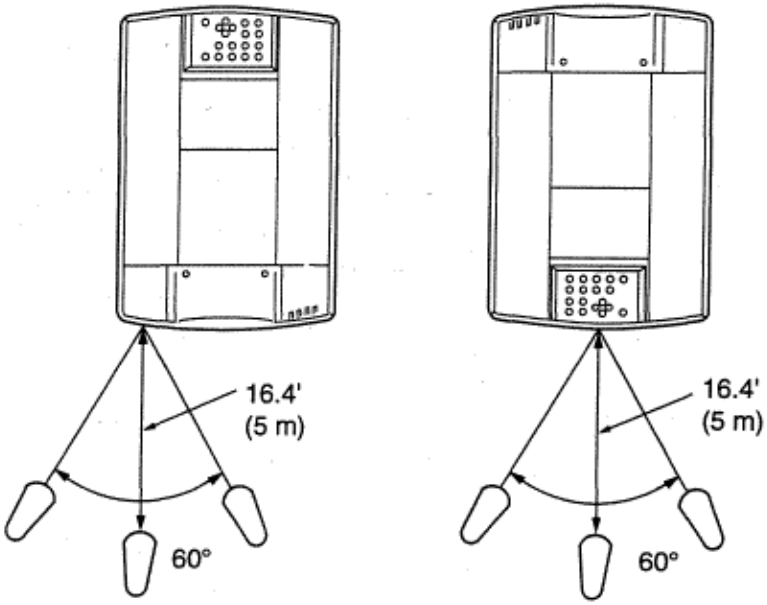

Using the Remote Control Unit (wired)

Connect a remote control cable to R/C jacks located on the wireless/wired remote control unit and the side of the projector.

To insure safe operation, please observe the following precautions:

- Use (2) AA type alkaline batteries.
- Change two batteries at the same time.
- Do not use a new battery with a used battery.
- Avoid contact with water.
- Do not drop the remote control unit.
- If batteries have leaked on the remote control, carefully wipe the case clean and load new batteries.

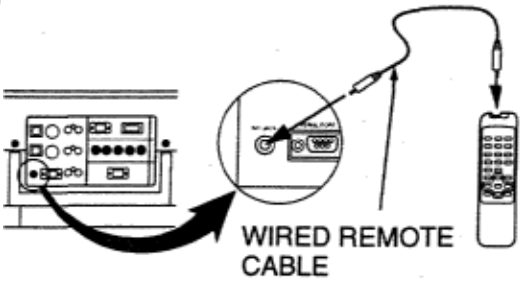

CONTROL THE PROJECTOR

The projector has two types of operation: DIRECT OPERATION and MENU OPERATION. DIRECT OPERATION allows you to operate the projector by using one button without showing the MENU. In MENU OPERATION mode, you display menus where you can adjust the projector's settings. Follow the instruction for each control.

DIRECT OPERATION

ADJUST ITEM	TOP CONTROL OF THE PROJECTOR	WIRELESS/WIRED REMOTE CONTROL	WIRELESS REMOTE CONTROL
POWER ON/OFF	POWER ON-OFF	POWER ON-OFF	POWER ON-OFF
MODE SELECT	MODE	COMPUTER VIDEO	COMPUTER VIDEO
SOUND VOLUME	VOLUME (+) and (-)	VOLUME (+) and (-)	VOLUME (+) and (-)
SOUND MUTE	NOT AVAILABLE	MUTE	MUTE
OOM	ZOOM (▲) and (▼)	ZOOM (▲) and (▼)	ZOOM POINT (UP/DOWN)
FOCUS	FOCUS (▲) and (▼)	FOCUS (▲) and (▼)	FOCUS POINT (UP/DOWN)
LENS SHIFT	LENS SHIFT (▲) and (▼)	LENS SHIFT (▲) and (▼)	LENS SHIFT POINT *UP/DOWN)
DIGITAL ZOOM	NOT AVAILABLE	D. ZOOM SELECT POINT (UP/DOWN/LEFT/RIGHT)	D. ZOOM SELECT (REAR CLICK) FRONT CLICK POINT (UP/DOWN/LEFT/RIGHT)
NORMAL PICTURE	NORMAL	NORMAL	NORMAL
FREEZE PICTURE	NOT AVAILABLE	FREEZE NO/SHOW	FREEZE/NO SHOW
NO SHOW	NOT AVAILABLE	FREEZE/NO SHOW	FREEZE/NO SHOW
P-TIMER	NOT AVAILABLE	P-TIMER	P-TIMER
AUTO IMAGE	AUTO IMAGE	AUTO IMAGE	AUTO IMAGE
CURSOR	NOT AVAILABLE	NOT AVAILABLE	CURSOR

MENU OPERATION

ADJUST ITEM	TOP CONTROL OF THE PROJECTOR	WIRELESS/WIRED REMOTE CONTROL	WIRELESS REMOTE CONTROL
MODE SELECT	MENU POINT LEFT/RIGHT SELECT POINT UP/DOWN SELECT	MENU POINT LEFT/RIGHT SELECT POINT UP/DOWN SELECT	MENU POINT (LEFT/RIGHT) SELECT (REAR CLICK) POINT (UP/DOWN) SELECT (REAR CLICK)

1. COMPUTER/VIDEO MODE

ADJUST ITEM	TOP CONTROL OF THE PROJECTOR	WIRELESS/WIRED REMOTE CONTROL	WIRELESS REMOTE CONTROL
SOUND SOUND VOLUME TREBLE BASS BUIT-IN SP. SOUND MUTE	MENU POINT LEFT/RIGHT SELECT POINT UP/DOWN SELECT	MENU POINT LEFT/RIGHT SELECT POINT UP/DOWN SELECT	MENU POINT (LEFT/RIGHT) SELECT (REAR CLICK) POINT (UP/DOWN) SELECT (REAR CLICK)
LANGUAGE			
SETTING BLUE BACK DISPLAY REVERSE T/B REVERSE R/L SPLIT WIPE POWER MANAGEMENT USB REMOTE CONTROL LAMP AGE	MENU POINT LEFT/RIGHT SELECT POINT UP/DOWN SELECT	MENU POINT LEFT/RIGHT SELECT POINT UP/DOWN SELECT	MENU POINT (LEFT/RIGHT) SELECT (REAR CLICK) POINT(UP/DOWN) SELECT (REAR CLICK)

2. VIDEO MODE

ADJUST ITEM	TOP CONTROL OF THE PROJECTOR	WIRELESS/WIRED REMOTE CONTROL	WIRELESS REMOTE CONTROL
COLOR SYSTEM	MENU POINT LEFT/RIGHT SELECT POINT UP/DOWN SELECT	MENU POINT LEFT/RIGHT SELECT POINT UP/DOWN SELECT	MENU POINT (LEFT/RIGHT) SELECT (REAR CLICK) POINT (UP/DOWN) SELECT (REAR CLICK)
VIDEO SOURCE VIDEO Y,C Y, Cb, Cr			
PICTURE IMAGE COLOR TINT WHITE BALANCE CONTRAST BRIGHTNESS SHARPNESS	MENU POINT LEFT/RIGHT SELECT POINT UP/DOWN SELECT	MENU POINT LEFT/RIGHT SELECT POINT UP/DOWN SELECT	MENU POINT (LEFT/RIGHT) SELECT (REAR CLICK) POINT (UP/DOWN) SELECT (REAR CLICK)
PICTURE SCREEN WIDE REGULAR			

3. COMPUTER MODE

ADJUST ITEM	TOP CONTROL OF THE PROJECTOR	WIRELESS/WIRED REMOTE CONTROL	WIRELESS REMOTE CONTROL
COMPUTER SYSTEM	MENU POINT LEFT/RIGHT SELECT POINT UP/DOWN SELECT	MENU POINT LEFT/RIGHT SELECT POINT UP/DOWN SELECT	MENU POINT (LEFT/RIGHT) SELECT (REAR CLICK) POINT (UP/DOWN) SELECT (REAR CLICK)
AUTO IMAGE FINE SYNC TOTAL DOTS POSITION	MENU POINT LEFT/RIGHT SELECT POINT UP/DOWN SELECT	MENU POINT LEFT/RIGHT SELECT POINT UP/DOWN SELECT	MENU POINT (LEFT/RIGHT) SELECT (REAR CLICK) POINT (UP/DOWN) SELECT (REAR CLICK)
PICTURE IMAGE FINE SYNC TOTAL DOTS WHITE BALANCE CONTRAST BRIGHTNESS SHARPNESS	MENU POINT LEFT/RIGHT SELECT POINT UP/DOWN SELECT	MENU POINT LEFT/RIGHT SELECT POINT UP/DOWN SELECT	MENU POINT (LEFT/RIGHT) SELECT (REAR CLICK) POINT (UP/DOWN) SELECT (REAR CLICK)
PICTURE POSITION	MENU POINT LEFT/RIGHT SELECT POINT UP/DOWN SELECT	MENU POINT LEFT/RIGHT SELECT POINT UP/DOWN SELECT	MENU POINT (LEFT/RIGHT) SELECT (REAR CLICK) POINT (UP/DOWN) SELECT (REAR CLICK)
PC ADJUSTMENT	MENU POINT LEFT/RIGHT SELECT POINT UP/DOWN SELECT	MENU POINT LEFT/RIGHT SELECT POINT UP/DOWN SELECT	MENU POINT (LEFT/RIGHT) SELECT (REAR CLICK) POINT (UP/DOWN) SELECT (REAR CLICK)
PICTURE SCREEN TRUE DIGITAL ZOOM	MENU POINT LEFT/RIGHT SELECT POINT UP/DOWN SELECT POINT LEFT/RIGHT/UP/DOWN	MENU POINT LEFT/RIGHT SELECT POINT UP/DOWN SELECT POINT LEFT/RIGHT/UP/DOWN	MENU POINT (LEFT/RIGHT) SELECT (REAR CLICK) POINT (UP/DOWN) SELECT (REAR CLICK) FRONT CLICK POINT (LEFT/RIGHT/UP/DOWN)

NOTES:

1. The MENU, once activated, will not disappear unless you choose MENU QUIT. If you switch to DIRECT operation by pressing a DIRECT operation button while in MENU mode, the menus will disappear and the MENU operation will end.
2. You can use the REMOTE CONTROL UNIT or the TOP CONTROL OF THE PROJECTOR to operate the MENU operation. ...

TURNING ON/OFF THE PROJECTOR

TO TURN ON THE PROJECTOR

Connect the projector to a source (Computer, VCR, Video Camera, Video Disc Player, etc.) using the appropriate terminals on the side of the projector (See “CONNECTING THE PROJECTOR” section on pages 10-21).

Connect the projector’s AC power cord into a wall outlet and turn the MAIN ON/OFF switch (located on the side of the projector) to the ON position. The LAMP POWER indicator will light RED, the READY indicator will light GREEN.

Press the POWER ON/OFF button on the remote control unit or on the projector to ON. The LAMP POWER indicator light will dim and the cooling fans will operate. The wait display appears on the screen and the count-down starts (30-29-28-...1). The signal from the source appears after 30 seconds.

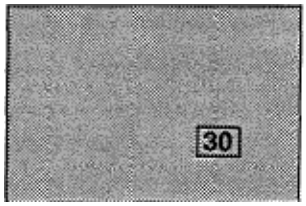

CAUTION:
TO MAINTAIN THE LIFE OF THE LAMP, ONCE YOU HAVE TURNED IT ON, WAIT AT LEAST 5 MINUTES BEFORE TURNING IT OFF.

NOTE: TEMPERATURE WARNING INDICATOR flashes red, the projector will automatically turn off.

Wait at least 5 minutes before turning the projector. If the TEMPERATURE WARNING INDICATOR continued to flash, follow the procedures below:

(1). Press POWER ON/OFF button to OFF.
(2). Check the air filter for dust accumulation.
(3). Remove dust with vacuum cleaner (See ‘AIR FILTER CARE AND CLEANING’ section on page 53.)
(4). Press POWER ON/OFF button to ON.

If the TEMPERATURE WARNING INDICATOR still continues to flash, call your authorized dealer or service station.

TO TURN OFF THE PROJECTOR

Press the POWER ON/OFF button on the remote control unit or on the projector. The “Power off ?“ appears on the screen. Press again the POWER ON/OFF button to turn OFF the projector. The LAMP POWER indicator will light bright and READY indicator will turn off. The cooling fans will operate for 90 seconds after the projector is turned off. (During this “cooling down” period, the projector cannot be turned on.) The READY indicator will light green- again and the projector may be turned on by pressing the POWER ON/OFF button. To power down completely, turn the MAIN ON/OFF switch (located on the side of the projector) to the OFF position.

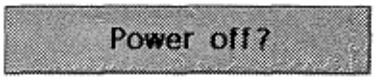

DIRECT OPERATION

MODE SELECT

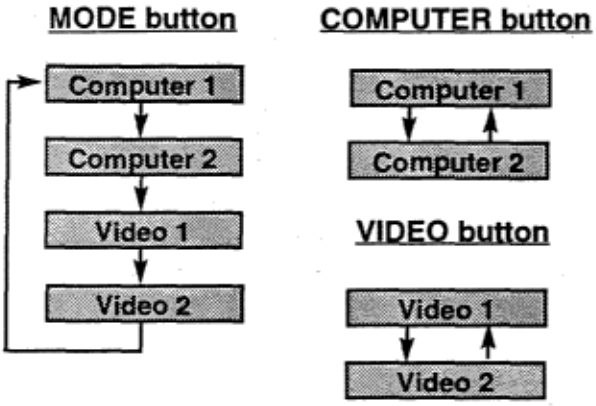

Press the MODE button on the projector or the COMPUTER and VIDEO button on the remote control unit to select Computer 1, Computer 2, Video 1 or Video 2 Input. The “Computer 1”, “Computer 2”, “Video 1” or “Video 2” display will appear on the screen for a few seconds.

SOUND VOLUME ADJUSTMENT

Press the VOLUME buttons on the projector or on the remote control unit to adjust the volume. The volume display will be displayed on the screen for a few seconds. Pressing volume (+) will increase volume and increase the number on the screen. Pressing volume (-) will decrease volume and decrease the number on the screen.

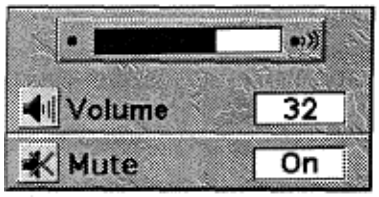

SOUND MUTE FUNCTION

Pressing the MUTE button on the remote control unit will mute audio. Press the MUTE button again to restore audio to its previous level. The mute display will be displayed on the screen for afew seconds.

ZOOM ADJUSTMENT

Use Top control and Wireless/Wired remote control unit.
Press the ZOOM (▲) or (▲) button to obtain your desired picture size. For a larger picture, press (▲) and for a smaller picture, press (▼).

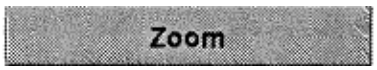

Use Wireless remote control unit.
Press the ZOOM button and press POINT UP/DOWN button(s) to obtain your desired picture size. The Zoom display will be displayed on the screen for a few seconds. For a larger picture, press (UP) and for a smaller picture, press (DOWN).

FOCUS ADJUSTMENT

Use Top control and Wireless/Wired remote control unit.
Press the FOCUS (▲) or (▼) button for a sharper, crisper picture.

Use Wireless remote control unit.
Press the FOCUS button and press POINT UP/DOWN button(s) to obtain a sharper, crisper picture. The Focus display will be displayed on the screen for a few seconds.

LENS SHIFT FUNCTION

Use Top control and Wireless/Wired remote control unit.
Press the LENS SHIFT (▲) or (▼) button to obtain your desired screen position.

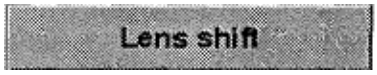

Use Wireless remote control unit.
Press the LENS SHIFT button and press POINT UP/DOWN button(s) to obtain your desired screen position. The Lens shift display will be displayed on the screen for a few seconds.

DIGITAL ZOOM FUNCTION

Press the D. ZOOM button on the wireless remote control unit. The “D.zoom” and the magnifying-glass icon is displayed to indicate Digital zoom mode. Digital zoom mode can be adjust the image size or pan the image.

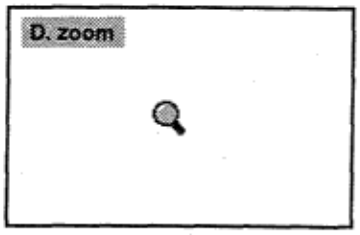

To expand the image size, press SELECT (REAR CLICK) button. The image is magnified by degrees (Expand function).
To compress the image size, press FRONT CLICK button. The size of image is reduced by degrees (Compress function).
To pan the image, press POINT UP/DOWN/LEFT/RIGHT (POINTING PAD) button(s). The image move to the direction indicated (Panning function)
See the page 49 for more detail.

NORMAL PICTURE FUNCTION

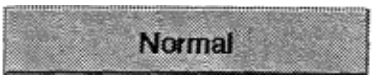

The normal picture image level is factory preset on the projector and can be restored anytime by pressing the NORMAL button on the projector or on the remote control unit. The “Normal’ display will be displayed on the screen for a few seconds.

FREEZE PICTURE FUNCTION

Press the FREEZE/NO SHOW button on the remote control unit, and the picture will remain on-screen. This function is cancelled when the FREEZE/NO SHOW button is pressed again or any other button is pressed.

NOTE: Your computer or video equipment is not affected by this function, and will continue to run.

NO SHOW FUNCTION

Press the FREEZE/NO SHOW button (on the remote control unit) is twice. The screen will change into black image and the- “NO SHOW” is displayed on the screen for a few seconds.

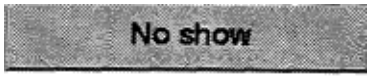

This function is cancelled when the FREEZE/NO SHOW button is pressed again or any other function button is pressed.

P-TIMER FUNCTION

Press the P-TIMER button on the remote control unit. The timer display “00:00” appears on the screen and the timer starts to count the time (00:00 to 59:59). Press again the P-TIMER button to stop the timer. Then press the P-TIMER button to cancel the P-TIMER function.

AUTO IMAGE FUNCTION

Press the AUTO IMAGE button on the projector or on the remote control unit. The item(s) indicated “ON” in the AUTO
IMAGE FUNCTION are adjusted automatically.
If all the items in AUTO IMAGE FUNCTION are “OFF”, AUTO IMAGE SETTING display appears. If you wish to operate the AUTO IMAGE FUNCTION, perform the steps 3 - 9 of “AUTO IMAGE FUNCTION” section on page 42.

CURSOR FUNCTION

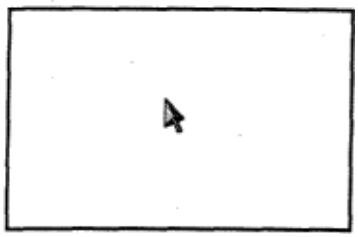

Press the CURSOR button on the wireless remote control unit. The CURSOR is displayed on the screen. Press POINT UP/DOWN/LEFT/RIGHT (POINTING PAD) button(s) to control CURSOR. The CURSOR is moved according to the direction you are pressing. Press CURSOR button again, and CURSOR disappears.

MENU OPERATION

In MENU OPERATION mode, you can adjust the projector. You can use the TOP CONTROL OF THE PROJECTOR or the REMOTE CONTROL UNIT.

TOP CONTROL OF THE PROJECTOR

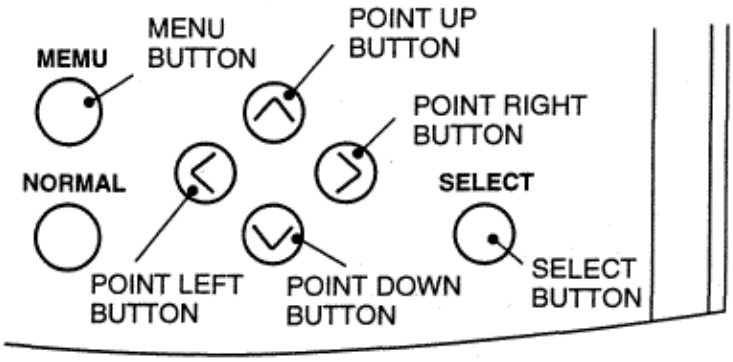

WIRELESS REMOTE CONTROL UNIT

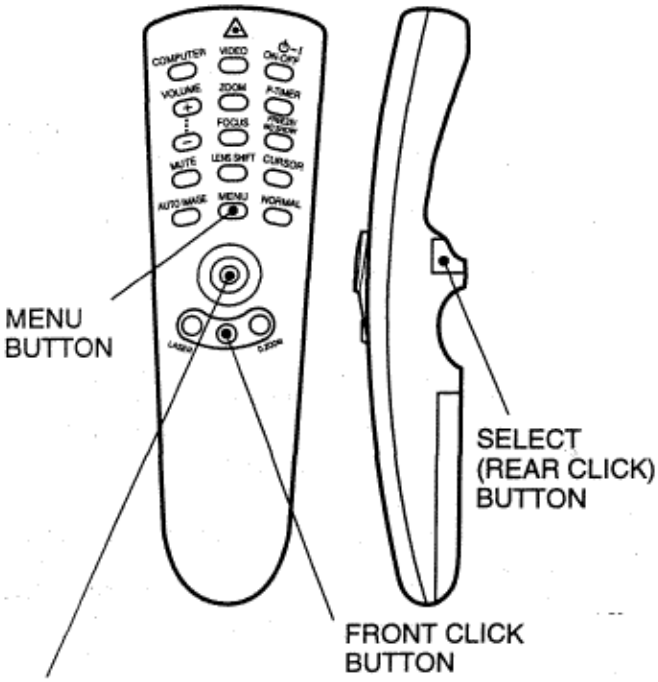

WIRELESS/WIRED REMOTE CONTROL UNIT

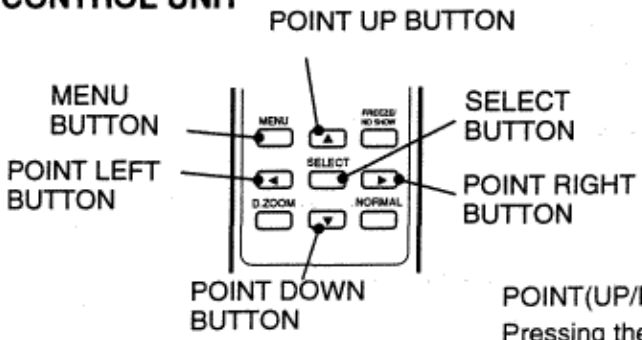

POINT(UP/DOWN/LEFT/RIGHT)BUTTON
Pressing the button upward, downward, leftward or rightward.

MODE SELECT

You can select a mode from MAIN MENU display among computer 1, computer 2, video 1, video 2.

1. Press the MENU BUTTON and the MAIN MENU DISPLAY dialog box will appear.
2. Press the POINT LEFT/RIGHT BUTTON(s) to select Computer or Video and press the SELECT (REAR CLICK) BUTTON. Another dialog box MODE DISPLAY will appear.
3. Press the POINT DOWN BUTTON and a red arrow will appear.
4. Move the arrow to the mode you want (computer 1, computer 2, video 1 or video 2) to use by pressing the POINT UP/DOWN BUTTON(s) and then press the SELECT (REAR CLICK) BUTTON.

MAIN MENU DISPLAY

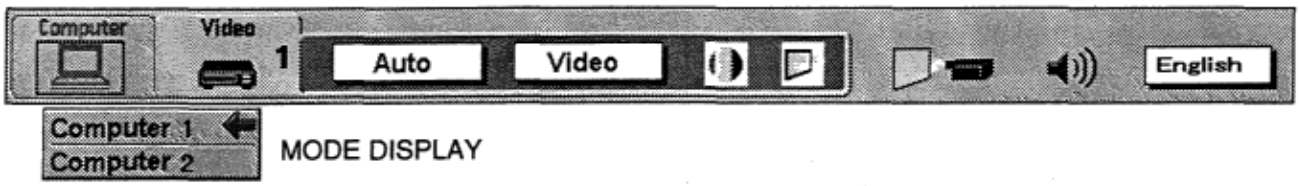

MODE DISPLAY

MAIN MENU DISPLAY

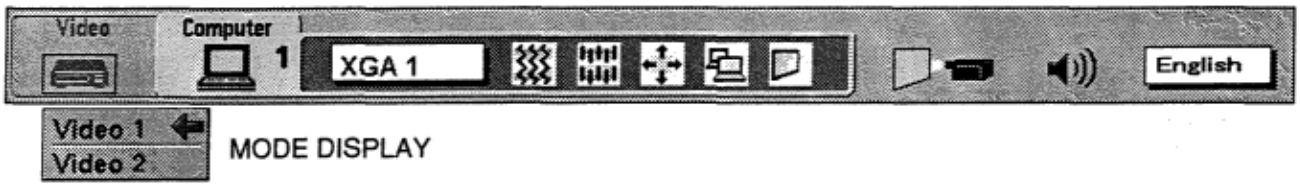

MODE DISPLAY

SOUND ADJUSTMENT

You can adjust the sound volume, treble, bass levels and Built-in SP., Sound Mute ON/OFF switch in the MENU display.

1. Press the MENU BUTTON and the MAIN MENU DISPLAY dialog box will appear.
2. Press the POINT LEFT/RIGHT BUTTON(s) to select SOUND and press the SELECT (REAR CLICK) BUTTON. Another dialog box SOUND ADJUST DISPLAY will appear.
3. Press the POINT DOWN BUTTON and a red arrow will appear.
4. Move the arrow to an item that you want to adjust by pressing the POINT UP/DOWN BUTTON(s).
5. To increase the sound volume, treble and bass, point the arrow to A and then press the SELECT (REAR CLICK) BUTTON. To decrease the sound volume, treble and bass, point the arrow to V and then press the SELECT (REAR CLICK) BUTTON.
6. To disconnect the built-in speaker, point the arrow to Built-in SP. and then press the SELECT (REAR CLICK) BUTTON. The display is changed Off and Internal speaker is disconnected.
7. To mute the sound, point the arrow to Mute and then press the SELECT (REAR CLICK) BUTTON. The display is changed On and mute the sound.
8. To quit the MENU, point to Quit and then press the SELECT (REAR CLICK) BUTTON.

MAIN MENU DISPLAY

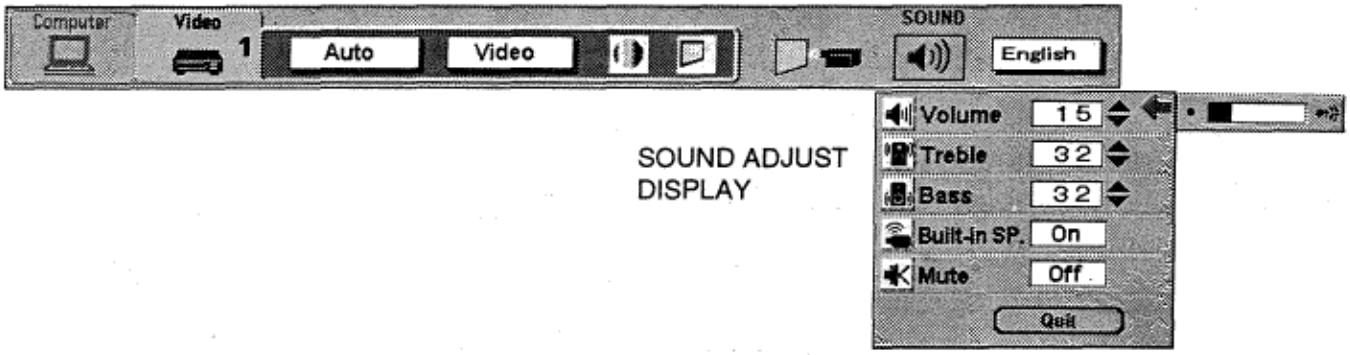

SOUND ADJUST DISPLAY

LANGUAGE ADJUSTMENT

A language in the MENU display can be selected among English, German, French, Italian, Spanish and Japanese.

1. Press the MENU BUTTON and the MAIN MENU DISPLAY dialog box will appear.
2. Press the POINT LEFT/RIGHT BUTTON(s) to select LANGUAGE and press the SELECT (REAR CLICK) BUTTON. Another dialog box LANGUAGE SETTING DISPLAY will appear.
3. Press the POINT DOWN BUTTON and a red arrow will appear.
4. Move the arrow to the language you want to use by pressing the POINT UP/DOWN BUTTON(s) and then press the SELECT (REAR CLICK) BUTTON.

MAIN MENU DISPLAY

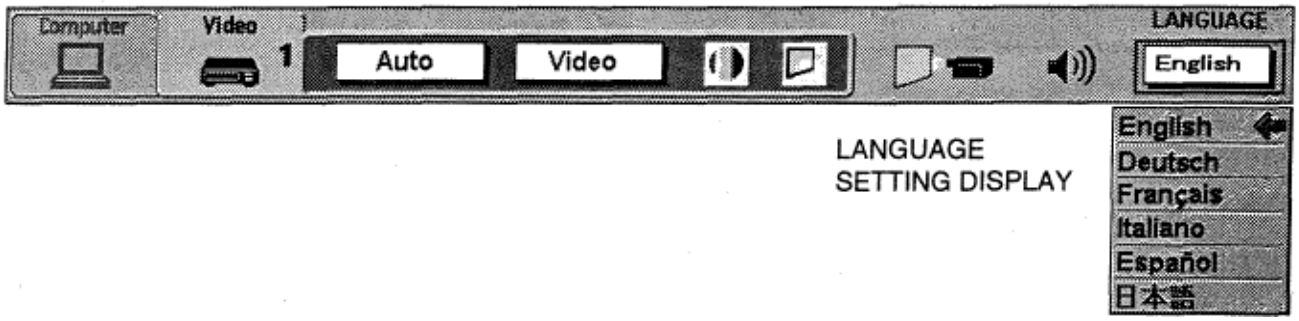

LANGUAGE SETTING DISPLAY

COLOR SYSTEM SELECT

This projector is compatible with the six major broadcast video standards: PAL, SECAM, NTSC, NTSC 4.43, PAL-M and PAL-N (COLOR SYSTEMs). When the color system is set to “Auto position”, this projector can detect one of 4 systems (PAL, SECAM, NTSC or NTSC 4.43) automatically. However, if the video signal is not strong enough to detect the video format, the projector may not reproduce the proper video image. In case this happens, this projector allows you to choose a specific broadcast signal format.

1. Connect the video equipment to the PROJECTOR and turn the projector on first.
2. Set MODE SELECT to “VIDEO MODE”.
3. Press the MENU BUTTON and the MAIN MENU DISPLAY dialog box will appear.

4. Press the POINT LEFT/RIGHT BUTTON(s) to select SYSTEM and press the SELECT (REAR CLICK) BUTTON. Another dialog box COLOR SYSTEM DISPLAY will appear. The current COLOR SYSTEM is displayed in the system window.
5. Press the POINT DOWN BUTTON and a red arrow will appear.
5. To change the current COLOR SYSTEM, press the POINT UP/DOWN BUTTON(s) to move the arrow to a desirable system and then press the SELECT (REAR CLICK) BUTTON.

MAIN MENU DISPLAY

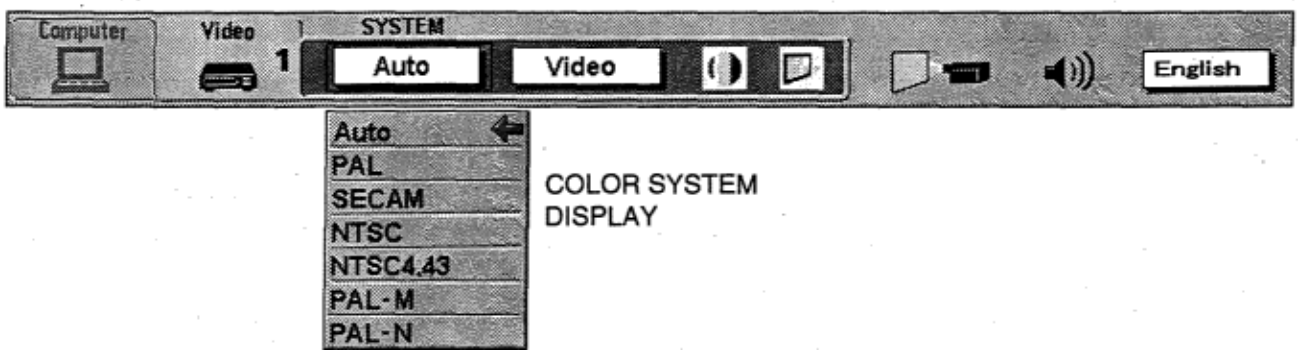

COLOR SYSTEM DISPLAY

VIDEO SOURCE SELECT

7. The setting changed remains effective until the MAIN ON/OFF switch is turned off.
1. Connect the video equipment to the PROJECTOR and turn the projector on first.
2. Set MODE SELECT to “VIDEO MODE”.
3. Press the MENU BUTTON and the MAIN MENU DISPLAY dialog box will appear.
4. Press the POINT LEFT/RIGHT BUTTON(s) to select VIDEO SOURCE and press -the SELECT (REAR CLICK) BUTTON. Another dialog box VIDEO SOURCE DISPLAY will appear. The current VIDEO SOURCE is displayed in the window.
5. Press the POINT DOWN BUTTON and a red arrow will appear.
6. To change the current VIDEO SOURCE, press the POINT UP/DOWN BUTTON(s) to move the arrow to a desirable video source and then press the SELECT (REAR CLICK) BUTTON.
7. The setting changed remains effective until the MAIN ON/OFF switch is turned oft.

MAIN MENU DISPLAY

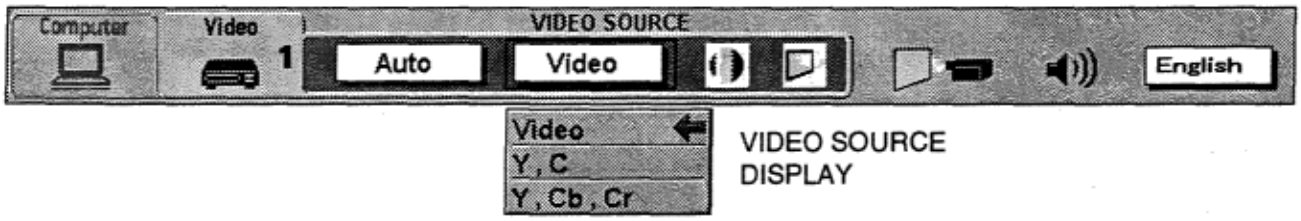

VIDEO SOURCE DISPLAY

PICTURE IMAGE ADJUSTMENT

Picture adjustments have been preset at the factory. If you want to change the setting, operate the projector as follows.

1. Press MENU BUTTON and the MAIN MENU DISPLAY dialog box will appear.
2. Press the POINT LEFT/RIGHT BUTTON(s) to select IMAGE and press the SELECT (REAR CLICK) BUTTON. Another dialog box IMAGE ADJUST DISPLAY will appear. This shows the current picture settings.
3. In this dialog box, you can adjust the settings by increasing or decreasing the levels shown as numbers. The items and the range of the levels that you can adjust are summarized in the table below.
4. Press the POINT DOWN BUTTON and a red arrow will appear.
5. Move the arrow to an item that you want to adjust by pressing the POINT UP/DOWN BUTTON(s).
6. To increase the level, point the arrow to A and then press the SELECT (REAR CLICK) BUTTON. To decrease the level, point the arrow to V and then press the SELECT (REAR CLICK) BUTTON.
7. You may want to store the settings in the memory so that you can recall them later. To store the settings, move the arrow to Stored and then press the SELECT (REAR CLICK) BUTTON. When you have stored the settings, "OK ?" is displayed for confirmation.
8. Move the arrow to Yes and then press the SELECT (REAR CLICK) BUTTON. The stored settings are memorized even if the MAIN ON/OFF is switched off.
9. To quit the MENU, move the arrow to Quit and then press the SELECT (REAR CLICK) BUTTON.
10. If you do not want to store the settings, move the arrow to Quit and then press the SELECT (REAR CLICK) BUTTON. The settings changed remains effective until the MAIN ON/OFF switch is turned off.
11. To recall the settings from the memory that you have stored, move the arrow to Reset and then press the SELECT (REAR CLICK) BUTTON. When you have reset the settings, "OK ?" is displayed for confirmation. Move the arrow to Yes and then press the SELECT (REAR CLICK) BUTTON. You can adjust the settings again if needed.

NOTE: "TINT" will be skipped in the PAL, SECAM, PAL-M and PAL-N mode

MAIN MENU DISPLAY

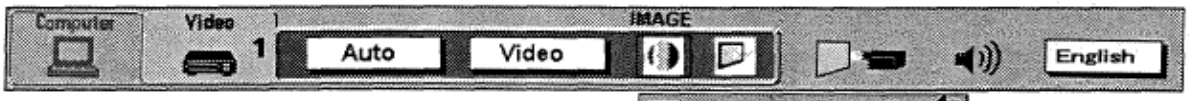

IMAGE ADJUST DISPLAY

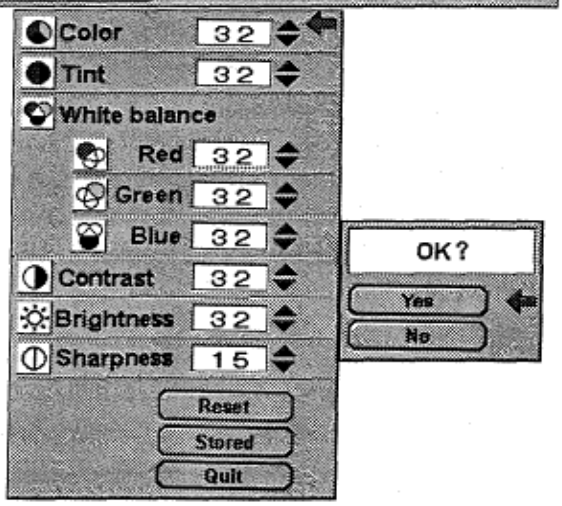

TABLE OF PICTURE IMAGE ADJUSTMENT

COLOR	DECREASES	0 ←→ 63 INCREASES
TINT	MORE PURPLE	0 ←→ 63 MORE GREEN
WHITE BALANCE (R/G/B)	DECREASES	0 ←→ 63 INCREASES
CONTRAST	LIGHTER	0 ←→ 63 DEEPER
BRIGHTNESS	DARKER	0 ←→ 63 BRIGHTER
SHARPNESS	SOFTER	0 ←→ 31 SHARPER

PICTURE SCREEN ADJUSTMENT

This projector has the Wide function, which enables you to view a wider video image.

WIDE function
This projector is able to project not only a normal video image (with 4 x 3 aspect ratio), but also a wider video image by
compressing 4 x 3 image. This feature enable you to enjoy watching pictures like cinema images. You can switch either to
WIDE or to REGULAR screen mode.

1. Press the MENU BUTTON and the MAIN MENU DISPLAY dialog box will appear.
2. Press the POINT LEFT/RIGHT BUTTON(s) to select SCREEN and press the SELECT (REAR CLICK) BUTTON. Another dialog box SCREEN ADJUST DISPLAY will appear.
3. Press the POINT DOWN BUTTON and a red arrow will appear.
4. To switch to “Wide” mode, move the arrow to Wide by pressing the POINT UP/DOWN BUTTON(s) and then press the SELECT (REAR CLICK) BUTTON.
5. To switch to “Regular” mode, move the arrow to Regular by pressing the POINT UP/DOWN BUTTON(s) and then press the SELECT (REAR CLICK) BUTTON.

MAIN MENU DISPLAY

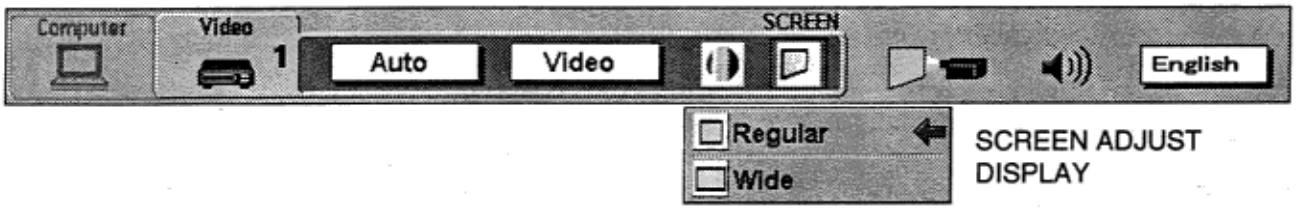

COMPUTER SYSTEM SELECT

This projector is adjustable to different types of computer display signals based on VGA, SVGA, XGA or SXGA (See "COMPATIBLE COMPUTER SPECIFICATIONS" on the next page). If you set MODE SELECT to "COMPUTER", the projector will automatically process the incoming signal and project the proper image without any special setting. Although this will work in most cases, you may be required to manually set the projector for some computer signals. If the computer image is not reproduced properly, try the following procedure and switch to the computer display mode that you want to use.

1. Connect the COMPUTER to the PROJECTOR and turn the projector on first.

2. Set MODE SELECT to "COMPUTER MODE (1 or 2)". This shows the current display mode initially detected by the projector in the system window. And "Current mode" display appears.

NOTE: 1. If the projector cannot discriminate or detect the input signal from the computer, the "Go PC adj." display appears.
NOTE : 2. If no input signal from the computer, the "No signal" display appears.
NOTE: 3. If the incoming signal is digital, the "D-VGA", "D-SVGA", "D-XGA" or "D-SXGA" display appears.

3. Press the MENU BUTTON and the MAIN MENU DISPLAY dialog box will appear.
4. Press the POINT LEFT/RIGHT BUTTON(s) to select SYSTEM and press the SELECT (REAR CLICK) BUTTON. Another dialog box COMPUTER SYSTEM DISPLAY will appear.
5. Press the POINT DOWN BUTTON and a red arrow will appear.
6. If you want to change the current display mode, move the arrow by pressing the POINT UP/DOWN BUTTON(s) to select one of the modes.
7. Press the SELECT (REAR CLICK) BUTTON to change the display mode.
8. To quit the MENU, move the arrow to Quit and then press the SELECT (REAR CLICK) BUTTON.

MAIN MENU DISPLAY

COMPUTER SYSTEM DISPLAY

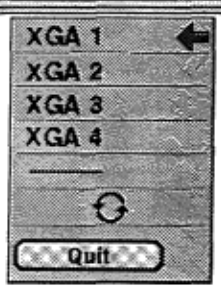

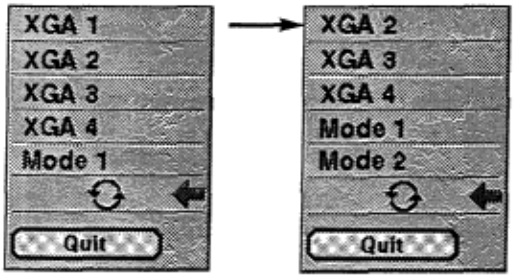

CURRENT MODE DISPLAY

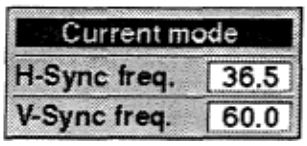

When the mark ( ) is displayed as BLACK, computer system mode will be available on the next page. Move an arrow to the mark ( ) and press the SELECT (REAR CLICK) BUTTON to show computer system mode described on the next page.

PC ADJUSTMENT

This is a special function that may be used when a computer image is not reproduced properly. (See the pages 45 - 48 for more detail.)

COMPATIBLE COMPUTER SPECIFICATIONS

ON-SCREEN DISPLAY	RESOLUTION	H-Freq. (kHz)	V-Freq. (Hz)
VGA1	640 x 480	31.47	59.88
VGA2	720 x 400	31.47	70.09
VGA3	640 x 400	31.47	70.09
VGA4	640 x 480	37.86	74.38
VGA5	640 x 480	37.86	72.81
VGA6	640 x 480	37.50	75.00
VGA7	640 x 480	43.269	85.00
MAC LC13	640 x 480	34.97	66.60
MAC13	640 x 480	35.00	66.67
SVGA1	800 x 600	35.156	56.25
SVGA2	800 x 600	37.88	60.32
SVGA3	800 x 600	46.875	75.00
SVGA4	800 x 600	53.674	85.06
SVGA5	800 x 600	48.08	72.19
SVGA6	800 x 600	37.90	61.03
SVGA7	800 x 600	34.50	55.38
SVGA8	800 x 600	38.00	60.51
SVGA9	800 x 600	38.60	60.31
SVGA10	800 x 600	32.70	51.09
SVGA11	800 x 600	38.00	60.51
MAC16	832 x 624	49.72	74.55
XGA1	1024 x 768	48.36	60.00
XGA2	1024 x 768	68.677	84.997
XGA3	1024 x 768	60.023	75.03
XGA4	1024 x 768	56.47	70.07
XGA5	1024 x 768	60.31	74.92
XGA6	1024 x 768	48.50	60.02
XGA7	1024 x 768	44.00	54.58
XGA8	1024 x 768	63.48	79.35
XGA9	1024 x 768	36.00	87.17 (Interlace)
XGA10	1024 x 768	62.04	77.07
XGA11	1024 x 768	61.00	75.70
XGA12	1024 x 768	35.522	86.96 (Interlace)
XGA13	1024 x 768	46.90	58.20

ON-SCREEN DISPLAY	RESOLUTION	H-Freq. (kHz)	V-Freq. (Hz)
XGA14	1024 x 768	47.00	58.30
XGA15	1024 x 768	58.03	72.00
MAC19	1024 x 768	60.24	75.08
SXGA1	1152 x 864	64.20	70.40
SXGA2	1280 x 1024	62.50	58.60
SXGA3	1280 x 1024	63.90	60.00
SXGA4	1280 x 1024	63.34	59.98
SXGA5	1280 x 1024	63.74	60.01
SXGA6	1280 x 1024	71.69	67.19
SXGA7	1280 x 1024	81.13	76.107
SXGA8	1280 x 1024	63.98	60.02
SXGA9	1280 x 1024	79.976	75.025
SXGA10	1280 x 960	60.00	60.00
SXGA11	1152 x 900	61.20	65.20
SXGA12	1152 x 900	71.40	75.60
SXGA13	1280 x 1024	50.00	86.00 (Interlace)
SXGA14	1280 x 1024	50.00	94.00 (Interlace)
SXGA15	1280 x 1024	63.37	60.01
SXGA16	1280 x 1024	76.97	72.00
SXGA17	1152 x 900	61.85	66.00
SXGA18	1280 x 1024	46.43	86.70 (Interlace)
SXGA19	1280 x 1024	63.79	60.18
SXGA20	1280 x 1024	91.146	85.024
MAC21	1152 x 870	68.68	75.06
MAC	1280 x 960	75.00	75.08
MAC	1280 x 1024	80.00	75.08
RGB	768 x 576	15.625	50.00 (Interlace)
RGB	640 x 480	15.734	60.00 (Interlace)
HDTV720p	1280 x 720	45.00	60.00
HDTV1035i	1920 x 1035	33.75	60.00 (Interlace)
HDTV1080i	1920 x 1080	33.75	60.00 (Interlace)

Specifications are subject to change without notice.

NOTE: Basically this projector can accept the signal from all computers with the above mentioned V, H-Frequency and less than 200 MHz of Dot Clock.

AUTO IMAGE FUNCTION

The Auto image function is provided to automatically adjust Fine sync., Total dots and Screen position for most computers.
NOTE: This auto image function will be skipped when the incoming signal is digital.

1. Press the MENU BUTTON and the MAIN MENU DISPLAY dialog box will appear.
2. Press the POINT LEFT/RIGHT BUTTON(s) to select AUTO IMAGE and press the SELECT (REAR CLICK) BUTTON. Another dialog box AUTO IMAGE SETTING DISPLAY will appear.
3. Press the POINT DOWN BUTTON and a red arrow will appear.
4. Move the arrow to an item(s) you want to adjust by pressing the POINT UP/DOWN BUTTON(s).
5. Change the setting "On" press the SELECT (REAR CLICK) BUTTON.
6. Move the arrow by pressing the POINT UP/DOWN BUTTON(s) to select "Go!" and then press the SELECT (REAR CLICK) BUTTON. The auto image function is started now. It will take about 10 seconds.
7. To store the settings, move the arrow to Stored and then press the SELECT (REAR CLICK) BUTTON. When you have stored the settings, "OK?" is displayed for confirmation.
8. Move the arrow to "Yes" and then press the SELECT (REAR CLICK) BUTTON. The stored settings are memorized even if the MAIN ON/OFF is switched oft.
9. To quit the MENU, point to Quit and then press the SELECT (REAR CLICK) BUTTON.
10. This setting is temporarily effective until you turn off the projector or change the input signal.

NOTE: The fine sync., total dots and screen position of some computers may not be fully adjusted with the "Auto Image Function." In that case, use the "Picture Image" and/or "Picture Position" adjustments (see pages 43 – 44) to make fine-adjust them after the "Auto Image Function" is executed.

MAIN MENU DISPLAY

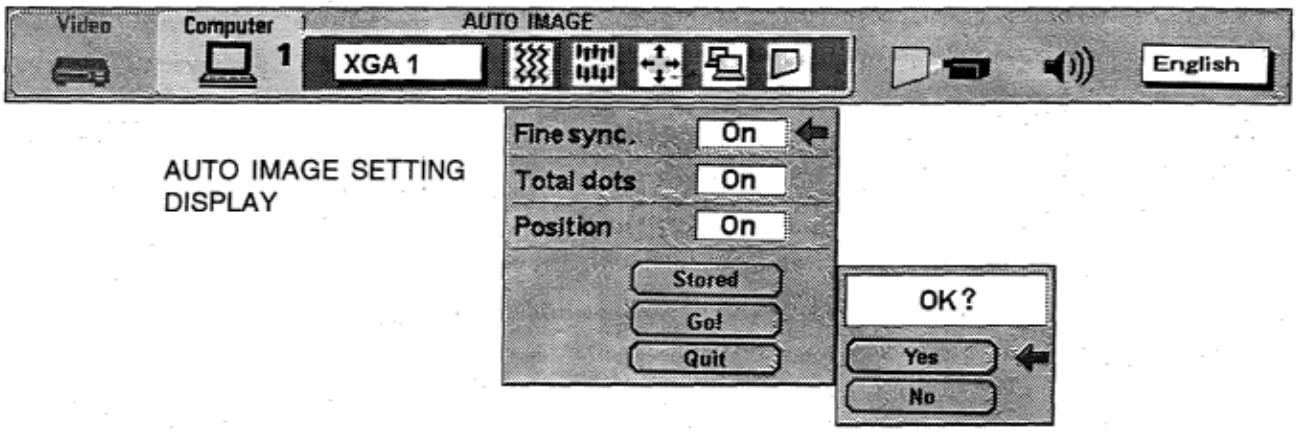

PICTURE IMAGE ADJUSTMENT

Picture adjustments have been preset at the factory. It you want to change the setting, operate th projector as follows

1. Press the MENU BUTTON and the MAIN MENU DISPLAY dialog box will appear.
2. Press the POINT LEFT/RIGHT BUTTON(s) to select IMAGE and press the SELECT (REAR CLICK) BUTTON. Another dialog box IMAGE ADJUST DISPLAY will appear. This shows the current picture settings.
3. In this dialog box, you can adjust the settings by increasing or decreasing the levels shown as numbers. The items and the range of the levels that you can adjust are summarized in the table below.
4. Press the POINT DOWN BUTTON and a red arrow will appear.
5. Move the arrow to an item that you want to adjust by pressing the POINT UP/DOWN BUTTON(s).
6. To increase the level, point the arrow to A and then press the SELECT (REAR CLICK) BUTTON. To decrease the level, point the arrow to V and then press the SELECT (REAR CLICK) BUTTON.
7. You may want to store the settings in the memory so that you can recall them later. To store the settings, move the arrow to Stored and then press the SELECT (REAR CLICK) BUTTON. When you have stored the settings, "OK ?" is displayed for confirmation.
8. Move the arrow to Yes and then press the SELECT (REAR CLICK) BUTTON. The stored settings are memorized even if the MAIN ON/OFF is switched oft.
9. To quit the MENU, move the arrow to Quit and then press the SELECT (REAR CLICK) BUTTON.
10. If you do not want to store the settings, move the arrow to Quit and then press the SELECT (REAR CLICK) BUTTON. The settings changed remains effective until the MAIN ON/OFF switch is turned off.
11. To recall the settings from the memory that you have stored, move the arrow to Reset and then press the SELECT (REAR CLICK) BUTTON. When you have reset the settings, "OK ?" is displayed for confirmation. Move the arrow to Yes and then press the SELECT (REAR CLICK) BUTTON. You can adjust the settings again if needed.

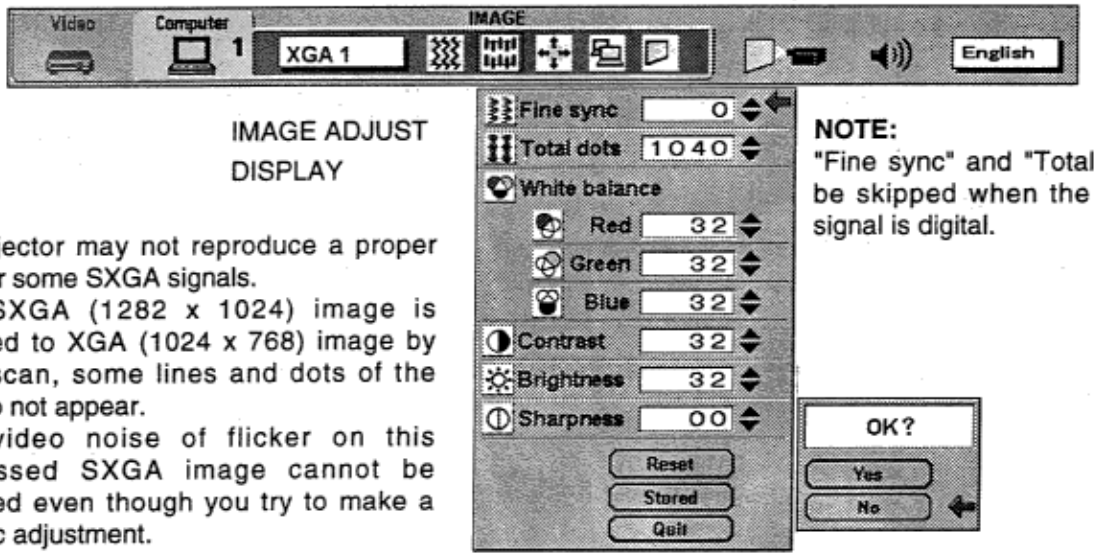

IMAGE ADJUST DISPLAY

NOTE:
The projector may not reproduce a proper image for some SXGA signals.
Since SXGA (1282 x 1024) image is converted to XGA (1024 x 768) image by partial scan, some lines and dots of the image do not appear.
Some video noise of flicker on this compressed SXGA image cannot be eliminated even though you try to make a Fine sync adjustment.

NOTE:
"Fine sync" and "Total dots" will be skipped when the incoming signal is digital.

TABLE OF PICTURE IMAGE ADJUSTMENT

FINE SYNC	Adjust the picture as necessary to eliminate flicker from the display.	0 ←→ 127	
TOTAL DOTS	The number of the total dots in one horizontal period. Adjust the number to match your PC image.		
WHITE BALANCE (R/G/B)	DECREASE	0 ←→ 63	INCREASE
CONTRAST	LIGHTER	0 ←→ 63	DEEPER
BRIGHTNESS	DARKER	0 ←→ 63	BRIGHTER
SHARPNESS	SOFTER	0 ←→ 31	SHARPER

PICTURE POSITION ADJUSTMENT

1. Press the MENU BUTTON and the MAIN MENU DISPLAY dialog box will appear.
2. Press the POINT LEFT/RIGHT BUTTON(S) to select POSITION and press the SELECT (REAR CLICK) BUTTON.
   Another dialog box POSITION SETTING DISPLAY will appear.
3. Press the POINT DOWN BUTTON and a red arrow will appear.
4. Move the arrow to a desirable direction (🡐,🡒,🡑,🡓) by pressing the POINT LEFT/RIGHT/UP/DOWN BUTTON(s) and press the SELECT (REAR CLICK) BUTTON to a desirable picture position.
5. You may want to store the settings to the memory so that you can recall them later. To store the settings, move the arrow to Stored and then press the SELECT (REAR CLICK) BUTTON. When you have stored the settings, “OK ?“ is displayed for confirmation.
6. Move the arrow to Yes and then press the SELECT (REAR CLICK) BUTTON. The stored settings are memorized even if the MAIN ON/OFF is switched off.
7. To quit the MENU, move the arrow to Quit and then press the SELECT (REAR CLICK) BUTTON.
8. If you do not want to store the settings, move the arrow to Quit and then press the SELECT (REAR CLICK) BUTTON. The settings changed remains effective until the MAIN ON/OFF switch is turned off.
9. To recall the settings from the memory that you have stored, move the arrow to Reset and then press the SELECT (REAR CLICK) BUTTON. When you have reset the settings, “OK ?“ is displayed for confirmation. Move the arrow to Yes and then press the SELECT (REAR CLICK) BUTTON. You can adjust the settings again if needed.

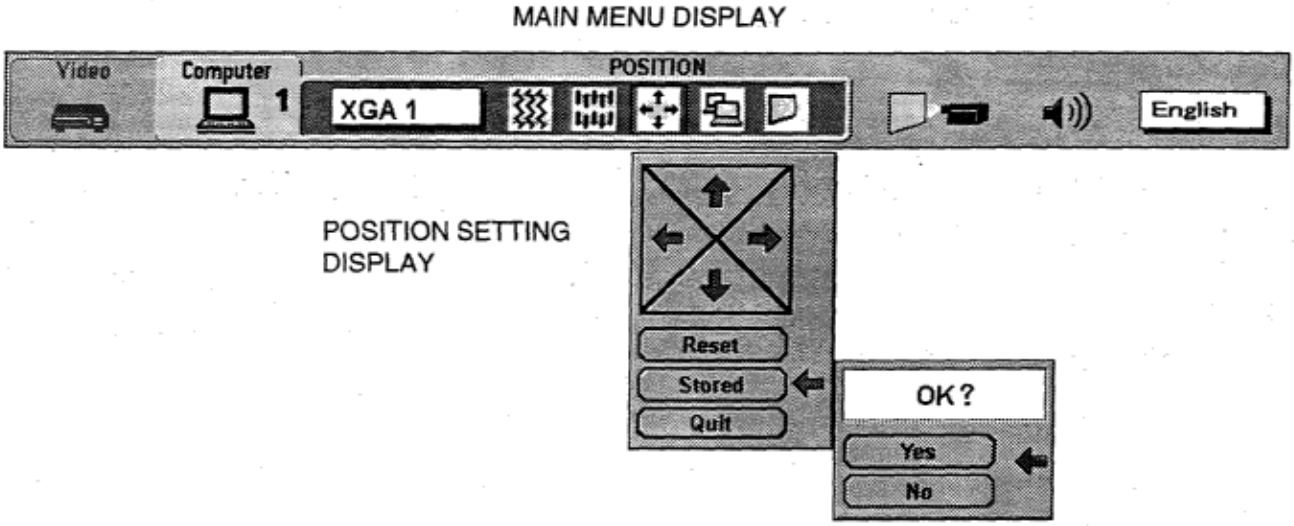

PC ADJUSTMENT

This function will be skipped when the incoming signal is digital.

This projector can automatically detect most display signals from most personal computers currently distributed. However, some computers adopt a special signal format which is different from the standard one and the projector cannot detect it. If this happens, the projector cannot reproduce a proper image. And a flickering picture, a non-synchronized picture, a non-centered picture or a skewed picture may be projected instead.

For those non-standard formats, this projector is provided with PC ADJUST, enabling you to precisely adjust several parameters to match with the input signal format. The projector has eight independent memory areas where you can store the parameter you have set. This enables you to recall the setting for a specific computer when you need it.

1. Press the MENU BUTTON and the MAIN MENU DISPLAY dialog box will appear.
2. Press the POINT LEFT/RIGHT BUTTON(s) to select PC ADJUST and press the SELECT (REAR CLICK) BUTTON. Another dialog box “Where to reserve” will appear.
3. In this dialog box, you will select one of the memory areas from among “Mode 1” to “Mode 8”. If parameters-have been previously set and stored in the memory, the status “Stored” will appear on the corresponding row. If not, “Free” will appear.
4. Press the POINT DOWN BUTTON and a red arrow will appear.
5. Move the arrow to one of the “Modes” (Free position) where you want to store the parameters by pressing the POINT UP/DOWN BUTTON(s). Press the SELECT (REAR CLICK) BUTTON to select it.

NOTE: If “Stored” appears in all Modes, no new PC parameter data can be stored. In this case, clear-the PC - parameter data using Mode free Function.

MAIN MENU DISPLAY

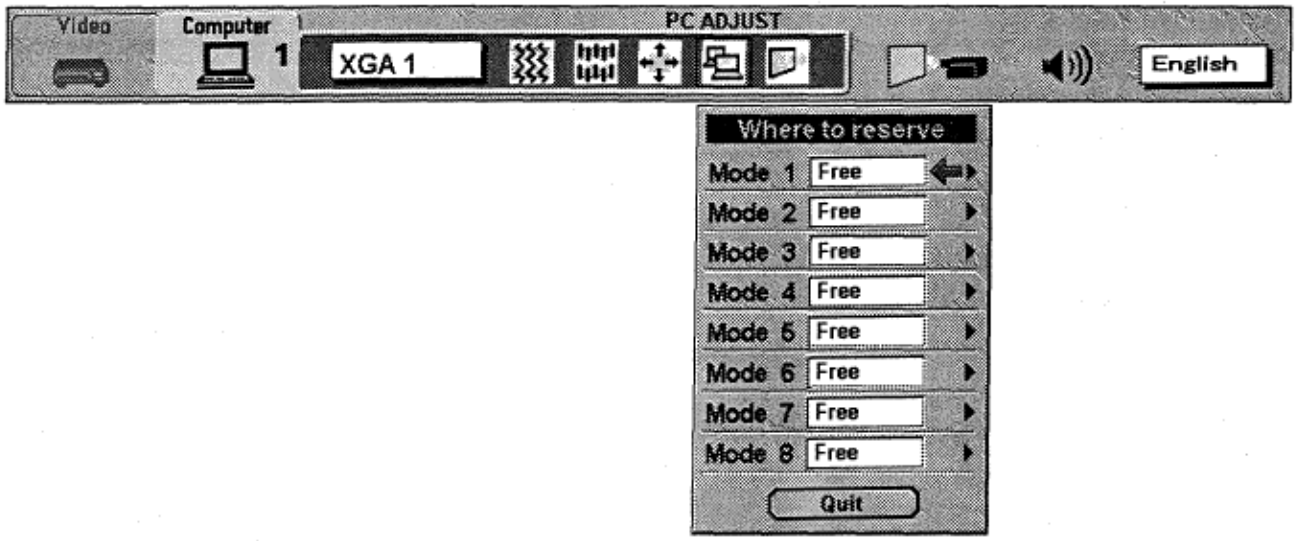

6. Another dialog box “PC ADJUSTMENT DISPLAY 1” will appear and the parameter data for the Mode you have selected is shown in this dialog box.
7. The parameters will be filled with the data determined by the projector according to the present signal input.
8. The function of the parameters and their values are summarized in the table as below.
9. Move the arrow to an item that you want to adjust by pressing the POINT UP/DOWN BUTTON(s).
10. To increase the level, point the arrow to ▲ and then press the SELECT (REAR CLICK) BUTTON. To decrease the level, point the arrow to ▼ and then press the SELECT (REAR CLICK) BUTTON.
11. If you want to store the settings in the memory, move the arrow to Stored and press the SELECT (REAR CLICK) BUTTON. When you have stored the settings, “OK ?”-is displayed for confirmation. Move the arrow to Yes and then press the SELECT (REAR CLICK) BUTTON.
12. To recall the parameter data before setting, move the arrow to Reset and then press the SELECT (REAR CLICK) BUTTON. When you have reset the settings, “OK ?” is displayed for confirmation. Move the arrow to Yes and then press the SELECT (REAR CLICK) BUTTON. You can adjust the settings again if needed.
13. To quit the MENU, move the arrow to Quit and then press the SELECT (REAR CLICK) BUTTON.
14. If you quit the MENU without storing the settings in the memory, the parameter data you changed will not be kept.
15. The stored settings are memorized even if the MAIN ON/OFF is switched oft. -
16. Adjust the data such as a “Clamp”, “Fine sync”, “Display area”, “Horiz. scale” and “Vert. scale” if needed, move the arrow by pressing the POINT UP/DOWN BUTTON(s) to select (▼). Press the SELECT (REAR CLICK) BUTTON.

MAIN MENU DISPLAY

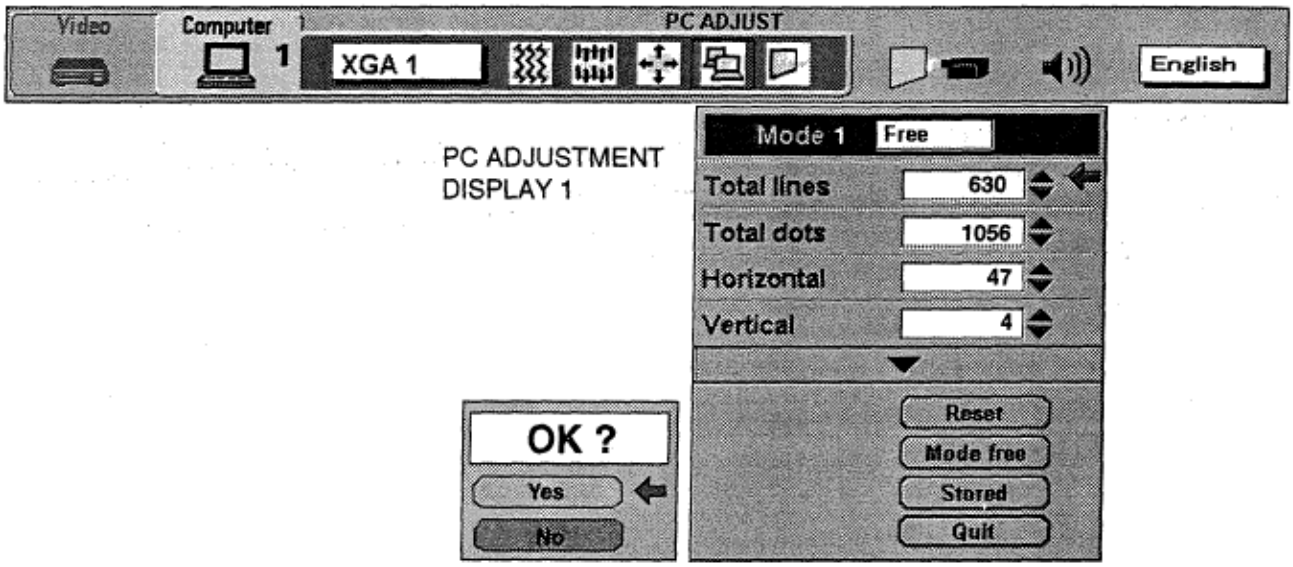

ITEM	FUNCTION
TOTAL LINES	The number of the total vertical lines. Adjust the number to match your PC image.
TOTAL DOTS	The number of the total dots in one horizontal period. Adjust the number to match your PC image.
HORIZONTAL	Adjustment of the horizontal picture position. When the image is not centered on the screen, adjust this.
VERTICAL	Adjustment of the vertical picture position. When the image is not centered on the screen, adjust this.

17. Another dialog box “PC ADJUSTMENT DISPLAY 2” will appear and the parameter data for the Mode you have selected is shown in this dialog box.

p18. Move the arrow to an item that you want to adjust by pressing the POINT UP/DOWN BUTTON(s).

19. To increase the level, point the arrow to ▲ and then press the SELECT (REAR CLICK) BUTTON. To decrease the level, point the arrow to ▼ and then press the SELECT (REAR CLICK) BUTTON.

20. If you want to store the settings in the memory, move the arrow to Stored and press the SELECT (REAR CLICK) BUTTON. When you have stored the settings, “OK ?“ is displayed for confirmation. Move the arrow to Yes and then press the SELECT (REAR CLICK) BUTTON.

21. To recall the parameter data before setting, move the arrow to Reset and then press the SELECT (REAR CLICK) BUTTON. When you have reset the settings, “OK ?“ is displayed for confirmation. Move the arrow to Yes and then press the SELECT (REAR CLICK) BUTTON. You can adjust the settings again if needed.

22. To quit the MENU, move the arrow to Quit and then press the SELECT (REAR CLICK) BUTTON.

23. If you quit the MENU without storing the settings in the memory, the parameter data you changed will not be-kept.

24. The stored settings are memorized even if the MAIN ON/OFF is switched off.

MAIN MENU DISPLAY

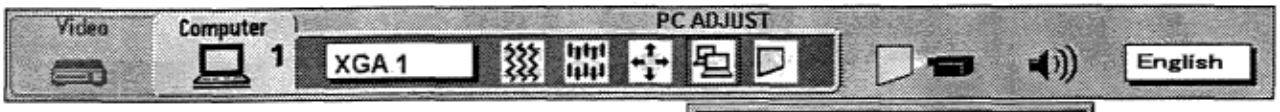

PC ADJUSTMENT DISPLAY 2

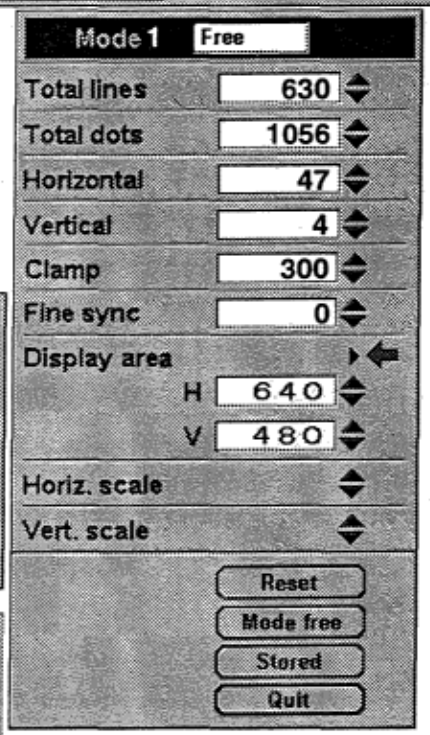

Adjust the display area, move the arrow by pressing the POINT UP/DOWN BUTTON(s) to select (▶) and press the SELECT (REAR CLICK) BUTTON.
Another dialog box "DISPLAY AREA DISPLAY" will appear.
Move the arrow to an item that you want to select display area by pressing the POINT UP/DOWN BUTTON(s) and press the SELECT (REAR CLICK) BUTTON.
Selected mode data will be displayed in H, V box.
To close dialog, move the arrow to "Quit" and press the SELECT (REAR CLICK) BUTTON.

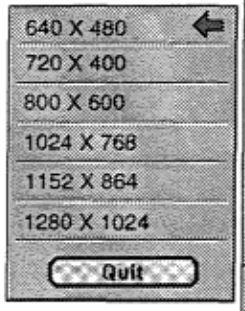

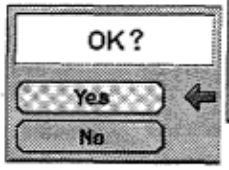

ITEM	FUNCTION
CLAMP	Adjustment of the clamp level. When the image has a dark bar, try this adjustment.
FINE SYNC	Adjust the picture as necessary to eliminate flicker from the display.
DISPLAY AREA	Adjustment the display area to match your PC.
HORIZ. SCALE	Expanding or compressing level for the horizontal direction.
VERT. SCALE	Expanding or compressing level for the vertical direction.

MODE FREE

The Mode free function is provided to confirm or clear the parameter data produced by PC ADJUST.

1. Press the MENU BUTTON and the MAIN MENU DISPLAY dialog box will appear.
2. Press the POINT LEFT/RIGHT BUTTON(s) to select PC ADJUST and press the SELECT (REAR CLICK) BUTTON. Another dialog box “Where to reserve” will appear.
3. Press the POINT DOWN BUTTON and a red arrow will appear.
4. Move the arrow to one of the “Modes” (Stored position) that you want to confirm by pressing the POINT UP/DOWN BUTTON(s). Press the SELECT (REAR CLICK) BUTTON. Another dialog box “PC ADJUSTMENT DISPLAY” will appear.
5. To quit the MENU, point to Quit and then press the SELECT (REAR CLICK) BUTTON.
6. To modify the parameter data, perform the steps 9 .24 of PC ADJUSTMENT SECTION.
7. To clear the parameter data, move the arrow by pressing the POINT UP/DOWN BUTTON(s) to select Mode free. Press the SELECT (REAR CLICK) BUTTON. “OK?” is displayed for confirmation.
8. Move the arrow to Yes and then press the SELECT (REAR CLICK) BUTTON to clear the parameter data.
9. To quit the MENU, move the arrow to Quit and then press the SELECT (REAR CLICK) BUTTON.

MAIN MENU DISPLAY

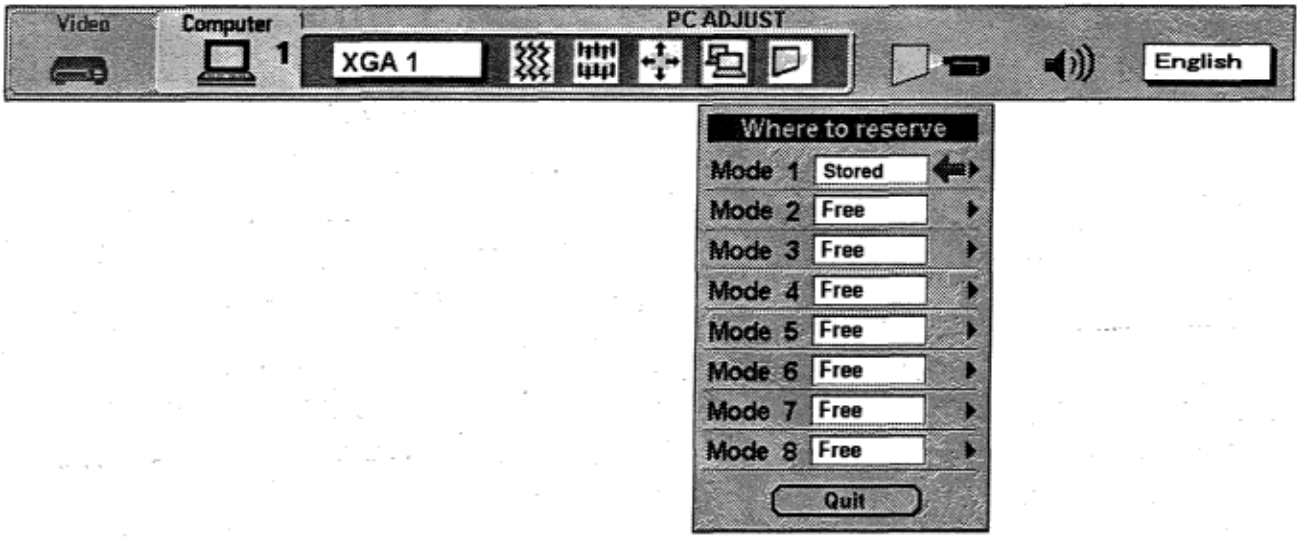

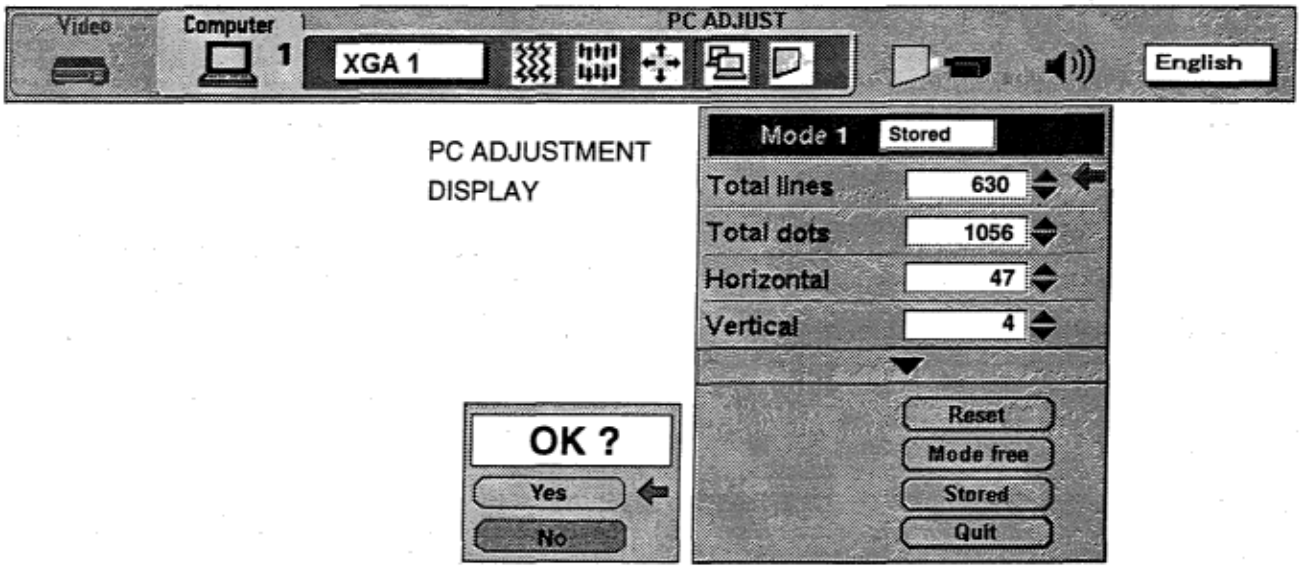

PICTURE SCREEN ADJUSTMENT

This projector can adjust the image size and pan the image with PICTURE SCREEN ADJUSTMENT.

1. Press MENU BUTTON and MAIN MENU DISPLAY dialog box will appear.
2. Press POINT LEFT/RIGHT BUTTON(s) to select SCREEN and press the SELECT (REAR CLICK) BUTTON. Another dialog box SCREEN ADJUST DISPLAY will appear.
3. Press POINT DOWN BUTTON and a red arrow will appear.

MAIN MENU DISPLAY

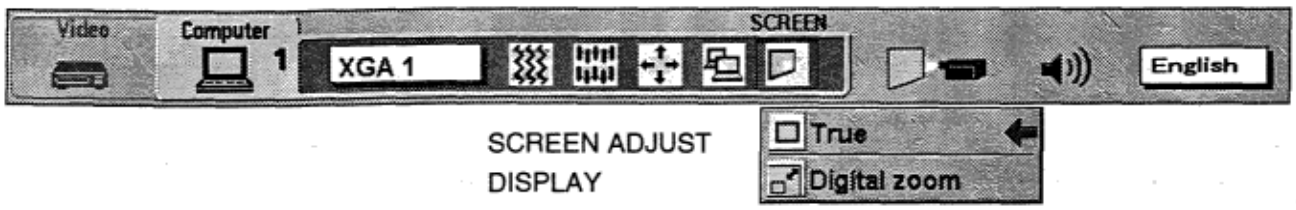

SCREEN ADJUST DISPLAY

4. To adjust the image size or pan the image, move the arrow to Digital zoom by pressin9 POINT UP/DOWN BUTTON(s) and then press SELECT (REAR CLICK) BUTTON. MAIN MENU DISPLAY and SCREEN ADJUST DISPLAY will disappear. The “D.zoom” and the magnifying-glass icon is displayed to indicate Digital zoom mode.

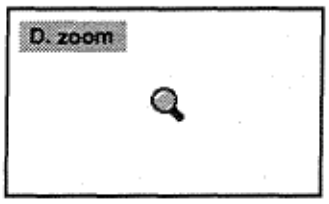

5. Move the magnifying-glass icon by pressing the POINT UP/DOWN/LEFT/RIGHT (POINTING PAD) BUTTON(s).
6. To expand the image, press SELECT (REAR CLICK) BUTTON. The image is magnified by degrees (Expand function).
7. To compress the image size, press FRONT CLICK button on the remote control.The size of image is reducedby degrees (Compress function).
8. To pan the image, press POINT UP/DOWN/LEFT/RIGHT (POINTING PAD) BUTTON(s) and move the magnifying-glass icon.
9. To cancel the Digital Zoom mode, press other buttons (Except NORMAL and CURSOR BUTTONS).

10. Press the NORMAL BUTTON in Digital zoom mode, the image size changed to the screen size (1024 x 768).
11. Press the CURSOR BUTTON in Digital zoom mode, the magnifying-glass icon is disappears on the screen. However, the Digital Zoom mode is held.
12. To turn the image size to true size (1024 x 768 in XGA or SXGA, 800 x 600 in SVGA and 640 x 480 in VGA), move the arrow to True by pressing POINT UP/DOWN BUTTON(s) and then press SELECT (REAR CLICK) BUTTON. The image size is turned to the true size.

- This projector cannot display in the resolution more than 1280 x 1024. If your computer’s screen resolution is higher than 1280 x 1024, reset the resolution to the lower.
- The image data of VGA (640 x 480), SVGA (800 x 600), or SXGA (1280 x 1024) is modified to fit the screen size in the initial mode.
- When the original image size is larger than the screen size (1024 x 768), this projector becomes Digital Zoom mode automatically.
- The maximum size in expand mode is 4 times as large as the original screen size. (When original image size is smaller than the screen size (1024 x 768).
- The minimum size in compress mode is the screen size (1024 x 768) in XGA or SXGA mode, 800 x 600 in SVGA mode or 640 x 480 in VGA mode.
- Panning function can work only when the image is expanded.
- The normal “Panning Operation” may not function properly if the computer system prepared with the “PC Adjust” is used.

Turn SPLIT WIPE function On in the SETTING menu. The picture will change into next one by sliding black image side ways when the input source is changed.

BLUE BACK (On or Off)

This projector has other functions setting: Blue back, Display, Reverse T/B, Reverse R/L, Split wipe, Power management, USB, Remote control and Lamp age.

DISPLAY (On or Off)

When this function is in the “On” position, the projector will project a blue image without video noise on the screen when the video source is unplugged or turned off.

When this function is in the “On” position, on-screen displays always appear when adjustments are made. Although these on-screen displays are very helpful, these may spoil the view if adjustments are made during presentations. To avoid this, you can keep back certain displays by switching this function “Off”. The followings are the displays that you can hide.

- Wait Display
- Mode Display
- Volume Display
- Mute Display
- Zoom/Focus/Lens shift Display
- D.Zoom Display
- Normal Display
- No show Display

REVERSE T/B (On or Off)

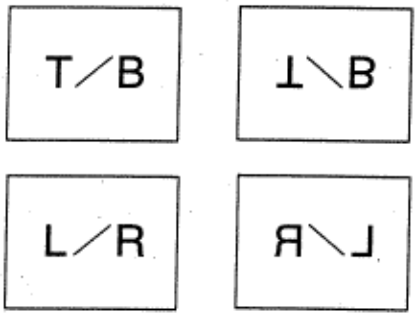

When this function is in the “On” position, the top/bottom-picture reverse.

REVERSE L/R (On or Off)

When this function is in the “On” position, the left/right picture reverse capability lets you project onto a rear projection screen.

SPLIT WIPE (On or Off)

Turn SPLIT WIPE function On in the SETTING menu. The picture will change into next one by sliding black image side ways when the input source is changed.
Change the input source by MODE button. The picture is replaced by black image from side ways to the center, and the next one appears from the center to side ways like drawing the black curtains.

POWER MANAGEMENT (On or Off)

Power management will be turn the projector Lamp off when the input signal is interrupted (Picture is not displayed) over 5 minutes. This aims at saving power and Lamp life. The Lamp is automatically turned on when the signal is input. To activate this function, turn the “Power management” in the SETTING menu “On”.

USB (Mouse or Control)

This Projector is designed for connecting with SUB Port of the computer or peripheral equipment that is to be standard.
When this function is in the “ ” (Mouse) position, you control the pointer of the computer using the projector’s wireless remote control unit.
When this function is in the “ ” (Control) position, you control the projector by computer.
NOTE: Before you control the projector by computer, install USB driver)optionally saled parts) and set up the computer following instruction in the USB driver package. Contact your authorized dealer.

REMOTE CONTROL CODE CHANGE (Mode 1 or Mode 2)

This projector can be operated with two different code, one is factory-set normal code (MODE 1) and the other one is extended code (MODE 2).
This is used to prevent the remote control operation mixture (jam) when two projector and several remote control video equipments are system-up and used together.
When you change the code MODE 2, you must change both projector and Remote Control Unit.

To change Projector code:
Set REMOTE CONTROL in SETTING menu (below figure) to "MODE 2".

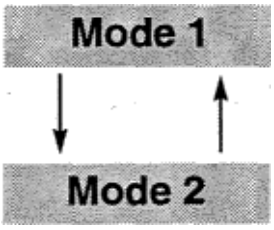

To change Remote Control Unit code
Press both "MENU" and "NORMAL" button on the Remote Control Unit for over 10 seconds.
After code changed, make sure the Remote Control operation is functioning properly.
To go back to normal code (MODE 1), take same operation above.

Setting the Blue back, Display, Reverse T/B, Reverse R/L, Split wipe, Power management, USB and Remote control

1. Press the MENU BUTTON and the MAIN MENU DISPLAY dialog box will appear.
2. Press the POINT LEFT/RIGHT BUTTON(s) to select SETTING and press the SELECT (REAR CLICK) BUTTON. Another dialog box SETTING DISPLAY will appear.
3. Press the POINT DOWN BUTTON and a red arrow will appear.
'4. Move the arrow to an item you want to set by pressing the POINT UP/DOWN BUTTON(s).
5. If you want to change the setting, press the SELECT (REAR CLICK) BUTTON.
6. To quit the MENU, point to Quit and then press the SELECT (REAR CLICK) BUTTON.
7. The settings are memorized even if the MAIN ON/OFF is switched off.

MAIN MENU DISPLAY

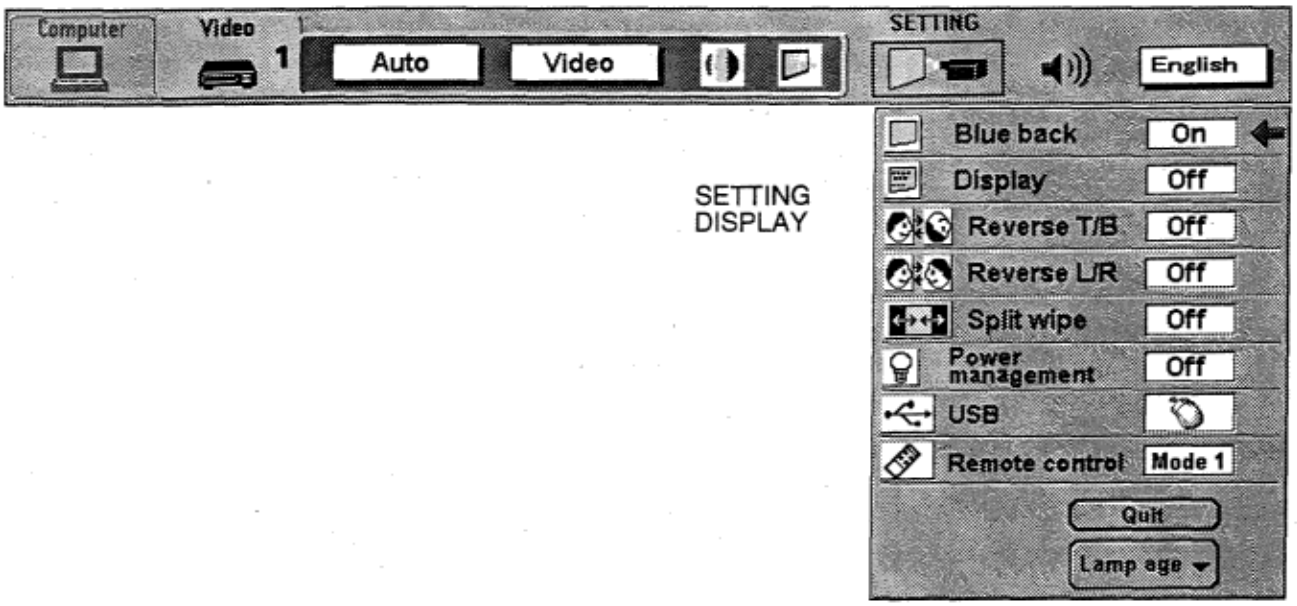

LAMP AGE

The Lamp age function is designed to reset the lamp replacement monitor timer. When replacing the lamp, reset the lamp

replacement monitor timer by using this function.

NOTE: Do not reset the LAMP REPLACEMENT MONITOR TIMER, except after the lamp is replaced.

1. Press the MENU BUTTON and the MAIN MENU DISPLAY dialog box will appear.
2. Press the POINT LEFT/RIGHT BUTTON(s) to select SETTING and press the SELECT (REAR CLICK) BUTTON.

Another dialog box SETTING DISPLAY will appear.

3. Press the POINT DOWN BUTTON and a red arrow will appear.
4. Move the arrow by pressing the POINT UP/DOWN BUTTON(s) to select Lamp age and then press the SELECT (REAR CLICK) BUTTON. When you reset the lamp replace monitor, “lamp replace monitor reset?” is displayed for confirmation.
5. Move the arrow to Yes and then press the SELECT (REAR CLICK) BUTTON, “OK?”is displayed for confirmation. Move the arrow to Yes and then press the SELECT (REAR CLICK) BUTTON, the lamp replace monitor is reset.
6. Move the arrow to No and then press the SELECT (REAR CLICK) BUTTON. The lamp replace monitor is not reset.
7. To quit the MENU, move the arrow to Quit and then press the SELECT (REAR CLICK) BUTTON.

MAIN MENU DISPLAY

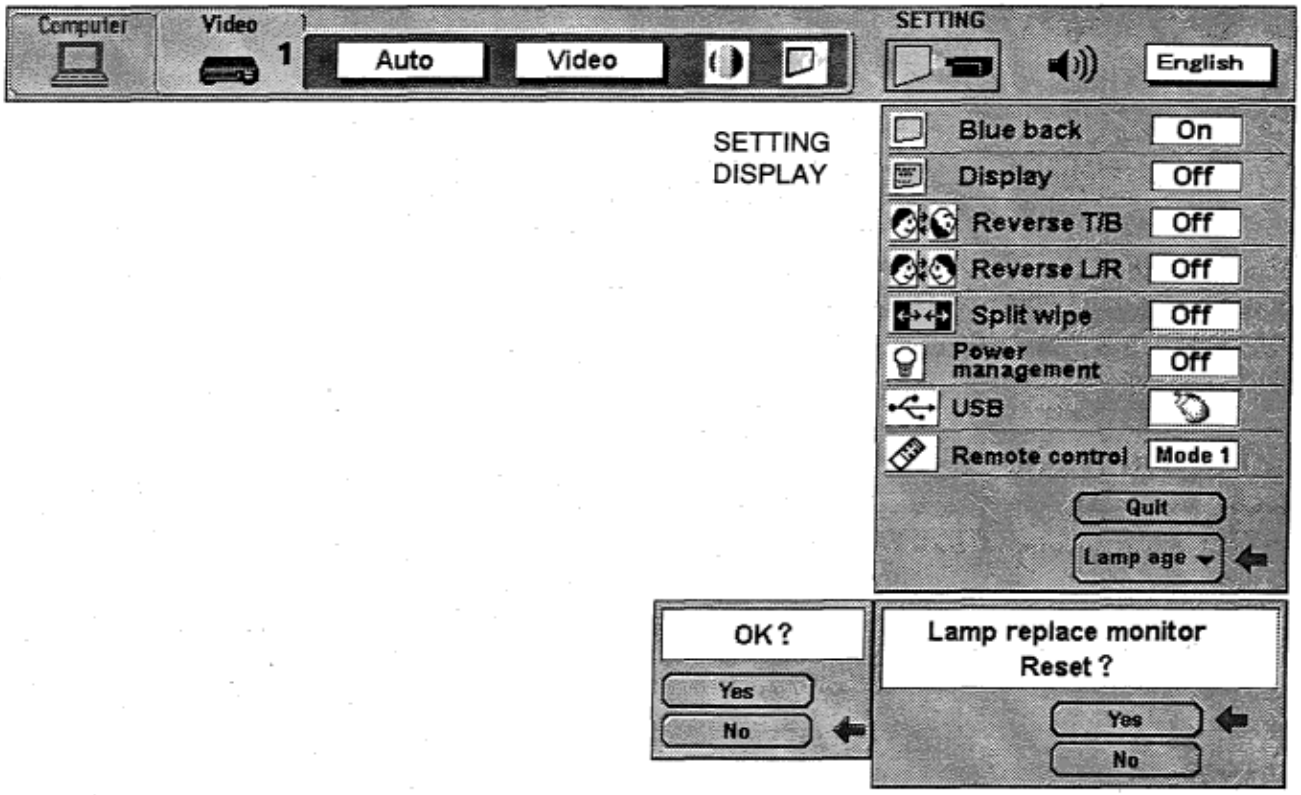

MAINTENANCE

TEMPERATURE WARNING INDICATOR

The TEMPERATURE WARNING INDICATOR flashes red when the internal
temperature of the projector exceeds the normal temperature.
Possible causes for the temperature warning may be:

1. Ventilation slots of the projector are blocked. In such an event, reposition the projector so that ventilation slots are not obstructed.
2. Air filter is clogged with dust particles. Remove dust from the air filter by following instructions in the Air Filter Care and Cleaning section above.

If the TEMPERATURE WARNING INDICATOR still continues to flash after checking (1) and (2), call your authorized dealer or service station.

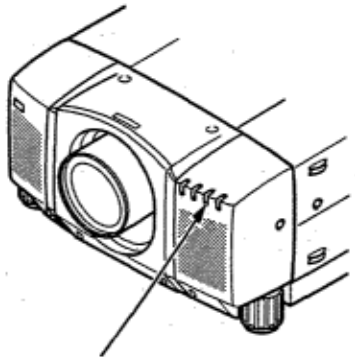

AIR FILTER CARE AND CLEANING

The removable air filter prevents dust from accumulating on the surface of the projection lens and projection mirror. Should the air filter become clogged with dust particles, it will reduce the cooling fan's effectiveness and may result in internal heat build up and reduce the life of the projector.

To clean the air filter, follow the cleaning procedures below:

1. Turn the POWER ON/OFF button OFF.
2. Remove the air filter cover.
3. Remove the air filter and sponge from the filter cover.
4. Clean the air filter with a vacuum cleaner.
5. Replace the air filter and sponge. Make sure that air filter cover is fully inserted.

Do not clean with water. Doing so may damage the air filter.
Do not operate the projector with air filter removed.

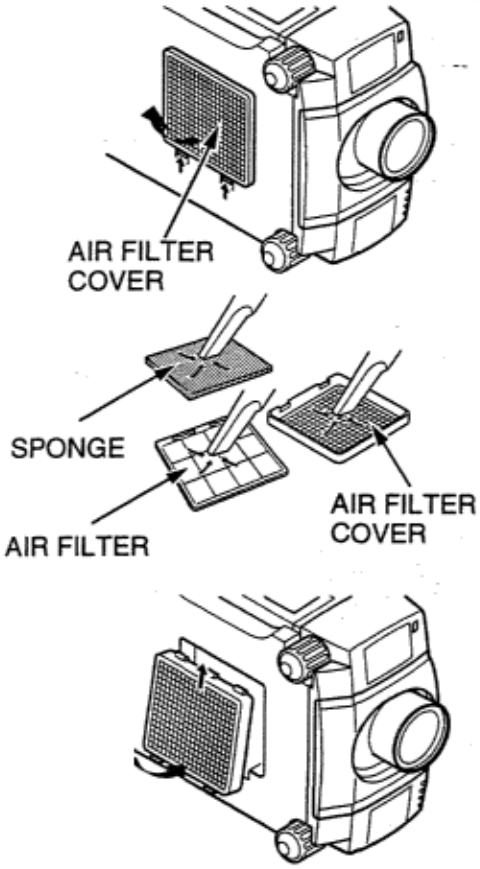

RECOMMENDATION

TO ENJOY PICTURE IMAGE, USE THE PROJECTOR IN THE CLEAN ENVIRONMENT. USAGE IN THE CLEAN ENVIRONMENT IS RECOMMENDED.

When used under the dusty or smoky conditions, dust may accumulate on the liquid crystal panel and lens inside it, and may resultantly be projected on the screen together with the picture. When the above symptoms are noticed contact the place where your authorized dealer or service station for the cleaning.

LAMP REPLACEMENT

WHEN THE PROJECTION LAMP OF THIS PROJECTOR DRAWS TO AN END,
THE LAMP REPLACEMENT INDICATOR LIGHTS YELLOW AND THE WARNING MESSAGE "LAMP REPLACEMENT" APPEARS AS THE RIGHT FIGURE. WHEN THE WARNING MESSAGE IS DISPLAYED, THE PROJECTION
LAMP SHOULD BE REPLACED.

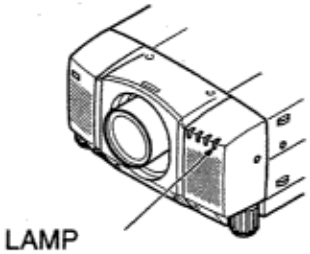

To terminate the warning message.
Replace the Projection Lamp and reset the LAMP REPLACEMENT MONITOR TIMER (See "LAMP AGE" section on page 52.), and the warning message is terminated.

To erase the warning message in a moment.
To erase the warning message for a moment, move the arrow to "YES" by pressing the POINT UP/DOWN BUTTON(s) and then press the SELECT (REAR CLICK) BUTTON. This procedure is temporary measure, and the warning massage appears again when the projector is turned on next time.

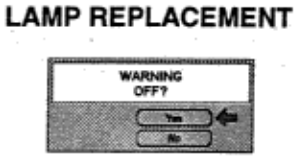

- **For continued safety, replace with a lamp assembly of the same type.**
- **Allow the projector to cool for at least 45 minutes before you open the lamp cover. The inside of the projector can become very hot.**
- **Do not drop the lamp module or touch the glass bulb The glass can shatter and cause injury.**

Follow these steps to replace the lamp assembly.
1. Turn off the projector and allow the projector to cool thoroughly.
2. Disconnect the AC cord from the projector.
3. Remove 2 screws with a screwdriver and remove the lamp cover.
4. Remove 2 screws with a screwdriver and pull out the lamp assembly by grasping the handle.
5. Replace the lamp assembly.
6. Tighten 4 screws to secure the lamp cover to the lamp assembly.
7. Connect the detachable AC cord to the projector.
8. Reset the lamp replacement monitor timer.
   (See "LAMP AGE" section on page 52.)

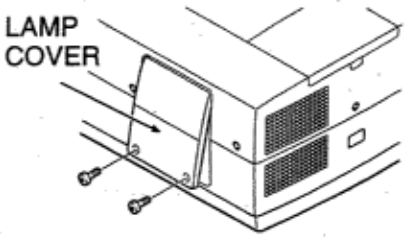

NOTE: Do not reset the LAMP REPLACEMENT MONITOR TIMER, except after the lamp is replaced.

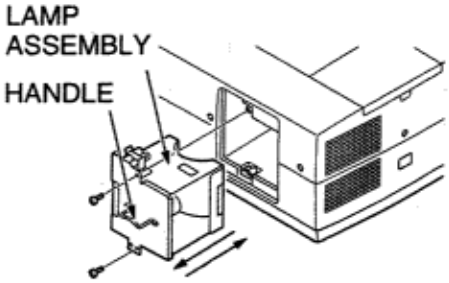

ORDER REPLACEMENT LAMP
Replacement Lamp can be ordered through your dealer. When ordering the Lamp, give the following information to the dealer.

- **Model No. of your projector : LC-X2U/X2UL**
- **Replacement Lamp Type No. : POA-LMP2OJ**
  (Service Parts No. 610 280 4225) -

CLEANING THE LENS

Follow these steps to clean the projection lens:

1. Apply a non-abrasive camera lens cleaner to a soft, dry cleaning cloth. Avoid using an excessive amount of cleaner.
   Abrasive cleaners, solvents or other harsh chemicals might scratch the lens.
2. Lightly wipe the cleaning cloth over the lens.
3. When you don't use the projector, replace the lens cover.

TROUBLESHOOTING

Before calling your dealer or service station for assistance, check the matters below once again.

1. Make sure you have connected the projector to your equipment as described in section "CONNECTING THE PROJECTOR" on pages 14- 21.
2. Check cable connections. Verify that all computer, video and power cords are properly connected.
3. Verify that power is switched on.
4. If the projector still does not display an image, re-start the computer.
5. If the image still does not display, unplug the projector from the computer and check the computer monitor's display. The problem may be with your graphics controller rather than with the projector. (When you reconnect the projector, remember to turn the computer and monitor off before you power up the projector. Power the equipment back up in order of:
   Projector and computer)
6. If the problem still exists, check the following chart.

Problem:	Try these Solutions:
No power	• Plug the projector into an AC outlet. •Turn the MAIN ON/OFF switch to ON. •Press the POWER ON/OFF switch to ON. •Be sure the READY INDICATOR light is ON. •Wait 90 seconds after the projector is turned OFF before turning the projector back on. NOTE: After pressing the POWER ON/OFF button to OFF. The projector functions as indicated. 1.The LAMP POWER indicator will light and the READY indicator will turn-off. 2.After 90 seconds, the READY indicator will light green again and the projector may be turned on by pressing the POWER ON/OFF button. •Check temperature warning indicator. If the indicator flashes red, the projector cannot be turned on. (See "BASIC OPERATION" section on page 32). •Check the projection lamp. •Replace the lamp cover. (Check the interlock switch inside of the lamp cover.)
Image is out of focus	~ Adjust the focus. • Make sure the projection screen is at least 4.9' (1.5 m) from the projector. • Check the projection lens to see if it needs cleaning. NOTE:: Moving the projector from a cool temperature location to a warm temperature location may result in moisture condensation on the lens. In such an event, leave the projector OFF and wait until condensation disappears.

Problem:	Try these Solutions:
Picture is T/B inverted,	Check Reverse T/B feature. (See “OTHER FUNCTION SETTING” section on pages 50
Picture is L/R Reversed.	Check Reverse L/R feature. (See “OTHER FUNCTION SETTING” section on pages 50 51).
Some displays are not seen during the operations	Check Display feature. (See “OTHER FUNCTION SETTING” section on pages 50 51).
No sound.	• Check audio cable connection from audio input source. • Adjust audio source. • Press the VOLUME (+) button. • Press the MUTE button.
Remote control unit doesn’t work.	• Check the batteries. • Make sure nothing is blocking between the remote control sensor and remote control unit. S • Make sure you are not too far from the projector when using the remote controlunit. {Maximum operate range 16.4(5 m)}. • Check the transmitted signal mode from the remote control unit. (See “OTHER FUNCTION SETTING” section on pages 50 — 51).
Wireless mouse function does not work.	• Check the cable connection between the projector-and the computer. • Check the mouse setting on your computer. - • Turn on the projector before you turn on the computer.

Projector Type	Multi-media Projector
Dimensions (W *x H x D)*	15.4” (390 mm) x 9.2” (234 mm) x 22.9” (582 mm)
Net Weight	39.2 lbs (17.8 kg)
LCD Panel System	1.8” TFT Active Matrix type x 3 panels
Number of Pixels	2,359,296 {786,432 (1,024 x 768) x 3}
Color System	6 color system (PAL, SECAM, NTSC, NTSC4.43, PAL-M and PAL-N)
Scanning Frequency	H-sync. 15 100 KHz, V-sync. 50 — 100 Hz
Projection Image Size (Diagonal)	Adjustable from 40” to 600”
Horizontal Resolution	800 TV lines
Projection Lens	F2.0 ~ 2.3 lens with f=75.7 mm - 97.5 mm Motor zoom and focus
Motorized Lens Shift	± 760 mm on 100” screen
Throw Distance	4.9’ (1.5 m) 80.7’ (24.6 m)
Projection Lamp	440 watt type
AV Input Jacks	BNC Type {Video/Y, C/Cb (B-Y), Cr (R-Y)} x 2 sets RCA Type (Audio A and L) x -2 sets and DIN 4 pin (S-Video) x 2 sets
Video Monitor Output Jack	BNC Type (Video/Y, C/Cb (B-Y),Cr (R-Y)} x 1 set and DIN 4 pin (S-Video) x 1 set
Audio Monitor 0utput Jacks	RCA Type (R and L) x 1 set RCA Type (R and L) x 1 set
Computer Input 1 Jack	MDR 20-pin Terminal (Digital), HDB ‘15-pin Terminal (Analog), Multi-pole 12-pin (Control port) and USB port
Computer Input 2 Jack	BNC Type (R, G, B, H and V), Multi-pole 12-pin (Control port) and USB port
Computer Audio Input Jack	RCA Type (A and L) x 2 sets
Computer Output Jack	HDB 15-pin Terminal
Computer Audio Output Jack	RCA Type (R and L) x 1 set
Other Jack	Wired Remote Jack and Serial port (DB 9)
Built-in Speaker	(2) 5 cm x 9 cm, Stereo (R and L), 3 watt (Music Power)
Image Elevation Adjustment	Up to 4°
Wattage	100 — 120 V AC, 50/60 Hz
Power Consumption	7.8 A (Max. Ampere)
Operating Temperature	5°C - 35°C
Storage Temperature	—10°C — 60°C
Remote Control Transmitters	Wireless Remote Control with Laser Beam (Class II Laser) Max. Output 1 mW/Wave Length 660 ± 2Onm, batteries (2) AA type.
	Wireless/Wired Remote Control, batteries (2) AA type.

This symbol on the nameplate means the product is Listed by Underwriters Laboratories Inc. It is designed and manufactured to meet rigid U.L. safety standards against risk of fire, casualty and electrical hazards.

EIKI

Audio Visual/Video Products

EIKI INTERNATIONAL, INC.
26794 Vista Terrace Drive, Lake Forest,
CA. 92630-8113, U.S.A.
TEL (949) 457-0200 FAX **(949)** 457-7878
IN **CANADA, EIKI CANADA**
865 Heritage Drive P.O. Box 156
Midland Ontario L4R 4K8 Canada
TEL *(705)* 527-4084 FAX (705) 527-4087

Printed in Japan
Part No. 610 280 7554 (1AA6P1 P1 950-- ME6B)

© 1999 Eiki International Inc.