USA's primary source for projector lamps
myprojectorlamps

PROJECTOR OWNER'S MANUAL

Eiki

LC-X1UL

Need a replacement lamp for this projector?

www.myprojectorlamps.com

Original manufacturer manual, provided unmodified as a courtesy of MyProjectorLamps.com.
All trademarks belong to their respective owners.

MULTIMEDIA PROJECTOR

MODEL LC-X1UA
LC-X1UL (Without Lens)

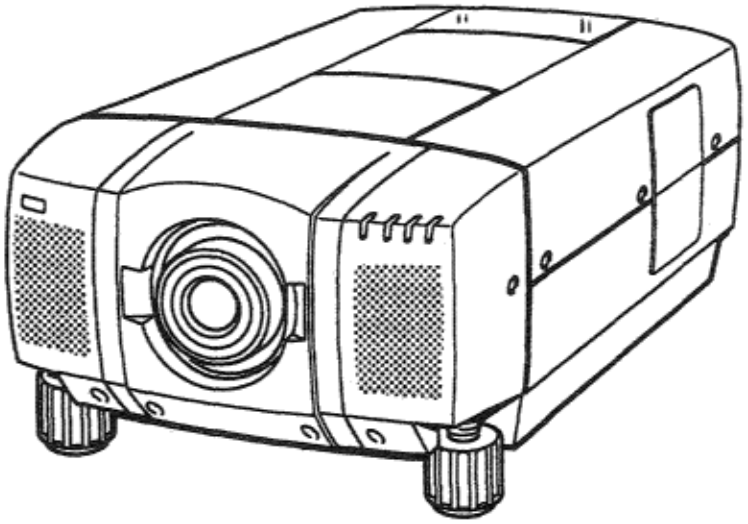

OWNER'S INSTRUCTION MANUAL

INFORMATION TO THE USER

NOTE: This equipment has been tested and found to comply with the limits for a Class A digital device, pursuant to Part 15 of the FCC Rules. These limits are designed to provide reasonable protection against harmful interference when the equipment is operated in a commercial environment, This equipment generates, uses, and can radiate radio frequency energy and, if not installed and used in accordance with the instruction manual, may cause harmful interference to radio communications. Operation of this equipment in a residential area is likely to cause harmful interference in which case the user will be required to correct the interference at his own expense.

SAFETY PRECAUTIONS

WARNING:
TO REDUCE THE RISK OF FIRE OR ELECTRIC SHOCK, DO NOT EXPOSE THIS APPLIANCE TO RAIN OR
MOISTURE.

The projector has a grounding-type AC line plug. This is a safety feature to be sure that the plug will fit into the power outlet. Do not try to defeat this safety feature,

Intense light source. Do not stare directly into the projection lens as possible eye damage could result. Be especially careful that children do not stare directly into the beam.

If the projector will not be used for an extended time, unplug the projector from the power outlet.

This Projector should be set in the way indicated. Never hang the projector, or fall down on its side, It may result in fire hazard,

READ AND KEEP THIS OWNER'S MANUAL FOR LATER USE.

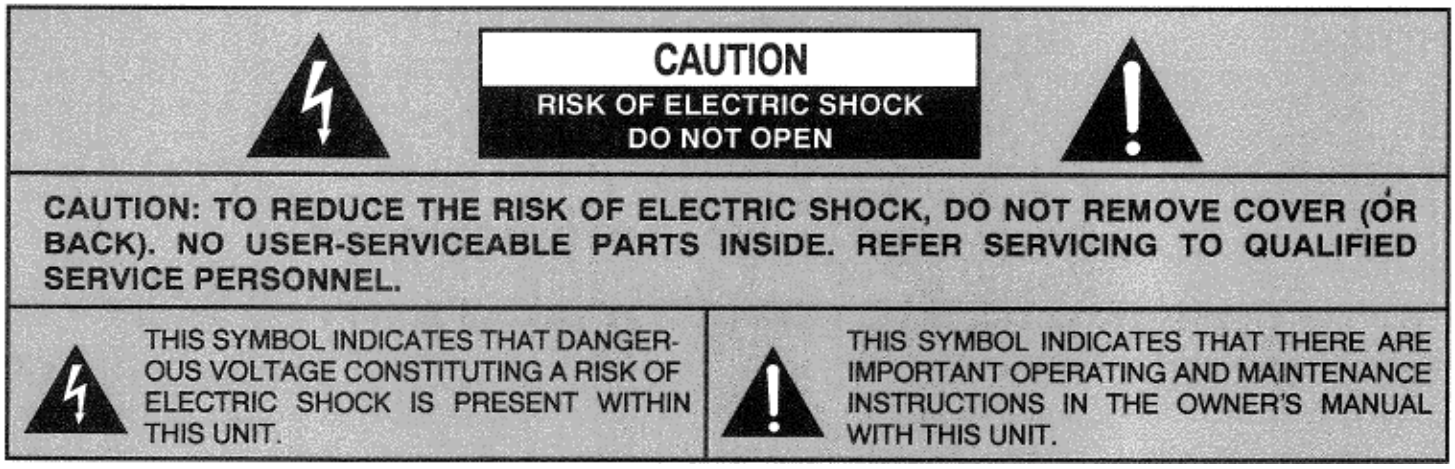

IMPORTANT:
For your protection in the event of theft or loss of this LC Data-Grade projector, please record the Model Number and Serial Number located on the rear of unit and retain this information. Refer to these numbers whenever you call upon your authorized dealer regarding this product.
Do not discard shipping carton and packing materials, These items may be needed for storage or future servicing.

Model No: LC-X1UA/X1UL

Serial No:_____

IMPORTANT SAFETY INSTRUCTIONS

All the safety and operating instructions should be read before the product is operated.

Read all of the instructions given here and retain them for later use. Unplug this projector from AC power supply before cleaning. Do not use liquid or aerosol cleaners. Use a damp cloth for cleaning.

Do not use attachments not recommended by the manufacturer as they may cause hazards.

Do not place this projector on an unstable cart, stand, or table. The projector may fall, causing serious injury to a child or adult, and serious damage to the projector. Use only with a cart or stand recommended by the manufacturer, or sold with the projector. Wall or shelf mounting should follow the manufacturer's instructions, and should use a mounting kit approved by the manufacturer.

Do not expose this unit to rain or use near water... for example, in a wet basement, near a swimming pool , etc...

Slots and openings in the back and bottom of the cabinet are provided for ventilation, to insure reliable operation of the equipment and to protect it from overheating.

The openings should never be covered with cloth or other material, and the bottom opening should not be blocked by placing the projector on a bed, sofa, rug, or other similar surface. This projector should never be placed near or over a radiator or heat register.

This projector should not be placed in a built-in installation such as a bookcase unless proper ventilation is provided.

This projector should be operated only from the type of power source indicated on the marking label. If you are not sure of the type of power supplied, consult your authorized dealer or local power company.

Do not overload wall outlets and extension cords as this can result in fire or electric shock. Do not allow anything to rest on the power cord. Do not locate this projector where the cord may be damaged by persons walking on it.

Never push objects of any kind into this projector through cabinet slots as they may touch dangerous voltage points or short out parts that could result in a fire or electric shock. Never spill liquid of any kind on the projector.

Do not attempt to service this projector yourself as opening or removing covers may expose you to dangerous voltage or other hazards. Refer all servicing to qualified service personnel.

Unplug this projector from wall outlet and refer servicing to qualified service personnel under the following conditions:

a. When the power cord or plug is damaged or frayed.

b, If liquid has been spilled into the projector.

c. If the projector has been exposed to rain or water.

d. If the projector does not operate normally by following the operating instructions. Adjust only those controls that are covered by the operating instructions as improper adjustment of other controls may result in damage and will often require extensive work by a qualified technician to restore the projector to normal operation.

e. If the projector has been dropped or the cabinet has been damaged.

f. When the projector exhibits a distinct change in performance-this indicates a need for service.

When replacement parts are required, be sure the service technician has used replacement parts specified by the manufacturer that have the same characteristics as the original part. Unauthorized substitutions may result in fire, electric shock, or injury to persons.

Upon completion of any service or repairs to this projector, ask the service technician to perform routine safety checks to determine that the projector is in safe operating condition.

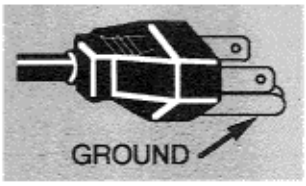

This projector is equipped with a grounding type AC line plug. Should you be unable to insert the plug into the outlet, contact your electrician. Do not defeat the safety purpose of this grounding type plug.

Follow all warnings and instructions marked on the projectors.

For added protection to the projector during a lightning storm, or when it is left unattended and unused for long periods of time, unplug it from the wall outlet. This will prevent damage due to lightning and powerline surges.

An appliance and cart combination should be moved with care. Quick stops, excessive force, and uneven surfaces may cause the appliance and cart combination to overturn.

If the projector is to be built into a compartment or similarly enclosed, the minimum distances must be maintained.

Do not cover the ventilation slot on the projector.

Heat build-up can reduce the service life of your projector, and can also be dangerous.

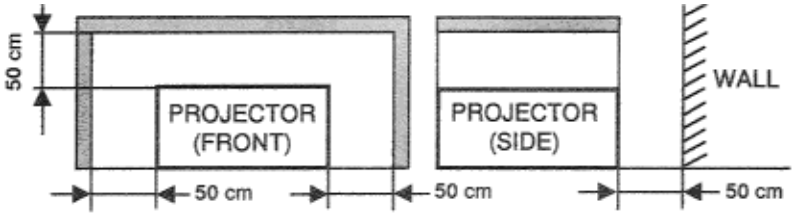

TABLE OF CONTENTS

	PAGE
INTRODUCTION	5
COMPATIBILITY	5
IMAGE RESOLUTION	5
UNPACKING THE PROJECTOR	5
TRADEMARKS	5
POWER REQUIREMENT	5
DESCRIPTION	6
SETTING-UP THE PROJECTOR	7-8
POSITIONING	7
ROOM LIGHT	7
LEVELING AND ELEVATING ADJUSTMENTS	7
VENTILATION	8
MOVING THE PROJECTOR	8
CONNECTING THE PROJECTOR	9-16
CONNECTING THE COMPUTER	9-14
Connecting an IBM-compatible desktop computer	11
Connecting a Macintosh desktop computer	12
Connecting an IBM-compatible laptop computer	13
Connecting a Macintosh PowerBook computer	14
CONNECTING THE VIDEO EQUIPMENT	15-16
OPERATION OF CONTROLS	17-20
TOP OF THE PROJECTOR	17-18
SIDE OF THE PROJECTOR	19-20
OPERATION OF REMOTE CONTROL	21-25
WIRELESS REMOTE CONTROL UNIT	21-23
WIRELESS/WIRED REMOTE CONTROL UNIT	24-25
CONTROL THE PROJECTOR	26-28
DIRECT OPERATION	26
MENU OPERATION	27-28
USING THE PROJECTOR	29-49
TO TURN ON THE PROJECTOR	29
TO TURN OFF THE PROJECTOR	29
DIRECT OPERATION	29
MODE SELECT	29
SOUND VOLUME ADJUSTMENT	30
SOUND MUTE FUNCTION	30
ZOOM ADJUSTMENT	30
FOCUS ADJUSTMENT	30
LENS SHIFT FUNCTION	30
NORMAL PICTURE FUNCTION	30
NO SHOW FUNCTION	30
P-TIMER FUNCTION	30
FREEZE PICTURE FUNCTION	30
AUTO IMAGE FUNCTION	30
MENU OPERATION	31-47
MODE SELECT	31
SOUND ADJUSTMENT	32
LANGUAGE ADJUSTMENT	32
MENU EXIT	33
COLOR SYSTEM SELECT	33
VIDEO SOURCE ADJUSTMENT	34
PICTURE IMAGE ADJUSTMENT	35
PICTURE SCREEN ADJUSTMENT	36
COMPUTER SYSTEM SELECT	37
COMPATIBLE COMPUTER SPECIFICATION	38
AUTO IMAGE FUNCTION	39
PICTURE IMAGE ADJUSTMENT	40
PICTURE POSITION ADJUSTMENT	41
PC ADJUSTMENT	42-45
PICTURE SCREEN ADJUSTMENT	46
OTHER FUNCTION SETTING	47-49
BLUE BACK	47-48
DISPLAY	47-48
REVERSET/B	47-48
REVERSE L/R	47-48
SPLIT WIPE	47-48
LAMPAGE	49
AIR FILTER CARE AND CLEANING	50
TEMPERATURE WARNING INDICATORS	50
LAMP REPLACEMENT	51
CLEANING THE LENS	52
TROUBLESHOOTING	52-53
TECHNICAL SPECIFICATIONS	54

INTRODUCTION

The multimedia projector that combines powerful and sophisticated features with easy-to-use, intuitive controls. Built-in multimedia features include audio, a palette of 16.77 million colors and active matrix liquid crystal display (LCD) technology. The projector is ideal for high-performance business, training and imaging applications that demand exceptional cob quality

COMPATABILITY

The projector is compatible with many different types of personal computers and video devices, including;

•IBM-compatible computers, including laptops, up to 1280 x 1024 resolution.
•Apple Macintosh and PowerBook computers up to 1280 x 1024 resolution.
•Various VCRs video disc players, video cameras, DVD players, satellite TV tuners or other AV equipment using any of the worldwide video standards, including NTSC, NTSC4.43, PAL, PAL-M, PAL-N and SECAM.

IMAGE RESOLUTION

The resolution of the projector's projected image is 1024 x 768. The projector displays computer images just as they appear on your computer's monitor. Screen resolutions between 1024 X 768 and 1280 X 1024 are compressed to 1024 x 768 the projector cannot display screen resolutions above 1280 X 1024. If your computer's screen resolution is higher than 1280 x 1024, reset it to a lower resolution before you connect the projector.

UNPACKING THE PROJECTOR

The projector comes with the parts listed below. Check to find all the parts are included. If any parts are missing, contact an authorized dealer or service station.

• Owner's Manual.
•AC Power Cord.
• Remote Control Transmitter Unit (Two Types) and batteries.
• Lens Cover.
• Protective Dust Cover.
•VGA Cable.
•VGA/MAC Adapter.
• Mouse Cable for PS/2 port.
• Mouse Cable for ser a port.
• Mo se Cable for ADB ort.

TRADEMARKS

- Apple, Macintosh, and PowerBooks are trademarks or registered trademarks of Apple Computer, Inc.
- IBM and PS/2 are trademarks or registered trademarks of International Business Machines, Inc.

POWER REQUIREMENTS

Your projector uses nominal input voltages of 100-120 VAC. The projector automatically selects the correct input voltage. The projector is designed to work with single-phase power systems having a grounded neutral conductor. To reduce the risk of electrical shock, do not plug into any other type of power system. Consult your authorized dealer or service station if you are not sure what type of power is supplied to your building.

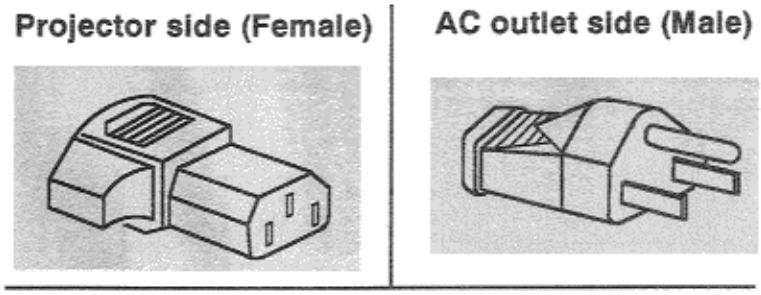

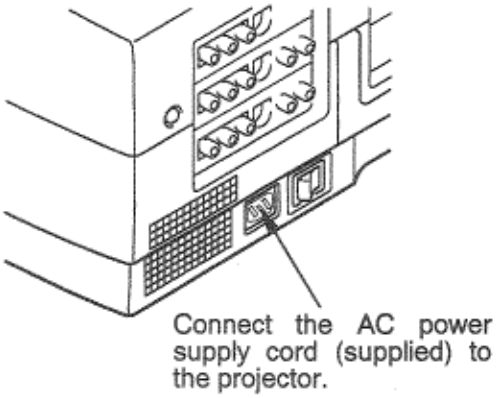

DESCRIPTION

FRONT

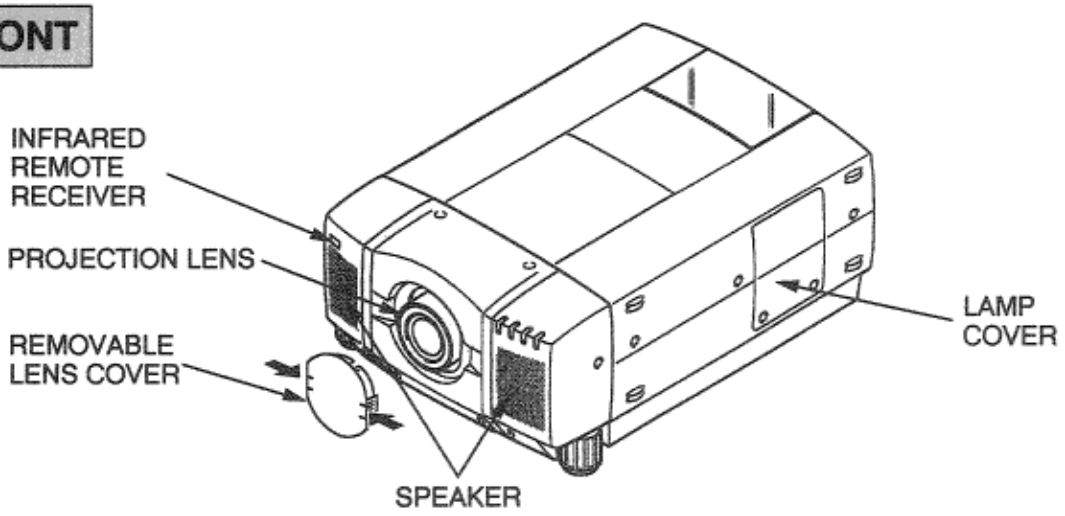

REAR

EXHAUST VENT

CAUTION HOT AIR !
Air blown from the exhaust vent is hot. Observe the following when handling your projector or choosing a location to install it.

- Keep heat-sensitive objects away from the exhaust port.
- If you set the projector on top of a metallic surface, the surface will become hot because of the hot air exhaust. Be careful when handling.
- Do not touch the cabinet near to the exhaust vent area, and especially screws and metallic parts. These parts will become hot while the projector is used.

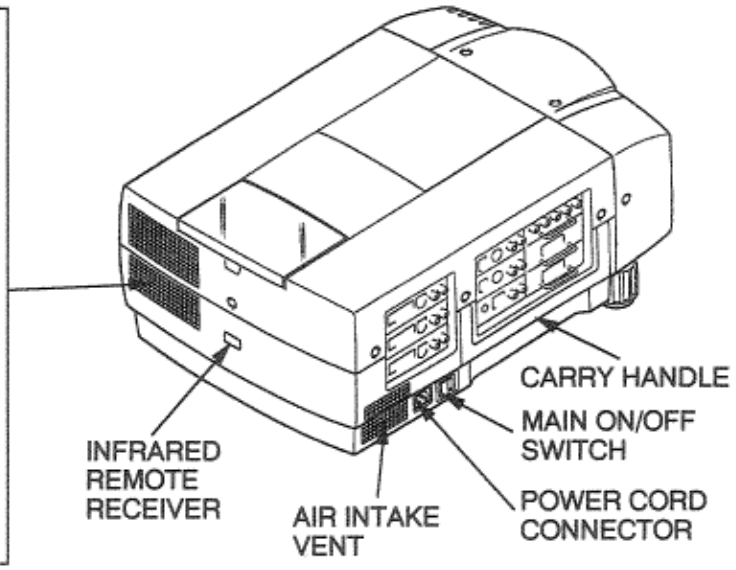

BOTTOM

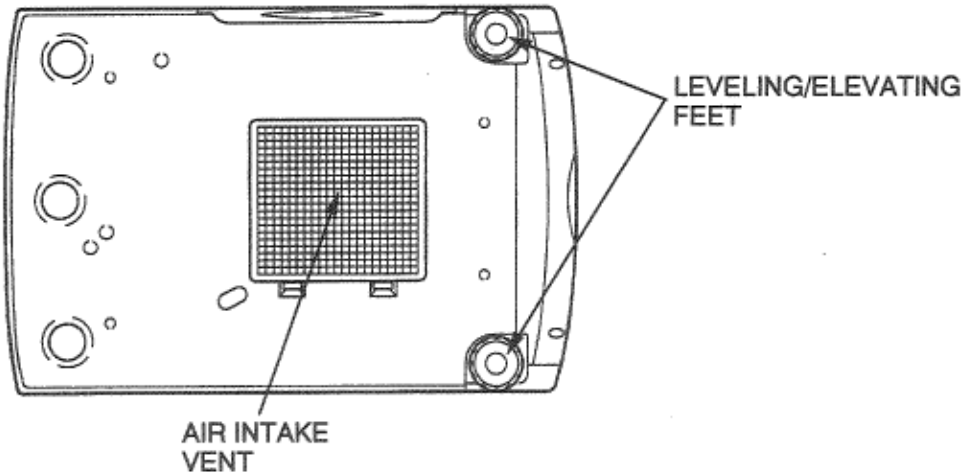

SETTING-UP THE PROJECTOR

POSITIONING;

- **This projector is basically designed to project on a flat projection surface.**
- **This projector can be focused from 3.6' (1.1 m) 73.2' (22.3m).**
- **Refer to the figure below as an example when positioning the projector to the screen.**

THIS PROJECTOR SHOULD BE SET IN THE WAY INDICATED. NEVER HANG THE PROJECTOR, OR FALL DOWN ON ITS SIDE. IT MAY RESULT IN FIRE HAZARD.

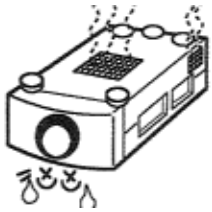

ROOM LIGHT

The projector should be placed in a room with limited light. Picture quality will be directly affected by lighting conditions.

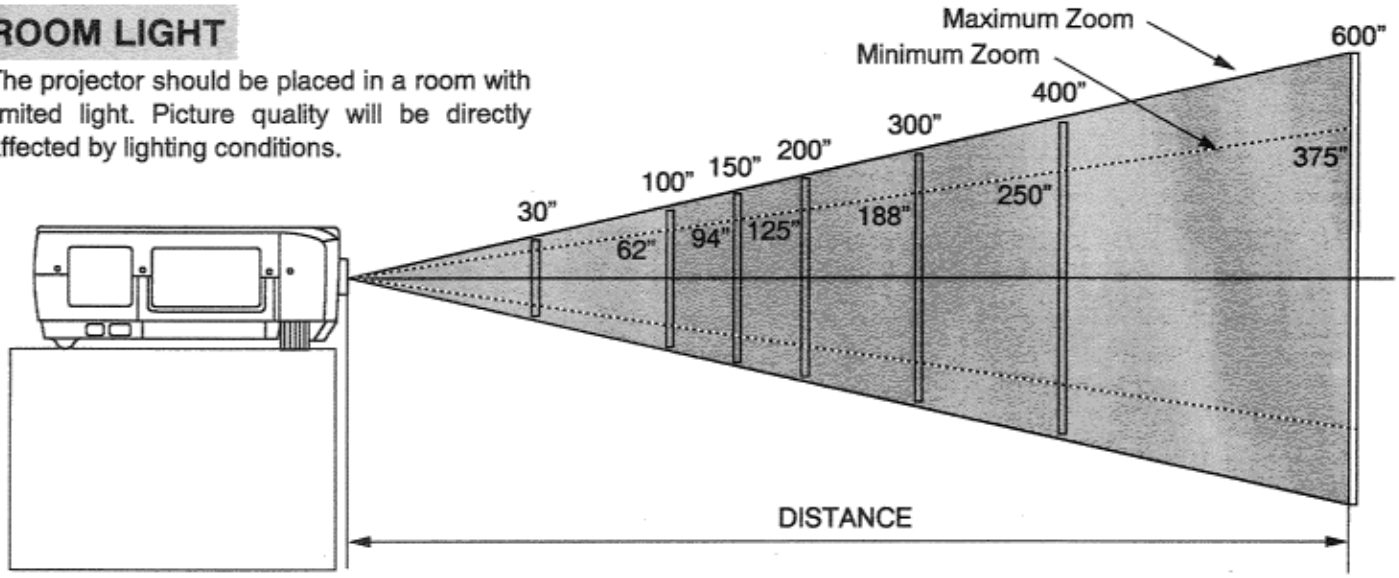

Screen Size	Max. Zoom	30"	100"	150"	200"	300"	400"	600"
	Min. Zoom	----------	62"	94"	125"	188"	250"	375"
Distance		3.6'(1.1 m)	11.8'(3.6 m)	17.7'(5.4 m)	24.3'(7.4 m)	36.4'(11.1 m)	48.6'(14.8 m)	73.2'(22.3 m)

LEVELING AND ELEVATING ADJUSTMENTS

Two feet adjust the projection angle and leveling the projector. The projection angle can be adjusted up to 4° degrees by rotating the two (left and right) feet located on the bottom of the projector. Level the projector by rotating the two feet.

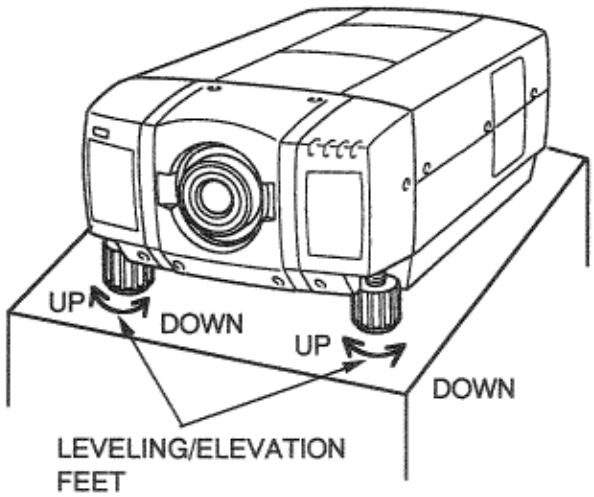

MOVE THE PROJECTED IMAGE POSITION

Adjust the projected image position (maximum 760 mm downward or upward on the 100" screen) by using lens shift function.
(See page 30)

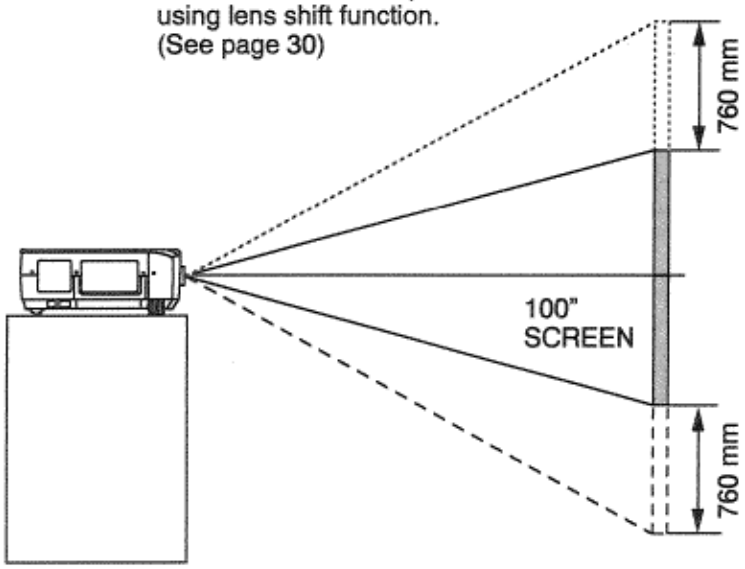

VENTILATION

Although this projector has a cooling fan to protect from overheating, please be careful to set the projector so that it can cool properly and you can avoid a risk of fire and malfunction.

•Do not cover the vents with papers or other materials.
•Keep the rear grill at least 3.3' (1 m) away from any object.
•Make sure that there are no objects under the projector. An object under the projector may prevent the projector from taking the cooling air through the bottom vent.

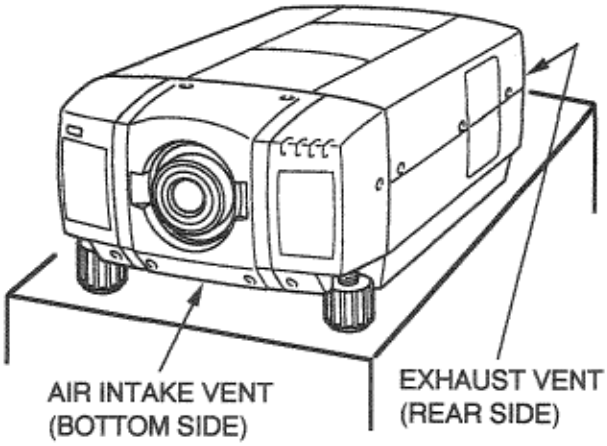

MOVING THE PROJECTOR

Use the carry handle when moving the projector.

Replace the lens cover and rotate the leveling/elevation feet fully clockwise when moving the projector to prevent damage to the projector.

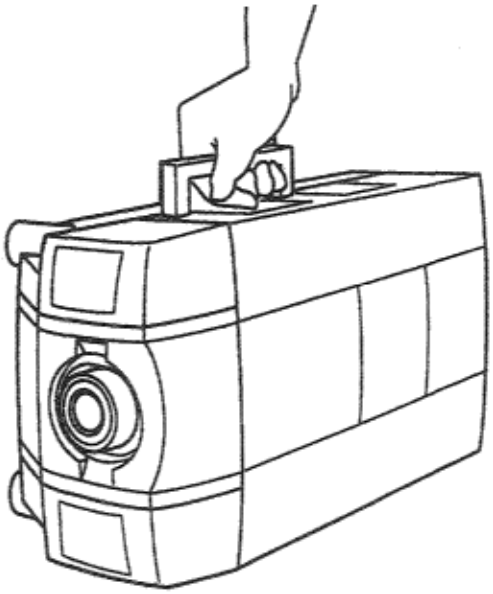

CAUTION IN CARRYING OR TRANSPORTING THE PROJECTOR

- Do not drop or give a shock to the projector, otherwise damage or malfunction may result.
- When carrying the projector, use a Eiki recommended Carrying Case.
- Do not transport the projector by using a courier or transport service in an unsuitable transport case. This may cause damage to the projector. To transport the projector through a courier or transport service, use a Eiki recommended Case.
- For a carrying or transportation cases, contact a Eiki authorized dealer.

CONNECTING THE PROJECTOR

CONNECTING THE COMPUTER

CONNECT NC TO THE COMPU ER. PUT 1 JACKS (BNC TYPE x 5)

Personal computers can be connected to the computer input (Red, Green, Blue, Horiz. Sync. and Vert. Sync.) on the projector.

- Connect the computer to these jacks using the BNC cables (not provided).

CONNECTING TO THE COMPUTER INPUT 2 TERMINAL {HDB1 5-PIN (VGA)}

Personal computers can be connected to the HDB1 5-pin (VGA) terminal on the projector.

- Connect the computer to these terminals using the VGA cable or VGA cable with VGA/MAC adapter (provided).

WARNING: For projectors, the VGA cable provided is designed to reduce RFI (Radio Frequency Interference) emissions. For regulatory compliance reasons, this cable must be used and must not be replaced by any other cable.

CONNECTING TO THE COMPUTER AUDIO INPUT JACKS (1 and 2)

- Connect audio outputs from your computer to these jacks using the RCA cable (not provided).
- If the audio input of the audio equipment is stereo, be sure to connect the right and left channels to the respective right and left jacks.
- If the audio input of the audio equipment is monaural, connect it to the left jack.

CONNECTING TO THE MULTI-POLE 12-PIN (CONTROL PORT) CONNECTORS (1 and 2)

- When the computer is operated by the remote control unit, connect three different type of cables (provided) between control port and computer mouse port or serial port.

COMPUTER TYPE	CABLE
IBM Compatible computer with PS/2 mouse port	Mouse Cable for PS/2 port.
IBM Compatible computer with serial control port.	Mouse Cable for Serial port.
Apple Macintosh computer with ADB mouse port	Mouse Cable for ADB port.

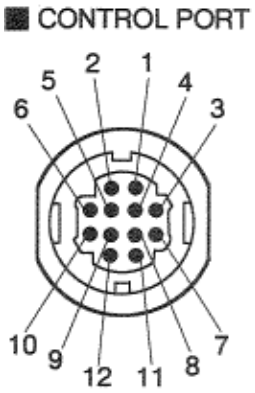

	PS/2 Port	Serial Port	ADB Port
1	———	TxD	———
2	CLK	———	ADB
3	DATA	———	———
4	———	———	———
5	———	———	———
6	———	———	———
7	———	READY	———
8	———	———	———
9	GND	GND	GND
10	———	———	———
11	———	———	———
12	———	———	———

CONTROL PORT CABLE REMOVAL HINT

Disconnect control port cable connector proceed as follows.

1. Hold the portion (A) of the connector.
2. Pull the portion (B) to disconnect.

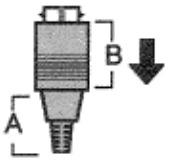

CONNECTING TO THE MONITOR OUTPUT TERMINAL {HDB15-PIN (VGA)}

This terminal contains the information that is viewed on the screen.

An external monitor can be connected to the HDB1 5-pin (VGA) terminal on the projector.

- Connect the monitor to this terminal using the VGA cable (not provided).

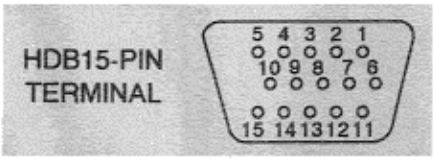

Pin No./Signal	Pin No./Signal
1 Red input	9 Non Connect
2 Green input	10 Ground (Vert. sync.)
3 Blue input	11 Sense 0
4 Sense 2	12 Sense 1
5 Ground (Horiz. sync.)	13 Horiz. sync.
6 Ground (Red)	14 Vert. sync.
7 Ground (Green)	15 Reserved
8 Ground (Blue)	

CONNECTING TO THE COMPUTER AUDIO MONITOR OUTPUT (VARIABLE) JACKS

These jacks will contain the audio information of the selected program source being viewed on the screen (Computer 1 or Computer 2). If you have selected program source Computer 2 the audio signal connected to the Computer 2 audio input jack will be available at the computer audio monitor output jacks. If you select program source “Video 1” or “Video 2, the audio signal connected to the Computer 1 audio input jack will be available at the computer audio monitor output jacks.
Connect audio input from audio equipment to these jacks using the RCA cables.

- If the audio input of the audio equipment is stereo, be sure to connect the right and left channels to the respective right and left jacks.
- If the audio input of the audio equipment is monaural, connect it to the left jack.

CONNECTING TO THE SERIAL PORT (DB9-PIN) TERMINAL

• if you control the projector by computer, you must connect a cable (not provided) from your computer to this terminal.

1	———
2	RxD
3	TxD
4	———
5	Ground
6	———
7	———
8	———
9	———

CONNECTING TO THE USB PORT CONNECTORS (1 and 2)

This Projector is designed for connecting with USB Port of the computer or peripheral equipment that is to be standard.

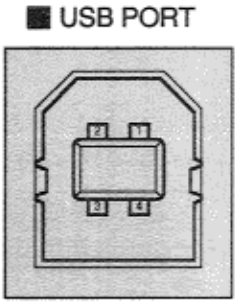

1	Vcc
2	- Data
3	+Data
4	Ground

Connecting an IBM-compatible desktop computer

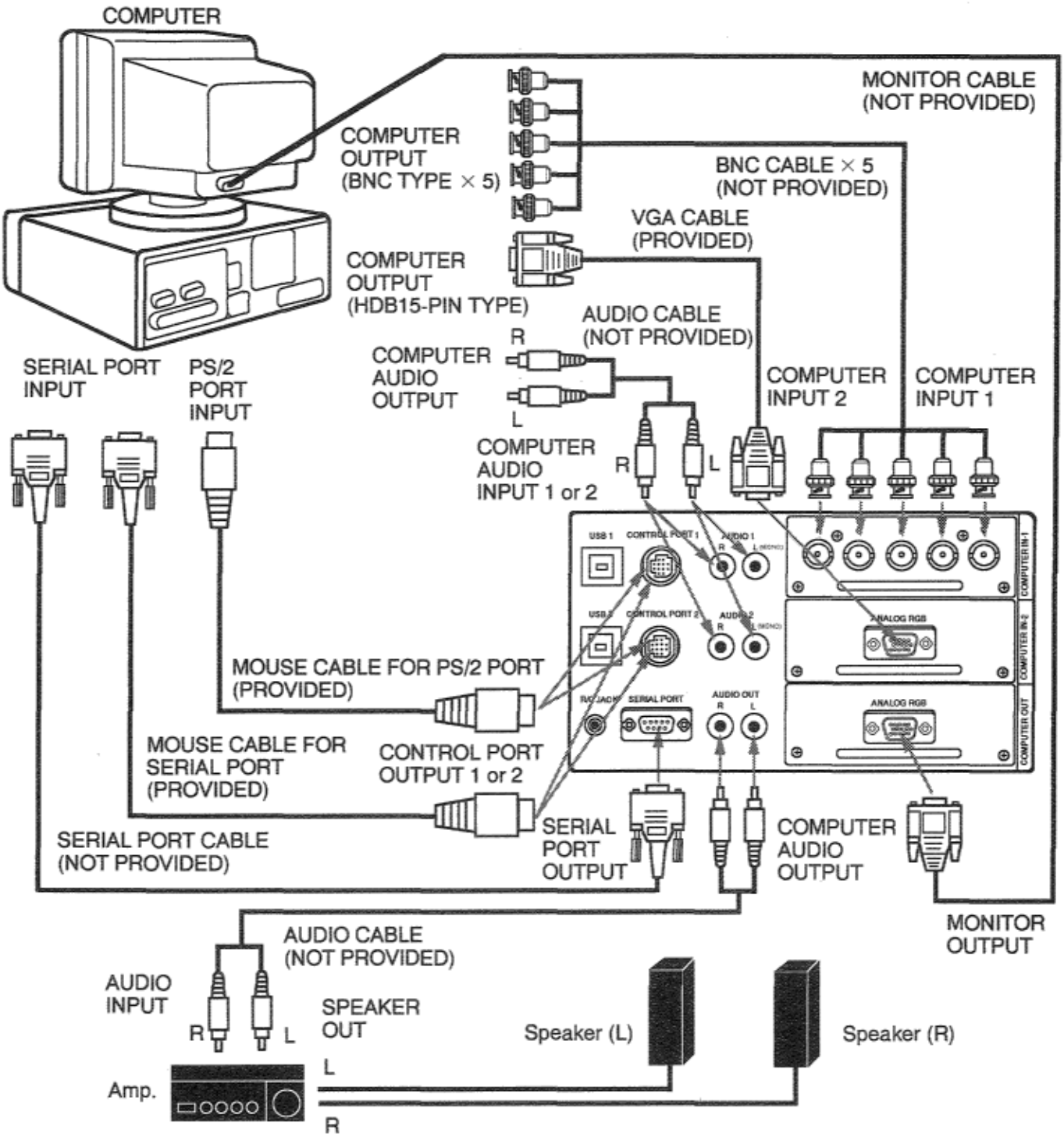

CAUTION

The hook up should be done as per the above illustration. After hook up~ turn on the projector, monitor, computer, in that order.

Connecting a Macintosh desktop computer

COMPUTER

COMPUTER OUTPUT (BNC TYPE × 5)

BNC CABLE × 5 (NOT PROVIDED)

MONITOR CABLE (NOT PROVIDED)

VGA/MAC ADAPTER (PROVIDED)

VGA CABLE (PROVIDED)

COMPUTER OUTPUT (DB15-PIN TYPE)

AUDIO CABLE (NOT PROVIDED)

COMPUTER AUDIO OUTPUT

R

L

COMPUTER INPUT 2

COMPUTER INPUT 1

ADB PORT INPUT

ADB PORT INPUT

COMPUTER AUDIO INPUT 1 or 2

MOUSE CABLE FOR ADB PORT (PROVIDED)

CONTROL PORT OUTPUT 1 or 2

SERIAL PORT CABLE (NOT PROVIDED)

SERIAL PORT OUTPUT

COMPUTER AUDIO OUTPUT

MONITOR OUTPUT

AUDIO CABLE (NOT PROVIDED)

AUDIO INPUT

SPEAKER OUT

Speaker (L)

Speaker (R)

Amp.

Set the dip switches as shown in the table below depending on the RESOLUTION MODE that you want to use before you turn on the projector and computer.

RESOLUTION MODE	SW1	SW2	SW3	SW4	SW5	SW6
13" MODE (640 × 480)	ON	ON	OFF	OFF	OFF	OFF
16" MODE (832 × 624)	OFF	ON	OFF	ON	OFF	OFF
19" MODE (1024 × 768)	OFF	ON	ON	OFF	OFF	OFF
21" MODE (1152 × 870)	ON	ON	ON	ON	OFF	OFF

VGA/MAC ADAPTER

SW1~ SW6

ON

OFF

CAUTION

The hook up should be done as per the above illustration. After hook up, turn on the projector, monitor, computer, in that order.

Connecting an IBM-compatible laptop computer

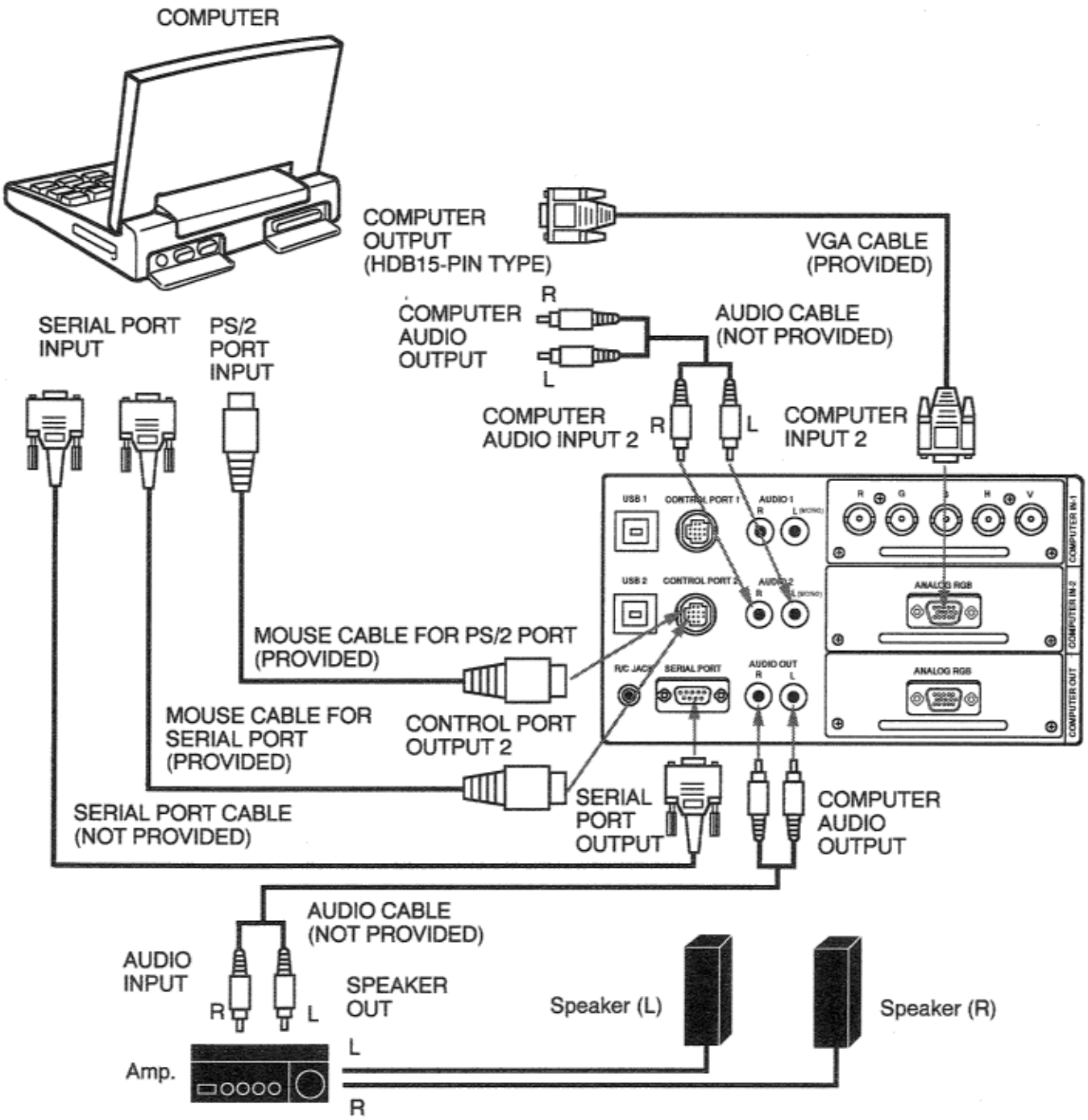

CAUTION

The hook up should be done as per the above illustration. After hook up, turn on the projector, computer, in that order.

Connecting a Macintosh PowerBook computer

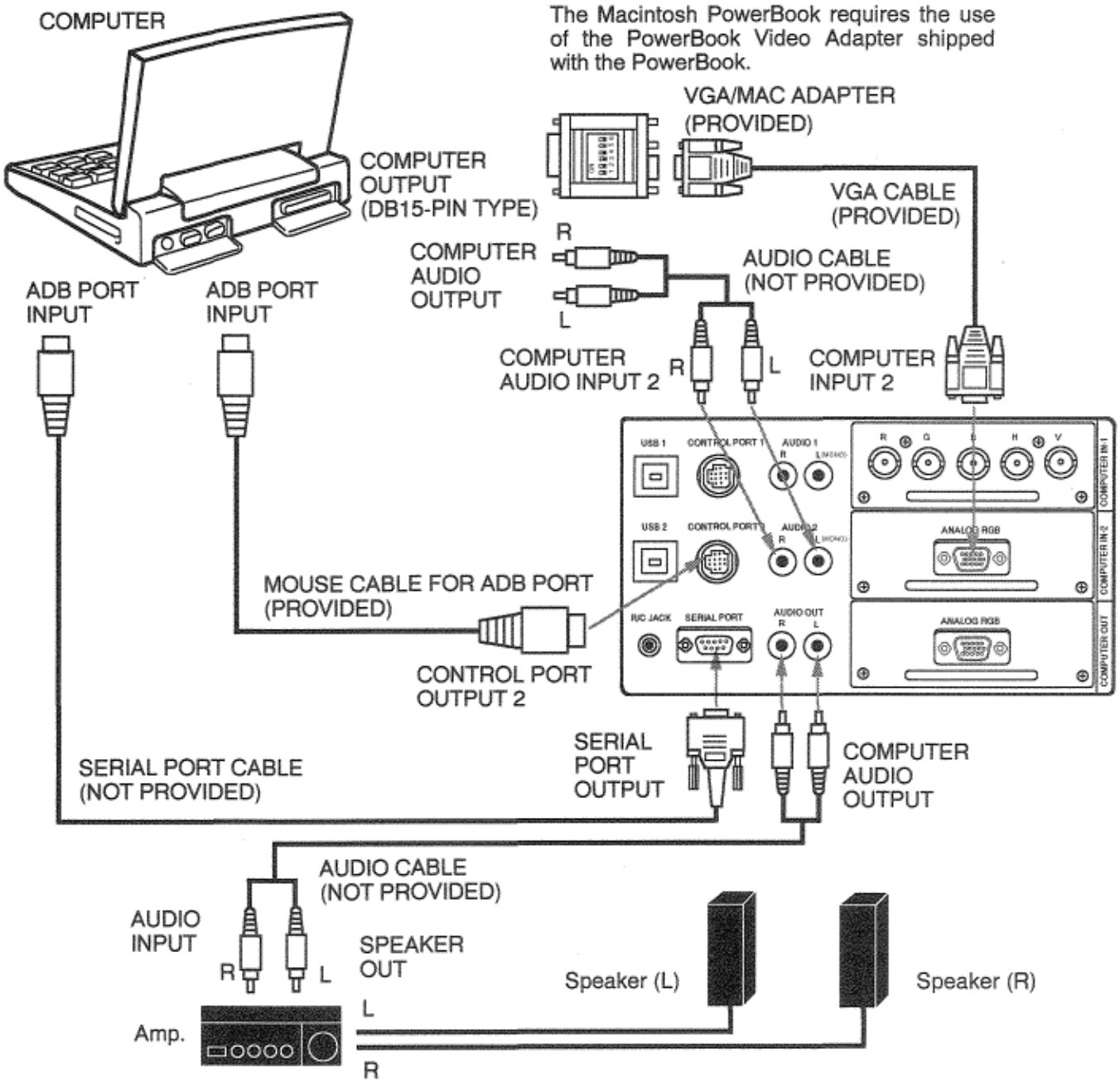

Set the dip switches as shown in the table below depending on the RESOLUTION MODE that you want to use before you turn on the projector and computer.

RESOLUTION MODE	SW1	SW2	SW3	SW4	SW5	SW6
13" MODE (640 × 480)	ON	ON	OFF	OFF	OFF	OFF
16" MODE (832 × 624)	OFF	ON	OFF	ON	OFF	OFF
19" MODE (1024 × 768)	OFF	ON	ON	OFF	OFF	OFF
21" MODE (1152 × 870)	ON	ON	ON	ON	OFF	OFF

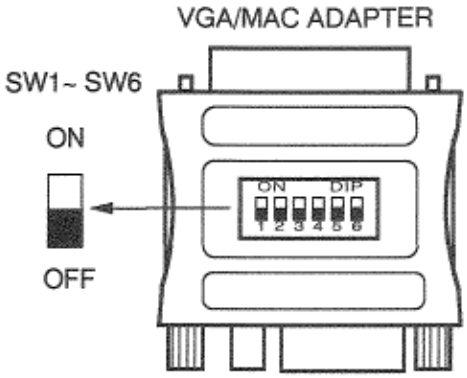

CAUTION

The hook up should be done as per the above illustration. After hook up, turn on the projector, computer, in that order.

CONNECTING THE VIDEO EQUIPMENT

CONNECTING TO THE VIDEO INPUT JACKS (1 and 2) BNC TYPE x 3
Connect to the video outputs of a VCR, video disc player, DVD player, video camera, satellite TV tuner or other AV equipment. Connect video output from AV equipment to these jacks using the BNC cables.

The video input can be selected 3 type of the input. “COMPOSITE VIDEO”, “Y/C SEPARATE VIDEO” and COMPONENT VIDEO {Y, Cb (B-Y), Cr (R-Y)}.
When the video equipment with COMPOSITE VIDEO type output jack is used, to select the “Video” position by video source select. When the video equipment with Y/C SEPARATE VIDEO type output jack is used, to select the “Y, C” position. When the video equipment with COMPONENT VIDEO {Y, Cb (8-Y), Cr (R-Y)} type output jack is used, to select the “Y, Cb, Cr” position. (See “VIDEO SOURCE SELECT” section on page 34).

CONNECTING S-VHS VIDEO INPUT JACKS (1 and 2)

The Video input includes an extra video input jack marked S-VIDEO to allow connection to an S-VHS format VCR that has separate Y/C video signals. The S-VIDEO jack has priority over the VIDEO jack.

CONNECTING TO THE AUDIO INPUT JACKS (1 and 2)
Connect to the audio outputs of a VCR, video disc player, DVD player, video camera, satellite TV tuner or other AV equipment. Connect audio output from AV equipment to these jacks using the RCA cables.
- If the audio signal from the AV equipment is stereo, be sure to connect the right and left channels to the respective right and left audio input jacks.
- If the external audio signal is monaural, connect it to the left jack.

CONNECTING TO THE VIDEO MONITOR OUTPUT JACKS (BNC TYPE x 3)

These jacks will contain the video information of the selected program source being viewed on the screen (Video 1 or Video 2). If you have selected program source Video 2 the video signal connected to the Video 2 video input jack will be available at the video monitor output jacks. If you select program source “Computer 1” or “Computer 2, the video signal connected to the Video 1 video input jack will be available at the video monitor output jacks.
Connect video input from AV equipment to these jacks using the BNC cables.

CONNECTIONG TO THE S-VHS VIDEO MONITOR OUTPUT JACK
The Video monitor output includes an extra video input jack marked S-VIDEO to allow connection to an S-VHS format

VCR that has separate Y/C video signals. The S-VIDEO jack has priority over the VIDEO jack.

CONNECTING TO THE AUDIO MONITOR OUTPUT (VARIABLE) JACKS

These jacks will contain the audio information of the selected program source being viewed on the screen (Video 1 or Video 2). If you have selected program source Video 2 the audio signal connected to the Video 2 audio input jack will be available at the audio monitor output jacks. If you select program source “Computer 1” or “Computer 2, the audio signal connected to the Video 1 audio input jack will be available at the audio monitor output jacks.
Connect audio input from AV equipment to these jacks using the RCA cables.

- If the audio input of the audio equipment is stereo, be sure to connect the right and left channels to the respective right and left jacks.
- If the audio input of the audio equipment is monaural, connect it to the left jack.

Connecting the Video Equipment

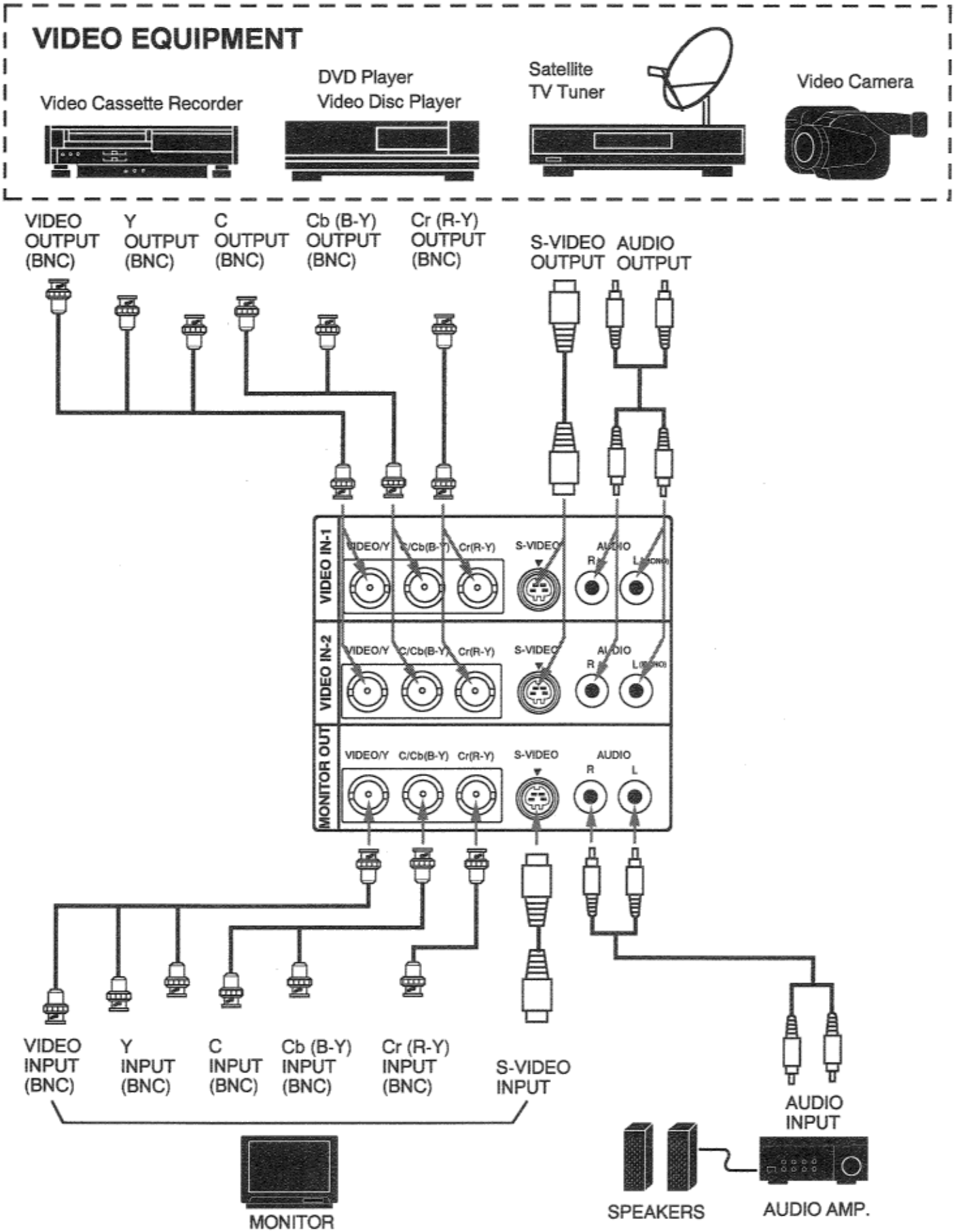

NOTE: The hook up should be done as per the above illustration. After hook up, turn on the projector, video equipment, in that order.

OPERATION OF CONTROLS

TOP OF THE PROJECTOR

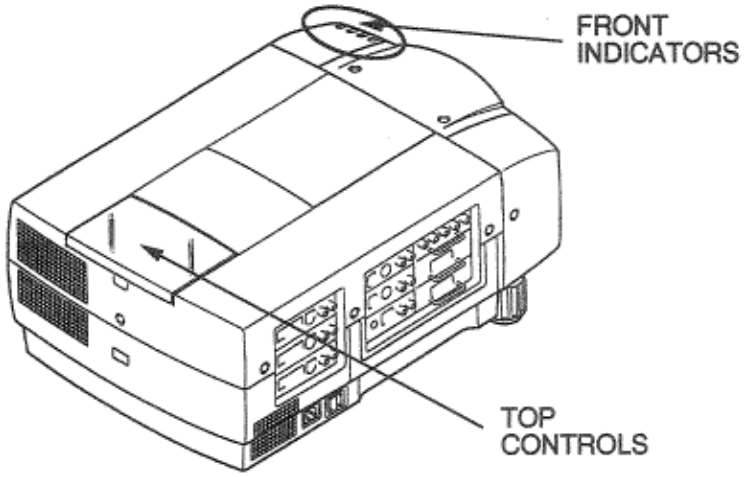

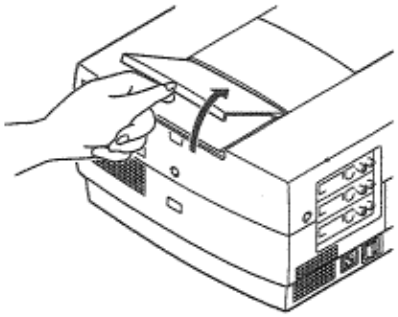

FRONT INDICATORS

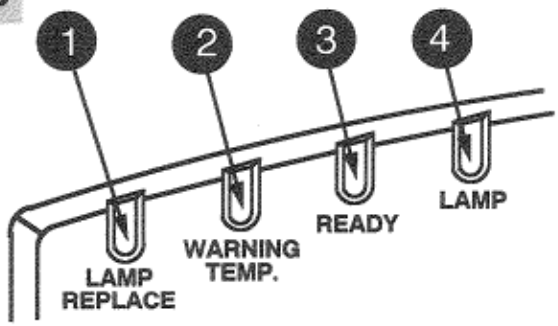

TOP CONTROLS

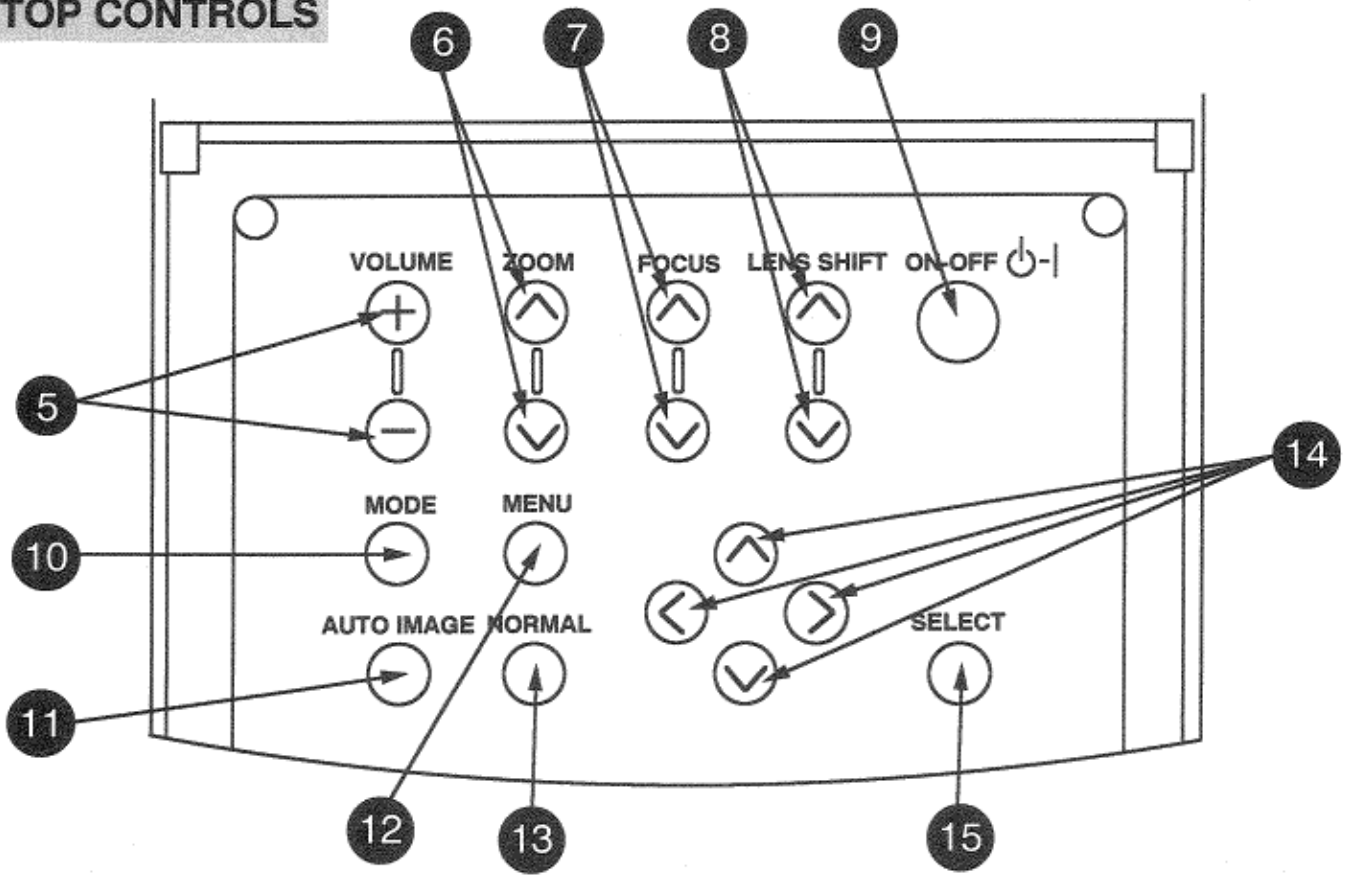

1 **LAMP REPLACEMENT INDICATOR**
Light is orange when projection lamp is nearing end of service life.

2 **TEMPERATURE WARNING INDICATOR**
Rashes red when internal projector temperature is too high.

3 **READY INDICATOR**
Light is green when projector lamp is ready to be turned on.

4 **LAMP POWER INDICATOR**
Light is dim when the projector is on.
Light is brightened when the projector is in stand-by mode.

5 **VOLUME BUTTONS**
Used to adjust volume.

6 **ZOOM BUTTONS**
Used to operate power zoom lens.

7 **FOCUS BUTTONS**
Used to operate power focus system.

8 **LENS SHIFT BUTTONS**
Used to operate power lens shift.

9 **LAMP POWER ON/OFF BUTTON**
Used to turn projection lamp on or off,

10 **MODE BUTTON**
Used to select source.
(Computer 1, Computer 2, Video 1 or Video 2 Input)

11 **AUTO IMAGE BUTTON**
Used to operate the AUTO IMAGE function.

12 **MENU BUTTON**
This button will activate the MENU operation.
Use this button, the POINT UP/DOWN/LEFT/RIGHT buttons and the SELECT button to make adjustments to the projector's setting in MENU operation.

13 **NORMAL BUTTON**
Used to reset to normal picture adjustment preset by factory.

14 **POINT UP/DOWN/LEFT/RIGHT BUTTONS**
To select an item on the MENU that you want to adjust. To select an item, move the arrow by pressing these buttons (UP, DOWN, LEFT or RIGHT).

15 **SELECT BUTTON**
This button has different functions depending on when used. This button is used to execute the item selected, to increase or decrease the values in certain items such as CONTRAST or BRIGHTNESS.

SIDE OF THE PROJECTOR (CONNECT THE COMPUTER)

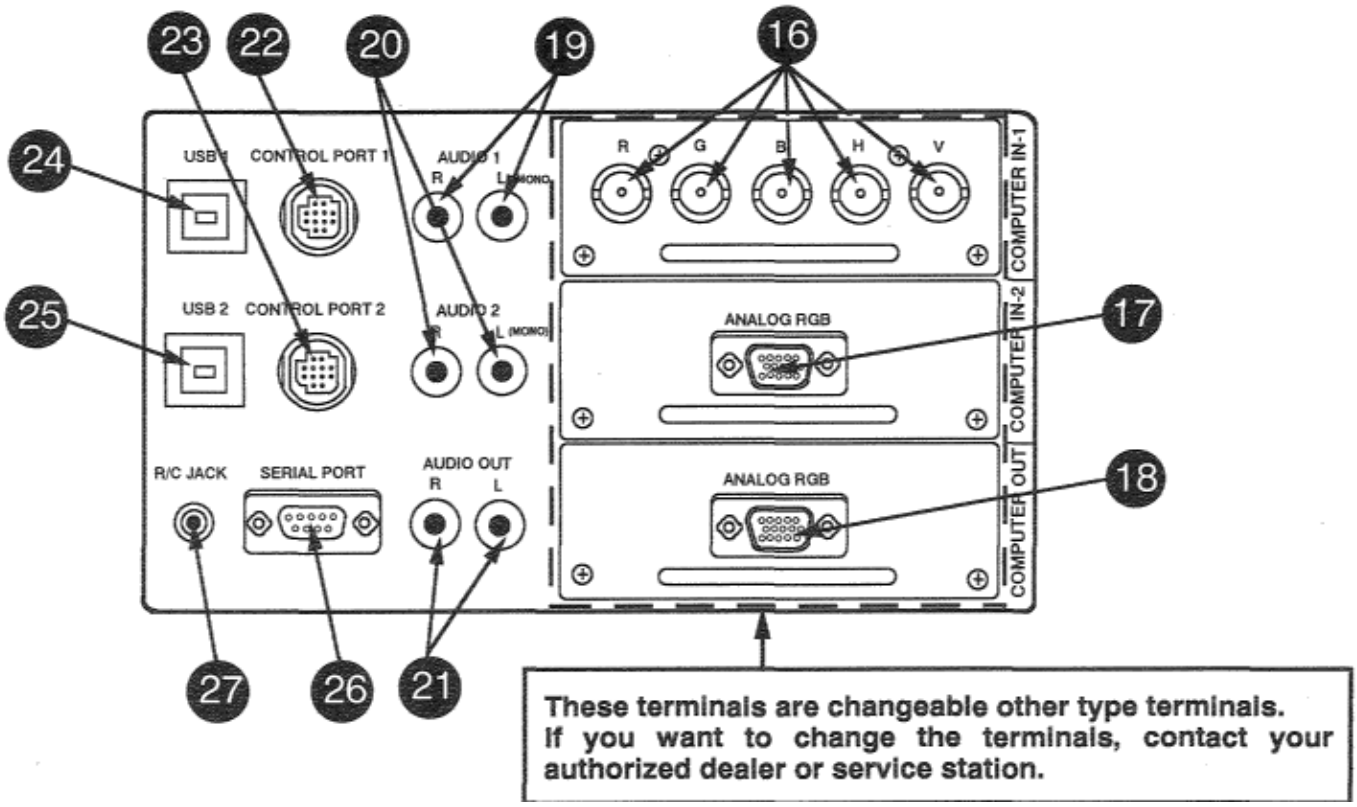

16 **COMPUTER INPUT-i JACKS (BNC TYPE x 5)**
Used to connect a computer to the projector.

17 **COMPUTER INPUT-2 TERMINAL (VGA HDB15)**
Used to connect a computer to the projector.

18 **MONITOR OUTPUT TERMINAL (VGA HDB15)**
Used to connect a monitor to the projector.

19 **COMPUTER AUDIO INPUT-i JACKS (R and L)**
Used to connect an audio output from the computer to the projector.

20 **COMPUTER AUDIO INPUT-2 JACKS (R and L)**
Used to connect an audio output from the computer to the projector.

21 **COMPUTER AUDIO MONITOR OUTPUT JACKS (R and L)**
Used to connect an audio input from audio equipment to the projector.

22 **CONTROL PORT-1 CONNECTOR**
Used to connect a mouse cable to the projector.

23 **CONTROL PORT-2 CONNECTOR**
Used to connect a mouse cable to the projector.

24 **USB PORT-1 CONNECTOR**
Used to connect a computer to the projector.

25 **USB PORT-2 CONNECTOR**
Used to connect a computer to the projector.

26 **SERIAL PORT TERMINAL (DB9)**
Used to connect a computer to the projector.

27 **WIRED REMOTE JACK**
When using the wired remote control, connect the remote cable to this jack.

SIDE OF THE PROJECTOR (CONNECT THE VIDEO EQUIPMENT)

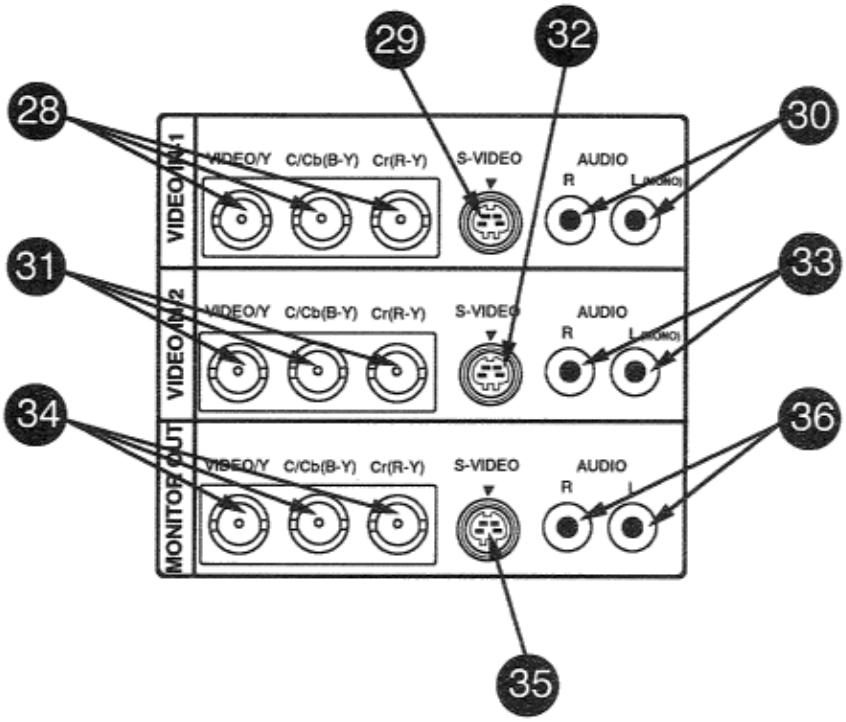

28 **VIDEO INPUT JACKS-1 (BNC TYPE x 3)**
Used to connect a video source to the projector.

29 **S-VIDEO INPUT JACK-1**
Used to connect a S-VHS video source to the projector.

30 **AUDIO INPUT JACKS-1 (R and L)**
Used to connect an audio source to the projector.

31 **VIDEO INPUT JACKS-2 (BNC TYPE x 3)**
Used to connect a video source to the projector.

32 **S-VIDEO INPUT JACK-2**
Used to connect a S-VHS video source to the projector.
.

33 **AUDIO INPUT JACKS-2 (R and L)**
Used to connect an audio source to the projector

34 **VIDEO MONITOR OUTPUT JACKS (BNC TYPE x 3)**
Permits video connection to a monitor.

35 **VIDEO MONITOR (S-VIDEO) OUTPUT JACK**
Permits S-VHS video connection to a monitor.

36 **AUDIO MONITOR OUTPUT JACKS (R and L)** Permits audio connection to a monitor.

OPERATION OF REMOTE CONTROL (Wireless)

This remote control unit can be used not only as a remote control for the projector operation but also as a wireless mouse for PC. The remote control unit has a pointing pad and two click buttons. The wireless mouse function is activated when you do not adjust the setting by using the MENU operation.

NOTE: To use the wireless mouse function, connect the attached cable between the projector and your PC since the mouse control signal is transferred through the projector. Use the proper cable and follow the instruction as described in section "CONNECTING THE PROJECTOR" on pages 9 — 14 depending on your PC.

FRONT

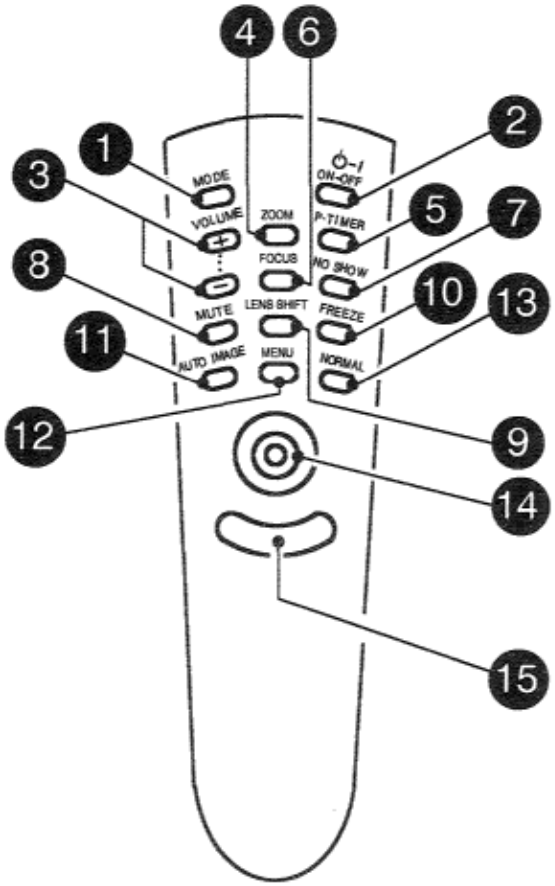

SIDE

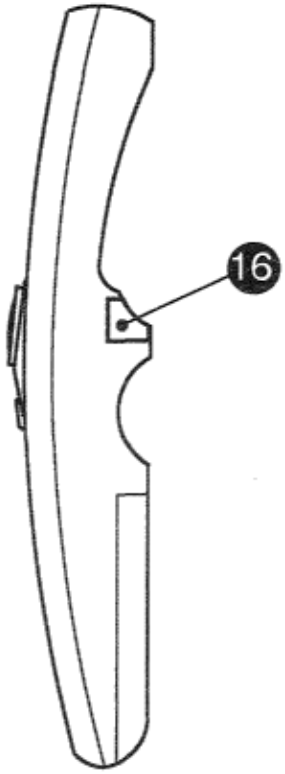

1 **MODE BUTTON**
Used to select source. (Computer 1, Computer 2, Video 1 or Video 2 Input)

2 **LAMP POWER ON/OFF BUTTON**
Used to turn the projection lamp on or off.

3 **VOLUME BUTTONS**
Used to adjust volume.

4 **ZOOM BUTTON**
Used to select power zoom lens adjust

5 **P-TIMER BUTTON**
Used to operate the P-TIMER function.

6 **FOCUS BUTTON**
Used to select focus adjust.

7 **NO SHOW BUTTON**
Used to change the screen into black image.

8 **SOUND MUTE BUTTON**
Used to mute sound.

9 **LENS SHIFT BUTTON**
Used to select power lens shift.

10 **FREEZE BUTTON**
Use this button to freeze on-screen image.

11 **AUTO IMAGE BUTTON**
Used to operate the AUTO IMAGE function.

12 **MENU BUTTON**
This button will activate the MENU operation. Use this button, the POINT UP/DOWN/LEFT/RIGHT button and the SELECT (REAR CLICK) button to make adjustments to the projector's setting in MENU operation.

13 **NORMAL BUTTON**
Use to reset to normal picture adjustment preset by factory.

14 **POINTING PAD**
(POINT UP/DOWN/LEFT/RIGHT BUTTON)
When in use as a remote for the projector.
To select an item on the MENU that you want to adjust. To select an item, move the arrow by pressing the pad upward, downward, leftward or rightward.
Used to operate power zoom lens, power focus system or power lens shift by pressing the pad either upward or downward.

When in use as a wireless mouse
Used to move the pointer. The pointer is moved according to the direction you are pressing

15 **FRONT CLICK BUTTON**
This button has the same function as the right button in a PC mouse. Pressing this button does not affect any operation when in MENU mode.

16 **SELECT (REAR CLICK) BUTTON**
When in use as a remote for the projector.
This button has different functions depending on when used. This button is used to execute the item selected, to increase or decrease the values in certain items such as CONTRAST or BRIGHTNESS.

When in use as a wireless mouse
This button has the same function as the left button in a PC mouse.

REMOTE CONTROL BATTERY INSTALLATION

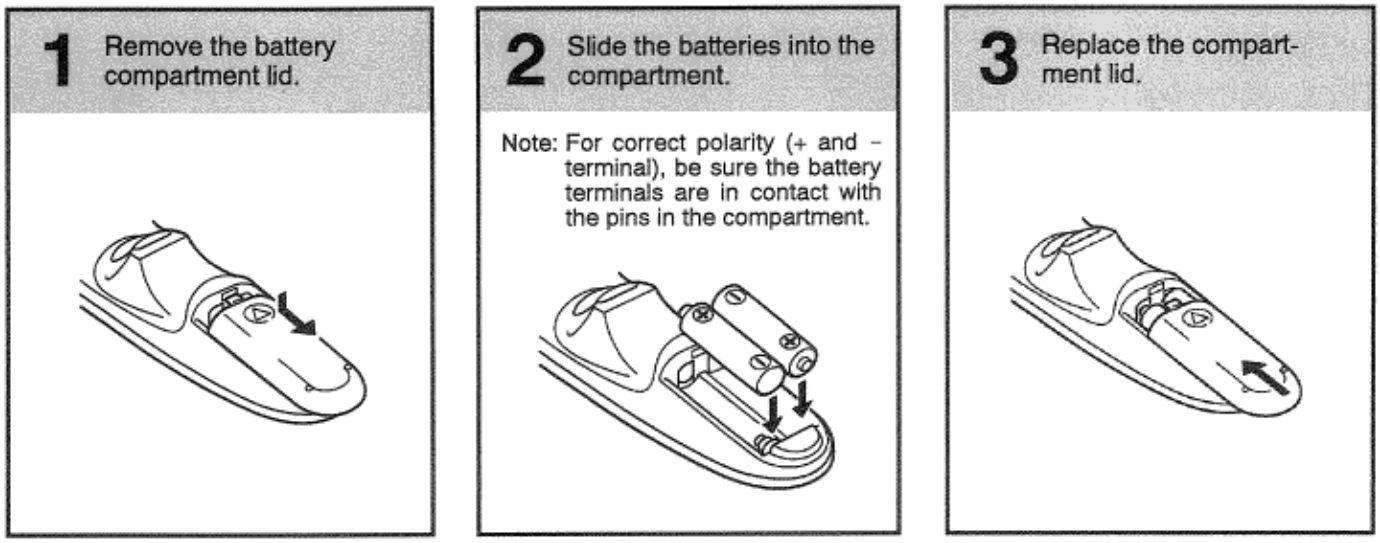

USING THE REMOTE CONTROL UNIT

Point the remote control toward the projector (Receiver widow) whenever pressing the buttons. Maximum operating range for the remote control is about 16.4' (5 m) and 60^0 front and rear of the projector.

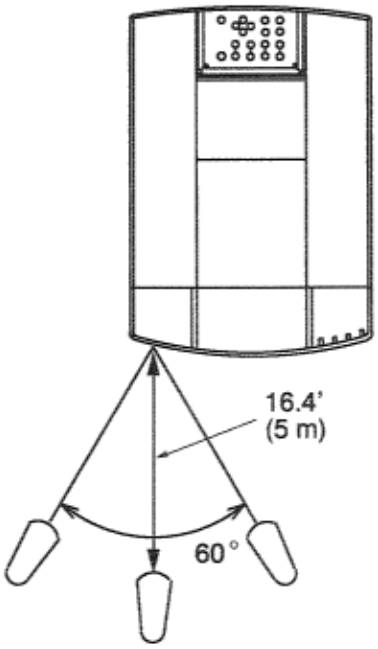

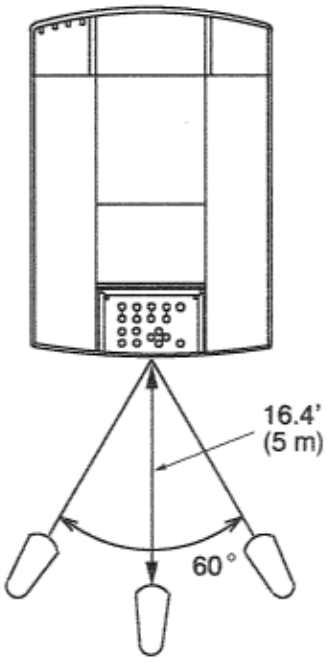

To insure safe operation, please observe the following precautions:

- Use (2) AA type alkaline batteries.
- Change two batteries at the same time.
- Do not use a new battery with a used battery.
- Avoid contact with water.
- Do not drop the remote control unit.
- If batteries have leaked on the remote control, carefully wipe the case clean and load new batteries.

OPERATION OF REMOTE CONTROL (Wireless/Wired)

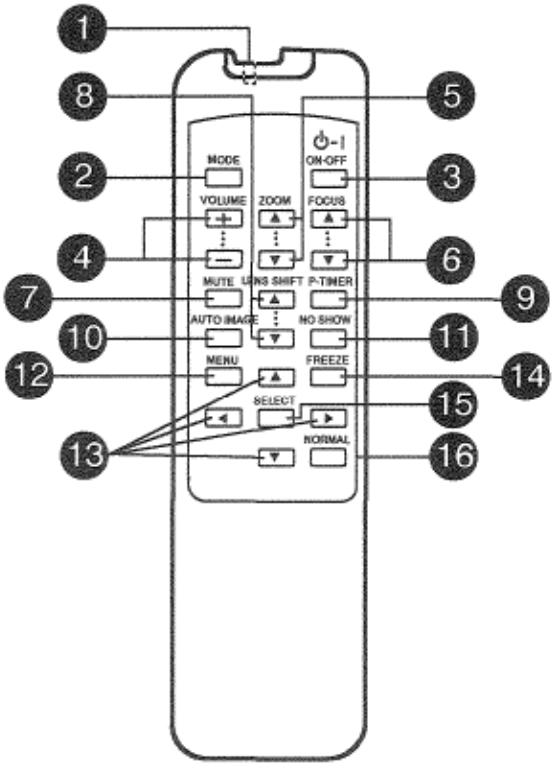

1 **WIRED REMOTE JACK**
When using the wired remote control, connect the remote cable to this jack.

2 **MODE BUTTON**
Used to select source.
(Computer 1, Computer 2, Video 1 or Video 2 Input)

3 **LAMP POWER ON/OFF BUTTON**
Used to turn projection lamp on or off

4 **VOLUME BUTTONS**
Used to adjust volume.

5 **ZOOM BUTTONS**
Used to operate power zoom lens.

6 **FOCUS BUTTONS**
Used to operate power focus system.

7 **SOUND MUTE BUTTON**
Used to mute sound.

8 **LENS SHIFT BUTTONS**
Used to operate power lens shift.

9 **P-TIMER BUTTON**
Used to operate the P-TIMER function.

10 **AUTO IMAGE BUTTON**
Used to operate the AUTO IMAGE function.

11 **NO SHOW BUTTON**
Used to change the screen into black image.

12 **MENU BUTTON**
This button will activate the MENU operation.
Use this button, the POINT UP/DOWN/LEFT/RIGHT buttons and the SELECT button to make adjustments to the
projector's setting in MENU operation.

13 **POINT UP/DOWN/LEFT/RIGHT BUTTONS**
To select an item on the MENU that you want to adjust. To select an item, move the arrow by pressing these buttons (UP, DOWN, LEFT or RIGHT).

14 **FREEZE BUTTON**
Use this button to freeze on-screen image

15 **SELECT BUTTON**
This button has different functions depending on when used. This button is used to execute the item selected, to increase or decrease the values in certain items such as CONTRAST or BRIGHTNESS.

16 **NORMAL BUTTON**
Used to reset to normal picture adjustment preset by factory.

REMOTE CONTROL BATTERY INSTALLATION

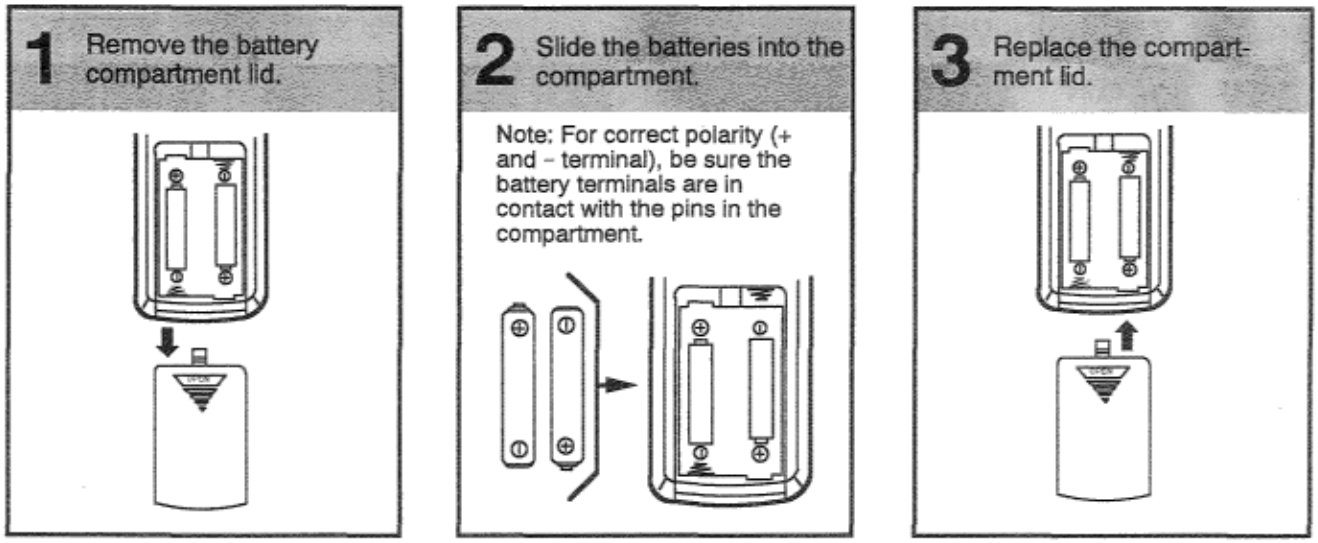

The remote control unit can be used as wireless or wired remote control.

USING THE REMOTE CONTROL UNIT (wireless)

Point the remote control toward the projector (Receiver window) whenever pressing the buttons. Maximum operating range for the remote control is about 16.4' (5 m) and 60^0 front and rear of the projector.

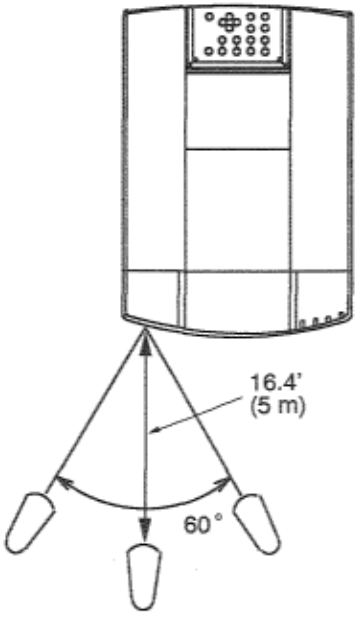

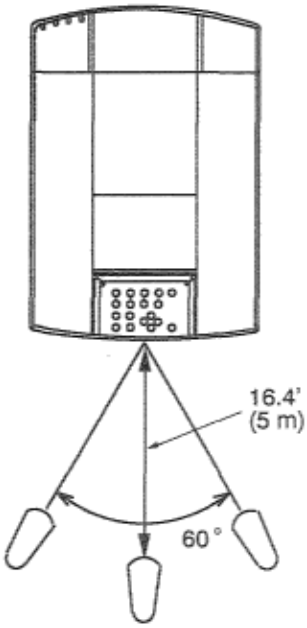

USING THE REMOTE CONTROL UNIT (wired)

Connect a remote control cable to R/C jacks located on the wireless/wired remote control unit and the side of the projector.

To insure safe operation, please observe the following precautions:

- •Use (2) AA type alkaline batteries.
- •Change two batteries at the same time.
- •Do not use a new battery with a used battery.
- •Avoid contact with water.
- •Do not drop the remote control unit.
- •If batteries have leaked on the remote control, carefully wipe the case clean and load new batteries.

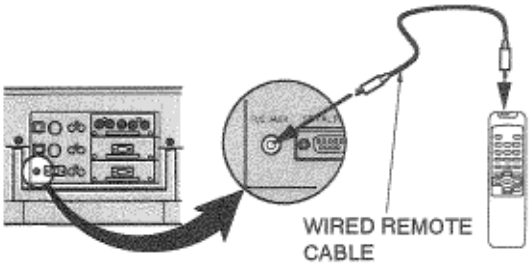

CONTROL THE PROJECTOR

The projector has two types of operation: DIRECT OPERATION and MENU OPERATION. DIRECT OPERATION allows you to operate the projector by using one button without showing the MENU. In MENU OPERATION mode, you display menus where you can adjust the projector's settings. Follow the instruction for each control.

DIRECT OPERATION

ADJUST ITEM	TOP CONTROL OF THE PROJECTOR	WIRELESS/WIRED REMOTE CONTROL	WIRELESSREMOTE CONTROL
LAMP POWER ON/0FF	LAMP POWER 0 OFF	LAMP POWER 0N/OFF	MODE
MODE SELECT	MODE	MODE	VOLUME (+) and (-)
SOUND VOLUME	VOLUME (+) and **(-)**	VOLUME (+) and (-)	MUTE
SOUUDMUTE	NOT AVAILABLE	MUTE	ZOOM POINT (UP/DOWN)
ZOOM	ZOOM (▲) and (▼)	ZOOM (▲) and (▼)	FOCUS
FOCUS	FOCUS (▲) and (▼)	FOCUS (▲) and (▼)	FOCUS POINT (UP/DOWN)
LENS SHIFT	LENS SHIFT (▲) and (▼)	LENS SHIFT (▲) and (▼7)	LENS SHIFT POINT (UP/DOWN)
NORMAL PICTURE	NORMAL	NORMAL	NORMAL
NO SHOW	NOT AVAILABLE	NO SHOW	NO SHOW
P-TIMER	NOT AVAILABLE	P-TIMER	P-TIMER
FREEZE PICTURE	NOT AVAILABLE	FREEZE	FREEZE
AUTO IMAGE	AUTO IMAGE	AUTO IMAGE	AUTO IMAGE

MENU OPERATION

ADJUST ITEM	TOP CONTROL OF THE PROJECTOR	WIRELESS/WIRED REMOTE CONTROL	WIRELESS REMOTE CONTROL
MODE SELECT	MENU POINT LEFT/RIGHT SELECT POINT UP/DOWN SELECT	MENU POINT LEFT/RIGHT SELECT POINT UP/DOWN SELECT	MENU POINT (LEFT/RIGHT) SELECT (REAR CLICK) POINT (UP/DOWN) SELECT (REAR CLICK)

1. COMPUTER/VIDEO MODE

ADJUST ITEM	TOP CONTROL OF THE PROJECTOR	WIRELESS/WIRED REMOTE CONTROL	WIRELESS REMOTE CONTROL
SOUND **SOUND VOLUME** **TREBLE** **BASS** **BUILT-IN SP.** **SOUND MUTE** **LANGUAGE**	MENU POINT LEFT/RIGHT SELECT POINT UP/DOWN SELECT	MENU POINT LEFT/RIGHT SELECT POINT UP/DOWN SELECT	MENU POINT (LEFT/RIGHT) SELECT (REAR CLICK) POIINT (UP/DOWN) SELECT (REAR CLICK)
SETTING **BLUE BACK** **DISPLAY** **REVERSE T/B** **REVERSE R/L** **SPLIT IMAGE** **LAMP AGE**	MENU POINT LEFT/RIGHT SELECT POINT UP/DOWN SELECT	MENU POINT LEFT/RIGHT SELECT POINT UP/DOWN SELECT	MENU POINT (LEFT/RIGHT) SELECT (REAR CLICK) POINT (UP/DOWN) SELECT (REAR CLICK)
MENU EXIT	MENU POINT LEFT/RIGHT SELECT	MENU POINT LEFT/RIGHT SELECT	MENU POINT (LEFT/RIGHT SELECT (REAR CLICK)

2. VIDEO MODE

ADJUST ITEM	TOP CONTROL OF THE PROJECTOR	WIRELESS/WIRED REMOTE CONTROL	WIRELESS REMOTE CONTROL
COLOR SYSTEM **VIDEO SOURCE** **VIDEO** **Y, C** **Y, Cb, Cr**	MENU POINT LEFT/RIGHT SELECT POINT UP/DOWN SELECT	MENU POINT LEFT/RIGHT SELECT POINT UP/DOWN SELECT	MENU POINT (LEFT/RIGHT) SELECT (REAR CLICK) POIINT (UP/DOWN) SELECT (REAR CLICK)
PICTURE IMAGE **COLOR** **TINT** **WHITE BALANCE** **CONTRAST** **BRIGHTNESS** **SHARPNESS** **PICTURE SCREEN** **WIDE** **REGULAR**	MENU POINT LEFT/RIGHT SELECT POINT UP/DOWN SELECT	MENU POINT LEFT/RIGHT SELECT POINT UP/DOWN SELECT	MENU POINT (LEFT/RIGHT) SELECT (REAR CLICK) POIINT (UP/DOWN) SELECT (REAR CLICK)

3. COMPUTER MODE

ADJUST ITEM	TOP CONTROL OF THE PROJECTOR	WIRELESS/WIRED REMOTE CONTROL	WIRELESS REMOTE CONTROL
COMPUTER SYSTEM	MENU POINT LEFT/RIGHT SELECT POINT UP/DOWN SELECT	MENU POINT LEFT/RIGHT SELECT POINT UP/DOWN SELECT	MENU POINT (LEFT/RIGHT) SELECT (REAR CLICK) POINT (UP/DOWN) SELECT (REAR CLICK)
AUTO IMAGE **FINE SYNC** **TOTAL DOTS** **POSITION**	MENU POINT LEFT/RIGHT SELECT POINT UP/DOWN SELECT	MENU POINT LEFT/RIGHT SELECT POINT UP/DOWN SELECT	MENU POINT (LEFT/RIGHT) SELECT (REAR CLICK) POINT (UP/DOWN) SELECT (REAR CLICK)
PICTURE IMAGE **FINE SYNC** **TOTAL DOTS** **WHITE BALANCE** **CONTRAST** **BRIGHTNESS**	MENU POINT LEFT/RIGHT SELECT POINT UP/DOWN SELECT	MENU POINT LEFT/RIGHT SELECT POINT UP/DOWN SELECT	MENU POINT (LEFT/RIGHT) SELECT (REAR CLICK) POINT (UP/DOWN) SELECT (REAR CLICK)
PICTURE POSITION	MENU POINT LEFT/RIGHT SELECT POINT LEFT/RIGHT/UP/DOWN SELECT	MENU POINT LEFT/RIGHT SELECT POINT LEFT/RIGHT/UP/DOWN SELECT	MENU POINT (LEFT/RIGHT) SELECT (REAR CLICK) POINT (LEFT/RIGHT/UP/DOWN) SELECT (REAR CLICK)
PC ADJUSTMENT	MENU POINT LEFT/RIGHT SELECT POINT UP/DOWN SELECT	MENU POINT LEFT/RIGHT SELECT POINT UP/DOWN SELECT	MENU POINT (LEFT/RIGHT) SELECT (REAR CLICK) POINT (UP/DOWN) SELECT (REAR CLICK)
PICTURE SCREEN **TRUE** **EXPAND** **COMPRESSED** **PANNING**	MENU POINT LEFT/RIGHT SELECT POINT UP/DOWN SELECT POINT LEFT/RIGHT/UP/DOWN	MENU POINT LEFT/RIGHT SELECT POINT UP/DOWN SELECT POINT LEFT/RIGHT/UP/DOWN	MENU POINT (LEFT/RIGHT) SELECT (REAR CLICK) POINT (UP/DOWN) SELECT (REAR CLICK) POINT (LEFT/RIGHT/UP/DOWN)

NOTES:

1. The MENU, once activated, will not disappear unless you choose MENU EXIT operation. If you switch to DIRECT operation by pressing a DIRECT operation button while in MENU mode, the menus will disappear and the MENU operation will end.

2. You can use the REMOTE CONTROL UNIT or the TOP CONTROL OF THE PROJECTOR to operate the MENU operation.

USING THE PROJECTOR

TO TURN ON THE PROJECTOR

Connect the projector to a video source (Computer, VCR, Video Camera, Video Disc Player, etc.) using the appropriate terminals on the side of the projector (See "CONNECTING THE PROJECTOR" section on pages 9-16). Connect the projector's AC power cord into a wall outlet and turn the MAIN ON/OFF switch (located on the side of the projector) to the ON position. The LAMP POWER indicator will light RED, the READY indicator will light GREEN.

Press the LAMP POWER ON/OFF button on the remote control unit or on the projector to ON. The LAMP POWER indicator light will dim and the cooling fans will operate, The count-down display appears on the screen and the count-down starts (30-29-28-...1). The signal from the video source appears after 30 seconds.

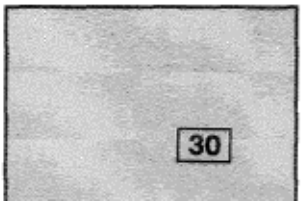

CAUTION:
THIS PROJECTOR USES A METAL-HALIDE ARC LAMP. TO EXTEND THE LIFE OF THE LAMP, ONCE YOU HAVE TURNED IT ON, WAIT AT LEAST 5 MINUTES BEFORE TURNING IT OFF.

NOTE: TEMPERATURE WARNING INDICATOR flashes red, the projector will automatically turn off.
Wait at least 5 minutes before turning the projector on.
If the TEMPERATURE WARNING INDICATOR continues to flash, follow the procedures below:
(1). Press LAMP POWER ON/OFF button to OFF.
(2). Check the air filter for dust accumulation.
(3). Remove dust with vacuum cleaner (See "AIR FILTER CARE AND CLEANING" section on page 50.)
(4). Press LAMP POWER ON/OFF button to ON.

If the TEMPERATURE WARNING INDICATOR still continues to flash, call your authorized dealer or service station.

TO TURN OFF THE PROJECTOR

Press the LAMP POWER ON/OFF button on the remote control unit or on the projector. The "Power off ?" appears on the screen. Press again the LAMP POWER ON/OFF button to turn OFF the projector. The LAMP POWER indicator will light bright and READY indicator will turn off. The cooling fans will operate for 1 minute after the projector is turned off. (During this "cooling down" period, the projector cannot be turned on.) The READY indicator will light green again and the projector may be turned on by pressing the LAMP POWER ON/OFF button. To power down completely, turn the MAIN ON/OFF switch (located on the side of the projector) to the OFF position.

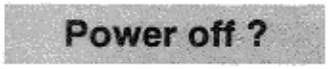

DIRECT OPERATION

MODE SELECT

Press the MODE button (located on remote control unit or on the projector) to select Computer 1, Computer 2, Video 1 or Video 2 Input. The "Computer 1", "Computer 2", 'Video 1" or "Video 2" display will appear on the screen for a few seconds.

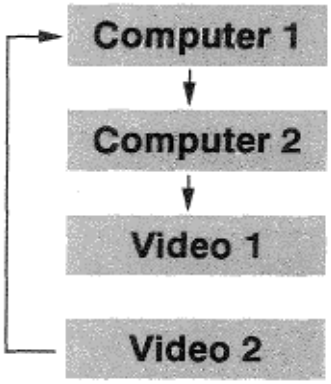

SOUND VOLUME ADJUSTMENT

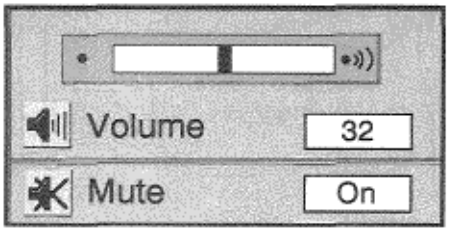

Press the VOLUME buttons (located on remote control unit or on the projector) to adjust the volume. The volume display will be displayed on the screen for a few seconds.
Pressing volume (÷) will increase volume and increase the number on the screen. Pressing volume (-) will decrease volume and decrease the number on the screen.

SOUND MUTE FUNCTION

Pressing the MUTE button on the remote control unit will mute audio. Press the MUTE button again to restore audio to its previous level. The mute display will be displayed on the screen for a few seconds.

ZOOM ADJUSTMENT (Top control and Wireless/Wired remote control unit)

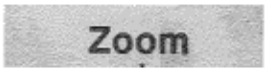

Press the ZOOM (+) or **(-)** button to obtain your desired picture size. For a larger picture, press (+) and for a smaller picture, press (~—).

ZOOM ADJUSTMENT (Wireless remote control unit)

Press the ZOOM button and press POINT UP/DOWN button(s) to obtain your desired picture size. The Zoom display will be displayed on the screen for a few seconds. For a larger picture, press (UP) and for a smaller picture, press (DOWN).

FOCUS ADJUSTMENT (Top control and Wireless/Wired remote control unit)

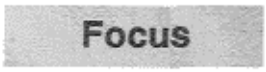

Press the FOCUS (+) or **(-)** button for a sharper, crisper picture.

FOCUS ADJUSTMENT (Wireless remote control unit)

Press the FOCUS button and press POINT UP/DOWN button(s) to obtain a sharper, crisper picture. The Focus display will be displayed on the screen for a few seconds.

LENS SHIFT FUNCTION (Top control and Wireless/Wired remote control unit)

Press the LENS SHIFT (+) or **(-)** button to obtain your desired screen position.

LENS SHIFT FUNCTION (Wireless remote control unit)

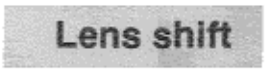

Press the LENS SHIFT button and press POINT UP/DOWN button(s) to obtain your desired screen position. The Lens shift display will be displayed on the screen for a few seconds.

NORMAL PICTURE FUNCTION

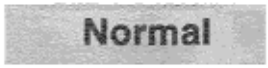

The normal picture level is factory preset on the projector and can be restored anytime by pressing the NORMAL button (located on remote control unit or on the projector). The "Normal" display will be displayed on the screen for a few seconds.

NO SHOW FUNCTION

Press the NO SHOW button on the remote control unit. The screen will change into black image and the "NO SHOW' is displayed on the screen for a few seconds.

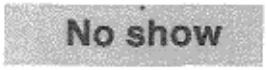

This function is cancelled when the NO SHOW button is pressed again or any other function button is pressed.

P-TIMER FUNCTION

Press the P-TIMER button on the remote control unit. The timer display "00:00" appears on the screen and the timer starts to count the time (00:00-59:59). Press again the P-TIMER button to stop the timer. Then press the P-TIMEA button to cancel the P-TIMER function.

FREEZE PICTURE FUNCTION

Press the FREEZE button on the remote control unit, and the picture will remain on-screen. This function is cancelled when the FREEZE button is pressed again or any other function button is pressed.

NOTE: Your computer or video equipment is not affected by this function, and will continue to run.

AUTO IMAGE FUNCTION

Press the AUTO IMAGE button on the remote control unit or on the projector. The item(s) indicated "ON" in the AUTO IMAGE FUNCTION are adjusted automatically.
If all the items in AUTO IMAGE FUNCTION are "OFF", AUTO IMAGE SETTING display appears. If you wish to operate the AUTO IMAGE FUNCTION, perform the steps 3 - 9 of "AUTO IMAGE FUNCTION" section on page 39.

MENU OPERATION

In MENU OPERATION mode, you can adjust the projector. You can use the TOP CONTROL OF THE PROJECTC or the REMOTE CONTROL UNIT.

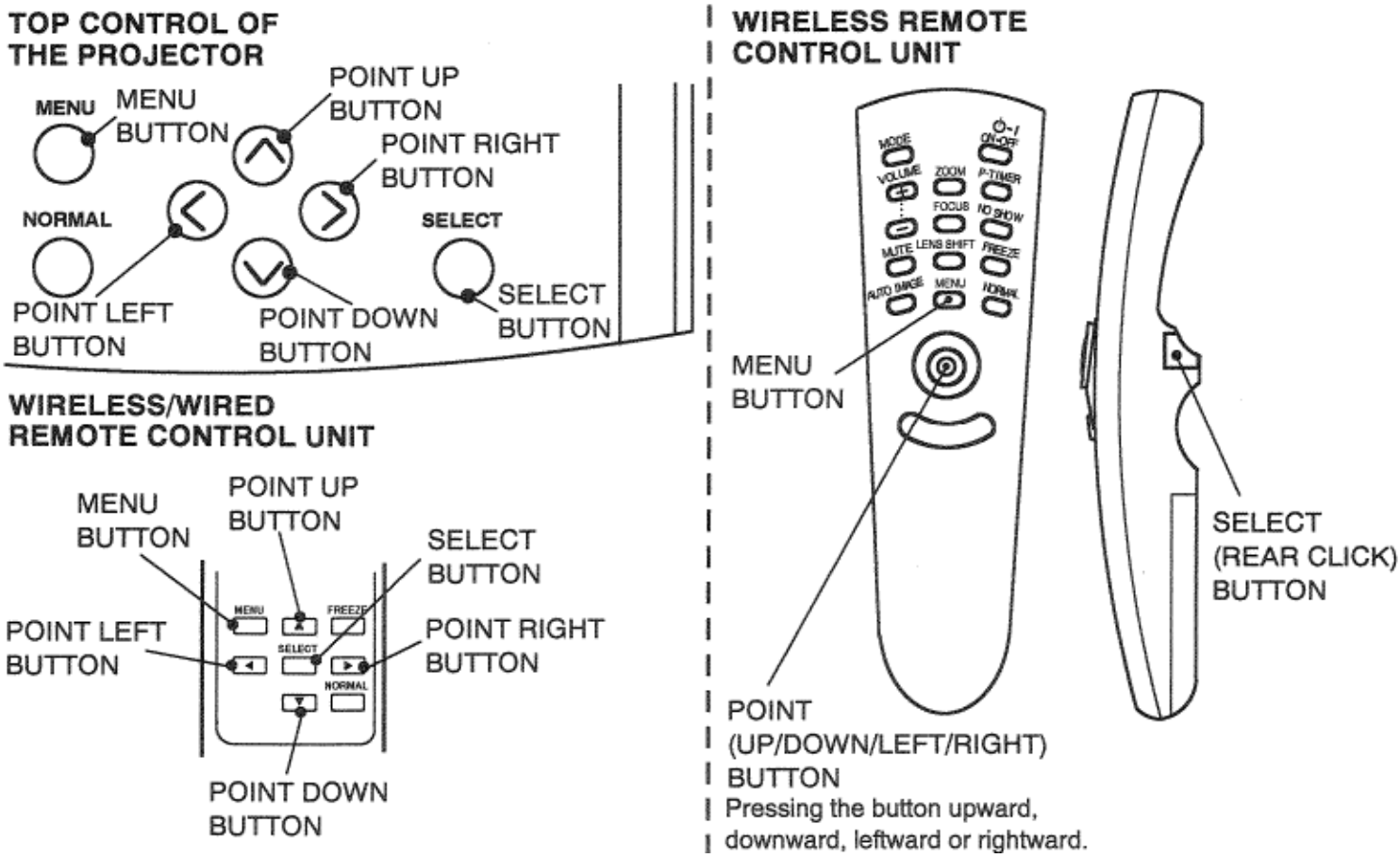

MODE SELECT

You can select a mode used in the MENU among computer 1, computer 2, video 1 and video 2.

1. Press the MENU BUTTON and the MAIN MENU DISPLAY dialog box will appear.
2. Press the POINT LEFT/RIGHT BUTTON(s) to select Computer or Video and press the SELECT (REAR CLICK) BUTTON. Another dialog box MODE DISPLAY will appear.
3. Press the POINT DOWN BUTTON and a red arrow will appear.
4. Move the arrow to the mode you want (computer 1, computer 2, video 1 or video 2) to use by pressing the POINT UP/DOWN BUTTON(s) and then press the SELECT (REAR CLICK) BUTTON.

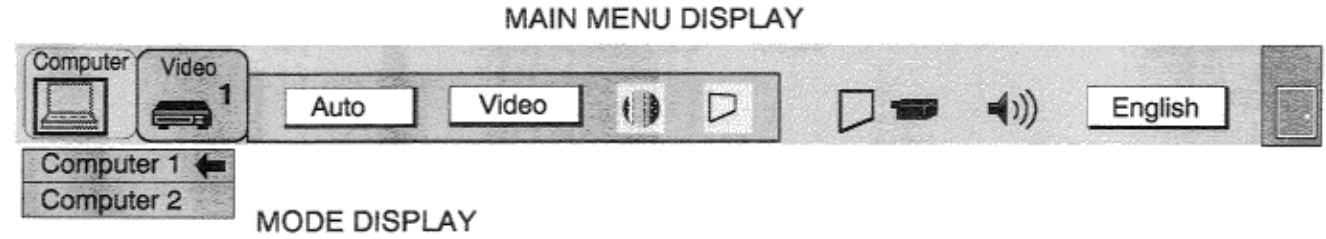

SOUND ADJUSTMENT

You can adjust the sound volume, treble, bass levels and Built-in SP., Sound Mute ON/OFF switch in the MENU display.

1. Press the MENU BUTTON and the MAIN MENU DISPLAY dialog box will appear.
2. Press the POINT LEFT/RIGHT BUTTON(s) to select SOUND and press the SELECT (REAR CLICK) BUTTON. Another dialog box SOUND ADJUST DISPLAY will appear.
3. Press the POINT DOWN BUTTON and a red arrow will appear.
4. Move the arrow to an item that you want to adjust by pressing the POINT UP/DOWN BUTTON(s).
5. To increase the sound volume, treble and bass point the arrow to A and then press the SELECT (REAR CLICK) BUTTON. To decrease the sound volume, treble and bass point the arrow to 7 and then press the SELECT (REAR CLICK) BUTTON.
6. To disconnect the built-in speaker, point the arrow to Built-in SP. and then press the SELECT (REAR CLICK) BUTTON. The display is changed Off from On and Internal speaker is disconnected.
7. To mute the sound, point the arrow to Mute and then press the SELECT (REAR CLICK) BUTTON. The display is changed On from Off and mute the sound.
8. To quit the MENU, point to Quit and then press the SELECT (REAR CLICK) BUTTON.

MAIN MENU DISPLAY

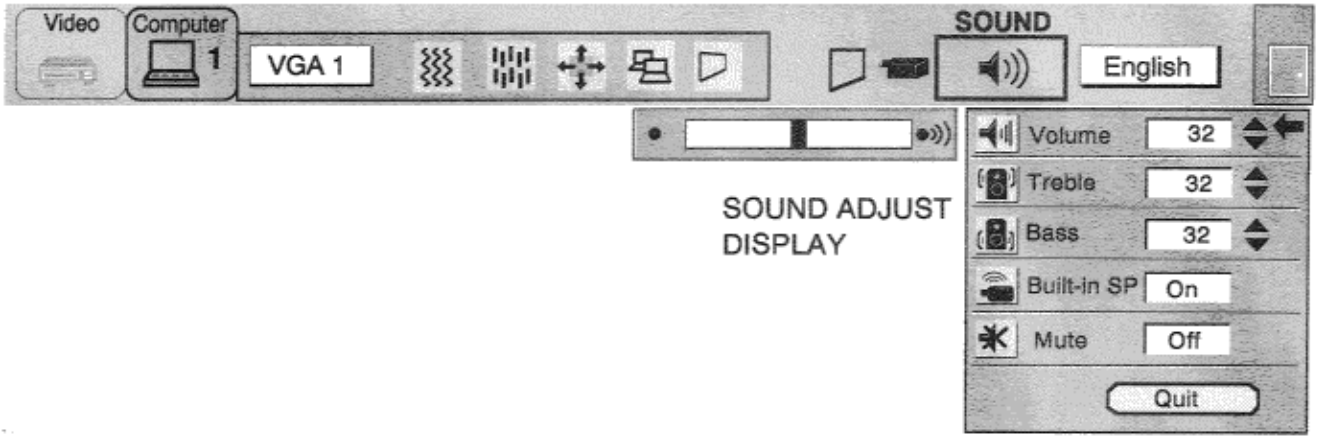

SOUND ADJUST DISPLAY

LANGUAGE ADJUSTMENT

You can select a language used in the MENU among English, German, French, Italian, Spanish and Japanese.

1. Press the MENU BUTTON and the MAIN MENU DISPLAY dialog box will appear.
2. Press the POINT LEFT/RIGHT BUTTON(s) to select LANGUAGE and press the SELECT (REAR CLICK) BUTTON. Another dialog box LANGUAGE SETTING DISPLAY will appear.
3. Press the POINT DOWN BUTTON and a red arrow will appear.
4. Move the arrow to the language you want to use by pressing the POINT UP/DOWN BUTTON(s) and then press the SELECT (REAR CLICK) BUTTON.
5. The setting is permanently held even if the MAIN ON/OFF is switched off.

MAIN MENU DISPLAY

LANGUAGE SETTING DISPLAY

MENU EXIT

To close the MENU display, press the POINT RIGHT BUTTON to select right end ICON and then press the SELECT (REAR CLICK) BUTTON.

NOTE: Press the MENU BUTTON during the appearing of the MENU display on the screen, the MENU display is disappeared.

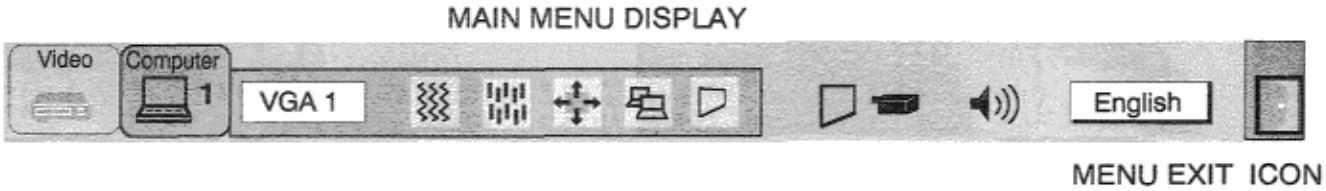

COLOR SYSTEM SELECT (VIDEO MODE)

This projector is compatible with the six major broadcast video standards: PAL, SECAM, NTSC, NTSC 4.43, PAL-M or PAL-N (COLOR SYSTEMs). When the color system is set to "Auto" position, this projector can receive color programs from one of the 4 systems (PAL, SECAM, NTSC or NTSC 4.43), automatically. However, if the video signal is poor, the projector may not reproduce the proper video image. In this case, a specific broadcast format should be choosen by color system select.

1. Connect the video equipment and the PROJECTOR, and turn them on.
2. Set MODE SELECT to "VIDEO MODE".
3. Press the MENU BUTTON and the MAIN MENU DISPLAY dialog box will appear.
4. Press the POINT LEFT/RIGHT BUTTON(s) to select SYSTEM and press the SELECT (REAR CLICK) BUTTON. Another dialog box COLOR SYSTEM DISPLAY will appear. The current COLOR SYSTEM is displayed in the system window.
5. Press the POINT DOWN BUTTON and a red arrow will appear.
6. If you want to change the COLOR SYSTEM from the current one, move the arrow by press the POINT UP/DOWN BUTTON(s) to the system that you want to select and then press the SELECT (REAR CLICK) BUTTON and changed the color mode.
7. The setting changed is temporarily effective until you turn off the MAIN ON/OFF switch.

VIDEO SOURCE SELECT (VIDEO MODE)

1. Connect the video equipment to the PROJECTOR, and turn them on.
2. Set MODE SELECT to ‘VIDEO MODE”.
3. Press the MENU BUTTON and the MAIN MENU DISPLAY dialog box will appear.
4. Press the POINT LEFT/RIGHT BUTTON(s) to select VIDEO SOURCE and press the SELECT (REAR CLICK) BUTTON. Another dialog box VIDEO SOURCE DISPLAY will appear. The current VIDEO SOURCE is displayed in the window.
5. Press the POINT DOWN BUTTON and a red arrow will appear.
6. To change the current VIDEO SOURCE, press the POINT UP/DOWN BUTTON(s) to move the arrow to a desirable video source and then press the SELECT (REAR CLICK) BUTTON.
7. The setting changed remains effective until the MAIN ON/OFF switch is turned off.

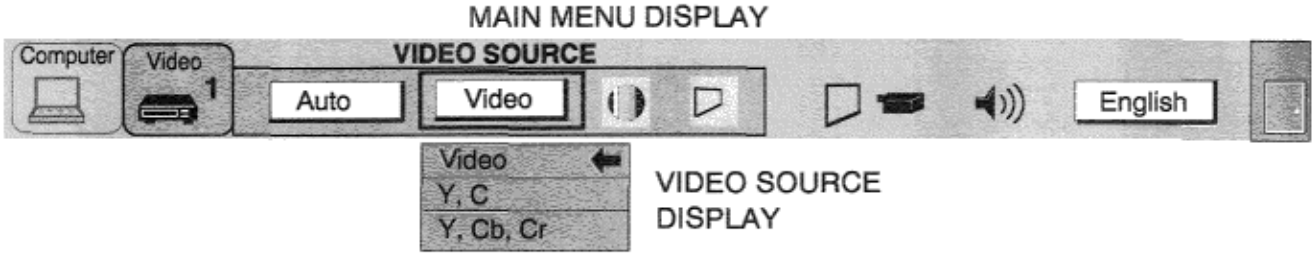

PICTURE IMAGE ADJUSTMENT (VIDEO MODE)

Picture adjustments have been preset at the factory. If you want to change the setting, operate the projector as follows.

1. Press the MENU BUTTON and the MAIN MENU DISPLAY dialog box will appear.
2. Press the POINT LEFT/RIGHT BUTTON(s) to select IMAGE and press the SELECT (REAR CLICK) BUTTON. Another dialog box IMAGE ADJUST DISPLAY will appear. This shows the current picture settings.
3. In this dialog box, you can adjust the settings by increasing or decreasing the levels shown as numbers. The items and the range of the levels that you can adjust are summarized in the table below.
4. Press the POINT DOWN BUTTON and a red arrow will appear.
5. Move the arrow to an item that you want to adjust by pressing the POINT UP/DOWN BUTTON(s).
6. To increase the level, point the arrow to A and then press the SELECT (REAR CLICK) BUTTON. To decrease the level, point the arrow to 7 and then press the SELECT (REAR CLICK) BUTTON.
7. You may want to store the settings in the memory so that you can recall them later. To store the settings, move the arrow to Stored and then press the SELECT (REAR CLICK) BUTTON. When you have stored the settings, "OK ?" is displayed for confirmation.
8. Move the arrow to Yes and then press the SELECT (REAR CLICK) BUTTON. The stored settings are permanently held even if the MAIN ON/OFF is switched off.
9. To quit the MENU, move the arrow to Quit and then press the SELECT (REAR CLICK) BUTTON.
10. If you do not want to store the settings, move the arrow to Quit and then press the SELECT (REAR CLICK) BUTTON. The settings changed remains effective until the MAIN ON/OFF switch is turned off.
11. To recall the settings from the memory that you have stored, move the arrow to Reset and then press the SELECT (REAR CLICK) BUTTON. When you have reset the settings, "OK ?" is displayed for confirmation. Move the arrow to Yes and then press the SELECT (REAR CLICK) BUTTON. You can adjust the settings again if needed.

NOTE: 'TINT" will be skipped in the PAL, SECAM, PAL-M and PAL-N mode.

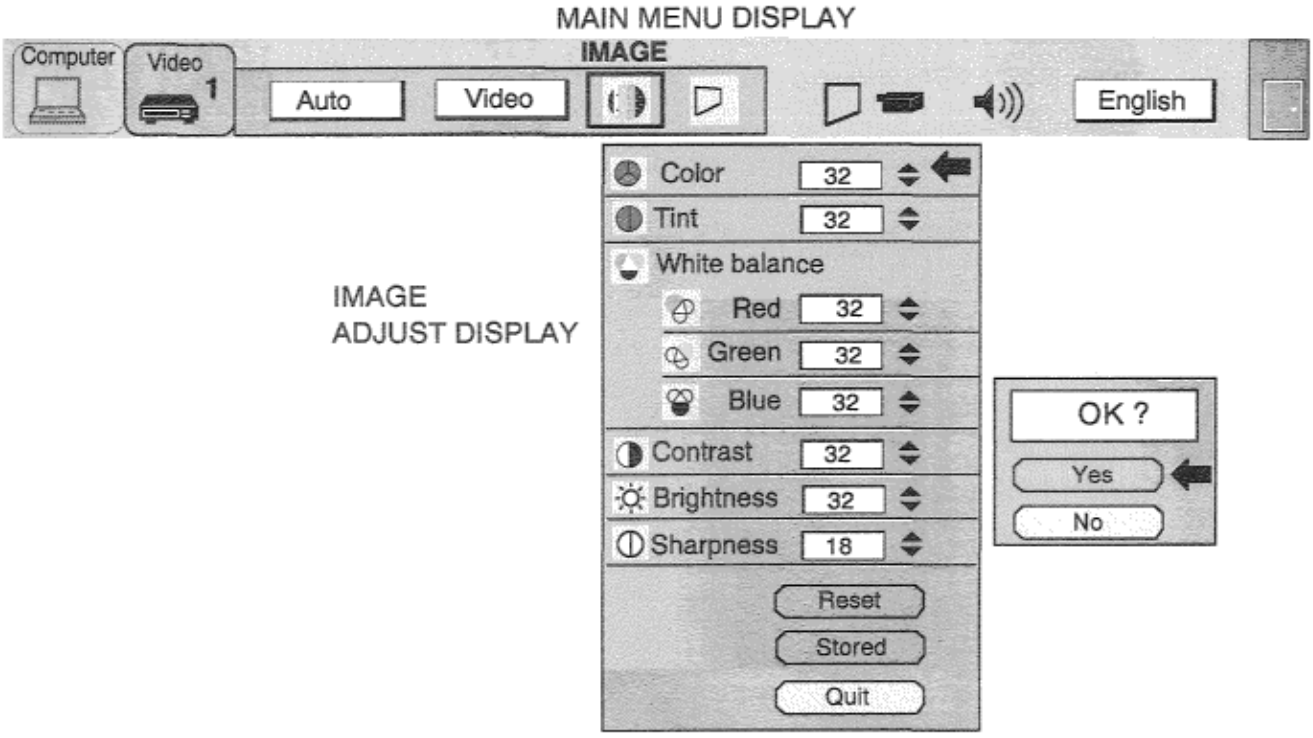

TABLE OF PICTURE IMAGE ADJUSTMENT

COLOR	DECREASES	0 ←→	63	INCREASES
TINT	MORE PURPLE	0 ←→	63	MORE GREEN
WHITE BALANCE (R/G/B)	DECREASES	0 ←→	63	INCREASES
CONTRAST	LIGHTER	0 ←→	63	DEEPER
BRIGHTNESS	DARKER	0 ←→	63	BRIGHTER
SHARPNESS	SOFTER	0 ←→	31	SHARPER

PICTURE SCREEN ADJUSTMENT (VIDEO MODE)

This projector has the Wide image function, which enables you to view a wider video image.

WIDE image function
This projector is designed to project a normal video image (with 4 x 3 aspect ratio). In addition, with the WIDE function, the projector can project a wider video image by compressing 4 x 3 image. This feature may be used by those who want to enjoy watching a movie with a cinemascope image. You can switch to either WIDE or REGULAR screen mode.

1. Press the MENU BUTTON and the MAIN MENU DISPLAY dialog box will appear.
2. Press the POINT LEFT/RIGHT BUTTON(s) to select SCREEN and press the SELECT (REAR CLICK) BUTTON. Another dialog box SCREEN ADJUST DISPLAY will appear.
3. Press the POINT DOWN BUTTON and a red arrow will appear.
4. To switch to “Wide” mode, move the arrow to Wide by pressing the POINT UP/DOWN BUTTON(s) and then press the SELECT (REAR CLICK) BUTTON.
5. To switch to “Regular” mode, move the arrow to Regular by pressing the POINT UP/DOWN BUTTON(s) and then press the SELECT (REAR CLICK) BUTTON.
6. The “Wide” settings is temporarily effective until you turn off the MAIN ON/OFF switch.

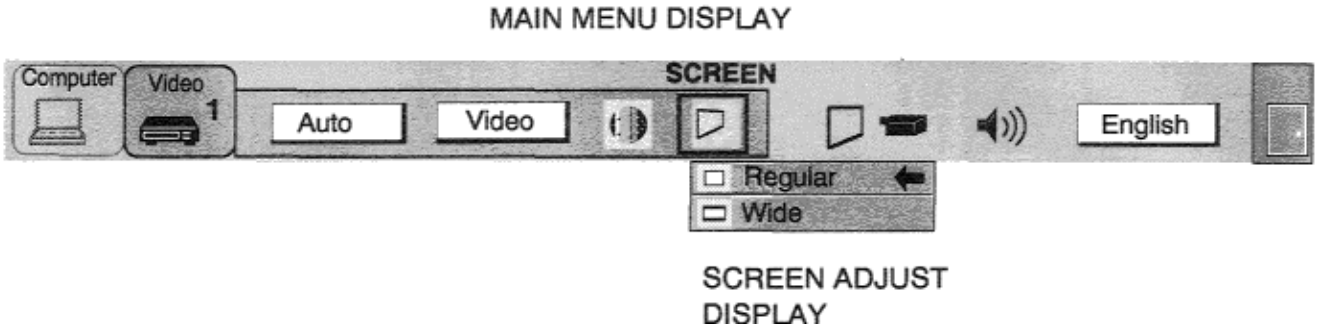

COMPUTER SYSTEM SELECT (COMPUTER MODE)

This projector is designed to accept different types of computer display signals based on VGA, SVGA, XGA or SXGA (See "COMPATIBLE COMPUTER SPECIFICATIONS" on the next page). If you set MODE SELECT to "COMPUTER", the projector will automatically process the incoming signal and project the proper image without any special setting. Although this will work in most cases, you may be required to manually set the projector for some computer signals. If the computer image is not reproduced properly, try the following procedure and switch to the computer display mode that you want to use.

1. Connect the COMPUTER and the PROJECTOR, and turn them on.
2. Set MODE SELECT to "COMPUTER MODE (1 or 2)". This shows the current display mode initially detected by the projector in the system window. And "Current mode" display appears.

NOTE: 1. If the projector cannot discriminate or detect the input signal from the computer, the "Go PC adj." display appears.

NOTE: 2. If no input signal from the computer, the "No signal" display appears on the screen.

3. Press the MENU BUTTON and the MAIN MENU DISPLAY dialog box will appear.
4. Press the POINT LEFT/RIGHT BUTTON(s) to select SYSTEM and press the SELECT (REAR CLICK) BUTTON. Another dialog box COMPUTER SYSTEM DISPLAY will appear.
5. Press the POINT DOWN BUTTON and a red arrow will appear.
6. If you want to change the display mode from the current one, move the arrow by press the POINT UP/DOWN BUTTON(s) to select one of the modes.
7. Press the SELECT (REAR CLICK) BUTTON and changed the display mode.
8. To quit the MENU, move the arrow to Quit and then press the SELECT (REAR CLICK) BUTTON.

MAIN MENU DISPLAY

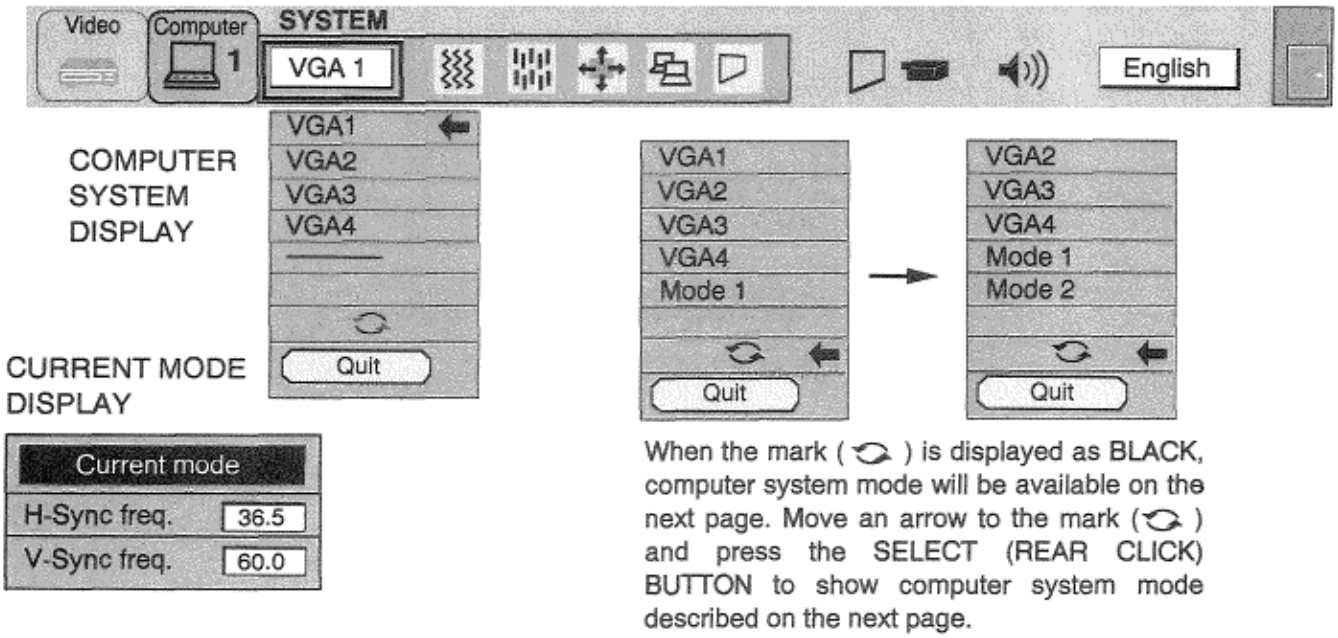

PC ADJUSTMENT

This is a special function that may be used when a computer image is not reproduced properly. (See the pages 42 -45 for more detail.)

COMPATIBLE COMPUTER

ON-SCREEN DISPLAY	RESOLUTION	H-Freq. (kHz)	V-Freq. (Hz)
VGA1	640 × 480	31.47	59.88
VGA2	720 × 400	31.47	70.09
VGA3	640 × 400	31.47	70.09
VGA4	640 × 480	37.86	74.38
VGA5	640 × 480	37.86	72.81
VGA6	640 × 480	37.50	75.00
MAC LC13	640 × 480	34.97	66.60
MAC 13	640 × 480	35.00	66.67
PC98	640 × 400	24.83	56.42
FM TOWNS	640 × 400	24.38	55.40
SVGA1	800 × 600	35.156	56.25
SVGA2	800 × 600	37.88	60.32
SVGA3	800 × 600	46.875	75.00
SVGA4	800 × 600	53.674	85.06
SVGA5	800 × 600	48.08	72.19
SVGA6	800 × 600	37.90	61.03
SVGA7	800 × 600	34.50	55.38
SVGA8	800 × 600	38.00	60.51
SVGA9	800 × 600	38.60	60.31
SVGA10	800 × 600	47.90	71.92
SVGA11	800 × 600	32.70	51.09
SVGA12	800 × 600	38.00	60.51
MAC 16	832 × 624	49.72	74.55
XGA1	1024 × 768	48.36	60.00
XGA2	1024 × 768	68.677	84.997
XGA3	1024 × 768	60.023	75.03
XGA4	1024 × 768	56.47	70.07
XGA5	1024 × 768	60.31	74.92
XGA6	1024 × 768	48.50	60.02
XGA7	1024 × 768	44.00	54.58
XGA8	1024 × 768	63.48	79.35

ON-SCREEN DISPLAY	RESOLUTION	H-Freq. (kHz)	V-Freq. (Hz)
XGA9	1024 × 768	36.00	87.17 (Interlace)
XGA10	1024 × 768	62.04	77.07
XGA11	1024 × 768	61.00	75.70
XGA12	1024 × 768	35.522	86.96 (Interlace)
XGA13	1024 × 768	46.90	58.20
XGA14	1024 × 768	47.00	58.30
MAC19	1024 × 768	60.24	75.08
SXGA1	1152 × 864	64.20	70.40
SXGA2	1280 × 1024	62.50	58.60
SXGA3	1280 × 1024	63.90	60.00
SXGA4	1280 × 1024	63.34	59.98
SXGA5	1280 × 1024	63.74	60.01
SXGA6	1280 × 1024	71.69	67.19
SXGA7	1280 × 1024	81.13	76.107
SXGA8	1280 × 1024	63.98	60.02
SXGA9	1280 × 1024	79.976	75.025
SXGA10	1280 × 960	60.00	60.00
SXGA11	1152 × 900	61.20	65.20
SXGA12	1152 × 900	71.40	75.60
SXGA13	1280 × 1024	50.00	86.00 (Interlace)
SXGA14	1280 × 1024	50.00	94.00 (Interlace)
SXGA15	1280 × 1024	63.37	60.01
SXGA16	1280 × 1024	76.97	72.00
SXGA17	1152 × 900	61.85	66.00
SXGA18	1280 × 1024	46.43	86.70 (Interlace)
SXGA19	1280 × 1024	63.79	60.18
MAC21	1152 × 870	68.68	75.06
MAC	1280 × 960	75.00	75.08
MAC	1280 × 1024	80.00	75.08

Specifications are subject to change without notice.

NOTE: Basically this projector can accept the signal from all computers with the above mentioned V, H-Frequency and less than 135 MHz of Dot Clock.

AUTO IMAGE FUNCTION (COMPUTER MODE)

The Auto image function can automatically adjust the Fine sync., Total dots and Screen position **for most computers.**

1. Press the MENU BUTTON and the MAIN MENU DISPLAY dialog box will appear.
2. Press the POINT LEFT/RIGHT BUTTON(s) to select AUTO IMAGE and press the SELECT (REAR CLICK) BUTTON. Another dialog box AUTO IMAGE SETTING DISPLAY will appear.
3. Press the POINT DOWN BUTTON and a red arrow will appear.
4. Move the arrow to an adjustment item(s) you want to adjust by pressing the POINT UP/DOWN BUTTON(s).
5. Change the setting "On", press the SELECT (REAR CLICK) BUTTON.
6. Move the arrow by pressing the POINT UP/DOWN BUTTON(s) to select "Go!" and then press the SELECT (REAR CLICK) BUTTON. The auto image function is started now. It will take about 10 seconds.
7. To store the settings, move the arrow to Stored and then press the SELECT (REAR CLICK) BUTTON. When you have stored the settings, "OK?" is displayed for confirmation.
8. Move the arrow to Yes and then press the SELECT (REAR CLICK) BUTTON. The stored settings are permanently held even if the MAIN ON/OFF is switched off.
9. To quit the MENU, point to Quit and then press the SELECT (REAR CLICK) BUTTON.
10. This setting is temporarily effective until you turn off the projector or change the input signal.

NOTE: Depending upon the connected Personal Computer, the fine sync., total dots and screen position may not be fully adjusted with the "Auto Image Function". In that case, use the "Picture Image" and/or "Picture Position" **adjustments (see pages 40** — 41) to make fine-adjust them after the "Auto Image Function" is executed.

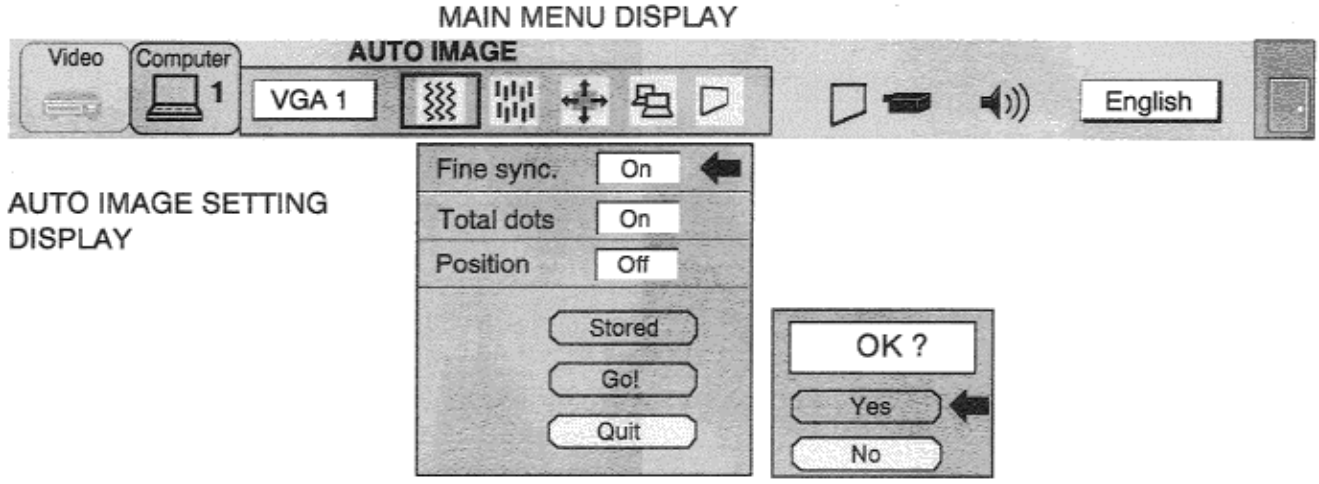

PICTURE IMAGE ADJUSTMENT (COMPUTER MODE)

Picture adjustments have been preset at the factory. If you want to change the setting, operate the projector as follows.

1. Press the MENU BUTTON and the MAIN MENU DISPLAY dialog box will appear.
2. Press the POINT LEFT/RIGHT BUTTON(s) to select IMAGE and press the SELECT (REAR CLICK) BUTTON. Another dialog box IMAGE ADJUST DISPLAY will appear. This shows the current picture settings.
3. In this dialog box, you can adjust to increase or decrease the setting levels
4. Press the POINT DOWN BUTTON and a red arrow will appear.
5. Move the arrow to an adjusting item you want to adjust by pressing the POINT UP/DOWN BUTTON(s).
6. To increase the level, point the arrow to A and then press the SELECT (REAR CLICK) BUTTON. To decrease the level, point the arrow to 7 and then press the SELECT (REAR CLICK) BUTTON.
7. You may want to store the settings to the memory so that you can recall them later. To store the settings, move the arrow to Stored and then press the SELECT (REAR CLICK) BUTTON. When you have stored the settings, you will see "OK ?" as a confirmation.
8. Move the arrow to Yes and then press the SELECT (REAR CLICK) BUTTON. The stored settings are permanently held even if the MAIN ON/OFF is switched off.
9. To quit the MENU, move the arrow to Quit and then press the SELECT (REAR CLICK) BUTTON.
10. If you do not want to store the settings, move the arrow to Quit and then press the SELECT (REAR CLICK) BUTTON. The settings changed are temporarily effective until you turn off the MAIN ON/OFF switch.
11. To recall the settings you have stored, move the arrow to Reset and then press the SELECT (REAR CLICK) BUTTON. When you have reset the settings, you will see "OK ?" as a confirmation, Move the arrow to Yes and then press the SELECT (REAR CLICK) BUTTON. You can adjust the settings again if needed.

MAIN MENU DISPLAY

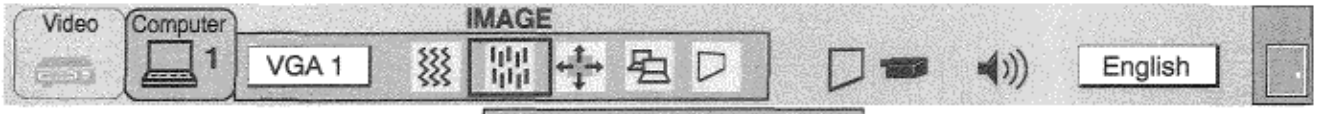

IMAGE ADJUST DISPLAY

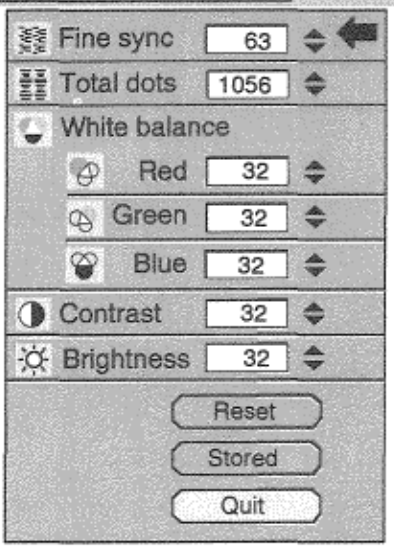

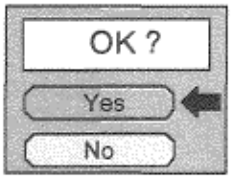

NOTE: The projector may not reproduce a proper image for some SXGA signals.
Since SXGA (1280 × 1024) image is converted to XGA (1024 × 768) image by partial scan, some lines and dots of the image do not appear.
The flicker on this compressed SXGA image cannot be eliminated even though you try to make a Fine sync adjustment.

TABLE OF PICTURE IMAGE ADJUSTMENT

FINE SYNC	Adjust the picture as necessary to eliminate flicker from the display.	0 ←→ 127
TOTAL DOTS	The number of the total dots in one horizontal period. Adjust the number to match your PC image.	
WHITE BALANCE (R/G/B)	DECREASE	0 ←→ 63 INCREASE
CONTRAST	LIGHTER	0 ←→ 63 DEEPER
BRIGHTNESS	DARKER	0 ←→ 63 BRIGHTER

PICTURE POSITION ADJUSTMENT (COMPUTER MODE)

1. Press the MENU BUTTON and the MAIN MENU DISPLAY dialog box will appear.
2. Press the POINT LEFT/RIGHT BUTTON(s) to select POSITION and press the SELECT (REAR CLICK) BUTTON. Another dialog box POSITION SETTING DISPLAY will appear.
3. Press the POINT DOWN BUTTON and a red arrow will appear.
4. Move the arrow to a direction (, , t or **4)** by pressing the POINT LEFT/RIGHT/UP/DOWN BUTTON(s) and press the SELECT (REAR CLICK) BUTTON to change the picture position.
5. You may want to store the settings to the memory so that you can recall them later. To store the settings, move the arrow to Stored and then press the SELECT (REAR CLICK) BUTTON. When you have stored the settings, you will see “OK ?“ as a confirmation.
6. Move the arrow to Yes and then press the SELECT (REAR CLICK) BUTTON. The stored settings are permanently held even if the MAIN ON/OFF is switched off.
7. To quit the MENU, move the arrow to Quit and then press the SELECT (REAR CLICK) BUTTON.
8. If you do not want to store the settings, move the arrow to Quit and then press the SELECT (REAR CLICK) BUTTON. The settings changed are temporarily effective until you turn off the MAIN ON/OFF switch.
9. To recall the settings you have stored, move the arrow to Reset and then press the SELECT (REAR CLICK) BUTTON. When you have reset the settings, you will see “OK ?“ as a confirmation. Move the arrow to Yes and then press the SELECT (REAR CLICK) BUTTON. You can adjust the settings again if required.

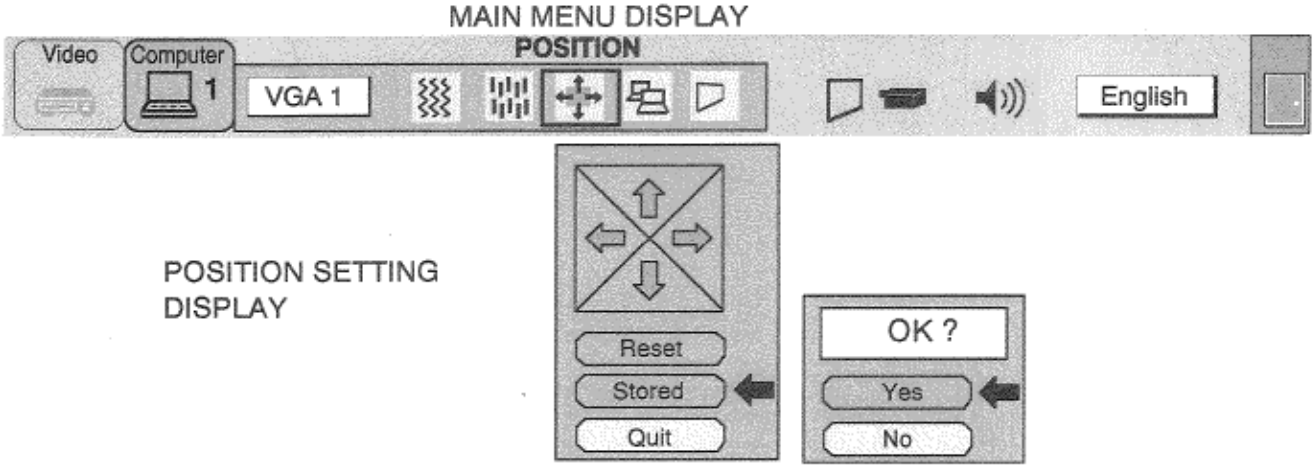

PC ADJUSTMENT

This projector can automatically detect the most display signals in most personal computers currently existing in the market. However, some computers output a special signal format which is different from the standard ones and may not be detected by this projector. If this case happens, the projector cannot reproduce a proper image, often recognized as a flickering picture, a non-synchronized picture, a non-centered picture or a skewed picture.

To project a proper image for those non-standard formats, this projector provides PC ADJUST, in which you can precisely adjust several parameters to match the input signal format. The projector has eight independent memory areas that you can store the parameter settings you have made. Therefore, you can recall the setting for a specific computer when you need it.

1. Press the MENU BUTTON and the MAIN MENU DISPLAY dialog box will appear.
2. Press the POINT LEFT/RIGHT BUTTON(s) to select PC ADJUST and press the SELECT (REAR CLICK) BUTTON. Another dialog box" Where to reserve" will appear.
3. In this dialog box, you will select one of the memory areas shown as "Mode 1" to "Mode 8". If the parameters have been previously set and stored to the memory, the status "Stored" will appear on a corresponding row. If not, "Free" will appear.
4. Press the POINT DOWN BUTTON and a red arrow will appear.
5. Move the arrow to one of the "Modes" (Free position) that you want to store by pressing the POINT UP/DOWN BUTTON(s). Press the SELECT (REAR CLICK) BUTTON to select it.

NOTE;If all modes are occupied, no new PC parameter data can be stored. In this case, clear the PC parameter data using the Mode free Function**.**

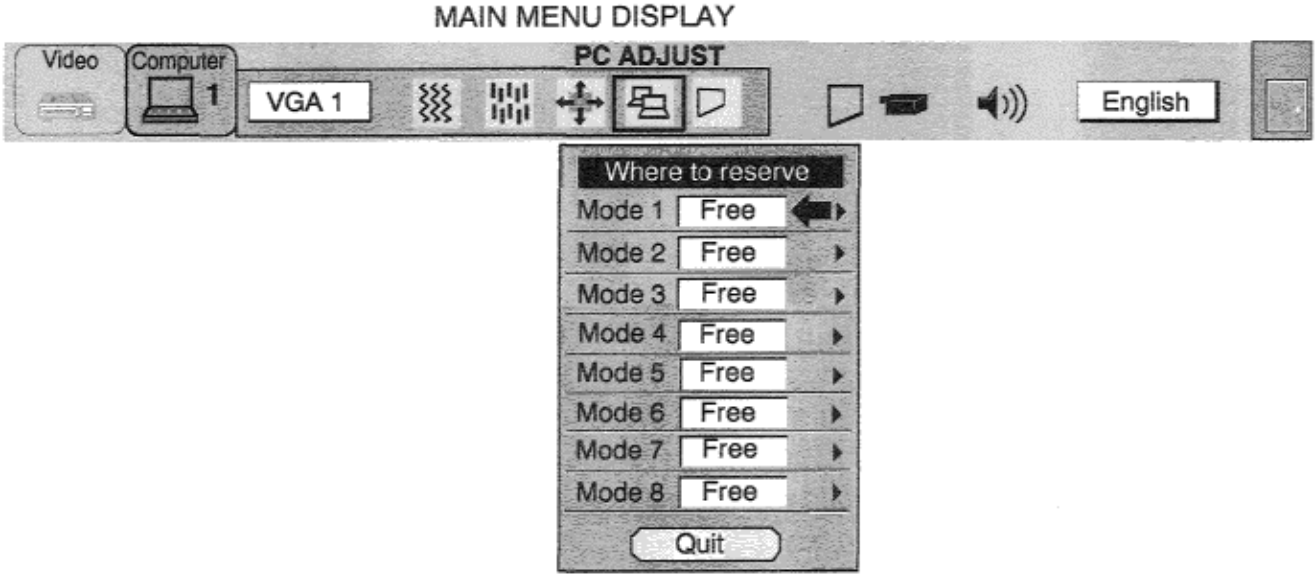

6. Another dialog box “PC ADJUSTMENT DISPLAY 1” will appear and the parameter data for the Mode you have selected is shown in this dialog box.
7. The parameters will be filled with the data determined by the projector according to the present signal input.
8. The function of the parameters and their values are summarized in the table as below.
9. Move the arrow to an adjusting item you want to adjust by pressing the POINT UP/DOWN BUTTON(s).
10. To increase the level, point the arrow to A and then press the SELECT (REAR CLICK) BUTTON. To decrease the level, point the arrow to 7 and then press the SELECT (REAR CLICK) BUTTON.
11. If you want to store the settings to the memory, move the arrow to Stored and press the SELECT (REAR CLICK) BUTTON. When you have stored the settings, you will see “OK ?” as a confirmation. Move the arrow to Yes and then press the SELECT (REAR CLICK) BUTTON.
12. To recall the parameter data before setting, move the arrow to Reset and then press the SELECT (REAR CLICK) BUTTON. When you have reset the settings, you will see “OK ?” as a confirmation. Move the arrow to Yes and then press the SELECT (REAR CLICK) BUTTON. You can adjust the settings again if required.
13. To quit the MENU, move the arrow to Quit and then press the SELECT (REAR CLICK) BUTTON.
14. If you quit the MENU without storing the settings to the memory, the parameter data you changed will not be kept.
15. The stored settings are permanently kept even if the MAIN ON/OFF is switched off.
16. When the adjustment of “Clamp”, “Height” and “Width” are required, move the arrow by pressing the POINT UP/DOWN BUTTON(s) to select (V). Press the SELECT (REAR CLICK) BUTTON.

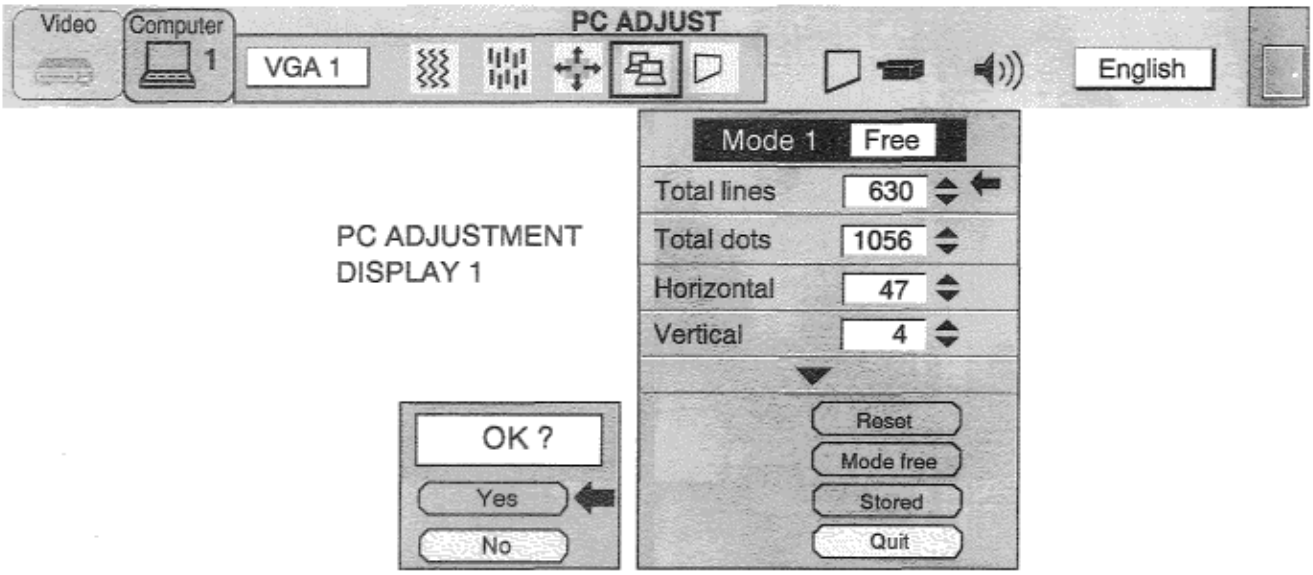

ITEM	FUNCTION
TOTAL LINES	The number of the total vertical lines. Adjust the number to match your PC image.
TOTAL DOTS	The number of the total dots in one horizontal period. Adjust the number to match your PC image
HORIZONTAL	Adjustment of the horizontal picture position. When the image is not centered on the screen, adjust this.
VERTICAL	Adjustment of the vertical picture position. When the image is not centered on the screen, adjust this.

17. Another dialog box “PC ADJUSTMENT DISPLAY 2” will appear and the parameter data for the Mode you have selected is shown in this dialog box.
18. Move the arrow to an adjusting item you want to adjust by pressing the POINT UP/DOWN BUTTON(s).
19. To increase the level, point the arrow to A and then press the SELECT (REAR CLICK) BUTTON. To decrease the level, point the arrow to 7 and then press the SELECT (REAR CLICK) BUTTON.
20. If you want to store the settings to the memory, move the arrow to Stored and press the SELECT (REAR CLICK) BUTTON. When you have stored the settings, you will see “OK ?“ as a confirmation. Move the arrow to Yes and then press the SELECT (REAR CLICK) BUTTON.
21, To recall the parameter data before settings, move the arrow to Reset and then press the SELECT (REAR CLICK) BUTTON. When you have reset the settings, you will see “OK ?“ as a confirmation. Move the arrow to Yes and then press the SELECT (REAR CLICK) BUTTON . You can adjust the settings again if needed.
22. To quit the MENU, move the arrow to Quit and then press the SELECT (REAR CLICK) BUTTON.
23. If you quit the MENU without storing the settings to the memory, the parameter data you changed will not be kept.
24. The stored settings are permanently kept even if the MAIN ON/OFF is switched off.

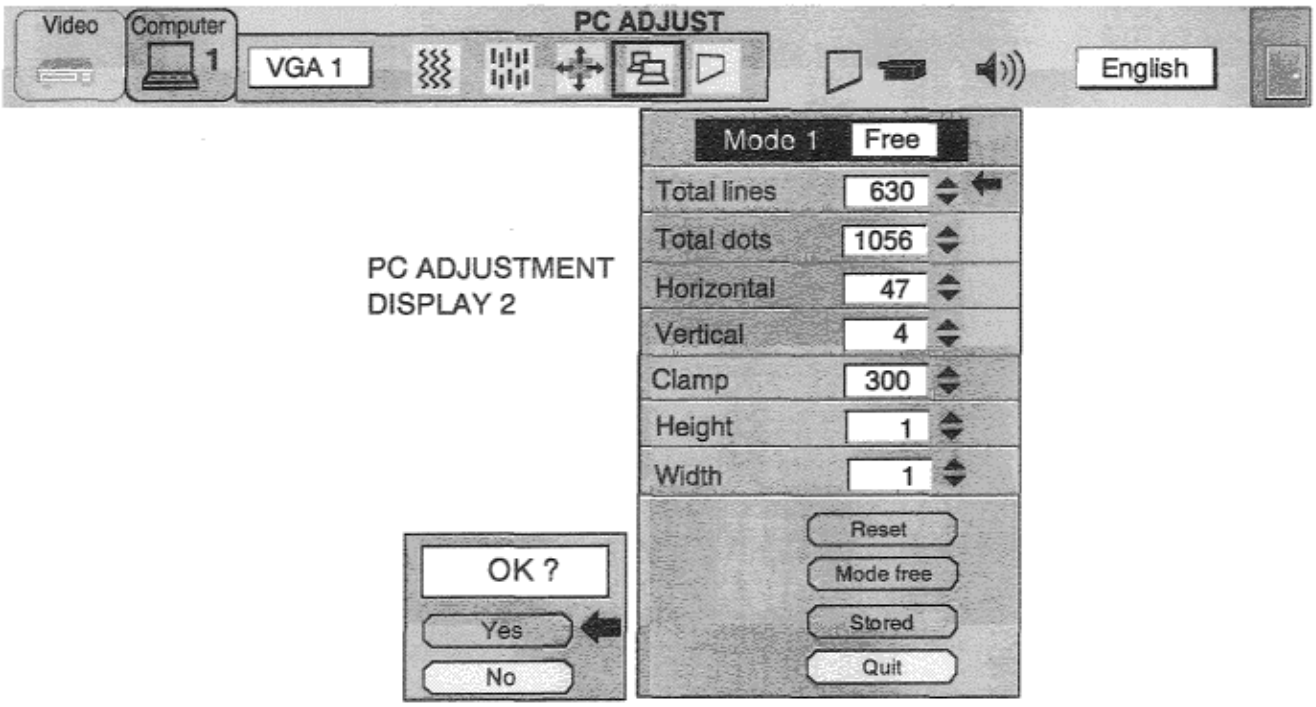

ITEM	FUNCTION
CLAMP	Adjustment of the clamp level. When the image has a dark bar, try this adjustment
HEIGHT	Expanding or compressing level for the vertical direction
WIDTH	Expanding or compressing level for the horizontal direction

MODE FREE

The Mode free function is designed to delete the parameter data produced by PC ADJUST.

1. Press the MENU BUTTON and the MAIN MENU DISPLAY dialog box will appear.
2. Press the POINT LEFT/RIGHT BUTTON(s) to select PC ADJUST and press the SELECT (REAR CLICK) BUTTON. Another dialog box " Where to reserve" will appear.
3. Press the POINT DOWN BUTTON and a red arrow will appear.
4. Move the arrow to one of the "Modes" (Stored position) that you want to delete by pressing the POINT UP/DOWN BUTTON(s). Press the SELECT (REAR CLICK) BUTTON. Another dialog box "PC ADJUSTMENT DISPLAY" will appear.
5. If you delete the parameter data, move the arrow by pressing the POINT UP/DOWN BUTTON(s) to select Mode free. Press the SELECT (REAR CLICK) BUTTON. You will see "OK?" as a confirmation.
6. Move the arrow to Yes and then press the SELECT (REAR CLICK) BUTTON to delete the parameter data.
7. To quit the MENU, move the arrow to Quit and then press the SELECT (REAR CLICK) BUTTON.

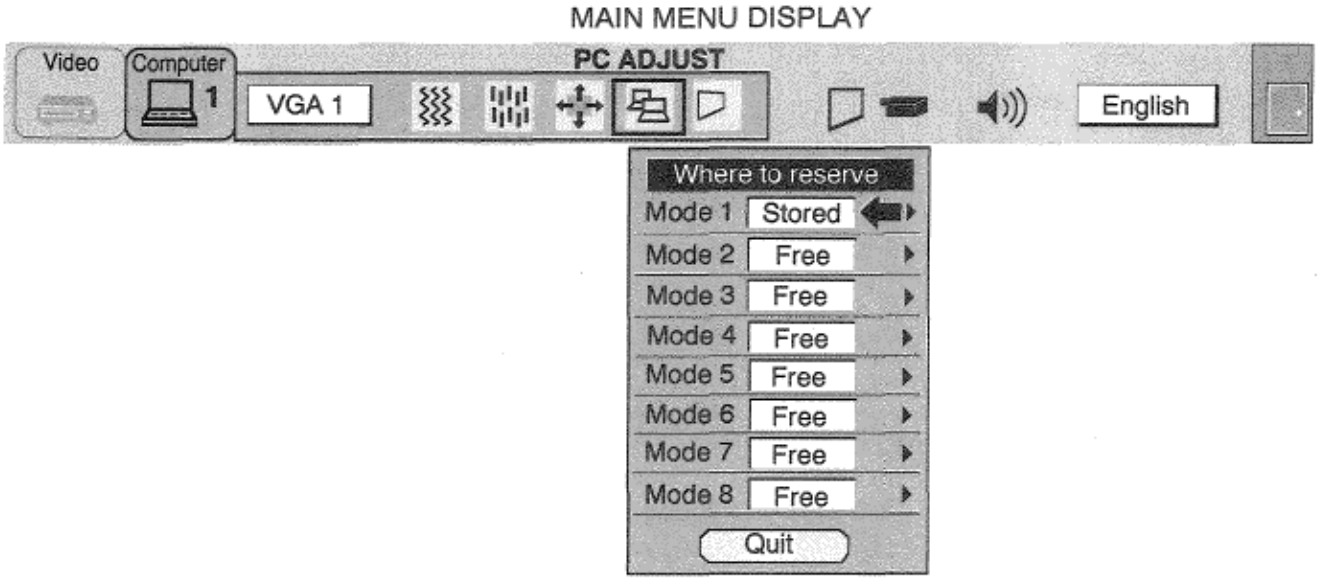

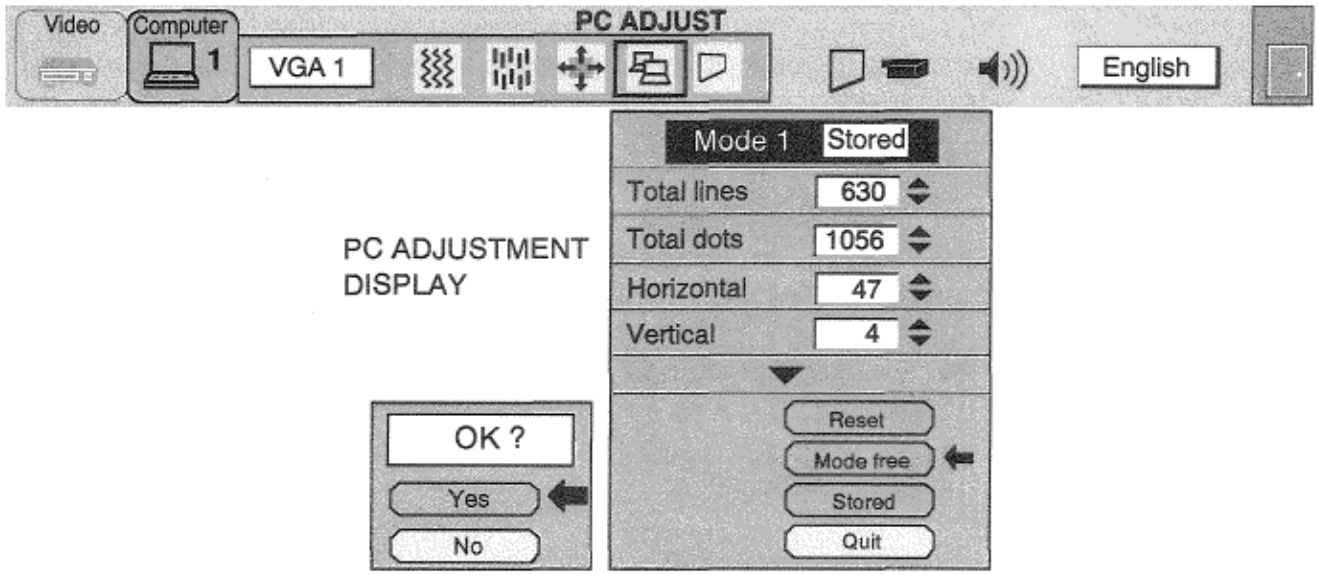

PICTURE SCREEN ADJUSTMENT (COMPUTER MODE)

This projector has a picture screen resize function, which enables you to project the image different size.

Input image resolution	True Mode	Expand Mode	Compressed Mode	Panning Mode
Less than XGA (1024 × 768) image			None	None
XGA (1024 × 768) image		None	None	None
More than XGA (1024 × 768) image	None	None		

1. Press the MENU BUTTON and the MAIN MENU DISPLAY dialog box will appear.
2. Press the POINT LEFT/RIGHT BUTTON(s) to select SCREEN and press the SELECT (REAR CLICK) BUTTON. Another dialog box SCREEN ADJUST DISPLAY will appear.
3. Press the POINT DOWN BUTTON and a red arrow will appear.
4. To switch to "Expand mode", move the arrow to Expand by pressing the POINT UP/DOWN BUTTON(s) and then press the SELECT (REAR CLICK) BUTTON. The mode is changed to "Expand".
5. To switch to "True mode", move the arrow to True by pressing the POINT UP/DOWN BUTTON(s) and then press the SELECT (REAR CLICK) BUTTON. The mode is changed to 'True".
6. To switch to "Compressed mode", move the arrow to Compressed by pressing the POINT UP/DOWN BUTTON(s) and then press the SELECT (REAR CLICK) BUTTON. The mode is changed to "Compressed".
7. To switch to "Panning mode", move the arrow to Panning by pressing the POINT UP/DOWN BUTTON(s) and then press the SELECT (REAR CLICK) BUTTON to change to "Panning".

Press the POINT UP/DOWN/LEFT/RIGHT BUTTON(s) to move the panning image position. The display of "Quit" is appearing on the screen during panning mode. If this display is disappeared, the panning mode is cancelled.

8. Press the SELECT (REAR CLICK) BUTTON to disappear the "Quit" display and panning mode is cancelled.
9. This setting is temporarily effective until you turn off the MAIN ON/OFF switch.

NOTE: The normal "Panning Operation" may not function properly if the computer system prepared with the "PC Adjust" is used.

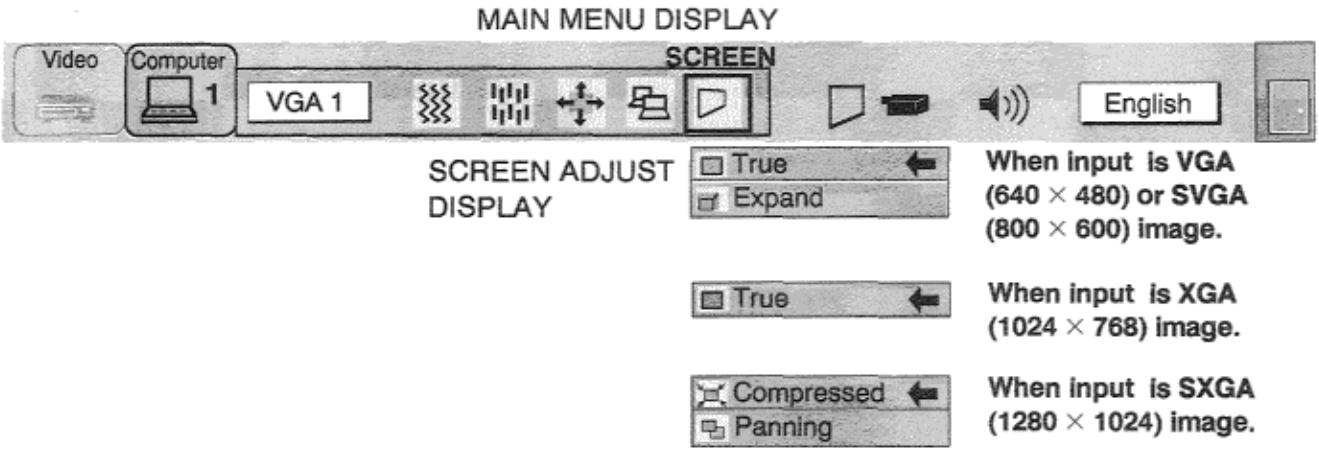

OTHER FUNCTION SETTING

This projector has other function settings; Blue back, Display, Reverse T/B, Reverse R/L, Split wipe and Lamp age.

BLUE BACK

When this function is in the “On” position, the projector will project a blue image without video noise on the screen when the video source is unplugged or turned off.

DISPLAY

When this function is in the “On” position, on-screen displays always appear when adjustments are made. Although these on-screen displays are very helpful, these may spoil the view if adjustments are made during presentations. To avoid this, you can keep back certain displays by switching this function “Off”. The followings are the displays that you can hide.

- Wait Display
- Mode Display
- Volume Display
- Mute Display
- Zoom/Focus/Lens shift Display
- Normal Display
- No show Display

REVERSE T/B

When this function is in the “On” position, the top/bottom picture reverse.

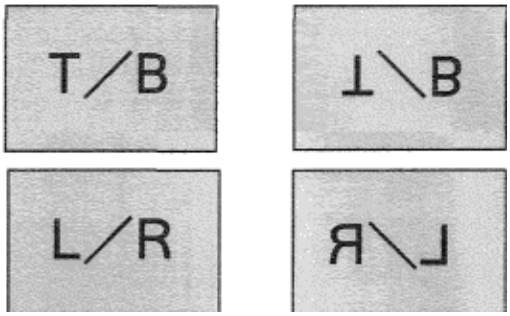

REVERSE L/R

When this function is in the “On” position, the left/right picture reverse capability lets you project onto a rear projection screen.

SPLIT WIPE

Turn SPLIT WIPE function On in the SETTING menu. The picture will change into next one by sliding black image side ways when the input source is changed.

Change the input source by MODE button. The picture is replaced by black image from side ways to the center, and the next one appears from the center to side ways like drawing the black curtains.

LAMP AGE

The Lamp age function is designed to reset the lamp replacement monitor timer. When replacing the lamp, reset the amp replacement monitor timer by using this function.

BLUE BACK, DISPLAY, REVERSE T/B, REVERSE L/R **AND SPLIT WIPE**

1. Press the MENU BUTTON and the MAIN MENU DISPLAY dialog box will appear.
2. Press the POINT LEFT/RIGHT BUTTON(s) to select SETTING and press the SELECT (REAR CLICK) BUTTON. Another dialog box SETTING DISPLAY will appear.
3. Press the POINT DOWN BUTTON and a red arrow will appear.
4. Move the arrow to an item you want to set by pressing the POINT UP/DOWN BUTTON(s).
5. If you want to change the setting (On or Off), press the SELECT (REAR CLICK) BUTTON.
6. To quit the MENU, point to Quit and then press the SELECT (REAR CLICK) BUTTON.
7. The settings are permanently kept even if the MAIN ON/OFF is switched off.

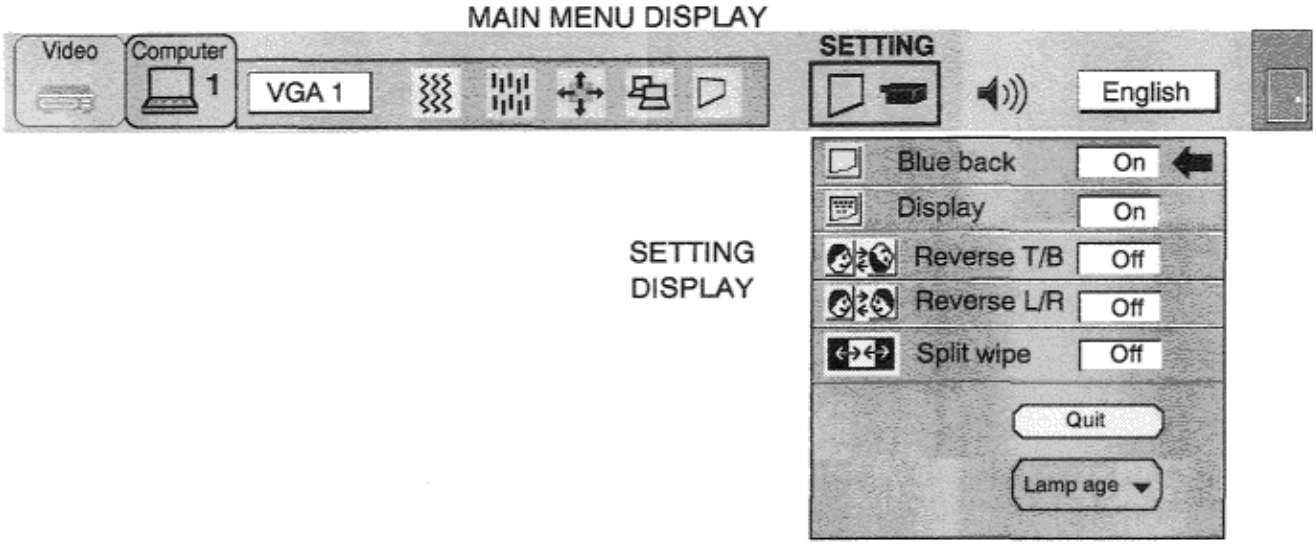

LAMP AGE

NOTE: Do not reset the LAMP REPLACEMENT MONITOR TIMER, except after the lamp is replaced.

1. Press the MENU BUTTON and the MAIN MENU DISPLAY dialog box will appear.
2. Press the POINT LEFT/RIGHT BUTTON(s) to select SETTING and press the SELECT (REAR CLICK) BUTTON. Another dialog box SETTING DISPLAY will appear.
3. Press the POINT DOWN BUTTON and a red arrow will appear.
4. Move the arrow by pressing the POINT UP/DOWN BUTTON(s) to select Lamp age and then press the SELECT (REAR CLICK) BUTTON. When you reset the lamp replace monitor, “lamp replace monitor reset?” is displayed for confirmation.
5. Move the arrow to Yes and then press the SELECT (REAR CLICK) BUTTON, “OK?” is displayed for confirmation. Move the arrow to Yes and then press the SELECT (REAR CLICK) BUTTON, the lamp replace monitor is reset.
6. Move the arrow to No and then press the SELECT (REAR CLICK) BUTTON. The lamp replace monitor is not reset.
7. To quit the MENU, move the arrow to Quit and then press the SELECT (REAR CLICK) BUTTON.

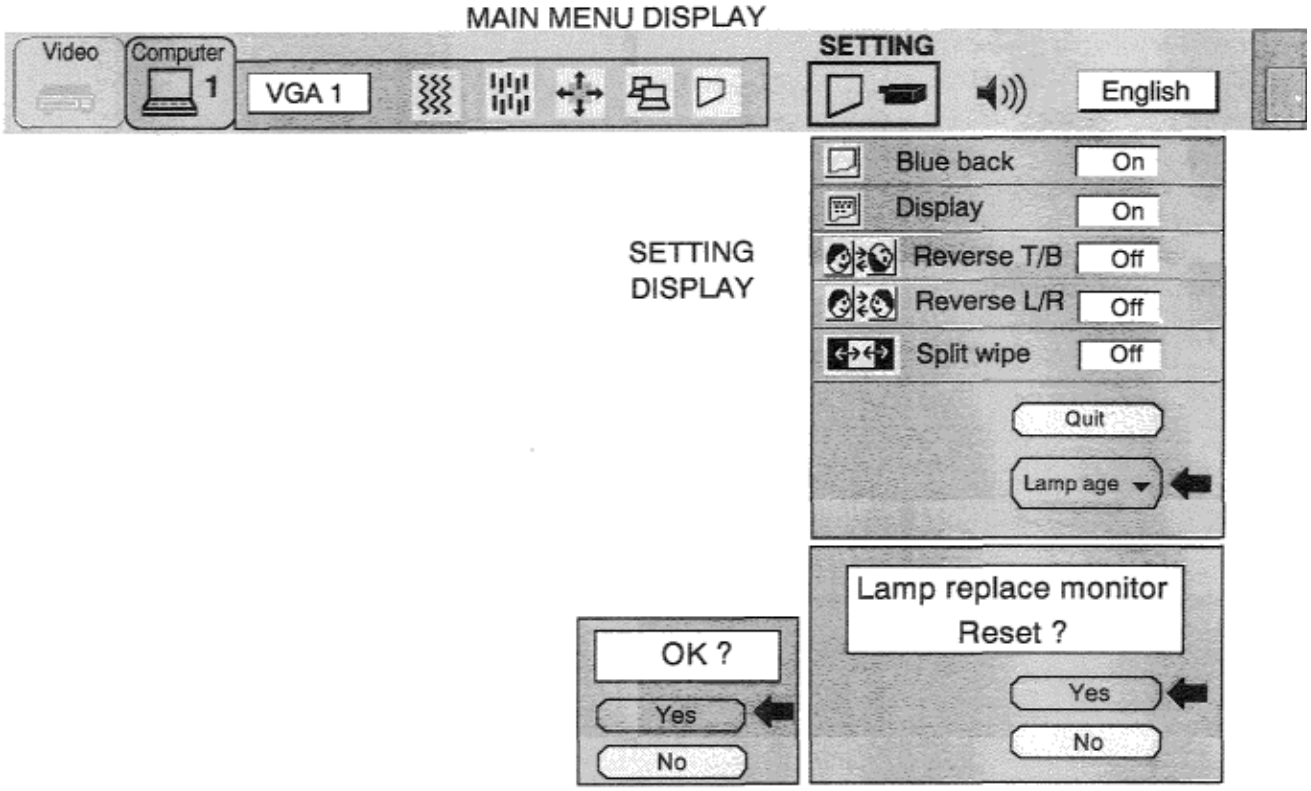

AIR FILTER CARE AND CLEANING

The removable air filter prevents dust from accumulating on the surface of the projection lens and projection mirror. Should the air filter become clogged with dust particles, it will reduce the cooling fan's effectiveness and may result in internal heat build up and reduce the life of the projector.

To clean the air filter, follow the cleaning procedures below:

1. Turn the LAMP POWER ON/OFF button OFF.
2. Remove the air filter cover.
3. Remove the air filter and sponge from the filter cover.
4. Clean the air filter with a vacuum cleaner.
5. Replace the air filter and sponge. Make sure that air filter cover is fully inserted.

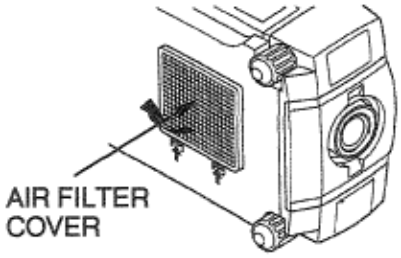

Do not clean with water. Doing so may damage the air filter.
Do not operate the projector with air filter removed.

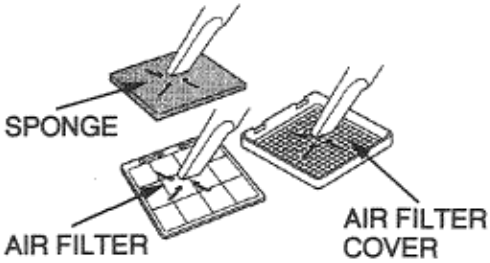

RECOMMENDATION

TO ENJOY PICTURE IMAGE, USE THE PROJECTOR IN THE CLEAN ENVIRONMENT. USAGE IN THE CLEAN ENVIRONMENT IS RECOMMENDED,

When used under the dusty or smoky conditions, dust may accumulate on the liquid crystal panel and lens inside it, and may resultantly be projected on the screen together with the picture.

When the above symptoms are noticed contact the place where your authorized dealer or service station for the cleaning.

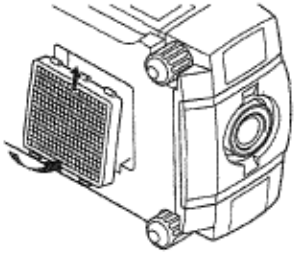

TEMPERATURE WARNING INDICATOR

The TEMPERATURE WARNING INDICATOR flashes red when the internal temperature of the projector exceeds the normal temperature.

Possible causes for the temperature warning may be:

1. Ventilation slots of the projector are blocked. In such an event, reposition the projector so that ventilation slots are not obstructed.

2. Air filter is clogged with dust particles. Remove dust from the air filter by following instructions in the Air Filter Care and Cleaning section above.

If the TEMPERATURE WARNING INDICATOR still continues to flash after checking (1) and (2), call your authorized dealer or service station.

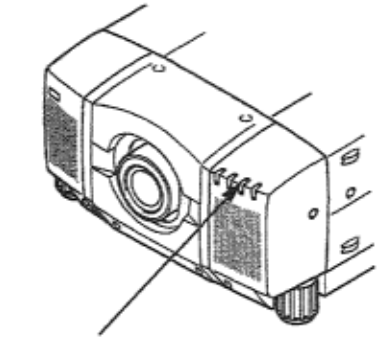

LAMP REPLACEMENT

If the lamp fails to come on and the lamp monitor on the projector light is orange, you must replace the bulb.

•For continued safety, replace with a lamp assembly of the same type.
•Allow the projector to cool for at least 45 minutes before you open the lamp cover, The inside of the projector can become very hot.
•Do not drop the lamp module or touch the glass bulb I The glass can shatter and cause injury.

Follow these steps to replace the lamp assembly.

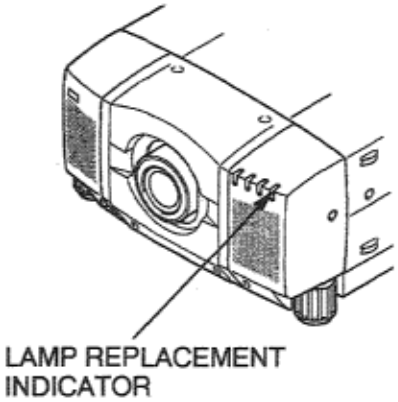

1. Turn off the projector and allow the projector to cool thoroughly.
2. Disconnect the AC cord from the projector.
3. Remove 2 screws with a screwdriver and disconnect the lamp cover.
4. Remove 2 screws with a screwdriver and pull out the lamp assembly by grasping the handle.
5. Replace the lamp assembly.
6. Tighten 4 screws to secure the lamp cover to the lamp assembly.
7. Connect the detachable AC cord to the projector.

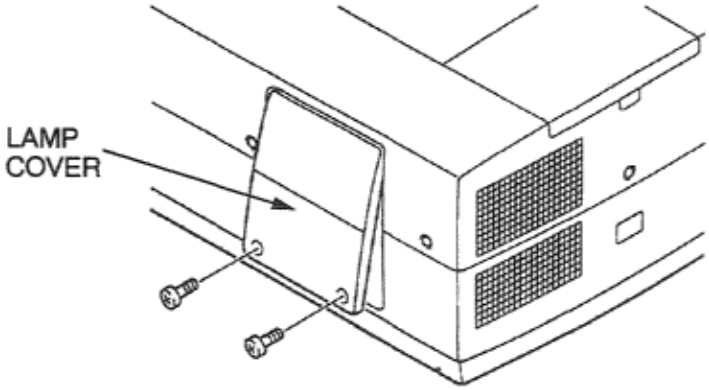

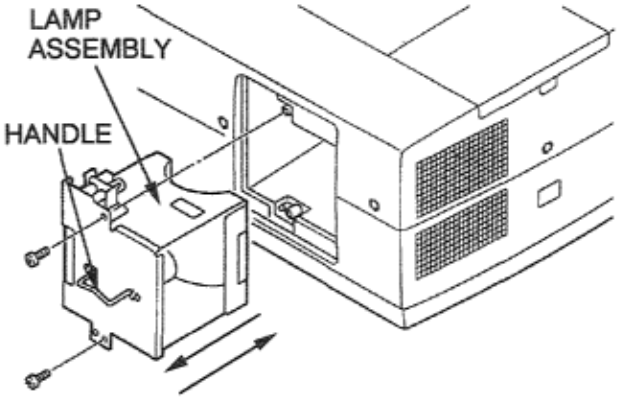

8. Reset the lamp replacement monitor timer. (See “LAMP AGE” section on page 49.)

NOTE: Do not reset the LAMP REPLACEMENT MONITOR TIMER, except after the lamp is replaced.

NOTE ON THE LAMP REPLACE INDICATOR

The LAMP REPLACE INDICATOR indicates the guide of the lamp life.
It is unnecessary to replace the lamp immediately if the projector is operating normally with the indicator on.
If the LAMP REPLACE INDICATOR is lit and the power is not be turned on by pressing the power button (Power is turned off approximately 20 seconds after power button is pressed.), the lamp replacement is required. Please contact a service for the lamp replacement.

CLEANING THE LENS

Follow these steps to clean the projection lens:

1. Apply a non-abrasive camera lens cleaner to a soft, dry cleaning cloth. Avoid using an excessive amount of cleaner. Abrasive cleaners, solvents or other harsh chemicals might scratch the lens.
2. Lightly wipe the cleaning cloth over the lens.
3. If you don't intend to use the projector immediately, replace the lens cover.

TROUBLESHOOTING

Problem	Try these Solutions:
No power	• Plug the projector into an AC outlet • Turn the MAIN ON/OFF button to ON • Be sure the READY INDICATOR light is ON NOTE: After pressing the LAMP POWER ON/OFF button to OFF. The projector functions as follows. 1. The LAMP POWER indicator will light and the READY indicator will turn off, 2. After one minute, the READY indicator will light green again and the projector may be turned on by pressing the LAMP POWER ON/OFF button. • Check temperature warning indicator. If the indicator flashes red, the projector cannot be turned on. (See "USING THE PROJECTOR" section on page 29). • Check the projection lamp.
No image	•Check if computer or video cables are connected to the Projector and the computer or video equipment. • Check the color system. (Video Mode). • Check the computer system. (Computer Mode).
Image is out of focus	•Adjust the focus. • Make sure the projection screen is at least 3.6 .feet (1.1 m) from the projector. • Check if the projection lens is dark. NOTE: Moving the projector from a cool temperature location to a warm temperature location may result in moisture condensation on the lens. In such an event, leave the projector OFF and wait until condensation disappears.

Problem:	Try these Solutions:
Picture is T/B inverted.	Check Reverse T/B feature. (See "OTHER FUNCTION SETTING" section on pages 47—48).
Picture is LJR **Reversed.**	Check Reverse L/R feature. (See "OTHER FUNCTION SETTING" section on pages 47—48).
Some displays are not seen during the operation.	Check Display feature. (See "OTHER FUNCTION SETTING" section on pages 47—48).
No Sound.	• Check audio cable connection from audio input source. •Adjust audio source. • Press the VOLUME (+) button. • Press the MUTE button.
Remote control unit doesn't work.	• Check the batteries. • Make sure nothing is blocking between the remote control sensor and remote control unit. • Make sure you are not too far from the projector when using the remote control unit. {Maximum operate range 16.4 feet (5 m)}.
Wireless mouse function does not work.	• Check the cable connection between the projector and the computer. • Check the mouse setting on your computer. •Turn on the projector before you turn on the computer.

TECHNICAL SPECIFICATIONS

Projector Type	Multi-media Projector
Dimensions (W x H x D)	15.4” (390 mm) x 9.2” (234 mm) x 22.9” (582 mm)
Net Weight	38.2 lbs (17.3 kg)
LCD Panel System	1.8” TFT Active Matrix type (Thin Film Transistor) x 3
Number of Pixels	2,359,296 {786,432 (1,024 x 768) x 3}
Color System	6 color system (PAL, SECAM, NTSC, NTSC4.43, PAL-M and PAL-N)
Scanning Frequency	H-sync. 15 — 80 KHz, V-sync. 50 - 100 Hz
Projection Image Size (Diagonal)	Adjustable from 30” to 600”
Contrast Ratio	100:1 (ANSI)
Horizontal Resolution	800 TV lines
Projection Lens	F2.6 — 3.5, f67.3mm — 107.6mm with Motor zoom and focus
Motorized Lens Shift	± 760 mm on 100” screen
Throw Distance	3.6’ (1.1 m) —73.2’ (22.3 m)
Projection Lamp	Metal Halide, 400 watt type
Projection Mirror	Dichroic mirror and X-prism system
AV Input jacks	BNC Type {Video/Y, C/Cb (B-Y), Cr (R-Y)} X 2 set RCA Type (Audio R and L) x 2 set and DIN 4 pin (S-Video) x 2 set
Video Monitor Output Jack	BNC Type {Video/Y, C/Cb (B-Y), Cr (R-Y)} x 1 set and DIN 4 pin (S-Video) x 1 set
Audio Monitor Output Jack	RCA Type (R and L) X 1 set
Computer Input 1 Jack	BNC Type (R, G, B, H and V), Multi-pole 12 pin (Control port) and USB port
Computer Input 2 Jack	(VGA) HDB15 Terminal, Multi-pole 12 pin (Control port) and USB port
Computer Audio Input Jack	RCAType (R and L)x2set
Computer Output Jack	(VGA) HDB15 Terminal
Computer Audio Output Jack	RCA Type (R and L) X 1 set
Other Jack	Wired Remote Jack and Serial port (DB 9)
Built-in Speaker	(2) 5 cm x 9 cm, Stereo (R and L), 3 watt + 3 watt (Music Power)
Image Elevation Adjustment	Up to 4°
Voltage	100-120V AC, 50/60 Hz
Power Consumption	7.OA (Max. Ampere)
Operating Temperature	5°C — 35°C
Storage Temperature	-10°C ~ 60°C
Remote Control Battery	(2) AA Type x 2 set

This symbol on the nameplate means the product is Listed by Underwriters Laboratories Inc. It is designed and manufactured to meet rigid U.L. safety standards against risk of fire, casualty and electrical hazards.

-MEMO-

Audio Visual/Video Products

EIKI INTERNATIONAL, INC.
26794 Vista Terrace Drive, Lake Forest, CA. 92630-8113
TEL (949) 457-0200 FAX (949) 457-7878

IN CANADA, EIKI CANADA
865 Heritage Drive P.O. Box 156
Midland Ontario L4R 4K8 Canada
TEL (705) 527-4084 FAX (705) 527-4087

Printed in Japan
Part No. 610 277 7727 (1AA6P1P1585A- M6MH-A)

© 1998 Eiki International,Inc.