USA's primary source for projector lamps
myprojectorlamps

PROJECTOR OWNER'S MANUAL

Eiki

EIP-XSP2500

Need a replacement lamp for this projector?

www.myprojectorlamps.com

Original manufacturer manual, provided unmodified as a courtesy of MyProjectorLamps.com.
All trademarks belong to their respective owners.

EIKI

DLP Projector

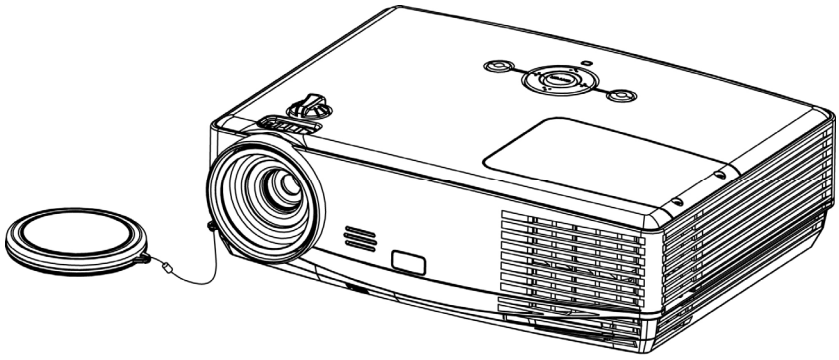

EIP-XSP2500

Owner's Manual

Introduction

Features

The projector equips high-performance of optical projection and user-friendly design

The projector offers the following features.

- Short throw projection
- Quick auto search speeding up the signal detecting process
- Digital keystone correction and high quality full screen image re-scaling
- Capable to display 16.7 million colors
- Multi-language On-Screen Display (OSD) menus
- Component HDTV compatibility (YPbPr)

Table of Contents

Package Overview 1
Standard Contents 1
Important Safety Instructions 2
Safety Labels 6
Projector Outlook 7
Connection 9
Connect to Computer or Laptop for LAN Function 10
Remote Control 11
Controls and Functions 11
Remote Control Effective Range 12
Replacing the Battery 12
Setting Up 13
Power on the Projector 13
Power off the Projector 14
Positioning 15
Projection Dimensions 16
Menu Operation 18
Menu/ Source 18
Menu/ Picture 19
Menu/ Display 20
Menu/ System Setup-Basic 21
Menu/ System Setup-Advance 22
Menu/ Information 23
Use LAN Function (Optional) 24
Network Control for Web 25
Maintenance 27
Care of the Projector 27
Cleaning the Lens 27
Cleaning the Projector Case 27
Storing the Projector 27
Transporting the Projector 27
Lamp Information 28
Getting to Know the Lamp Hour 28
Timing for Replacing the Lamp 28
Replacing the Lamp 28
Resetting the Lamp Timer 30
Trouble Shooting 31
LED Indicator 32

Specifications 33
Projector Specification 33
Configurations of Terminal 34
Dimension 37
Timing Chart 38

Package Overview

Carefully unpack and verify the package. The projector comes with all the items listed as below. Make sure your unit is complete. Contact your dealer immediately if anything is missing.

Standard Contents

1. Projector

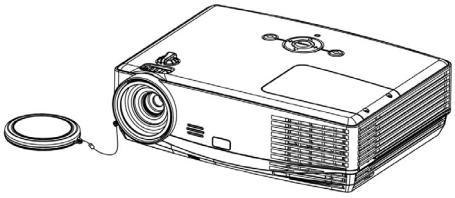

2. VGA Cable

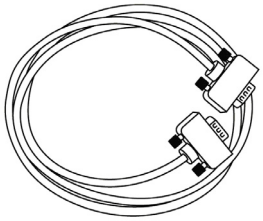

3. Power cord

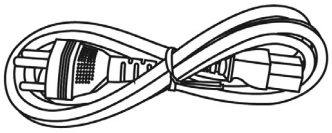

4. Owner's manual CD

5. Remote control with Lithium battery CR2025

The supplied accessories will be suitable for your region. Due to the difference in applications for each country, some regions may have different accessories.

Important Safety Instructions

Safety Instructions

The projector is designed and tested to meet the latest standards for safety of information technology equipment. However, to ensure safe use of this product, it is important that you follow the instructions mentioned in this manual and marked on the product.

WARNING This symbol indicates information that, if ignored, could possibly result in personal injury or even death.

CAUTION This symbol indicates information that, if ignored, could result in personal injury or physical damage.

Typical Symbols

This symbol indicates an additional warning (including cautions).
An illustration is provided to clarify the contents (for example: the illustration to the left indicates danger of electrical shock).

This symbol indicates a prohibited action. The contents will be clearly indicated in an illustration or description near the symbol (for example: the symbol to the left indicates that disassembly is prohibited).

This symbol indicates a compulsory action. The contents will be clearly indicated in an illustration or description near the symbol
(for example: the symbol to the left shows that the power plug should be disconnected from the power outlet).

⚠ WARNING

If a problem should occur

If smoke or strange odors arise, continued use could result in fire or electrical shock. In such case, immediately turn off the power switch and then disconnect the power plug from the power outlet. After making sure that the smoke or odor has stopped, contact your dealer for repairs. Never attempt to make repairs yourself because this is dangerous.

Do not use this projector if there is no image or sound, or if the sound is distorted. Continued use could result in fire or electrical shock. In such case, immediately turn off the power switch; disconnect the power plug from the power outlet and contact your dealer.

If water would enter the inside of this projector, immediately turn off the power switch, disconnect the power plug from the power outlet and contact your dealer.

Do not install on an unstable surface.
Do not install this projector on an unstable surface such as a wobbly stand or incline because this could result in the projector falling and causing injury.

Do not open the cabinet.
Never open the cabinet. There is high voltage inside which can cause electrical shock. Contact your dealer for internal inspection, adjustment and repair.

Do not modify.
Do not modify this projector because this could result in fire or electrical shock.

NO SIDEWARD

Do not place the projector upon either side to project an image.

NO DOWNWARD

Do not point the projector down to project an image.

Do not use in the bathroom or near water site.
Do not expose this unit to rain or use near water… for example, in the bathroom, a wet basement, near a swimming pool, etc…

Do not insert objects into the Projector.
Do not insert metal objects through the ventilation openings, etc., of this projector or drop such objects inside because this could result in fire or electrical shock.

If a foreign object should enter this projector, immediately turn off the power switch, disconnect the power plug from the power outlet and contact your dealer.

Continued use could result in fire or electrical shock. Use special caution in household and where children are present.

WARNING

Do not look through the lens when the lamp is on.
Never look through the lens when the lamp is on. The powerful light could adversely affect vision. Use special caution in households where children are present.

Avoid shock or impact on the projector.
If the projector should fall, resulting in damage to the cabinet, immediately turn off the power switch, disconnect the power plug from the power outlet and contact your dealer.
Continued use could result in fire or electrical shock.

Do not place this projector in a container containing liquid. Do not place flower vases, flowerpots, cups, cosmetics, liquids such as water, etc., on top of this projector.

Do not use any power cable except those supplied with the projector.
The use of any other power cable could result in fire or electrical shock.

High temperatures are generated when the lamp is lit; so do not place objects in front of the lens.

Allowing the proper amount of space on the top, sides, and rear of the projector cabinet is critical for proper air circulation and cooling of the unit.
The dimension shown here indicate the minimum space required. If the projector is to be built into a compartment or similarly enclosed, these minimum distances must be maintained.

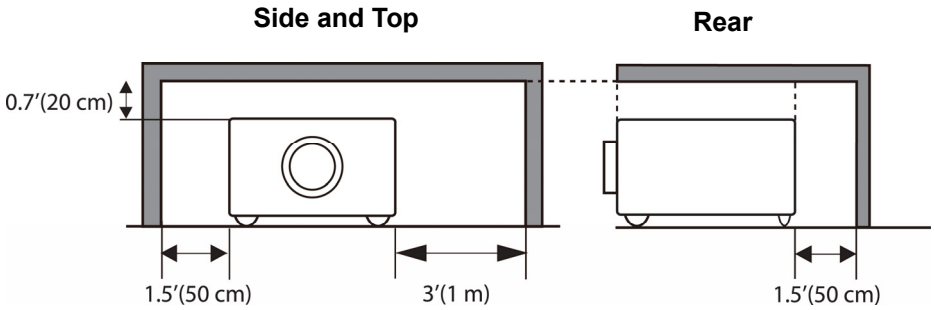

⚠ CAUTION

Placing heavy objects on top of this projector could result in loss of balance or falling and cause personal injury or damage the projector.

Do not block the ventilation openings of this projector.
Blocking ventilation could lead to internal overheating which could result in fire.

Do not place this projector on its side during use or push it into a small, poorly ventilated location.

Do not place this projector on a carpet or bedding or cover it with a tablecloth, etc.

Care and maintenance.
For safety purposes, disconnect the power plug from the power outlet before starting the careand maintenance of this projector.

Battery usage.
Replace the batteries with the same type only.
Do not mix old and new batteries; this could result in fire or personal injury due to battery cracking or leakage.

Make sure the plus and minus terminals are correctly aligned when loading the batteries.
Incorrect loading could result in personal injury or contamination of the surroundings due to battery cracking or leakage.

Have the projector interior cleaned regularly.

Contact your dealer to arrange for the service.
Accumulations of dust inside the projector can result in fire or malfunction if not cleaned for an extended period.
Ask your dealer for details about internal cleaning.

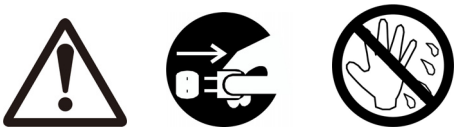

Safety Labels

Safety labels are used on or within the projector to alert you to items or areas requiring your attention.

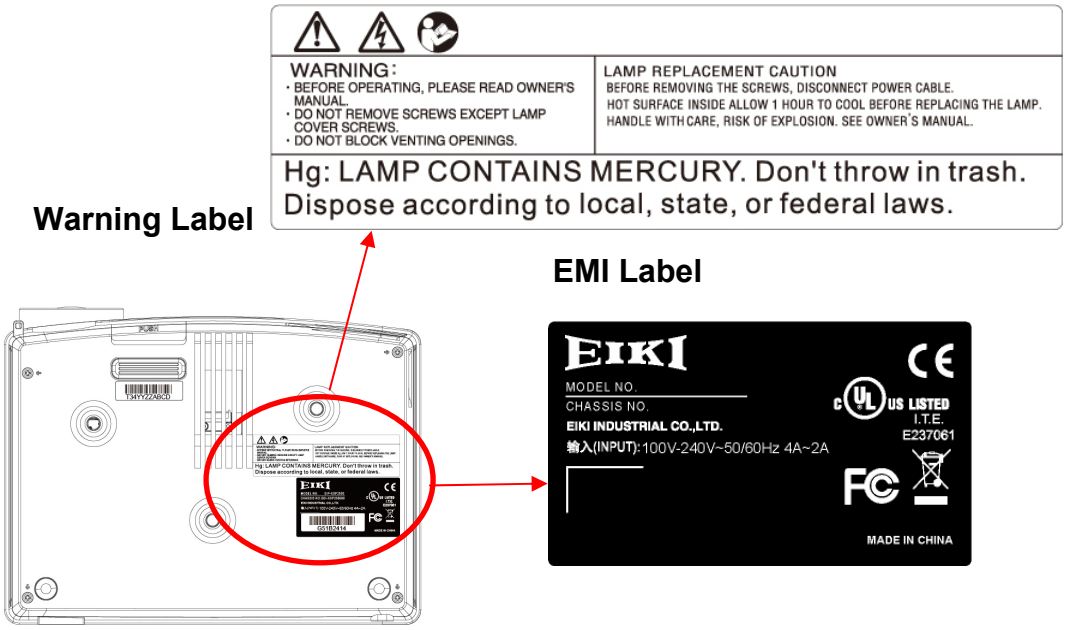

Projector Outlook

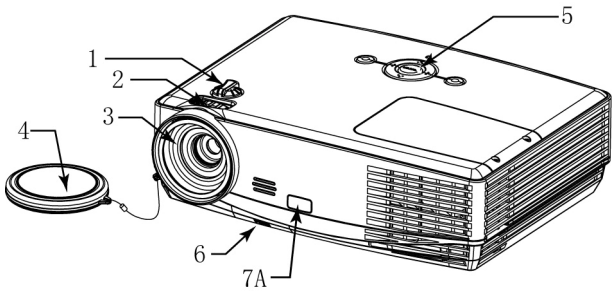

Rear

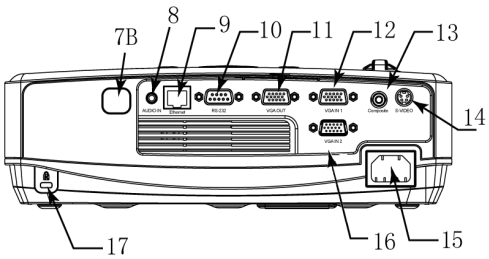

1. **Lens Shift**

   Adjust the position of projection screen up and down.

2. **Focus Ring**

   Use the focus ring to focus the projector image.

   Rotate the focus ring until the image is clear.

3. **Projection Lens**

4. **Lens Cover**

5. **Control Buttons**

   Operating system.

6. **Adjustable foot stand button**

   Press the button to lift or lower the adjustable foot stand.

7A. Front IR receiver sensor

7B. Rear IR receiver sensor

8. **Audio phone jack**

9. **LAN**

   Network Control application (Please refer to page 24)

10. **RS-232C**

    Serial data port for controlling the projector with a computer or other RS-232C control device.

11. **VGA OUT**

    Connect an external monitor to this connection to view the “RGB IN” input.

12. **VGA IN 1**

    Input signal from a computer.

13. **Composite**

    Composite video signal from a video source.

14. **S-Video**

    S-Video signal from a video source.

15. **Power Cord**

16. **VGA IN 2**

    Input signal from a computer.

17. **Kensington Security Slot**

Bottom

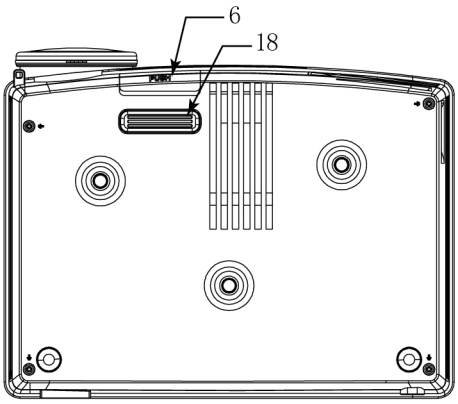

Control Buttons

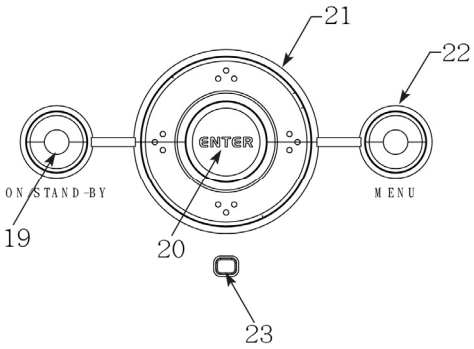

6. Adjustable Foot Stand button

Press the button to lift or lower the adjustable foot stand.

18. Adjustable foot stand

Extent and retract to adjust the projection angle.

19. ON/ STAND-BY button

To power on/ off the projector

20. Enter button

To execute the OSD selection

21. UP/ Down/ Left/Right button

To adjust the OSD menu

22. Menu button

To enter the OSD menu

23. LED indicator

To indicate the status of projector operation

Please refer page 32 for LED indicator

⚠ Warning

- **THIS APPARATUS IS REQUIRED TO BE EARTHED.**
- **When installing the projector, connect the power plug to an easily accessible socket-outlet near the projector. If errors occur during operating the projector, please switch the power supply off, or disconnect the power plug.**

Connection

When connecting a signal source to the projector, be sure to:

1 Turn off the power of all devices before connection.

2 Use the correct signal cables for each source.

3 Ensure the cables are firmly inserted.

☞Some cables may not be included in the projector (see "Standard contents" on page 1). They are commercially available in electronics stores.

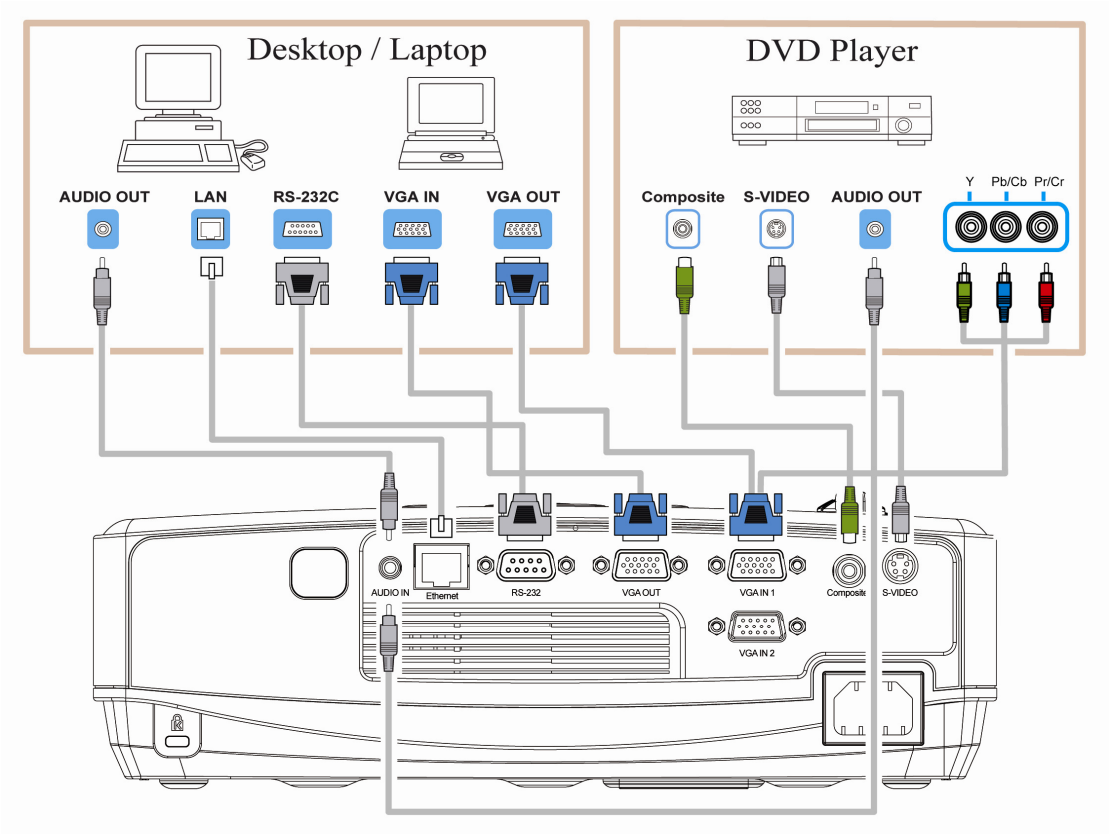

☞ Many laptops do not turn on their external video ports when connecting to a projector. Usually press a key combo such as FN + F3 or CRT/LCD key to turn the external display on/off. Locate a function key labeled as CRT/LCD or a function key with a monitor symbol on the notebook. Press FN and the labeled function key simultaneously to. Refer to your laptop's documentation to find your notebook's key combination

Connect to Computer or Laptop for LAN Function

1 Connect different intra net ports via using LAN cables or link computer and projector through IP router.

2 Press menu of the projector and select Information Item to find IP address

3 Input IP address to link the computer and projector so that the projector can be controlled by computer.

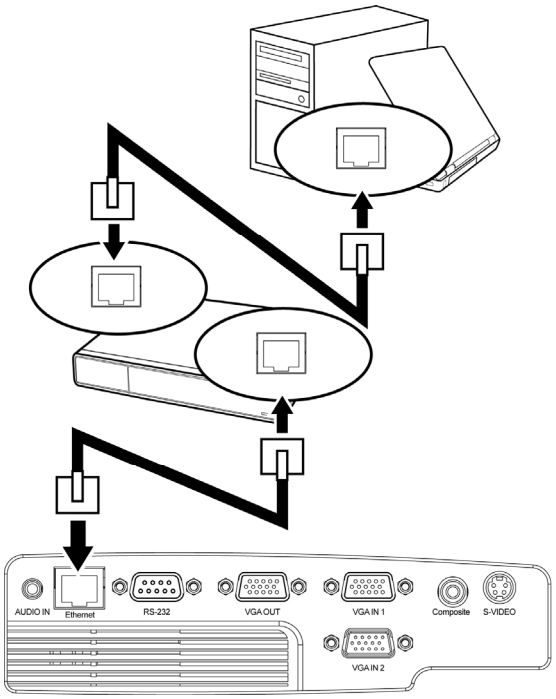

■Note

To monitor and control the projector (including stand-by mode), the following conditions are needed to be ready:

(1) Projector is powered on or in stand-by mode.

(2) Projector is connected to network.

(3) LED light of the projector network port shows normal. (Green light on, Orange twinkling)

(4) Green power mode is “OFF” (See page 21)

Remote Control

Controls and Functions

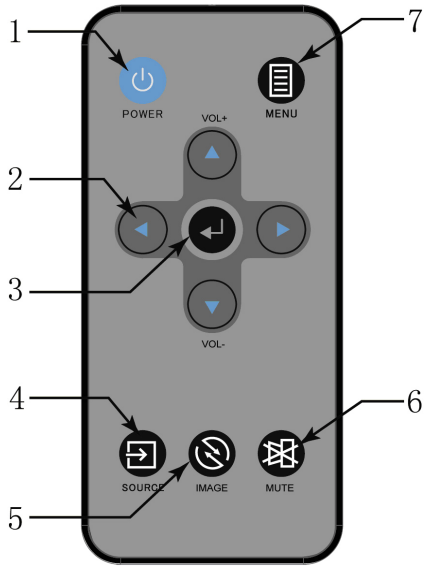

1. **POWER**

   To turn on/off power.

2. **Arrow keys (Left/Right/ Up /Down)**

   To adjust the OSD menu.

3. **Enter**

   To execute the OSD selection

4. **Source**

   To select the input source

5. **Image**

   To adjust the projection mode

6. **Mute**

   To mute the projector sound.

7. **MENU**

   To open or close the OSD menu

Remote Control Effective Range

Infra-Red (IR) remote control sensor is located on the front and rear of the projector. The remote control must be held at an angle within 20 degrees perpendicular to the projector's IR remote control sensor to function correctly. The distance between the remote control and the sensor should be within 5 meters (~ 16 feet).

Ensure there are no obstacles between the remote control and the IR sensor on the projector that might obstruct the infra-red.

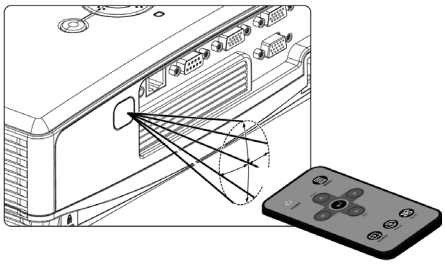

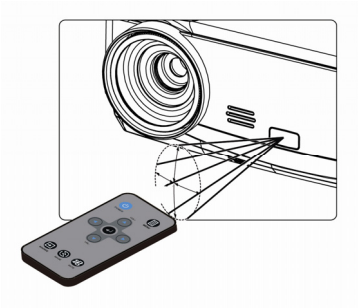

Replacing the Battery

1. Pull out the battery, **Please follow the illustrated instructions. Push and hold the locking arm while pulling out the battery holder.**
2. Insert the new battery in the holder. Note the positive polarity should face outward.
3. Please use Lithium Battery CR2025.

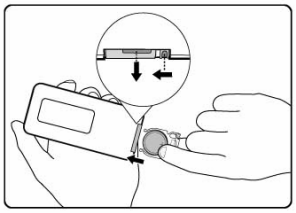

⚠CAUTION

Avoid excessive heat and humidity.

Placing battery with incorrectly process may cause battery damaged.

Replace only with the same or equivalent type of battery recommended by the battery manufacturer.

Dispose of the used battery in accordance with the battery manufacturer's instructions.

Never throw batteries into a fire; it will cause batteries explosion.

If the batteries are dead or if you will not be using the remote control for a long time, remove the batteries to prevent battery acid from leaking into the battery compartment.

Setting Up

Power on the Projector

1. Complete peripheral connections (with a Computer, VCR/DVD, etc.) before turning on the projector

2. Plug the power cord firmly into the projector and into a wall socket. The LED indicator flashes Orange shown in Stand-by mode.

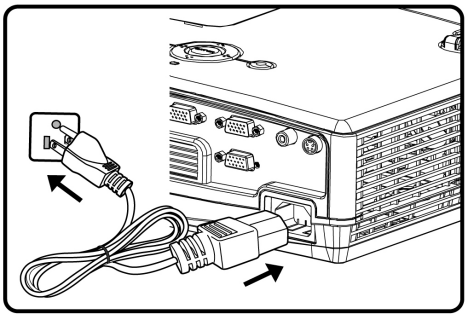

3. Remove the lens cap. If it is closed, it could become deformed due to the heat produced by the projection lamp.

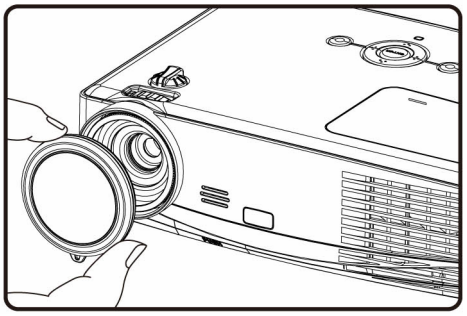

4. Press ON/STAND-BY button on the projector or POWER button on the remote control to start the projector. The preparation display appears on the screen and countdown starts.

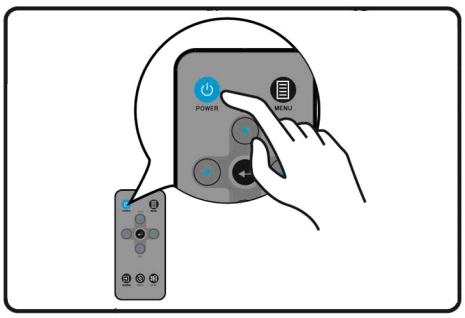

5. After the countdown, the input source appears on the screen.

If the frequency/resolution of the input signal exceeds the projector's operating range, you will see the message 'Out of Range' displayed on a blank screen. Please change to an input signal which is compatible with the projector's resolution or set the input signal to a lower setting.

Power off the Projector

1. Press **ON/STANDY-BY** button on the projector or POWER button on the remote control and the confirmation message for shut-down displays on the screen.
2. Press **ON/STANDY-BY** button on the projector or POWER button on the remote control again to turn off the projector. The LED indicator flashes red and green, and the projection lamp shuts down. After the projector is turned off, the cooling fans operate about 120 seconds. You cannot turn on the projector during this cooling down period.

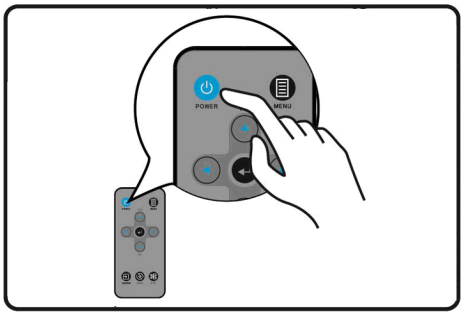

3. When the projector has cooled down enough, the LED indicator lights orange and then you can turn on the projector.

⚠ CAUTION

To protect the lamp, the projector will not respond to any commands during the cooling process. Do not unplug the power cord before the projector shutdown sequence is completed or during the 120-second cooling down process.

If the projector is not properly shut down, to protect the lamp, when you attempt to re-start the projector, the fans will run for a few minutes to cool down. Press POWER again to start the projector after the fans stop and the POWER indicator light steady orange.

Disconnect the power cord from the wall socket if the projector will not be used in an extended period of time.

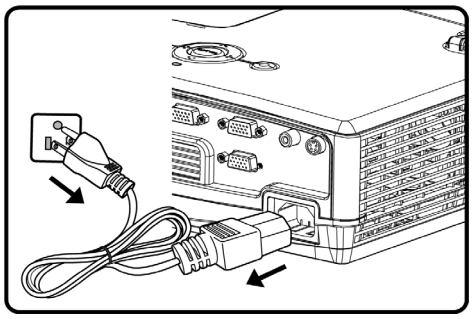

Positioning

The Projector supports the following four different projection methods.

Front Table

Select this location with the projector placed near the floor in front of the screen. This is the most common way to position the projector for quick setup and portability.

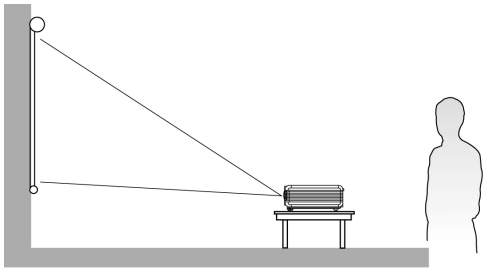

Rear Table

Place the projector in the rear of the screen. This installation is required to have the screen specialized for rear projection. Switch on the projector and selection “System Setup- Basic” in the function menu, and then select “Rear Table” in “Projector Position”

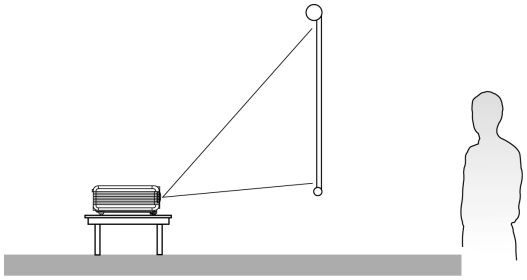

Rear Ceiling

Mount the projector on the ceiling upside down and in the rear of the screen. Switch on the projector and selection “System Setup-Basic” in the function menu, and then select “Rear Ceiling” in “Projector Position”

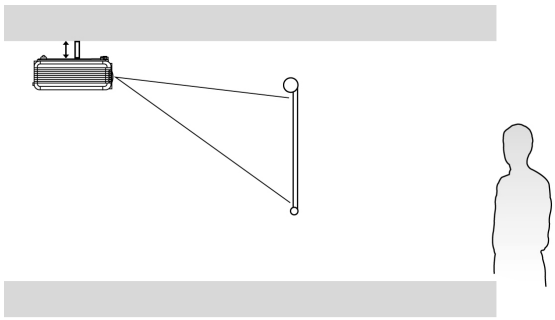

Front Ceiling

Mount the projector on the ceiling upside down and in the front of the screen. Switch on the projector and selection “System Setup-Basic” in the function menu, and then select “Front Ceiling” in “Projector Position”

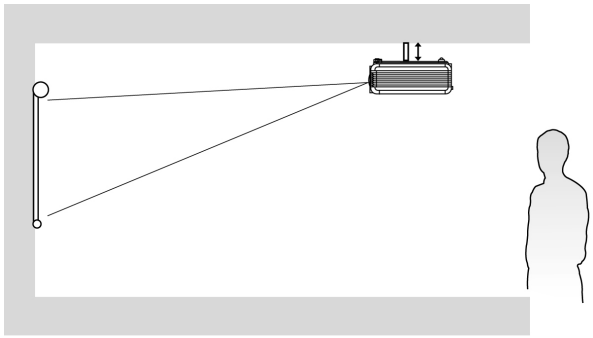

Projection Dimensions

Refer to "Dimensions" on page 37 for the center of lens dimensions of this projector before calculating the appropriate position.

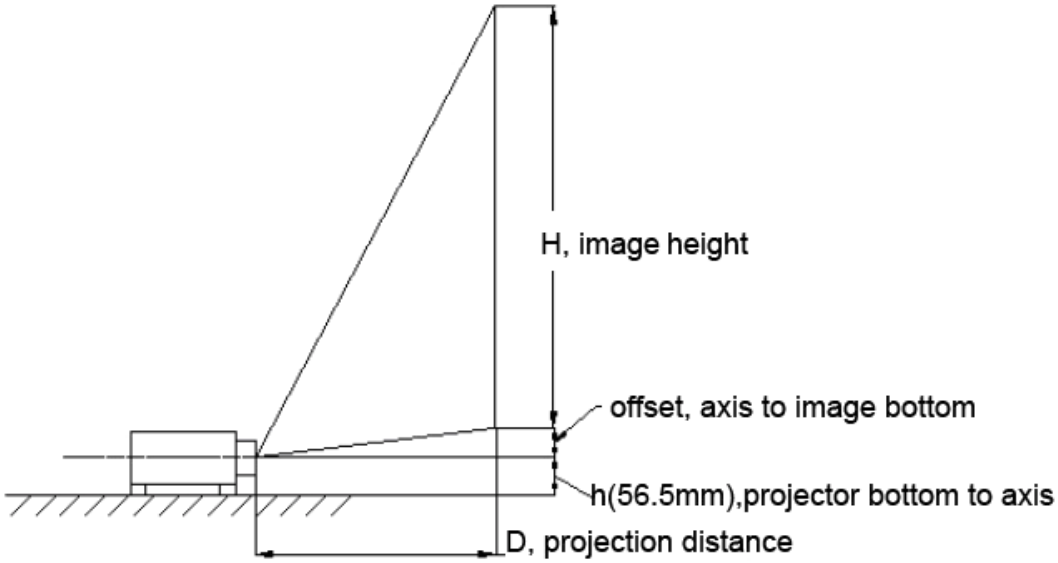

- **4:3 image on a 4:3 screen**

Image Diagonal (inch)	**D**, Projection Distance(mm)	image width(mm)	**H**, image height(mm)	**Offset** 109% (mm)	**Offset** 104% (mm)
35	441	711	533	48	21
45	567	914	686	62	27
77	970	1565	1173	106	47
80	1008	1626	1219	110	49
100	1260	2032	1524	137	61
120	1512	2438	1829	165	73
150	1890	3048	2286	206	91
200	2520	4064	3048	274	122
250	3150	5080	3810	343	152
300	3780	6096	4572	411	183

Projection lens can be moved up and down with the lens shift function.
Above Offset (104~109%) means the adjustable range by using this lens shift function and offset value is assumed image height as 100% and calculated.
This function makes the positioning of images easy to the screen.

- **16:9 image on a 16:9 screen**

Image Diagonal (inch)	**D**, Projection Distance(mm)	image width(mm)	**H**, image height(mm)	**Offset** 109% (mm)	**Offset** 104% (mm)
35	480	775	436	112	90
45	618	996	560	123	95
60	824	1328	747	140	103
77	1057	1705	959	159	111
100	1373	2214	1245	185	122
120	1647	2657	1494	207	132
150	2059	3321	1868	241	147
200	2745	4428	2491	297	172
250	3432	5535	3113	353	197
300	4118	6641	3736	409	222

There is 3% tolerance among these numbers due to optical component variations. If the projector is planned to be permanently installed, physically testing the projection size and distance before installation is recommended; it is greatly helpful for you to determine the exact mounting position and the projector therefore achieve optimal performance.

Menu Operation

The projector is equipped with On-Screen Display (OSD) menus for proceeding various adjustments and settings. Below is the overview of the OSD menu. To use the OSD menus, please set them to your familiar language first.

Menu/ Source

1. Press **MENU** button of the remote control or projector to turn on the OSD.
2. Press ▼ button to select the beneath function for your needs.
3. Press **Enter** Key to confirm the selection
4. Press the Menu button key to leave the Menu.

Features	Selection	Description
Quick Auto Search	ON	Automatically search the next source.
	OFF	Retain the source selected last time.
Main Input	VGA/YCbCr	Select which Input is to be displayed on the projector. (Default is VGA)
	VGA2/YCbCr2	
	Composite Video	
	S-Video	

Menu/ Picture

Shown only when Signal Source is attached

1. Press **MENU** button of remote control or projector to turn on the OSD.
2. Press ▶ button to **Picture** category.
3. Press ▼ button to select the beneath function for your needs.
4. Press the ◀ ▶ button key to adjust the modes or function values
5. Press **Enter** key to confirm the selection
6. Press **MENU** to leave the menu or press ▲ button to back to menu category after Enter key confirming the selection.

Feature	Selection	Description
Picture mode	Dynamic mode	Appropriate for playing colorful movies, video clips.
	Presentation mode	Maximize the brightness of the projected image.
	User mode	Set the different image values, brightness, contrast, color, tint, and sharpness.
Brightness	0~100 (Dark ~ Bright)	Picture mode is “User Mode” only. Adjust the brightness of the image.
Contrast	-50 ~ 50	Picture mode is “User Mode” only. Adjust the contrast of the image.
Color	0 ~ 200	Picture mode is “User Mode” only. Adjust the intensity of the color in the image. VGA have no this function support.
Tint	0 ~10 (Reddish ~ Greenish)	Picture mode is “user Mode” only. Adjust the balance of red to green necessary for realistic representation of Video signals. VGA have no this function support.
Sharpness	0~31	Picture mode is “User Mode” only. Adjust the image to make it look sharper. (At higher values, will switch to detail enhancement)

NOTE: The apparent brightness of the projected image will vary depending on the ambient lighting conditions. Input contrast/brightness signal settings in accordance with projection distance.

Menu/ Display

Shown only when Signal Source is attached

1. Press **MENU** button of remote control or projector to turn on the OSD.
2. Press ▶ button to **Display** category.
3. Press ▼ button to select the beneath function for your needs.
4. Press the ◀ ▶ button key to adjust the function values
5. Press **Enter** key to confirm the selection
6. Press **MENU** button to leave the menu or press ▲ button to back to menu category after Enter key confirming the selection.

Feature	Selection	Description
Aspect Ratio	Auto	Select aspect ratio.
	Native	
	4:3	
	16:9	
Keystone	-20° ~ +20°	Vertical Keystone correction
Horizontal Position	-5 ~ +5	Adjust the horizontal position of the projected image (Only VGA Active) Different source timing obtains the different range, some sources may obtain the narrow range.
Vertical Position	-5 ~ +5	Adjust the vertical position of the projected image (Only VGA Active) Different source timing obtains the different range, some sources may obtain the narrow range.
Phase	0 ~ 31	Adjust the clock phase to reduce image distortion (Only VGA Active)
H Size	-5 ~ +5	Adjust the horizontal width of the image (Only VGA Active)
Digital Zoom	0% ~100%	Digital Zoom is capable to scale part of the input image to a larger size to increase visibility at a distance.

Menu/ System Setup-Basic

1. Press **MENU** button of remote control or projector to turn on the OSD.
2. Press ▶ button to System Setup-Basic category.
3. Press ▼ button to select the beneath function for your needs.
4. Press the ◀ ▶ button key to adjust the modes
5. Press **Enter** key to confirm the selection
6. Press **MENU** button to leave the menu or press ▲ to back to menu category after Enter key confirming the selection.

Feature	Selection	Description
Language	English	Select the Menu Language.
	Japanese	
	Traditional Chinese	
	Simplified Chinese	
	German	
	French	
	Italian	
Projector position	Front Table	Select the projector position.
	Rear Table	
	Rear Ceiling	
	Front Ceiling	
Blank Screen	Black	Select the screen when no input signal is detected.
	Blue	
	Splash screen	
Green Power Mode	ON	Projector can not be turned on and off via using LAN. Standby power is less than 1W.
	OFF	Projector can be turned on and off via using LAN. Standby power is more than 1W.

Menu/ System Setup-Advance

1. Press **MENU** button of remote control or projector to turn on the OSD.
2. Press ▶ button to System Setup-Advance category
3. Press ▼ button to select the beneath function for your needs.
4. Press the ◀ ▶ button key to adjust the modes or values
5. Press **Enter** key to confirm the selection
6. Press **MENU** button to leave the menu or press ▲ button to back to menu category after Enter key confirming the selection.

Feature	Selection	Description
High Altitude Mode	ON OFF	Set the Fan running at full speed. Default is set as OFF.
Volume	0~20	Adjust audio volume. When setting is 0, the sound is muted automatically.
Mute		Mute the audio volume. Press ”Enter” key to Enable / Disable this function.
Menu Position	Center Top - Left Top - Right Bottom - Right Bottom - Left	Select the Menu displays position.
Lamp mode	Bright Normal Eco	Set the lamp mode.
Reset Lamp Timer		After replacing to a new lamp, execute this function to reset lamp timer.
User Reset		“Language” , ”Projector position” and “High altitude mode” will be remained as the mode that user originally set up. The other setting will be reset as factory default.

Menu/ Information

1. Press **MENU** button of remote control or projector to turn on the OSD.
2. Press ▶ button to Information category.
3. Press **MENU** button to leave the menu.

Feature	Description
Active Source	The current input source information.
Picture Mode	The picture mode information.
Resolution	The current source resolution information.
Equivalent lamp hour	The used lamp hours information.
Color system	The color space information.
IP Address	IP address that RJ45 connector of unit linked to intranet.

Use LAN Function (Optional)

The function allows users to remote control the projector through computer system in “Intranet environment”
(This function is optional; it’s available after complete setting).

Operation Instruction

1. Computer system links to intranet port and the projector links to another intranet port through LAN cables.
2. Or use IP Router to connect Computer/ Intranet port/ Projector by LAN cables.
3. Adjust OSD of the unit to Information category to find IP address.

4. Input IP address to connect the computer and projector, then projector can be controlled by the computer.

Network Control for Web

Network Control is provided in visual interface, it can help user to monitor and manage the projector(s) status in the local area network on Web.

Operation Procedure

1. Connect different intranet ports via using LAN cables or link computer and projector through IP router. (Please refer to page 10)
2. Press menu of the projector and select Information Item to find IP address.
3. Enter "Given IP address (For example http://192.168.1.176/)" into the address bar of the web browser and press “Enter” key or click “Go” button.

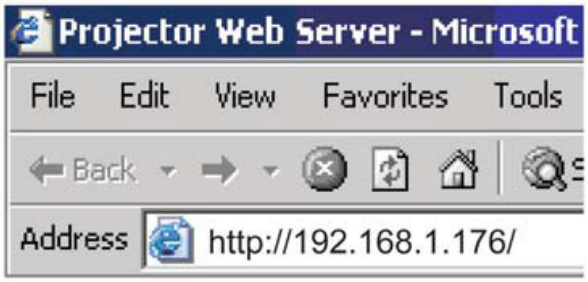

4. Click Function.
5. Enter Home and you can see the welcome page.

6. **Projector Status**

   Check the Projector Status to show current projector status and network configuration settings.

HOME | Projector Status | Projector Control | Network Configuration

Projector Status

Hostname:	ST2K
Template:	0
Fan1 Speed:	0
Fan2 Speed:	0
Projector Firmware Version:	UNKNOWN
PIC Firmware Version:	1.3
Web Pages Version:	0.6
Power State:	off
Lamp Hours:	0
Lamp Mode:	Normal
System Hours:	0
Selected Video:	UnKnown
Volume Level:	0
Network Control:	off
IP Address:	192.168.4.4
Netmask:	255.255.255.0
Gateway:	192.168.4.254
MAC Address:	00.04.a3.01.00.00

7. **Projector Control:**

Select projector's detailed setting from this page.

HOME | Projector Status | Projector Control | Network Configuration

Projector Control

Options

Basic Controls - Control Shutdown, Freeze, Blank Screen, Configure OSD Language, Keystone, Projection Mode, and Magnify

Input Selection - Control Current Video Input Selections

Audio Settings - Configure Audio Settings

Picture Settings - Configure Picture Settings

Other Settings - Auto Shutoff, Lamp Mode, and Fan Mode

8. **Network Configuration.**

Set up IP Settings and Email Notifications from this page.

HOME | Projector Status | Projector Control | Network Configuration

Network Configuration

Options

IP Settings - Configure IP settings that enable network communication

Email Notifications - Configure mail settings to receive a message when a projector error occurs

Maintenance

Care of the Projector

The projector needs maintenance. The only thing that users need to do on a regular basis is to keep the lens clean.

Never remove any parts of the projector except the lamp. Contact your dealer if other parts need to replace.

Cleaning the Lens

Clean the lens whenever you notice dirt or dust on the surface.

Use a canister of compressed air to remove dust.

If there are dirt or smears, use lens-cleaning paper or moisten soft cloth with lens cleaner and gently wipe the lens surface.

⚠ **CAUTION**

Never rub the lens with abrasive materials.

Cleaning the Projector Case

Before cleaning the case, turn the projector off via using the proper shutdown procedure as described in "Power off the projector" on page 14 and unplug the power cord.

To remove dirt or dust, wipe the case with a soft, lint-free cloth.

To remove stubborn dirt or stains, moisten a soft cloth with water and a neutral pH detergent. Then wipe the case.

⚠ **CAUTION**

Never use wax, alcohol, benzene, thinner or other chemical detergents. These can damage the case.

Storing the Projector

If you need to store the projector for an extended time, please follow the instructions below:

Make sure the temperature and humidity of the storage area are within the recommended range for the projector. Please refer to "Specifications" on page 33 or consult your dealer about the range.

Retract the adjuster feet.

Remove the battery from the remote control.

Pack the projector in its original packing or equivalent.

Transporting the Projector

The projector shipped with its original packing or equivalent is recommended.

Lamp Information

Getting to Know the Lamp Hour

When the projector is in operation, the duration (in hours) of lamp usage is automatically calculated by the built-in timer.

To obtain the lamp hour information:

Press **MENU** button and then press ► button to the **Information** category

You will see the **Equivalent lamp hour** information displaying on the menu

To leave the menu, press **MENU** button.

Timing for Replacing the Lamp

When a message appears “Please change the lamp”, please install a new lamp or consult your dealer.

An old lamp may cause a malfunction in the projector and the lamp may explode in some instance.

⚠ **CAUTION**

The Lamp indicator light and Temperature warning light will light up if the lamp becomes too hot. Turn the power off and let the projector cool for 45 minutes. If the Lamp or Temp indicator still lights up after turning the power on, please contact your dealer. See "Indicators" on page 32 for details.

The following lamp warning displays will remind you to change the lamp.

Status	Message
When the projection lamp of the projector reaches its end of life, "Please change the lamp " will be shown every time when the projector is on.	Please change the lamp Please replace the lamp 0

Replacing the Lamp

1. To remove the screws showed as **1** to open the lamp door showed as **A**

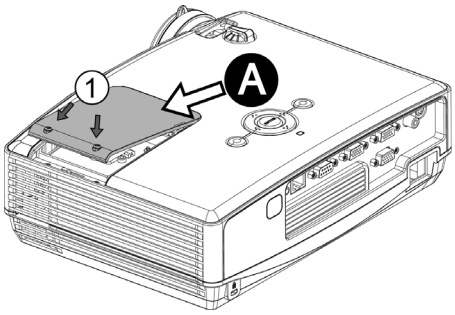

2. To remove the screws showed as **2** then use the handle showed as **B** to draw up the lamp holder

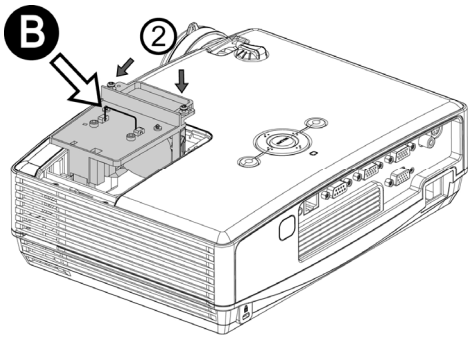

3. To change the new lamp set and use the inverse procedure to reassemble the unit.

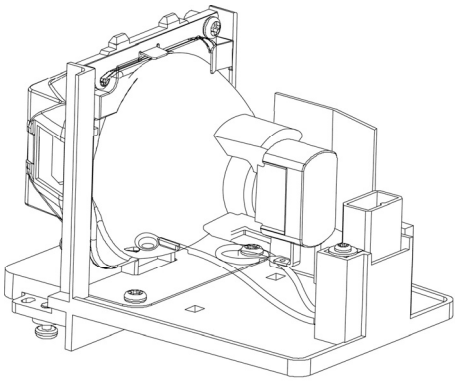

Replace Lamp Part No: 23040028

Contact your dealer for detailed instructions and new lamp preparation.

■ Note

To reduce the risk of injuries to fingers and damage to internal components, use caution when removing lamp glass that has shattered into sharp pieces. Before replacing the lamp, clean the lamp compartment and dispose of cleaning materials. Be careful of sharp edges in the lamp compartment. Wash hands after lamp replacement.

Only manufacturer certified lamps are tested with this projector. Use of other lamps may cause electrical shock and fire.

Turn the power off and disconnect the projector from the wall socket before replace the lamp.

⚠ **WARNING**

Dispose of a lamp in accordance with the local recycling laws.

Do not put it to your trash.

Recycling Lamp's laws of the USA, go to www.lamprecycle.org

Recycling Product's laws of USA, go to www.eiae.org

Recycling Product's laws of Canada, go to www.epsc.ca

For more information about recycling laws, please contact local government agency or dealer.

To reduce the risk of electrical shock, always turn the projector off and disconnect the power cord before changing the lamp.

To reduce the risk of severe burns, allow the projector to cool for at least 45 minutes before replacing the lamp.

To reduce the risk of injuries to fingers and damage to internal components, use caution when removing lamp glass that has shattered into sharp pieces. Before replacing the lamp, clean the lamp compartment and dispose of cleaning materials. Be careful of sharp edges in the lamp compartment. Wash hands after lamp replacement.

Turn the power off and disconnect the projector from the wall socket before replace the lamp. Follow with below instruction.

⚠ **CAUTION** **Do not turn the power on with the lamp cover removed.**

Resetting the Lamp Timer

1. Press **MENU** button of remote control or unit to turn on the OSD.
2. Press ▶ button to System Setup-Advance category
3. Press ▼ button to Reset Lamp Timer
4. Press **Enter** Key to show the "confirm again" page and select **OK** to reset the lamp timer.

⚠ **CAUTION** **Do not reset if the lamp is not new or replaced as this could cause damage.**

Trouble Shooting

No power	Remedy
There is no power from the power cord.	Plug the power cord into the AC inlet on the projector, and plug the power cord into the power outlet.
Attempting to turn the projector on again during the cooling process.	Wait until the cooling down process has completed.

No image/ Image adjustment	Remedy
The video source is not turned on or connected correctly.	Turn the video source on and check that the signal cable is connected correctly.
The projector is not correctly connected to the input signal device.	Check the connection.
The input signal has not been correctly selected.	Select the correct input signal using MENU button on the projector or the SOURCE button on the remote control.
The lens cover is still closed.	Open the lens cover.
The projection lens is not correctly focused.	Adjust the focus of the lens using the focus ring.
The projector and the screen are not aligned properly.	Adjust the projection angle and direction as well as the height of the projector if necessary.
No audio	**The projector is not connected correctly.** Check audio cable if connect correctly.
	The volume is set to minimum. Adjust the volume.
	Mute is turned on. Press the MUTE button.

Remote control	Remedy
The battery is out of power.	Replace the battery with a new one.
There is an obstacle between the remote control and the projector.	Remove the obstacle.
You are too far away from the projector.	Stand within 5 meters of the projector.

LED Indicator

LED status	Condition	Description
Green	Always On	Normal operation
Orange	Always On	Stand by
	Flashing	Powering up
Red	Once every one second	Fan error
	Twice every one second	Thermal error
	Always On	Power error
Green and Orange	Green LED on first, then Orange LED flashing	Download mode
Green and Red	RED and Green LED flashing (interlace) Red (0.5sec) → Green (0.5 sec)	Cooling Mode

Specifications

Projector Specification

☞**All specifications are subject to change without notice.**

General	
Product name	DLP Projector
Optical	
Resolution	1024*768 XGA
Display system	TI 0.55" DMD™ Type X
Lens F/Number	F = 2.6
Lamp	OSRAM 180-230W E20.6
Power Supply	
Input Voltage	100V to 240V with 10% tolerance
Power consumption	Normal operation: less than 300W; Stand By: less 1W
Mechanical	
Dimensions	280.0(W) x 206.0(D) x 85.0(H)
Weight	3kg
Electrical Feature	
Input Ports	- VGA in (D-sub 15 Pins) connector x 2 (Support component (YCbCr) signal) - RJ45 - Composite - AC power inlet - Phone jack - RS232C - S-Video
Output Port	-VGA out (D-sub 15 Pins)
Environmental Requirements	
Operating temperature	5°C–35°C
Operating relative humidity	10-80% RH(Without condensation)
Operating altitude	(0-2000 m) above sea level

Configurations of Terminal

Analog VGA Input/Output

(1) Support Component Signal

(2) Connections (15P HD-Sub)

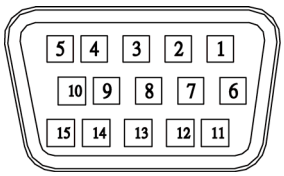

(3) Pin Number Define

Pin NO.	Signal Name	Connection
1	R signal / Cr	R / Cr
2	G signal / Y	G / Y (Sync. On G)
3	B signal / Cb	B / Cb
4	N.C.	N.C.
5	GND	GND
6	R return(GND)	GND
7	G return(GND)	GND
8	B return(GND)	GND
9	N.C.	N.C.
10	N.C.	GND
11	Signal return(GND)	N.C.
12	DDC data	DDC/SDA
13	HSYNC/TTL/Comp.sync	H
14	VSYNC	V
15	DDC clock	DDC/SCL

(4) Connector

- 15P HD-Sub

(5) Input signal polarity

- Video signal (RGB): Positive
- Sync: Positive, Negative

(6) Input level

- Signal: 0.7V ±0.2V p-p 75Ω terminate, NRZ
- Sync: TTL

(7) Composite Sync.

- TTL:Negative

RS232C Control

(1) Communication Protocol

Items	Specification
Standard Baud rate	9600 bps
Data length	8 bits
Parity	None
Stop bit	1 bit
Flow Control	None

(2) Connections

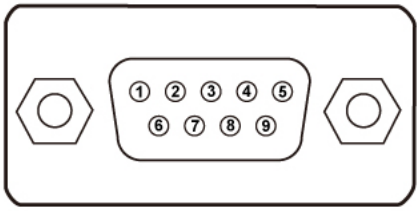

(3) Pin Number Define

1	No Connect	6	No Connect
2	RXD	7	RTS
3	TXD	8	CTS
4	No Connect	9	No Connect
5	SG		

(3) RS232C Cable Define

PC Side	Projector side with D-Sub Pin
RX 2	RX 2
TX 3	TX 3
GND 5	GND 5

S-Video Signal

(1) S-Video Connections and Connector

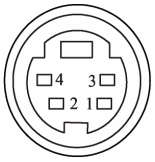

(2) Pin Number Define

Pin NO.	Signal Name	Connection
1	Y Signal(GND)	GND
2	C Signal(GND)	GND
3	Y Signal Input	Y
4	C Signal Input	C

(3) Input signal polarity

- Composite signal sync: Negative

(4) Input level

- Y Signal: 1.0V ±0.2V p-p 75Ω terminate, NRZ
- Sync: 0.286V ±0.1V p-p
- Chromatic: 75Ω terminate, NRZ
- Burst: 0.286V ±20%

LAN Connector

(1) Connections

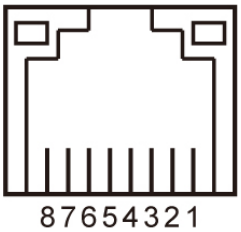

(2) Pin Number Define

1	TX +	6	No Connect
2	TX -	7	RX -
3	RX +	8	No Connect
4	No Connect	9	No Connect

Dimension

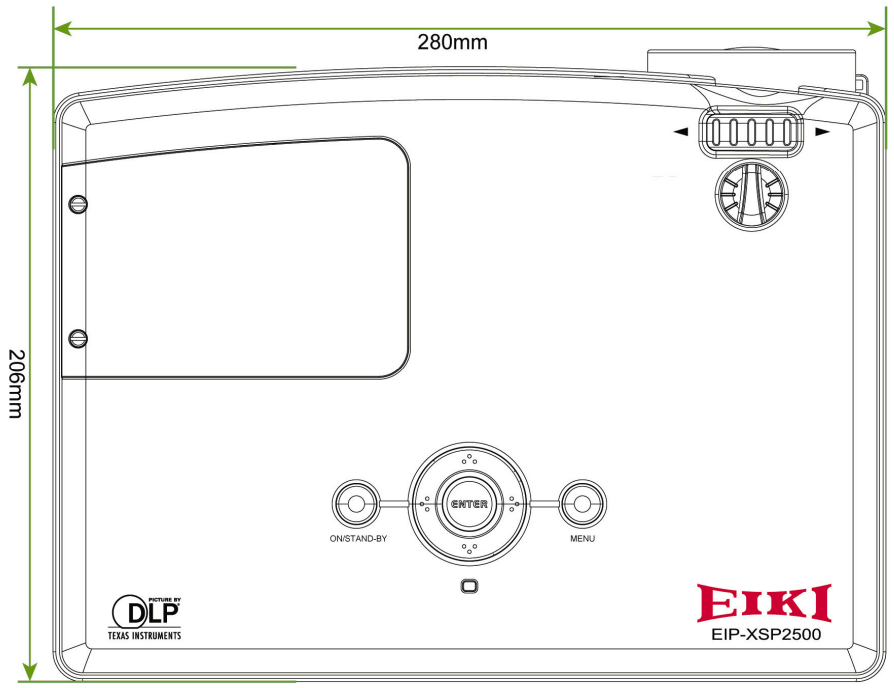
280mm
206mm
ENTER
ON/STAND-BY
MENU
DLP
TEXAS INSTRUMENTS
EIKI
EIP-XSP2500

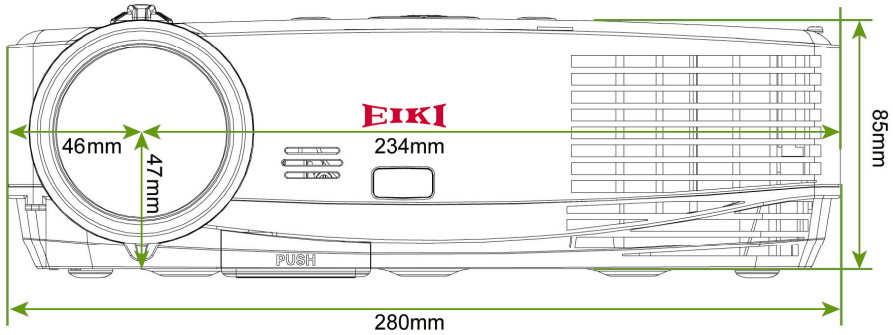
EIKI
46mm
47mm
234mm
85mm
PUSH
280mm

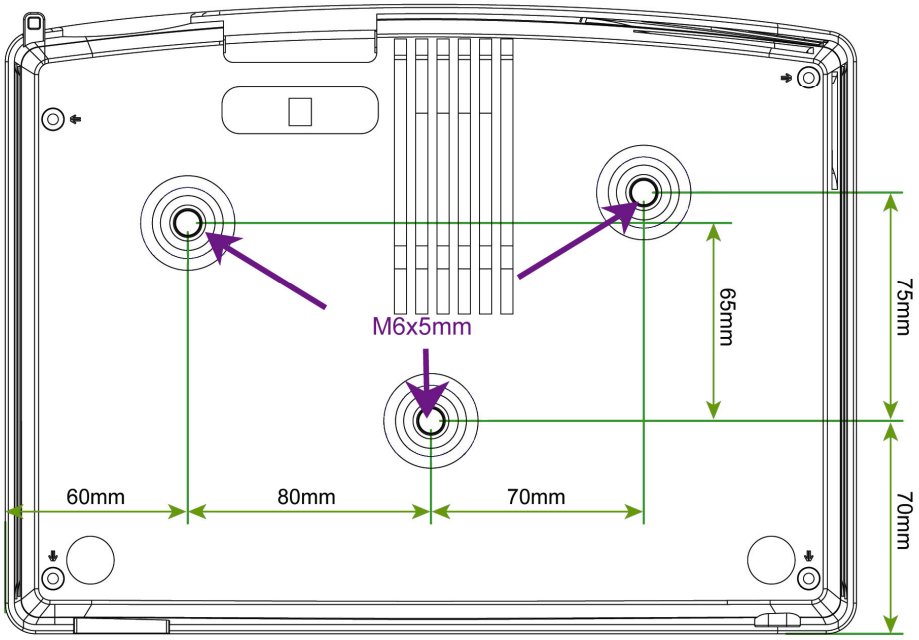
M6x5mm
65mm
75mm
70mm
60mm
80mm
70mm

Timing Chart

Mode	Resolution	V(Hz)
VGA	640x480	60/70/72/75/85
VGA	720x400	60/70/85
SVGA	800x600	56/60/70/72/75/85
XGA	1024x768	60/70/72/75/85
SXGA	1152x864	60
SXGA	1152x882	60
SXGA	1280x1024	60
WXGA	1280x768	60
WXGA	1280x800	60/75
Quad VGA	1280x960	60/75
MAC 19	1024x768	75
MAC	1024x768	60.24
Video / S-Video Source		
SECAM		50.8
PAL50		50.8
NTSC		60.5
NTSC-M		60.5
Componet Sources		
480i (525i)		59.94
480p(525p)		59.94
576i(625i)		50
576p(625p)		50
720p(750p)		60
720p(750p)		50
1080i(1125i)*		30
1080i(1125i)*		25
*Half Sampling Only Processing 540 lines		

EIKI

U.S.A.

EIKI International, Inc.
30251 Esperanza
Rancho Santa Margarita
CA 92688-2132
U.S.A.
Tel: 800-242-3454 (949)-457-0200
Fax: 800-457-3454 (949)-457-7878
E-Mail: usa@eiki.com

Canada

EIKI CANADA - Eiki International, Inc.
P.O. Box 156, 310 First St. - Unit 2,
Midland, ON, L4R 4K8, Canada
Tel: 800-563-3454 (705)-527-4084
Fax: 800-567-4069 (705)-527-4087
E-Mail: canada@eiki.com

Deutschland & Österreich

EIKI Deutschland GmbH
Am Frauwald 12
65510 Idstein
Deutschland
Tel: +49-6126-9371-0
Fax: +49-6126-9371-14
E-Mail: info@eiki.de

Eastern Europe

EIKI CZECH SPOL. s.r.o.
Nad Cementárnou 1163/4a
Paraha 4, Podolí
147 00
Czech Republic
Tel: +420 241 410 928
+420 241 403 095
Fax: +420 241 409 435
E-Mail: easterneurope@eiki.de

China

EIKI (Shanghai) Co., Ltd.
LAKESIDE OASIS MIDDLE RING
BUSINESS CENTRE
Block 10, #16-07,
1628, Jin Sha Jiang Road
Shanghai, 200333
CHINA
Tel: 86-21-3251-3993
Service Hot line: 86-21-3251-3995
Fax: 86-21-3251-3997
E-mail: info@eiki-china.com

South East Asia

EIKI Industrial (M) Sdn Bhd
No. 3A-2C, 4th Floor, Jalan PJU 8/3A,
Perdana Business Centre,
Bandar Damansara Perdana,
47820 Petaling Jaya, Selangor
Malaysia
Tel: +603-7722-4362
Fax: +603-7722-4392
E-Mail: sales@eiki.my

Japan & Worldwide

EIKI Industrial Company Limited.
4-12 Banzai-Cho, Kita-Ku, Osaka,
530-0028 Japan
Tel: +81-6-6311-9479
Fax: +81-6-6311-8486

WorldWide Website http://www.eiki.com