USA's primary source for projector lamps
myprojectorlamps

PROJECTOR OWNER'S MANUAL

EIKI

EIP-S200

Need a replacement lamp for this projector?

www.myprojectorlamps.com

Original manufacturer manual, provided unmodified as a courtesy of MyProjectorLamps.com.
All trademarks belong to their respective owners.

EIKI

MULTIMEDIA PROJECTOR

MODEL **EIP-S200**

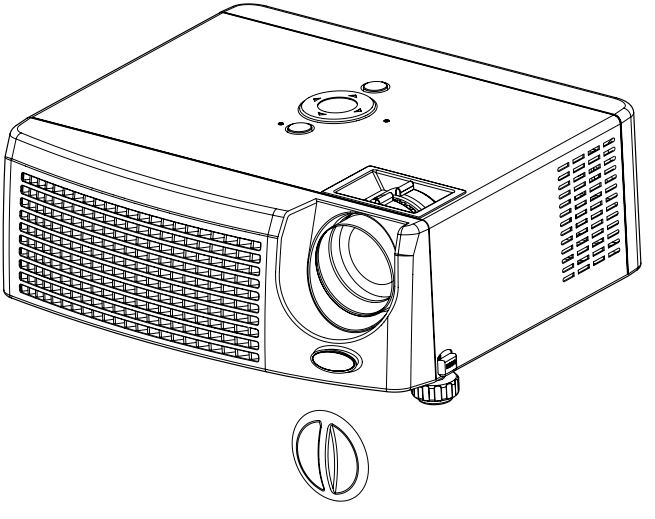

OWNER'S MANUAL

Federal Communication Commission Notice

Note : This equipment has been tested and found to comply with the limits for a Class B digital device, pursuant to part 15 of the FCC Rules.

These limits are designed to provide reasonable protection against harmful interference in a residential installation. This equipment generates, uses and can radiate radio frequency energy and, if not installed and used in accordance with the instructions, may cause harmful interference to radio communications. However, there is no guarantee that interference will not occur in a particular installation. If this equipment does cause harmful interference to radio or television reception, which can be determined by turning the equipment off and on, the user is encouraged to try to correct the interference by one or more of the following measures :

- Reorient or relocate the receiving antenna.
- Increase the separation between the equipment and receiver.
- Connect the equipment into an outlet on a circuit different from that to which the receiver is connected.
- Consult the dealer or an experienced radio/TV technician for help.

Use of shielded cable is required to comply with class B limits in Subpart B of Part 15 of FCC Rules.

Do not make any changes or modifications to the equipment unless otherwise specified in the instructions. If such changes or modifications should be made, you could be required to stop operation of the equipment.

Model Number : EIP-S200
Trade Name : EIKI
Responsible party : EIKI International, Inc.
Address : 30251 Esperanza Rancho Santa Margarita CA 92688-2132
Telephone No. : 800-242-3454 (949-457-0200)

Safety Instructions

Read all of these instructions before you operate your projector and save for future reference.

CAUTION

RISK OF ELECTRIC SHOCK
DO NOT OPEN

CAUTION : TO REDUCE THE RISK OF ELECTRIC SHOCK, DO NOT REMOVE COVER (OR BACK). NO USER-SERVICEABLE PARTS INSIDE EXCEPT LAMP REPLACEMENT. REFER SERVICING TO QUALIFIED SERVICE PERSONNEL.

THIS SYMBOL INDICATES THAT DANGEROUS VOLTAGE CONSTITUTING A RISK OF ELECTRIC SHOCK IS PRESENT WITHIN THIS UNIT.

THIS SYMBOL INDICATES THAT THERE ARE IMPORTANT OPERATING AND MAINTENANCE INSTRUCTIONS IN THE OWNER'S MANUAL WITH THIS UNIT.

Allowing the proper amount of space on the top, sides, and rear of the projector cabinet is critical for proper air circulation and cooling of the unit. The dimension shown here indicate the minimum space required. If the projector is to be built into a compartment or similarly enclosed, these minimum distances must be maintained.

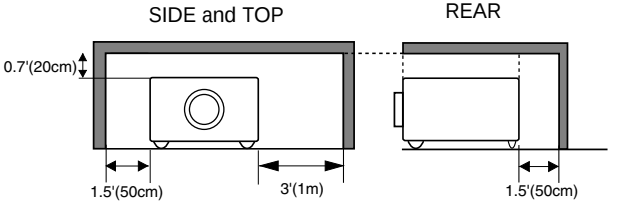

An appliance and cart combination should be moved with care. Quick stops, excessive force, and uneven surfaces may cause the appliance and cart combination to overturn.

1. Check that the operating voltage of your unit is identical with the voltage of your local power supply.

2. Should any liquid or solid object fall into the cabinet, unplug the unit and have it checked by the qualified personnel before operating it further.

3. Do not attempt to service this product yourself, as opening or removing covers may damage the components inside and will void your warranty.

4. Do not place this product on an unstable cart, stand, or table. The product may fall, causing serious damage to the product.

5. Unplug the unit from the wall socket if it is not to be used for several days. To disconnect the cord, pull it out by the plug. Never pull the cord itself.

6. The wall socket should be near the unit and easily accessible.

7. Do not place the projector where the cord can be stepped on as this may result in fraying or damage to the lead or the plug. Be alert to tripping hazards.

8. Never look into the projector lens when the lamp is switched on as the bright light can damage your eyes. Never let children look into the lens when it is on.

9. Do not place your hand or objects near the ventilation holes. The air coming out is hot.

10. Never open any covers on the projector except the lamp cover. Dangerous electrical voltages inside the projector can cause severe injury. Except as specifically directed in this User's Manual, do not attempt to service this product yourself. Refer all servicing to qualified service personnel.

11. Unplug the projector from the wall socket before cleaning. Use a damp cloth for cleaning the projector housing. Do not use liquid or aerosol cleaners.

12. Keep the plastic packing materials (from the projector, accessories and optional parts) out of the reach of children as these bags may result in death by suffocation. Be particularly careful around the small children.

13. For ventilation reasons, the fan continues to operate after the projector has been powered off. Please do not unplug the power cord until the fan stops.

14. The projector is equipped with ventilation holes (intake) and ventilation holes (exhaust). Do not block or place anything near these slots, or internal heat build-up may occur, causing picture degradation or damage to the projector.

15. When you replace the projector lamp, never touch the new bulb with your bare hands. The invisible residue left by the oil on your hands may shorten the bulb life. Use lint-free gloves or finger cots are recommended.

16. The product should be situated away from heat sources such as radiators, heat registers, stoves, or other products (including amplifiers) that produce heat.

17. Do not overload wall outlets, extension cords, or integral convenience receptacles as this can result in a risk of fire or electric shock.

NOTE: *This symbol mark and recycle system are applied only to EU countries and not applied to the countries in the other area of the world.*

Your EIKI product is designed and manufactured with high quality materials and components which can be recycled and reused.

This symbol means that electrical and electronic equipment, at their end-of-life, should be disposed of separately from your household waste.

Please dispose of this equipment at your local community waste collection/recycling centre.
In the European Union there are separate collection systems for used electrical and electronic products.

Please help us to conserve the environment we live in!

Voor de klanten in Nederland

Bij dit produkt zijn batterijen geleverd.
Wanneer deze leeg zijn, moet u ze niet weggooien maar inleveren als KCA.

NL

Notes on AC Power Cord

AC Power Cord must meet requirement of country where you use a projector. Confirm an AC plug type with graphics below and proper AC Power Cord must be used. If supplied AC Power Cord does not match your AC outlet, contact your sales dealer. This projector is equipped with a grounding type AC line plug. Make sure that your outlet fits the plug. Do not defeat the safety purpose of this grounding type plug. We highly recommend using a video source device also equipped with a grounding type AC line plug to prevent from signal interference due to voltage fluctuation.

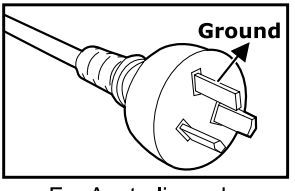

For Australia and Mainland China

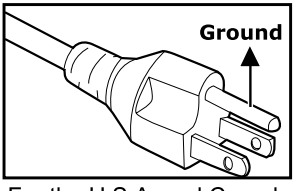

For the U.S.A. and Canada

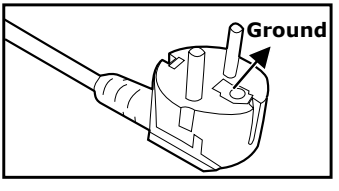

For Continental Europe

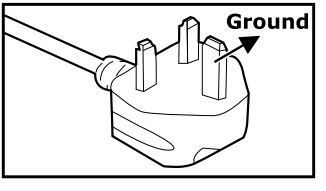

For the U.K.

CONTENTS

Introduction **7**
Projector Features 7
Package Contents 8
Projector Overview 9

Using the Product **11**
Control Panel 11
Terminals 12
Remote Control 13
Remote Control Operation 15

Installation **16**
Connecting the Projector 16
Powering On/Off the Projector 17
Adjusting the Projected Image 18

Menu Operation **21**
Image (Computer / Video Mode) 23
Video (Video Mode) 24
Display (Computer Mode) 24
Language (Computer / Video Mode) 25
Advanced (Computer / Video Mode) 25
Audio (Computer / Video Mode) 25

Maintenance **26**
Cleaning the Lens 26
Cleaning the Projector Housing 26
Replacing the Lamp 27

Specifications **29**

Appendix **30**
LED Indicator Messages 30
Compatibility Modes 31
Troubleshooting 32
Configurations of Terminals 33

Introduction

Projector Features

The projector integrates high-performance optical engine projection and a user-friendly design to deliver high reliability and ease of use.

The projector offers the following features:

- Single chip 0.55" Texas Instruments DLP® technology
- SVGA (800 x 600 pixels) true resolution
- 1.07x manual zoom lens
- Auto image re-sizing (Auto-Sync.) to 800 x 600 full screen with scaling compression compatibility for VGA, SVGA, XGA* and SXGA*
- Compatibility with Macintosh® computers
- Compatibility with NTSC, PAL, SECAM, and HDTV
- Multi-function remote control
- D-Sub 15-pin terminal for analog video connectivity
- User-friendly, multi-language on-screen display (OSD)
- Advanced electronic keystone correction

NOTE

** means compressed.*

Package Contents

When you unpack the projector, make sure you have all these components:

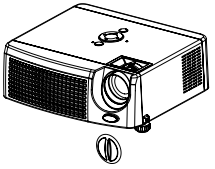

Projector with Lens Cap

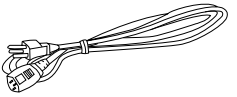

AC Power Cord

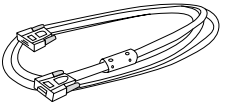

VGA Cable (D-Sub to D-Sub)

Composite Video Cable

S-Video Cable

Audio Cable

Remote Control (IR) with Lithium battery

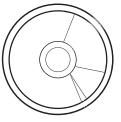

Owner's Manual

Quick Start Guide

Projector Carrying Case

NOTE

- *Save the original shipping carton and packing material; they will come in handy if you ever to ship your unit. For maximum protection, repack your unit as it was originally packed at the factory.*

Projector Overview

Front View

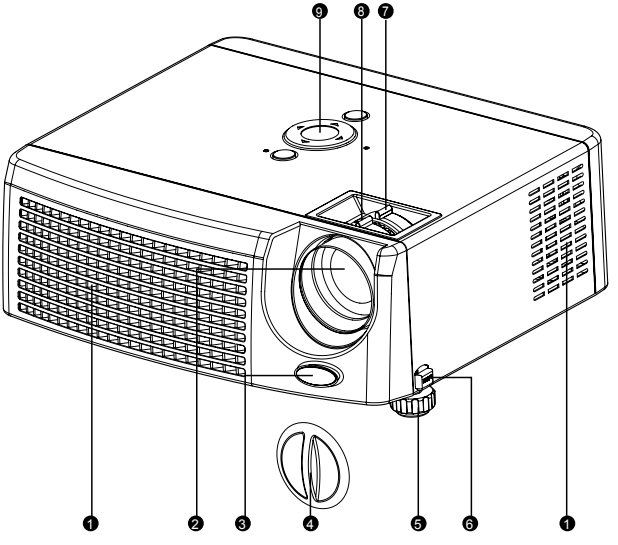

❶ Ventilation holes
❷ Projection lens
❸ Front IR remote control sensor
❹ Lens cap
❺ Elevator foot
❻ Elevator button
❼ Zoom ring
❽ Focus ring
❾ Control panel

Rear View

1. Rear IR remote control sensor
2. Ventilation holes
3. Terminals
4. Elevator button
5. Elevator foot
6. Speaker
7. AC power socket
8. Kensington lock

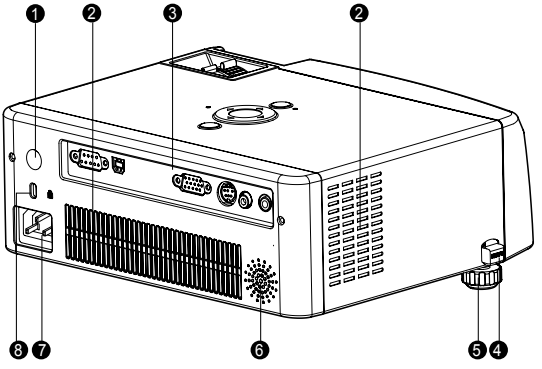

Bottom View

1. Lamp cover
2. Ceiling mount

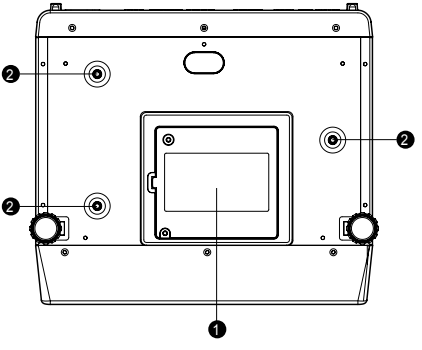

NOTE

- *This projector can be used with a ceiling mount for support. The ceiling mount is not included in the package.*

Using the Product

Control Panel

LED

❶ Lamp LED indicator
Refer to “LED Indicator Messages”. (p.30)

❷ Power LED indicator
Refer to “LED Indicator Messages”. (p.30)

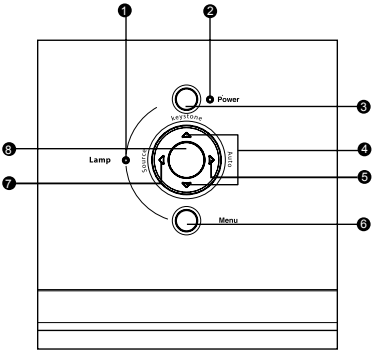

Button Function

❸ **Power**
Refer to “Powering On/Off the Projector”.

❹ **Keystone ▲/▼**
Adjusts image distortion caused by tilting the projector.

❺ **Auto ▶**
Automatically adjusts frequency, total dots. This function is available for computer mode only.

❻ **Menu**
Displays or exits the on-screen display menus.

❼ **Source ◀**
Manually selects an input source.

❽ **Four directional buttons**
Use four directional buttons to select items or make adjustments to your selection.

Terminals

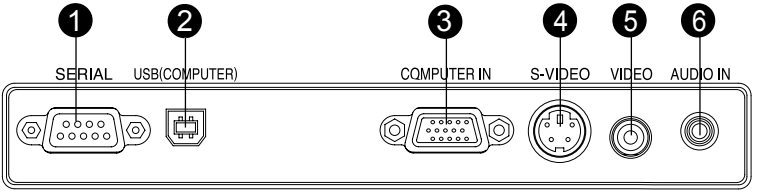

❶ **SERIAL**
When operating the projector via a computer, connect this to the controlling computer's RS-232C port.

❷ **USB(COMPUTER)**
This connector is for firmware update.

❸ **COMPUTER IN**
Connects image input signal (analog) to this jack.

❹ **S-VIDEO**
Connects S-Video output from video equipment to this jack.

❺ **VIDEO**
Connects composite video output from video equipment to this jack.

❻ **AUDIO IN**
Connects an audio output from video equipment to this jack.

Remote Control

❶ **Power**
Refer to “Powering On/Off the Projector”. (p. 17)

❷ **Four directional buttons**
Use four directional buttons to select items or make adjustments to your selection. (p. 22)

❸ **Menu**
Displays or exits the on-screen display menus. (p. 22)

❹ **Enter**
To select the desired setting. (p. 25)

❺ **Keystone ▲/▼**
Adjusts image distortion caused by tilting the projector. (p. 11, 23)

❻ **Volume ▲/▼**
Press the Volume ▲ button to increase the volume; press the Volume ▼ button to reduce the volume. (p. 25)

❼ **Source**
Manually selects an input source. (p. 11, 17, 25)

❽ **Mute**
Cuts off the sound temporarily. Press again to cancel the Mute function. (p. 25)

❾ **Blank**
Cuts off the screen temporarily. Press again to cancel the Blank function. (p. 23, 32)

❿ **4:3/16:9**
Press the 4:3/16:9 to switch the image aspect ratio from 4:3 to 16:9.

⓫ **Auto**
Automatically adjusts frequency, total dots. This function is available for computer mode only. (p. 11, 24, 32)

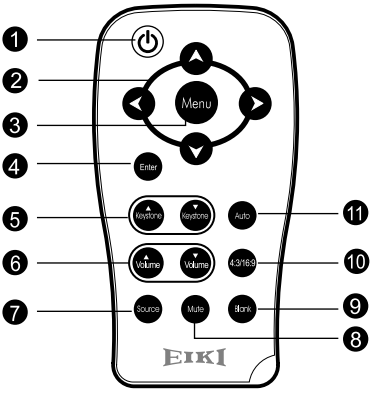

For the first time use:

Remove the transparent insulation tape by pulling it before use.

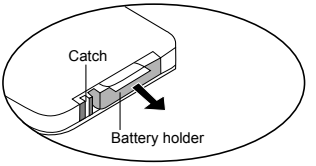

For battery change:

1. Push the catch to the right and remove the battery holder.

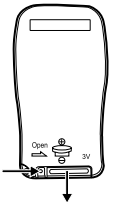

2. Remove the old Lithium coin cell and install new one (CR2025). Ensure that the side with the mark “+” is up.

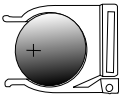

3. Push the battery holder back into the remote control until you feel a click.

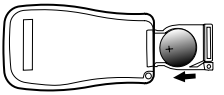

NOTE

- *Keep the battery out of the reach of children. There is a danger of death by accidentally swallowing the battery.*
- *Do not recharge the used battery or expose the battery to fire or water.*
- *Do not dispose of the used battery along with household waste. Dispose of used batteries according to local regulations.*
- *Danger of explosion may happen if a battery is incorrectly replaced. Replace only with the same type recommended by the manufacturer.*

Notes on Lithium Battery (CALIFORNIA USA ONLY)

This product uses a Lithium Battery which contains Perchlorate Material - special handling may apply.
See www.dtsc.ca.gov/hazardouswaste/perchlorate

Remote Control Operation

Point the remote control at the infrared remote sensor and press a button.

■ **Operating the projector from the front**

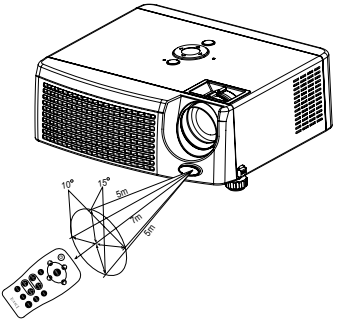

■ Operating the projector from the rear

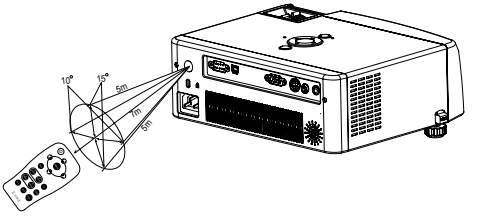

- *The remote control may not operate when there is sunlight or other strong light such as a fluorescent lamp shining on the remote sensor.*
- *Operate the remote control from a position where the remote sensor is visible.*
- *Do not drop the remote control or jolt it.*
- *Keep the remote control out of locations with excessively high temperature or humidity.*
- *Do not get water on the remote control or place wet objects on it.*
- *Do not disassemble the remote control.*

Installation

Connecting the Projector

❶ RS232 Cable
❷ USB Cable
❸ VGA Cable (D-Sub to D-Sub)
❹ Audio Cable
❺ Composite Video Cable
❻ S-Video Cable
❼ VGA (D-Sub) to HDTV (RCA) Cable

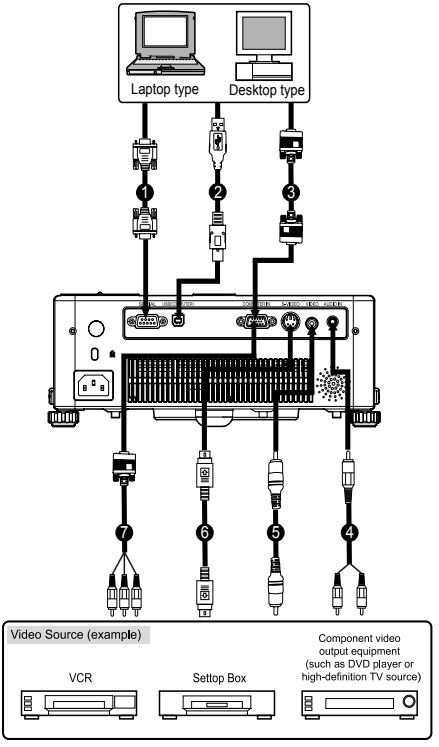

NOTE

- *When connecting cable, power cords of both a projector and external equipment should be disconnected from AC outlet.*
- *The figure above is a sample connection. This does not mean that all of these devices can or must be connected simultaneously.*
- *The cables that come with the projector may differ from the above illustration. The included cables are based on actual shipment delivery.*

Powering On/Off the Projector

Powering on the projector:

1. Remove the projector lens cap.
2. Complete the AC power cord and peripheral signal cable(s) connections.
3. The Power LED blinks Green in standby mode.
4. Press ⏻ button on the control panel or remote control to turn on the projector. The Power LED lights on Amber and Lamp LED lights on Green when the lamp is on.
5. Turn on your source (computer, notebook, DVD, etc.). The projector automatically detects your source.
   - When searching message appears on the screen, ensure that the appropriate signal cable(s) are securely connected.
   - The signal message will appear on the screen when the source is detected.
   - If you are connecting multiple sources to the projector simultaneously, press **Source** button.

Warning:
- Remove the lens cap first before powering on.
- Never look into the lens when the lamp is on. This can damage your eyes. It is especially important that children are not allowed to look into the lens.

Powering Off the Projector:

1. Press ⏻ button on the control panel or remote control. “Power Off? Press Power again” message will appear on the screen.
2. Press ⏻ button again to turn off the projector.
3. The cooling fans continue to operate for cooling cycle and the Power LED lights on Amber and Lamp LED blinks Green. When the Power LED begins flashing (Lamp LED lights off), the projector has entered standby mode.
   If you wish to turn the projector back on, you must wait until the projector has completed the cooling cycle and has entered standby mode.
   Once in standby mode, simply press ⏻ button to restart the projector.
4. Disconnect the power cord from the electrical outlet and the projector.
5. Do not turn on the projector immediately following a power off procedure.

NOTE

- *Please wait until the fan motor and the Lamp LED turn off before removing the AC power cord from the projector.*

Adjusting the Projected Image

Adjusting the Projector Height

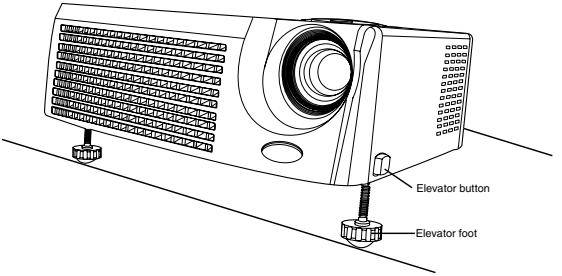

The projector is equipped with an elevator foot to adjust the image height.

To raise the image:
1. Press the elevator button.
2. Raise the image to the desired height angle, then release the button to lock the elevator foot into position.

To lower the image:
1. Press the elevator button.
2. Lower the image, then release the button to lock the elevator foot into position.

NOTE

- *To avoid damaging the projector, make sure that the elevator foot is fully retracted before placing the projector in its carrying case.*

Adjusting the Projector Zoom and Focus

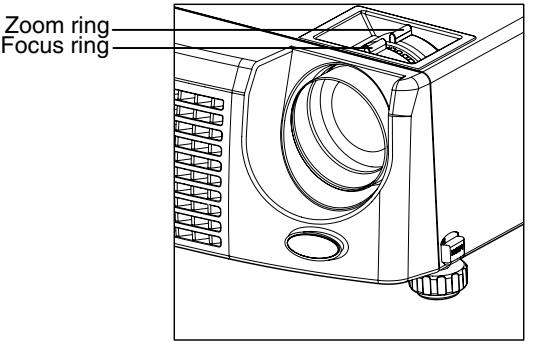

1. Focus the image by rotating the focus ring. A still image is recommended for focusing.
2. Adjust the image by rotating the zoom ring. Rotate to the right to reduce the image. Rotate to the left to enlarge the image.

Adjusting Projection Image Size

Refer to the graphic and table below to determine the screen size and projection distance. The values shown below are approximate and may vary from actual size.

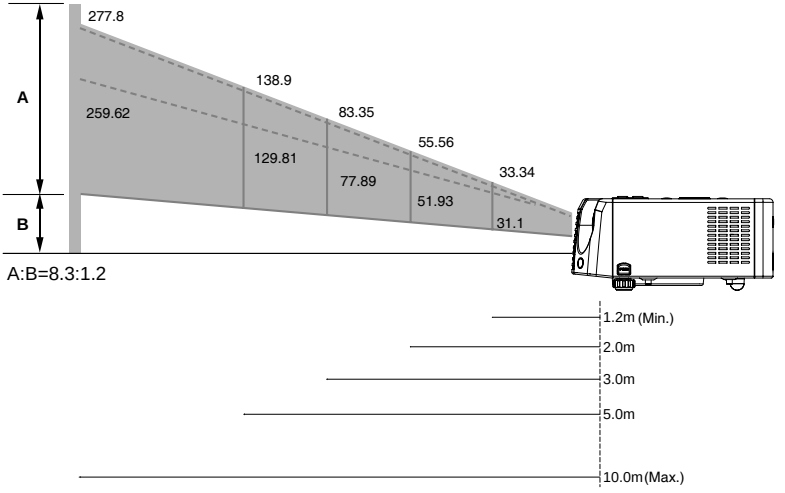

PROJECTION DISTANCE (METER)		1.2	2.0	3.0	5.0	10.0
4:3 SCREEN SIZE-DIAGONAL (INCH)	Wide	33.34	55.56	83.35	138.9	277.8
	Tele	31.1	51.93	77.89	129.81	259.62

NOTE

- *Position the projector in a horizontal position; other positions can cause heat build-up and damage to the projector.*
- *Make sure the heat ventilation holes are not blocked.*
- *Do not use the projector in a smoky environment. Smoke residue may cause buildup on critical parts.*

Menu Operation

The projector has multilingual On Screen Display menus that allow you to make image adjustments and change a variety of settings.

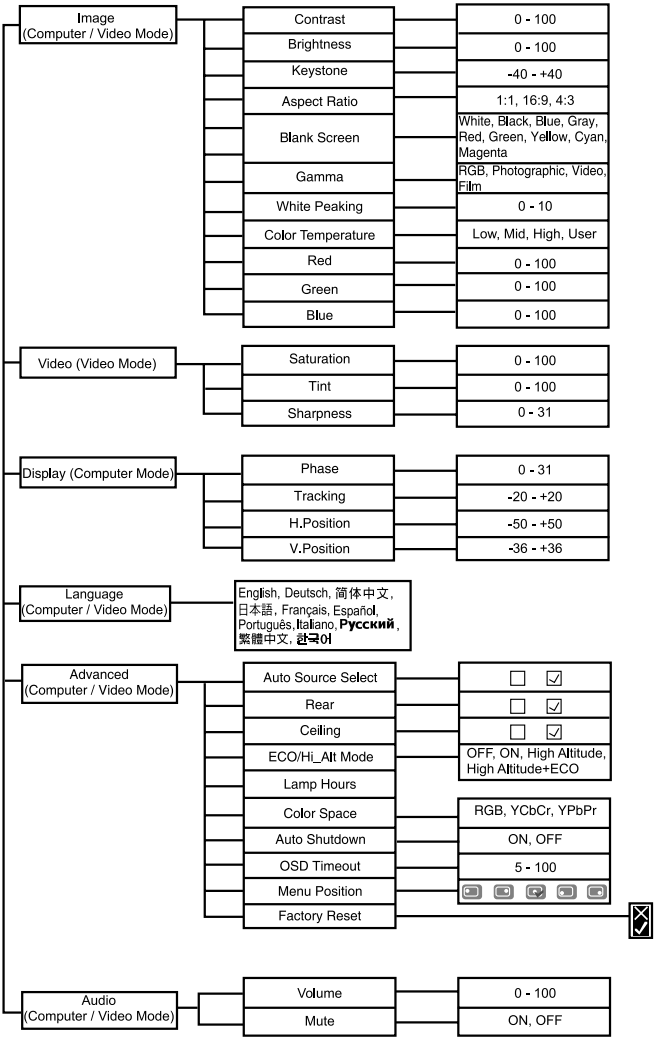

How to operate

1. Press **Menu** button to open the OSD menu.
2. When OSD is displayed, use ◀ / ▶ buttons to select any feature in the main menu. After selecting the desired main menu feature, press ▼ button to enter sub-menu for feature setting.
3. Adjust the settings with ◀ / ▶ buttons.
4. To return to the main menu, press **Menu** button.
5. To exit OSD, press **Menu** button. The OSD menu will close and the projector will automatically save the new settings.

Image (Computer / Video Mode)

Contrast

The contrast controls the degree of difference between the lightest and darkest parts of the picture. Adjusting the contrast changes the amount of black and white in the image.

- Press ◀ to decrease the contrast.
- Press ▶ to increase the contrast.

Brightness

Adjusts brightness of the image.

- Press ◀ to darken the image.
- Press ▶ to lighten the image.

Keystone

Adjusts image distortion caused by tilting the projector.

Aspect Ratio

Use this function to choose your desired image size.

- 1 :1: Keep the image with original width-height ratio and maximize the image to fit native horizontal or vertical pixels.
- 16:9: The input source will be scaled to fit the width of the screen.
- 4:3: The input source will be scaled to fit the projection screen.

Blank Screen

Blanks the screen temporarily, and selects the screen color when this function is active.

- Black / Blue / Gray / Red / Green / Yellow / Cyan / Magenta / White

Gamma

Selects Gamma mode.

- RGB: Computer text mode
- Photographic: Computer photo mode
- Video: Common video mode
- Film: Dark video image mode

White Peaking

The white peaking control adjusts the white peaking level of the DMD chip. 0 stands for minimal segment, and 10 stands for maximum segment. If you prefer a stronger image, adjust towards the maximum setting. For a smooth and more natural image, adjust towards the minimum setting.

Color Temperature

Adjusts color temperature. At higher temperature, the screen looks colder; at lower temperature, the screen looks warmer. If you select “User”, “Red”, “Green” and “Blue” can be adjusted.

Red

Manually adjusts red.

Green

Manually adjusts green.

Blue

Manually adjusts blue.

Video (Video Mode)

Saturation

Adjusts a video image from black and white to fully saturated color.

- Press ◀ to decrease the amount of color in the image.
- Press ▶ to increase the amount of color in the image.

Tint

Adjusts the color balance of red and green.

- Press ◀ to increase the amount of green in the image.
- Press ▶ to increase the amount of red in the image.

Sharpness

Adjusts the sharpness of the image.

- Press ◀ to decrease the image.
- Press ▶ to increase the image.

Display (Computer Mode)

Phase

“Phase” synchronizes the signal timing of the display with that of the graphic card. If you experience an unstable or flickering image, use the phase function to correct it.

Tracking

“Tracking” changes the display data frequency to match the frequency of your computer graphic card. If you experience a vertical flickering bar, use the tracking function to make an adjustment.

H.Position (Horizontal Position)

- Press ◀ to move the image left.
- Press ▶ to move the image right.

V.Position (Vertical Position)

- Press ◀ to move the image down.
- Press ▶ to move the image up.

Language (Computer / Video Mode)

Choose the multilingual OSD menu. Use ▲ / ▼ to select your preferred language. Press "◀ / ▶ / **Enter**" to finalize the selection.

Advanced (Computer / Video Mode)

Auto Source Select
Automatically scans the input source. Press "◀ / ▶ / **Enter**" to confirm or cancel the selection.

Rear
The image is reversed horizontally. Press "◀ / ▶ / **Enter**" to confirm or cancel the selection.

Ceiling
The image is inverted vertically. Press "◀ / ▶ / **Enter**" to confirm or cancel the selection.

ECO/Hi_Alt Mode
Use this function to dim the projector lamp light output which will lower power consumption and increase lamp life, or/and turning on High Altitude mode operates the fans at full speed continuously to allow for proper high altitude cooling of the projector.

Lamp Hours
Displays Hour the lamp's elapsed operating time (in hours).

Color Space
Manually selects signal type.

- RGB
- YCbCr
- YPbPr

Auto Shutdown
Uses this function to automatically turn off the lamp if the projector does not detect an input signal for specified time period (30 minutes).

OSD Timeout
Duration OSD menu stays active (at idle state by second).

Menu Position
Choose the menu position on the display screen.

Factory Reset
Press "◀ / ▶ / **Enter**" to enter its menu. Use ▲ / ▼ to choose "☑" and press "◀ / ▶ / **Enter**" to return the display parameters on all menus to the factory default settings.

Audio (Computer / Video Mode)

Volume

- Press ◀ to decrease the volume.
- Press ▶ to increase the volume.

Mute

- Choose "ON" to turn mute on.
- Choose "OFF" to turn mute off.

Maintenance

The projector needs proper maintenance. You should keep the lens clean as dust, dirt or spots will project on the screen and diminish image quality. If any other parts need replacing, contact your dealer or qualified service personnel. When cleaning any part of the projector, always switch off and unplug the projector first.

Warning:
Never open any of the covers on the projector. Dangerous electrical voltages inside the projector can cause severe injury. Do not attempt to service this product yourself. Refer all servicing to qualified service personnel.

Cleaning the Lens

Gently wipe the lens with lens cleaning paper. Do not touch the lens with your hands or fingers.

Cleaning the Projector Housing

Gently wipe with a soft cloth. If dirt and stains are not easily removed, use a soft cloth damped with water, or water and neutral detergent, and wipe dry with a soft, dry cloth.

NOTE

- *Turn off the projector and remove the AC power cord from the power outlet before beginning maintenance work.*
- *Make sure the lens is cool before cleaning.*
- *Do not use detergents or chemicals other than those noted above. Do not use benzene or thinners.*
- *Do not use chemical sprays.*
- *Use a soft cloth or lens paper only.*

Replacing the Lamp

Projector lamps have a finite life. Replace the lamp when:

- The image becomes darker and hues become weaker after a lamp has been for a long period of time.
- The projector lamp LED indicator turns into amber. Refer to section titled **"LED Indicator Messages"** (p.30) for further details.

NOTE

- *The lamp becomes high temperature after turning off the projector with the power button. If you touch the lamp, you may scald your finger. When you replace the lamp, wait for at least 45 minutes for the lamp to cool down.*
- *Do not touch the lamp glass at any time. The lamp may explode due to improper handling, including the touching of the lamp glass.*
- *Lamp lifetime may differ from lamp to lamp and according to the environment of use. There is no guarantee of the same lifetime for each lamp. Some lamps may fail or terminate their lifetime in a shorter period of time than other similar lamps.*
- *A lamp may explode as a result of vibration, shock or degradation as a result of hours of use as its lifetime draws to an end. Risk of explosion may differ according to the environment or conditions in which the projector and lamp are being used.*
- *Faster on-off-cycles will damage the lamp and reduce lamp life. Wait at least for 5 minutes to turn off the projector after powering on.*
- *Do not operate the lamp in proximity to paper, cloth, or other combustible material nor cover it with such materials. Otherwise it could cause a fire.*
- *Do not operate the lamp in an atmosphere containing an inflammable substance, such as thinner. Otherwise it could cause a fire or explosion.*
- *Thoroughly ventilate the area or the room when operating the lamp in an oxygen atmosphere (in the air). If ozone is inhaled, it could cause headaches, nausea, dizziness, etc.*
- *The inorganic mercury is involved in the lamp. If the lamp bursts, the mercury inside the lamp will go out of the projector. Leave the area immediately if the lamp shatters while being operated and ventilate the area for at least 30 minutes in order to avoid the inhalation of mercury fumes. Otherwise it could be harmful to user's health.*

1. Turn off the projector and unplug the AC power cord.
   Allow the projector to cool for at least 45 minutes.
2. Place a protective sheet (cloth) beneath the projector. Turn the projector over so you can access the lamp cover.
3. Loosen the screws on the lamp cover and open it.
4. Loosen the screws on the bottom of the lamp assembly.
5. Grasp the lamp handle and pull the lamp assembly directly out of the projector.
6. Replace with the new lamp.
7. Tighten the screws on the bottom of lamp assembly.
8. Tighten the screws on the lamp cover.

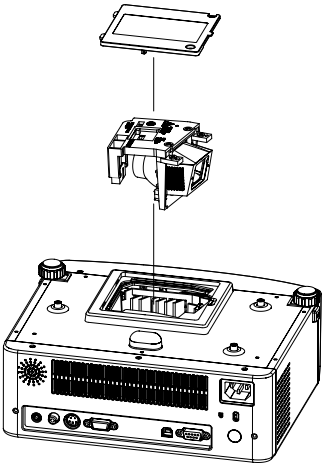

NOTE

- *Dispose of the used lamp according to local regulations.*
- *Ensure that screws are tightened properly. Screws not tightened fully may result in injury or accidents.*
- *Since the lamp is made of glass, do not drop the unit and do not scratch the glass.*
- *Do not reuse the old lamp. This could cause the lamp to explode.*
- *Be sure to turn off the projector and unplug the AC power cord before replacing the lamp.*
- *Do not use the projector with the lamp cover removed.*

ORDER REPLACEMENT LAMP

Replacement lamp can be ordered through your dealer. When ordering a projection lamp, give the following information to the dealer.

Model No. of your projector : EIP-S200
Replacement Lamp No. : P8384-1014

Specifications

Display Type	Single 0.55" DLP panel
Resolution (Pixels)	800 x 600
Uniformity	85%
Lens	Manual Zoom (1.07x) F=2.46mm f=19 .91- 21.36mm
Contrast Ratio	2000 : 1
Aspect Ratio	4:3 (Default) , 16:9
Screen Size	31.1" - 277.8"
Throw Distance	1.2m - 10m
Lamp	200W
Projection Type	Front, Rear, Ceiling
Video Compatibility	NTSC4.43 PAL-60, PAL-M,N,(B,D,G,H,I) SECAM
Input Source	D-Sub 15 pin, S-Video, Composite Video, Stereo Phone Jack, RS232, USB
Scanning Frequency Horizontal Frequency Vertical Frequency	 31 - 79 KHz 50 - 85 Hz
Digital Keystone Correction	Vertical + / - 15°
Integrated Speaker	1 x 2W
Acoustic Noise	36dBA
Storage Temperature	-20 - + 60°C
Operation Temperature	+5 - + 35°C
Operation Humidity	35% - 85% maximum (No Condensation)
Power Requirement	AC 100 – 240V, 50 / 60 Hz
Power Consumption	250W Standby mode: less than 5W
Dimension (W x D x H)	255.5 x 223 x 101.5mm
Weight	3.0kg (6.6lb)

Note: Design and Specifications are subject to change without prior notice.

Appendix

LED Indicator Messages

Projector Status	LED Type				Meaning
	Power LED		Lamp LED		
	Color	Status	Color	Status	
Standby	Green	Flashing	Off	-	The projector is powered and ready.
Lamp ignition failure	Amber	Solid	Off	-	The projector system has some problems with its fan, so the projector cannot start up.
Power on	Amber	Solid	Green	Solid	The projector is operating normally.
Lamp life warning	Amber	Solid	Amber	Solid	The lamp has reached its end of life and must be changed soon. The lamp will continue to operate until it fails. Change the lamp. If the lamp is off, then the ballast will become malfunction.
Power off	Amber	Solid	Green	Flashing	The projector is shutting down. The fan motor is cooling the lamp for shutdown. Do not unplug the power cord or turn the power switch off before the lamp LED turns off. The fan motor will turn off when the lamp has cooled.
Over temperature	Amber	Solid	Amber	Flashing	Temperature is too high. The lamp will turn off.

Compatibility Modes

Computer:

Mode	Resolution	fH (kHz)	fV (Hz)	Timing
480P	640 x 480	31.46	59.9	60Hz
VGA	640 x 480	37.86	72.8	60Hz
VGA	640 x 480	37.5	75.0	75Hz
VGA	640 x 480	43.2	85.0	85Hz
VGA	720 x 400	31.5	70.0	60Hz
VGA	720 x 400	37.9	85.0	85Hz
SVGA	800 x 600	35.1	56.2	56Hz
SVGA	800 x 600	37.8	60.3	60Hz
SVGA	800 x 600	48.0	72.1	72Hz
SVGA	800 x 600	46.8	75.0	75Hz
XGA	1024 x 768	48.3	60.0	60Hz
XGA	1024 x 768	56.4	70.0	70Hz
XGA	1024 x 768	60.0	75.0	75Hz
XGA	1024 x 768	68.8	84.9	85Hz
Mac16”	832 x 624	49.7	74.5	60Hz
SXGA	1280 x 1024	63.98	60.0	60Hz
SXGA	1280 x 1024	79.9	75.0	75Hz
720P	1280 x 720	45.0	60.0	60Hz
XGA	1024 x 768	48.3	60.0	60Hz
XGA	1024 x 768	60.2	75.0	60Hz
SXGA	1152 x 870	68.6	75.0	75Hz
SXGA	1152 x 864	67.5	75.0	75Hz
Mac 480-66A	640 x 480	35.0	66.7	66Hz

Video:

Signals	Horizontal Frequency (kHz)	Vertical Frequency (Hz)
480p	31.5 kHz	60 Hz
720p	45.0 kHz	60 Hz
1080i	33.7 kHz	30 Hz

Troubleshooting

Refer to the symptoms and measures listed below before sending the projector for repairs. If the problem persists, contact your dealer or service center. Please refer to “LED Indicator Messages” (p.30) as well.

Symptom	Cause	Solution
No power.	The AC power cord is not plugged in.	Plug in the AC power card.
	The AC power cord is not connected to the projector.	Connect the AC power cord to the projector correctly.
	The lamp cover is loose.	Tighten the screws on the lamp cover.
Power goes out during use.	The temperature is too high.	Unplug the AC power cord and wait for a short while, then turn the power back on.
	The ventilation holes are blocked.	Place the projector so that the ventilation holes are not blocked.
No image appears on screen.	The projector is not turned on.	Turn the projector on.
	The connections setup is not correctly.	Check that all connections are setup correctly.
	The connected devices are not functioning properly.	Check that all connected devices are functioning properly.
	Lens cap is not removed.	Remove the lens cap and turn the projector on.
	“Blank” function is activated.	Cancel “Blank” function.
Partial, scrolling or incorrectly displayed image.	The input signal is not supported by the projector.	Press remote control’s “Auto” button.
Image is unstable or flickering.	The signal timing of the display does not synchronize with the graphic card.	Use “Phase” to correct it. Refer to Display section.
		Change the monitor color setting from your computer.
Image has vertical flickering bar.	The display data frequency does not match the frequency of your computer’s graphic card.	Use “Tracking” to make an adjustment. Refer to Display section.
		Check and reconfigure the display mode of your graphic card to make it compatible with the product.
Image is out of focus.	The lens focus is not adjusted optimally.	Adjust the focus with the focus ring.
	The projection distance is not within the projector’s supported range.	Place the projector within the supported range.

Symptom	Cause	Solution
Remote control doesn't work.	The battery could be weak.	Replace with a new battery.
	The remote control is not being used within the effective range.	Use the remote control within the effective range.
	There are some obstructions between the remote control and projector.	Check that there are not obstructions between the remote control and projector.
	There are some fluorescent or other bright lights shining at the projector's infrared remote sensor.	Check that there are not any fluorescent or other bright lights shining at the projector's infrared remote sensor.

Configurations of Terminals

COMPUTER INPUT/COMPONENT INPUT TERMINAL (ANALOG)

Terminal : Analog RGB (Mini D-sub 15 pin)

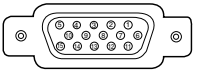

1	Red (R/Cr) Input / Output	**9**	5V
2	Green (G/Y) Input / Output	**10**	DSUB_PLUG
3	Blue (B/Cb) Input / Output	**11**	-----
4	-----	**12**	DDC data
5	Ground (Horiz.sync.)	**13**	Horiz. sync. Input/Output (Composite H/V sync.)
6	Ground (Red)	**14**	Vert. sync.
7	Ground (Green)	**15**	DDC clock
8	Ground (Blue)		

SERVICE PORT CONNECTOR

Terminal : D-sub 9-pin

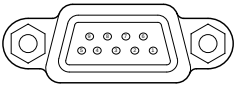

	Serial
1	---
2	RX1A
3	TX1
4	---
5	GND
6	---
7	---
8	---
9	---

U.S.A.
EIKI International, Inc.
30251 Esperanza
Rancho Santa Margarita
CA 92688-2132
U.S.A.
Tel : 800-242-3454 (949)-457-0200
Fax : 800-457-3454 (949)-457-7878
E-Mail : usa@eiki.com

Canada
EIKI CANADA -Eiki International, Inc.
P.O. Box 156, 310 First St. - Unit 2,
Midland, ON, L4R 4K8, Canada
Tel : 800-563-3454 (705)-527-4084
Fax : 800-567-4069 (705)-527-4087
E-Mail : canada@eiki.com

Deutschland & Österreich
EIKI Deutschland GmbH
Am Frauwald 12
65510 Idstein
Deutschland
Tel : 06126-9371-0
Fax : 06126-9371-14
E-Mail : info@eiki.de

Eastern Europe
EIKI CZECH spol. s.r.o.
Umelecka 15
170 00 Praha 7
Czech Republic
Tel : +42 02 20570024 +42 02 20571413
Fax : +42 02 20571411
E-Mail : easterneurope@eiki.de

China
EIKI (Shanghai) Co.,LTD
1. Dapu Road, Golden Magnolia Plaza
#2109 Shanghai,
200023 China
Tel : 86-21-5396-0088
Fax : 86-21-5396-031
E-Mail : info@eikichina.com.cn

Japan & Worldwide
EIKI Industrial Company Limited.
4-12 Banzai-Cho, Kita-Ku, Osaka,
530-0028 Japan
Tel : +81-6-6311-9479
Fax : +81-6-6311-8486

WorldWide Website http://www.eiki.com

© 03/2007 Eiki International, Inc.