USA's primary source for projector lamps
myprojectorlamps

PROJECTOR OWNER'S MANUAL

Eiki

EIP-1

Need a replacement lamp for this projector?

www.myprojectorlamps.com

Original manufacturer manual, provided unmodified as a courtesy of MyProjectorLamps.com.
All trademarks belong to their respective owners.

EIKI

MULTIMEDIA PROJECTOR

MODEL EIP-1

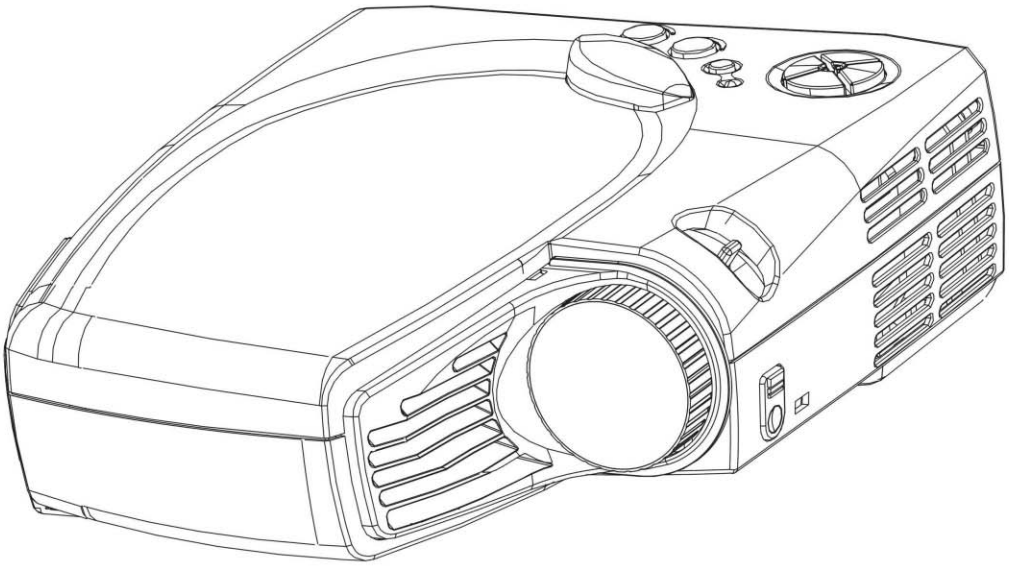

OWNER'S INSTRUCTION MANUAL

Table of Contents

1. Safety Instructions 2
2. The Projector 3
2.1 Features *3*
2.2 Accessories *4*
2.3 Appearance *5*
3. Setting up the Projector 6
3.1 How to connect the projector *6*
3.2 Turning on/off the projector *8*
3.3 Adjusting the altitude of projected images *9*
3.4 Adjusting the focus and zoom *10*
3.5 Projected image size *11*
4. How to use the Projector 12
4.1 Initial image adjustment *12*
4.2 Control panel and remote controller *12*
5. Menu 16
5.1 Image (VGA mode) *16*
5.2 Image (Video mode) *17*
5.3 Display (VGA mode) *18*
5.4 Display (Video mode) *20*
5.5 Audio *22*
5.6 Management *23*
5.7 Language *24*
6. Maintenance 25
6.1 Replacing the lamp *25*
6.2 Cleaning lens *25*
7. Appendix 26
7.1 Common problems & trouble-shooting *26*
7.2 Specifications *28*

1. Safety instructions

Before you use the projector, please read this manual thoroughly and comply with the safety instructions hereunder. Improper use may cause fire, electric shock, injuries, or reduce the life of your projector.

Warning: Please ensure the projector is grounded properly by connecting the power cord to a grounded AC outlet. Do not defect the safety purpose of the grounding type plug.

Warning: Do not cover the lens while the lamp lights.

Warning: To protect your eyes, please do not look at the projector's light source.

Warning: To replace the lamp, please turn off and unplug the projector first; then wait for 1 hour before replacing the lamp. Please refer to page 25 "Replacing the lamp" for the operation procedure.

Warning: Please use the power cord that comes with your projector. Please use the grounded jack for safety.

Warning: Please do not block the openings around the projector for safety.

Warning: Do not place any drinks on top of the projector. The projector can be damaged if wet.

Warning: Do not place the projector in excessively warm or humid areas. Please avoid direct sunshine.

Warning: To avoid electric shock, please do not dismantle the projector by yourself if it is not working.

Warning: To prevent your projector from dropping, please be careful when you move or carry it.

2. The projector

2.1 Features

- With the modularized structure of the product, all you need is the main body when conducting a presentation, thereby making your job easier.
- XGA model can receive signals with resolution up to 1280x1024. To ensure the output quality, please adjust the setup of your computer display card to be less than or equal to 1280 x 1024.
- Compact size, only 3.5 lbs.
- Incorporated **TI** single chip 0.7” DLP™ technology.
- Users may replace 150W (VIP R150/E20) lamp easily.
- Compatible with Mac / IBM PC 98.
- Compatible with NTSC/NTSC4.43/PAL/PAL-M/PAL-N/HDTV.
- Compatible with most interfaces comprising YCbCr, YPbPr, S-Video, Composite Video/Audio.
- Fully functional remote controller, can be used as a mouse
- DVI connector can be connected to digital or standard image signals.
- Soft carrying case

2.2 Accessories

Please check if following accessories are in the box. If any items are missing, please contact your dealer immediately.

Projector with lens cap

Power cord

M1DA-VGA+USB cable

Video/Audio cable

PC Audio in/out cable

S-video cable

VGA cable

USB mouse cable

Remote controller w/

AAA battery x 2

Soft Carrying Case

2.3 Appearance

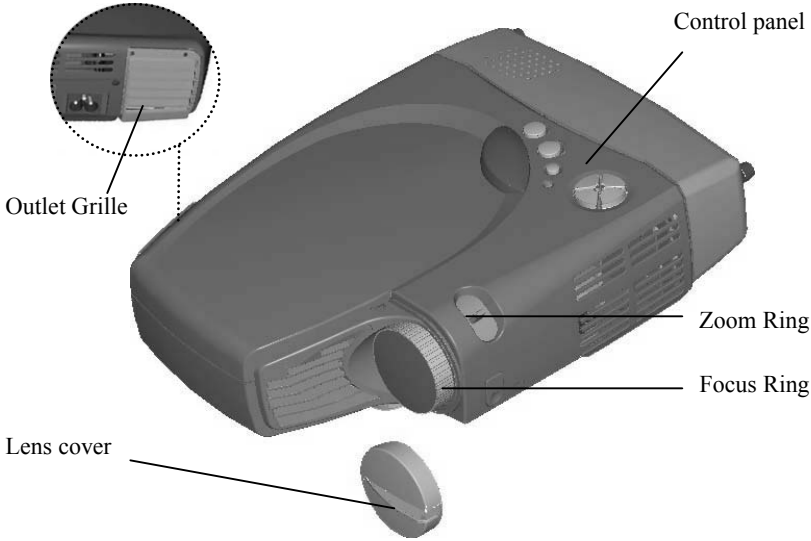

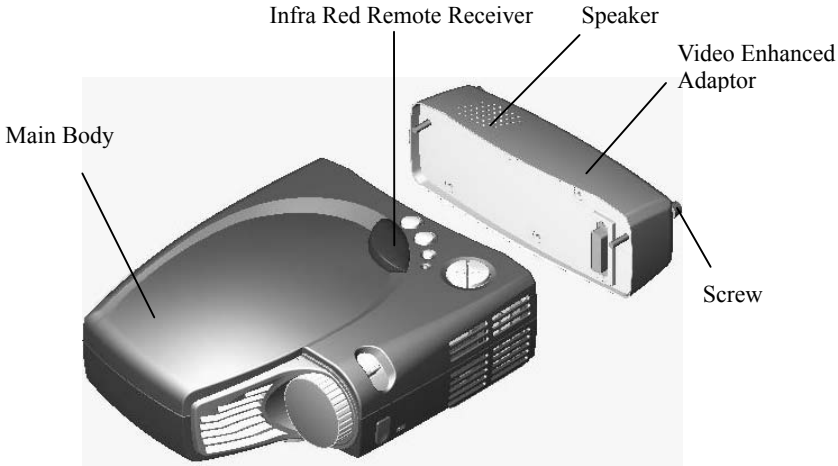

Warning Do keep the flow out of Outlet Grille free.

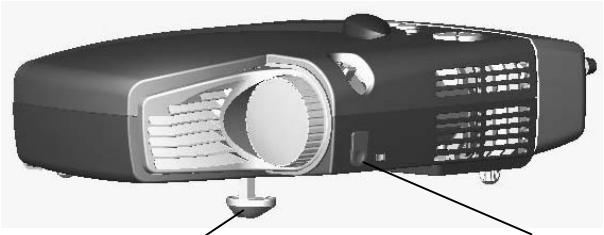

3. Setting up the projector

3.1 How to connect the projector

Depending on your purpose, you can select any of the following connection methods.

1) For displaying data only

Find the M1DA-VGA+USB cable; connect M1DA connector to the main body; and connect VGA and USB connectors to the computer. Then you can start presentation. Under such circumstance, video and audio function won't be available.

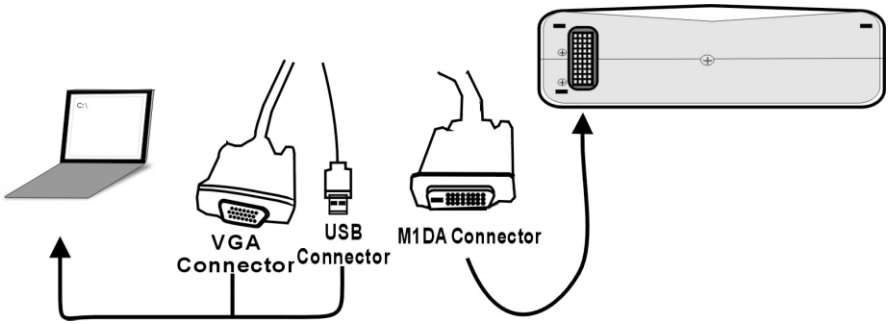

2) For playing video with audio effects

Connecting with the **Video Enhanced Adaptor**; and choose terminals below to connect.

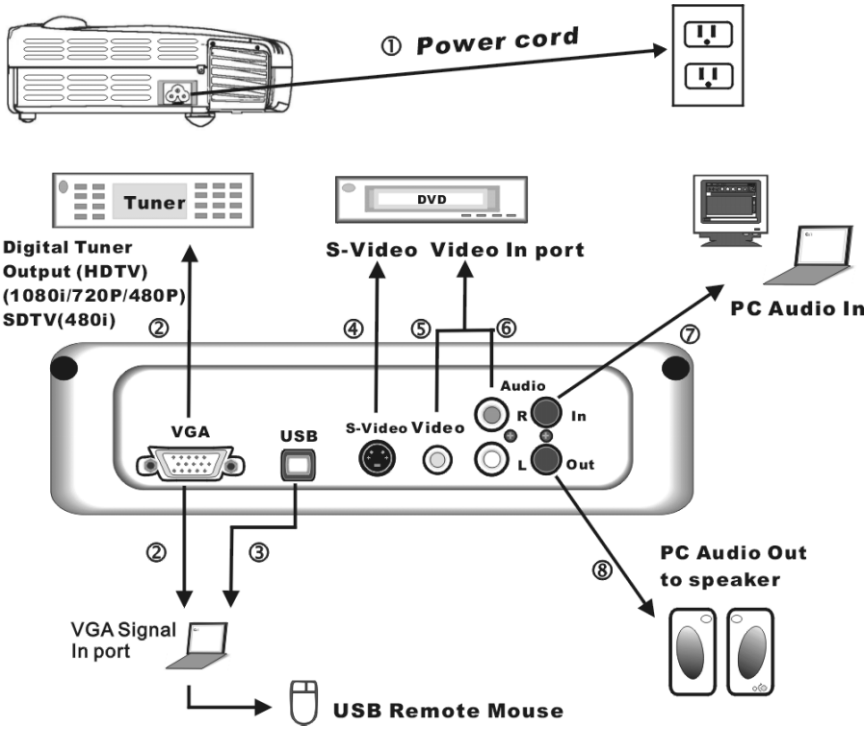

1. Power cord
2. VGA signal in port
3. USB mouse control
4. S-Video signal in port
5.6 Composite Video signal in port
7.8 PC Audio In/Out port

Notes **Connecting to a Computer**

1. Please make sure that both projector and computer are shutdown.
2. Plug USB cable into computer.
3. Plug one end of the VGA cable into the projector.;
4. Plug the other end into the computer.
5. Plug the power cord into the power connector on the side of projector; and plug into the socket.
6. Turn on projector first, then computer.

3.2 Turning on/off the projector

Turning on the projector

1. Remove the lens cover.
2. Make sure the signal cables are connected.
3. Plug-in the power cord. LED indicator flashes slowly.
4. Press the **Power** key on the remote controller or control panel to turn on the projector. LED indicator lights up consistently at this time.
5. The message "Warming up! Please wait." appears on the screen of the projector. Please wait for 20 seconds, the projector will detect the input signal source automatically.
6. If the message "No Signal!" appears on the screen, please check if the signal source has been activated or the signal cables have been connected.
7. To have the best image performance, press "Auto/Enter" each time when you turn on the projector.

Caution When power is on, the projector will automatically detect if the projector is overheated internally. If yes, the LED indicator flashes rapidly and the fan cools down automatically after 8 seconds. The **Power** key does not function under this situation.

Turning off the projector

1. Press the **Power** key to power off the projector lamp.
2. When you press the **Power** key, you'll see the message "Press Power Key again to power off lamp". Then you can press the **Power** key to shutdown the projector; or this message will disappear automatically after 5 seconds.
3. As soon as the lamp is off, the LED indicator flashes rapidly. The **Power** key doesn't function at this time.

Notes: Please wait at least 120 seconds before you turn on the projector again. You should turn on the projector only after the LED indicator flashes slowly.

4. Unplug the power cord.

Caution To protect the lamp, please do not pull out the power cord right after the lamp is off. Please wait at least 120 seconds when the fan stops.

3.3 Adjusting the altitude of the projected image

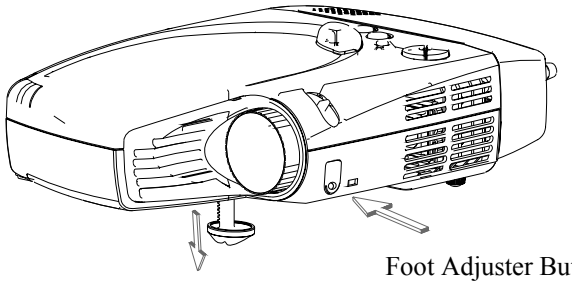

Foot Adjuster Button

Foot Adjuster

Please use the foot adjuster to adjust the height of projector.

Higher

1. Hold the foot adjuster button.
2. Raise the projector to the height you like; and then release the foot adjuster to fix the projector.

Lower

1. Hold the foot adjuster.
2. Lower projector to the height you like; and then release the foot adjuster to fix the projector.

3.4 Adjusting the focus and zoom

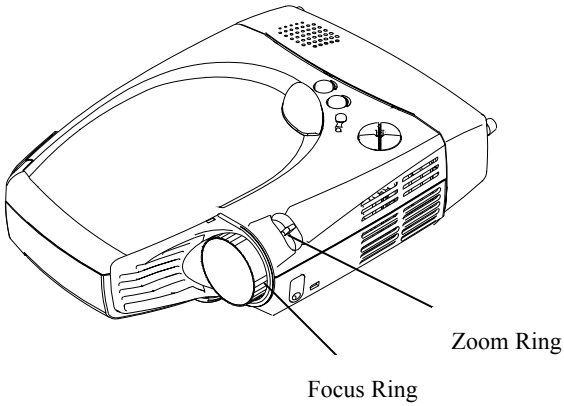

You can zoom in or out the image with the zoom ring. To enlarge the image size, please turn the zoom ring counter-clockwise. To reduce the image size, please turn the zoom ring clockwise. To adjust the focus of the image, please turn the focus ring until the image becomes clear. The projection distance of the projector is 1.45 – 10 meters.

3.5 Projected Image Size

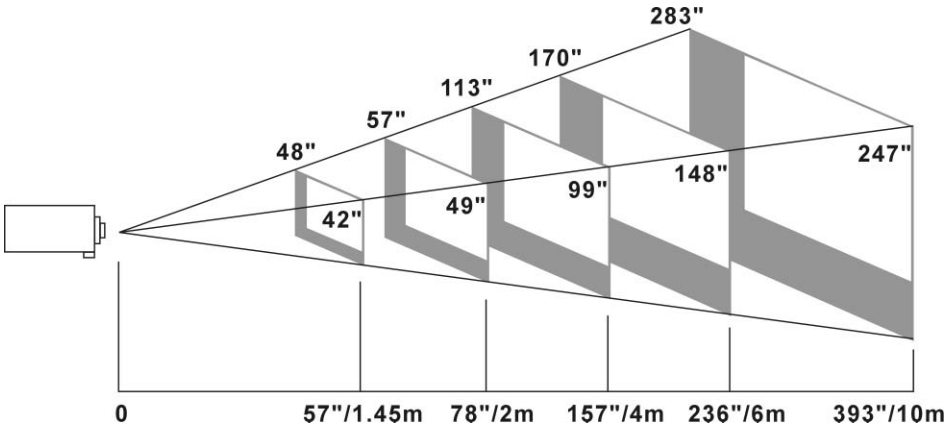

Projection Distance	1.45M	2.0M	4M	6M	10 M
Tele Screen size	42”	49”	99”	148”	247”
Wide Screen Size	48”	57”	113”	170”	283”

4. How to use the projector

This section covers the methods of using and adjusting the projector, as well as the methods of using the control panel, remote controller and menu.

4.1 Initial image adjustment

1 Please follow the previously stated steps to turn on the projector; and keep the projector facing the screen.

2 Turn the zoom ring to adjust the size of the image.

3 Turn the focus ring to adjust the focus of the image.

4 Use the foot adjuster to adjust the altitude of the image.

5 Use either the control panel or remote controller to adjust the image for horizontal position, vertical position or keystone.

6 Adjust the brightness, contrast and color temp of image with the menu.

4.2 Control panel and remote controller

There are two ways to use the projector – control panel and remote controller.

- Control Panel

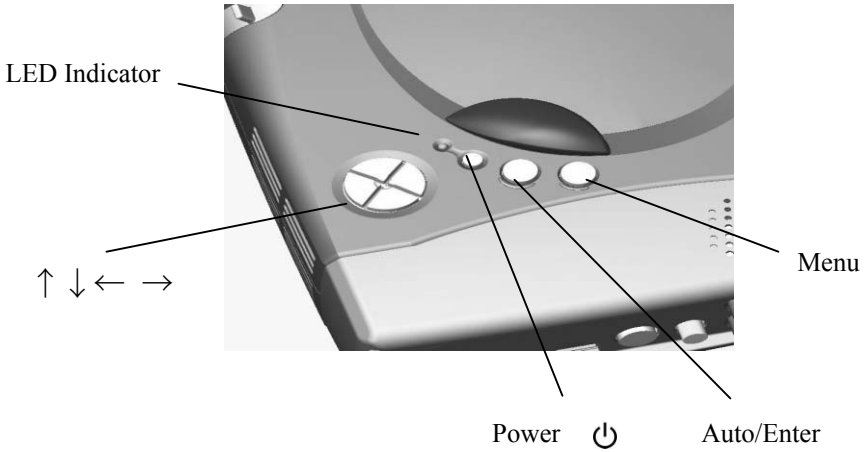

LED Indicator

- When the projector is turned on, the LED indicator flashes. Press the **Power** key to display the mage. At this time, the LED indicator lights up consistently.
- If the LED indicator flashes quickly, the projector is probably in an abnormal condition. Possible reasons include:
    a. If the fan is in an abnormal condition, the message “Fan lock error occurred, Projector going shutdown!” appears on the screen.
    b. If the temperature becomes abnormal, the message “Thermal error occurred, Projector going shutdown!” appears on the screen.
- LED indicator flashes quickly when you start the shutdown process.

Power ⏻

- Please refer to page 8 “Turning on/off the projector”.

Auto/Enter

- This key works as Auto key in normal condition.
- This key works as an Enter key in the menu.

Menu

- Press this key to open the menu. Press again to close the menu.
- If you do not choose any items after opening the menu, then the menu will automatically close after 20 seconds.

↑↓Keys

- You can use the up and down keys to select menu options.
- Usually the down key works as a Source key. You can also press this key to select Analog RGB, Analog Y Pb Pr, Digital RGB, Composite Video, S-Video and Component Video signals in sequence.

← → Keys

- On the menu, press the **Enter** key and then the right key to increase the setup value; or the left key to reduce the setup value.

- Remote controller

Key	Functions
Freeze/Esc/L	• Press this key to freeze the image. Press again to clear the static image. • Press this key to quit the menu if the menu is on the screen. • In the remote-control mouse mode, this key works as the left key of mouse.
Enter/R	• Please check page 13 “Auto/Enter” of “Control panel” for the use of this key on the menu. • In the remote-control mouse mode, this key works as the right key of mouse.
Power	• Please refer to page 8 “Turning on/off the projector”.

Mode	• Press this key and green LED indicator turns on. Then the remote controller can be used as a mouse. ☞ **Be sure to connect USB mouse cable to the computer and projector before using the remote controller as a mouse.**
Menu	• Please refer to page 13 “Menu” of “Control panel”.
Source	• Select Analog RGB, Analog Y Pb Pr, Digital RGB, Composite Video, S-Video and Component Video signals in sequence.
Blank	• Convert the image into blank and fully blue. Press again to restore.
Auto	• Press this key to adjust the phase and frequency automatically.
Pg.Up ⊕	• On the remote control mode, press this key to zoom in the image (*). • When mouse is in use, press this key to turn to previous page.
Pg.Dn ⊖	• On the remote control mode, press this key to zoom out the image (*). • When mouse is in use, press this key to turn to next page.
⏢	Press this key and then left/right keys for keystone. • Press ← key to reduce the length of lower screen. Press → to reduce the length of upper screen. (*) ☞Do not activate when displaying text or spreadsheets to eliminate text distortion
↑↓←→	• In the remote control mode, the function of these keys is the same as the up/down/left/right keys on the panel (*). • In the remote-control mouse mode, the function of these keys is the same as the up/down/left/right key of the mouse.

* Press **Auto** key to return to previous setup.

5. Menu

Press the **Menu** key to open the menu. You can press the up or down key to select the items on the menu; or press **Esc** to quit the menu. To enter the submenu, please press **Enter** key or right key. On the submenu, press the **Menu** or **Esc** key on the remote controller to return to the main menu; or press twice to quit menu.

5.1 Image (VGA mode)

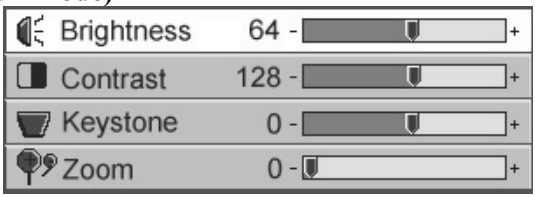

Submenu	Purpose	Using
Brightness (**)	To adjust the brightness of image	□Press ← key to decrease brightness. □Press → to increase brightness. (*)
Contrast	To control the balance between the brightest and darkest parts of the image. You can change the amount of black and white by adjusting contrast.	□Press ← key to decrease contrast. □Press → to increase contrast. (*)
Keystone	To modify the biased image resulted from the improper angle of projector.	□Press ← key to reduce the length of lower screen. □Press → key to reduce the length of upper screen. (*)
Zoom	To enlarge/reduce the image	□Press ← key to zoom out the image. □Press → key to zoom in the image (*) ➢ Please press Enter key to access to zoom pan mode. In this mode, press ←→keys to move the image, press Pg Up and Pg Dn keys on the remote controller to zoom in/out of image.

* Press **Auto** key to return to previous setup.

** If the source is switched to HDTV/DVD 480P, the “Brightness” turns to “Tint” to adjust the balance between red and blue colors in the image.

5.2 Image (Video mode)

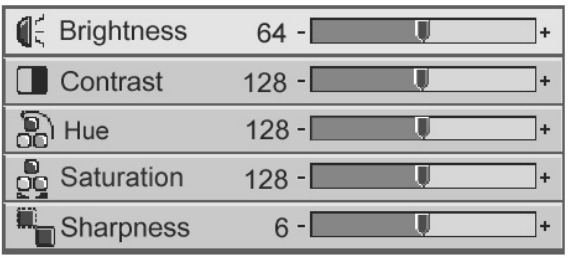

Submenu	Purpose	Using
Brightness	To adjust the brightness of image.	□Press ← key to decrease brightness. □Press → key to increase brightness. (*)
Contrast	To control the balance between the brightest and darkest parts of the image. You can change the amount of black and white.	□Press ← key to decrease contrast. □Press → key to increase contrast. (*)
Hue	To adjust the balance between red and green colors in the image.	□Press ← key to increase the green proportion. □Press → key to increase the red proportion. (*)
Saturation	To change the image from black & white to saturated colors.	□Press ← key to decrease the amount of colors in the image. □Press → key to increase the amount of colors in the image. (*)
Sharpness	To adjust the sharpness of the image.	□Press ← key to decrease the sharpness. □Press → key to increase the sharpness. (*)

* Press **Auto** key to return to previous setup.

5.3 Display (VGA mode)

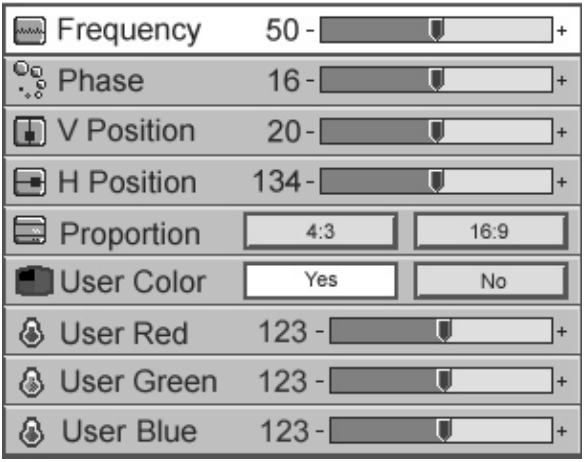

Submenu	Purpose	Using
Frequency	To adjust the frequency of data display to be the same as the frequency of display card of computer. Please use this function to correct the flickering vertical lines shown in the image.	□Press ← → key for adjustment. (*)
Phase	To synchronize the signals of images and display cards. Use this function to correct inconsistent or flickering images.	□Press ← → key for adjustment (*)
V Position	To adjust the vertical position of screen.	□Press ← key to move down the image. □Press → key to move up the image. (*)
H Position	To adjust the horizontal position of screen.	□Press ← key to move the screen to left. □Press → key to move the screen to right. (*)

Proportion	To select the aspect ratio of screen, 16:9 or 4:3.	□Press ← → key for selection.
User Color	For end users to adjust red green and blue colors on their own.	□Choose Yes. User Red, User Green and User Blue options appear. □Choose No. Only Color Temp option appears.
User Red	To adjust the Red color.	□Press ← key to decrease amount of Red color. □Press → key to increase amount of Red color. (*)
User Green	To adjust the Green color.	□Press ← key to decrease amount of Green color. □Press → key to increase amount of Green color. (*)
User Blue	To adjust the Blue color.	□Press ← key to decrease amount of Blue color. □Press → key to increase amount of Blue color. (*)
Color Temp	To adjust the color temp in the range between 6100K and 9300K.	□Press ← key to lower color temp; and the image looks warmer. □Press → to increase color temp; and the image looks cooler. (*)

* Press **Auto** key to return to previous setup.

5.4 Display (Video mode)

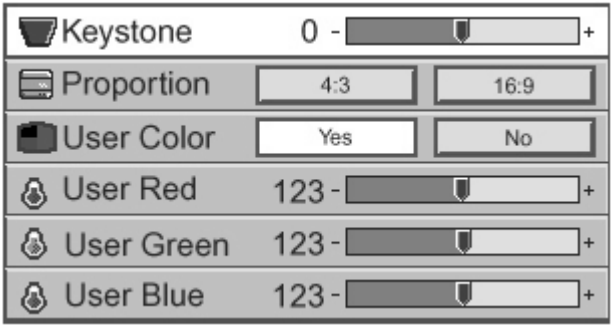

Submenu	Purpose	Using
Keystone	To modify the biased image resulting from the improper angle of projector.	□Press ← key to reduce the length of lower screen. □Press → key to reduce the length of upper screen. (*)
Proportion	To select the aspect ratio of screen, 16:9 or 4:3.	□Press ← → key for selection.
User Color	For end users to adjust red green and blue colors on their own.	□Choose Yes. User Red, User Green and User Blue options appear. □Choose No. Only Color Temp option appears.
User Red	To adjust the Red color.	□Press ← key to decrease amount of Red color. □Press → key to increase amount of Red color. (*)
User Green	To adjust the Green color.	□Press ← key to decrease amount of Green color. □Press → key to increase amount of Green color. (*)

User Blue	To adjust the Blue color.	□Press ← key to decrease amount of Blue color. □Press → key to increase amount of Blue color. (*)
Color Temp	To adjust the color temp in the range between 6100K and 9300K.	□Press ← key to lower color temp; and the image looks warmer. □Press → to increase color temp; and the image looks cooler. (*)

* Press **Auto** key to return to previous setup.

5.5 Audio

Submenu	Purpose or Using
Volume	□Press ← key to turn down the volume. □Press → key to turn up the volume. (*)
Treble	□Press ← key to decrease the volume of treble. □Press → key to increase volume of treble. (*)
Bass	To adjust the medium/low frequency of audio. □Press ← key to decrease bass. □Press → key to increase bass. (*)
Mute	□Select ”Yes” for Mute.

* Press **Auto** key to return to previous setup.

5.6 Management

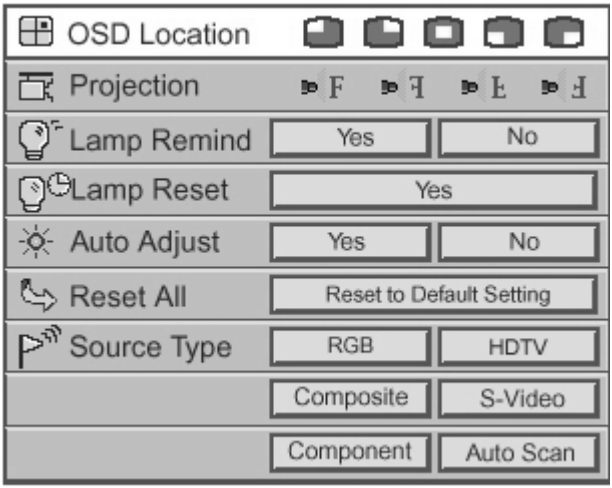

Submenu	Purpose	Using
OSD Location	To display the position of menu on the screen.	□Press ← → key for selection (*)
Projection	(Projection before the Screen) Default (Projection behind the Screen) If you select this function, the projector will reverse images from left to right or vice versa. Thus the image can be projected from behind onto the semi-transparent screen.	□Press ← → key for selection (*)
Lamp Remind	To remind you of the number of hours that the lamp has been lit up. This function allows you to set up the warning message to be displayed 30 hours before the end of the lamp life.	□Press ← → key for selection.

Lamp Reset	To recount hours after replacing the lamp.	□Press the right key. The message “Press Enter key to confirm lamp reset operation!” appears. Please check if the user has replaced the new lamp. If yes, press **Enter** key. If not, press **Menu** key or Esc key on the remote controller to quit.
Auto Adjust	For end users to fix the brightness and contrast settings. This function only works in the VGA mode.	□Choose **Yes**. The values of brightness and contrast vary each time when pressing **Auto** key. □Choose **No**. The values of brightness and contrast remain the same.
Reset All	To return to the factory default.	□Press the right key.
Source Type	To select RGB, Composite, Component, HDTV(**),S-Video, signals or Auto Scan.	□Press ← → key for selection.

* Press “Auto” key to return to previous setup.

** HDTV: supporting EDTV 480p and HDTV 720p & 1080i.

5.7 Language

Please use up and down keys to choose the language you likened and press right key to select. Press the **Menu** key or **Esc** key on the remote controller to return to main menu.

6.1 Replacing the lamp

30 hours before the end of the lamp's life time, the warning message "Lamp life time is up! Replacement suggested!" will display on the screen. Please replace the lamp immediately.

Steps:

1. Power off the projector.
2. Unplug the power cord.
3. Cool down projector for at least 30 minutes.
4. Use a screwdriver to remove the shell and screws on the lamp.
5. Remove lamp.
6. Gently process the new lamp module into the lamp bay, then replaces the lamp module retaining screws.
7. Replace the lamp bay access panel, and then replace the access panel screw.

Remove screws from the lamp cover with a screwdriver; and then press down the lock to open that cover.

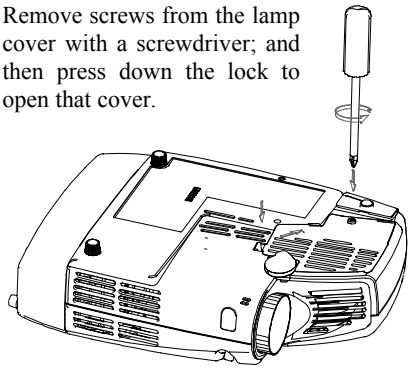

Remove 3 screws from the lamp holder; and pull out the handle to replace the lamp in the holder.

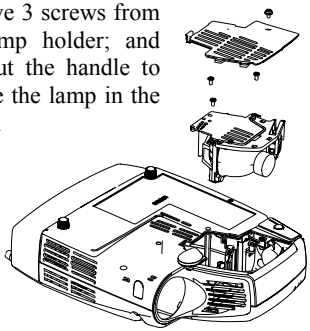

6.2 Cleaning lens

Please follow these steps to clean the projector lens:

1 Pour an adequate amount of cleanser to a piece of clean soft material. The lens will be damaged if you use the cleanser containing particles, solvent, or other inferior chemical solvent.
2 Use the soft material to wipe the lens in a circular direction.
3 Cover the lens with the cap if you are not going to use the projector right away.

7. Appendix

7.1 Common problems and trouble-shooting

If you are having a problem with your projector, please check the following:
If you still cannot solve the problem, please contact your local distributor or our service center.

Q.: No image on the screen at all?

⇨ Make sure that you have properly connected the video enhanced adapter and the relevant cables mentioned in previous chapters.
⇨ Make sure the plug is not bended or broken.
⇨ Please check if the lamp has been installed properly.
⇨ Please check if you have removed the lens cap and turned on the projector.

Q.: Incorrect resolution?

⇨ Please check if the video card of your computer has been set at a resolution less than 1280 X 1024.

Q.: Unsteady or flickering image

⇨ Press the **Auto** key of the remote controller or the **Auto/Enter** key of the projector.
⇨ Or use **Phase** on the **Display** menu to correct the problem.
⇨ You can also change the color setup of the display card on your computer.

Q.: Vertical flickering stripes on the image

⇨ Press the **Auto** key of the remote controller or the **Auto/Enter** key of the projector.
⇨ You can also use **Frequency** on the **Display** menu to adjust the stripes.
⇨ Or re-set the display mode of your display card; and make it compatible with the projector.

Q.: Image becomes blurred

⇨ Adjust the focus ring of the projector.

⇨ Make sure that distance between the screen and projector is adequate (1.45~10m)

Q.: The colors projected by your projector look different from the colors of your computer or VCR.

⇨ This is not a problem. You can adjust the brightness, color or contrast on the menu to change colors.

Q.: When the projector is connected to a DVD player, playing a film with the ratio 16:9, the image is reshaped.

⇨ Adjust the aspect ratio of the projector to 4:3.

Q.: Up-side-down image

⇨ Open the menu; and then select **Management** to adjust the projection direction.

Q.: Lamp burned out or cracked.

⇨ The lamp burns out when its life is over. It might crack and sometimes the broken pieces lead to the result that a blower is blocked and stops turning. In such a case, please contact the licensed local distributor to purchase the replacement. To change the lamp, please follow the steps stated in “Replacing the lamp”.

7.2 Specifications

Model No.	EIP-1
Resolution	XGA (1024*768)
Size	229 x 193 x 69 mm
Weight	3.5 lbs
Lamp	150W VIP
Brightness	1400 Lumens
Projection distance	1.45m ~10m
Throw Ratio	1.34:1 ~ 1.6:1 (Distance: Diagonal)
Zoom Ratio	1.2:1 (Manual Zoom/Focus)
Uniformity	85%
Aspect Ratio	4:3 / 16:9 screen selectable
Contrast Ratio	900:1
Horizontal Frequency	31.5 - 80 kHz
Vertical Scan Rate	56 - 85 Hz
Video compatibility	NTSC / PAL
VGA compatibility	RGB/DVD 480P, HDTV (1080i/720P/480P)
Power supply	100 to 240 VAC, 0.91A~2.2A,50 to 60 Hz
Power Consumption	220W

Input Terminal

- DVI (M1DA)
- USB
- RGB (M1DA-D-Sub 15 pin)
- RS232 (M1DA)
- YPbPr (M1DA,VGA)
- S-Video Mini DIN 4 pin
- Audio: RCA Jack
- 3.5mm Mini Jack
- Composite Video (RCA Jack)

Output Terminal

- 1 watt speaker

* All specifications are subject to change without notice.

This device complies with Part 15 of the FCC Rules. Operation is subject to the following two conditions: (1) the device may not cause harmful interference, and (2) this device must accept any interference received, including interference that may cause undesired operation.

A-key to better communications

U.S.A.
EIKI International, Inc.
30251 Esperanza
Rancho Santa Margarita
CA 92688-2132
U.S.A.
Tel : 800-242-3454 (949)-457-0200
Fax : 800-457-3454 (949)-457-7878
E-Mail : usa@eiki.com

Deutschland & Österreich
EIKI Deutschland GmbH
Am Frauwald 12
65510 Idstein
Deutschland
Tel : 06126-9371-0
Fax : 06126-9371-14
E-Mail : info@eiki.de

Canada
EIKI CANADA - Eiki International, Inc.
P.O. Box 156, 310 First St. - Unit 2,
Midland, ON, L4R 4K8, Canada
Tel : 800-563-3454 (705)-527-4084
Fax : 800-567-4069 (705)-527-4087
E-Mail : canada@eiki.com

Eastern Europe
EIKI CZECH spol. s.r.o.
Umělecká 15
170 00 Praha 7
Czech Republic
Tel : +42 02 20570024
+42 02 20571413
Fax : +42 02 20571411
E-Mail : easterneurope@eiki.de

Japan & Worldwide
EIKI Industrial Company Limited.
4-12 Banzai-Cho, Kita-Ku, Osaka,
530-0028 Japan
Tel : +81-6-6311-9479
Fax : +81-6-6311-8486
E-Mail : WorldWide@eiki.com

WorldWide Website http://www.eiki.com

7538500013-0A