USA's primary source for projector lamps

myprojectorlamps

PROJECTOR OWNER'S MANUAL

Dream Vision

STAR LIGHT

Need a replacement lamp for this projector?

www.myprojectorlamps.com

Original manufacturer manual, provided unmodified as a courtesy of MyProjectorLamps.com.
All trademarks belong to their respective owners.

StarLight

User Manual

DreamVision

WE MAKE THE WORLD DREAM

Changes

Dreamvision provides this manual 'as is' without warranty of any kind, either expressed or implied, including but not limited to the implied warranties or merchantability and fitness for a particular purpose. Dreamvision may make improvements and/or changes to the product(s) and/or the program(s) described in this publication at any time without notice.
This publication could contain technical inaccuracies or typographical errors. Changes are periodically made to the information in this publication; these changes are incorporated in new editions of this publication.

Copyright

All right reserved. No part of this document may be copied, reproduced or translated. It shall not otherwise be recorded, transmitted or stored in a retrieval system without the prior written consent of Dreamvision.

Guarantee

Dreamvision provides a guarantee relating to perfect manufacturing as part of the legally stipulated terms of guarantee. On receipt, the purchaser must immediately inspect all delivered goods for damage incurred during transport, as well as for material and manufacturing faults. Dreamvision must be informed immediately in writing of any complaints.
If the purchaser or third party caries out modifications or repairs on goods delivered by Dreamvision, or if the goods are handle incorrectly, in particular if the systems are commissioned operated incorrectly or if, after the transfer of risks, the goods are subject to influences not agreed upon in the contract, all guarantee claims of the purchaser will be rendered invalid. Not included in the guarantee coverage are system failures which are attributed to programs or special electronic circuitry provided by the purchaser, e.g. interfaces. Normal wear as well as normal maintenance are not subject to the guarantee provided by Dreamvision either.
The environmental conditions as well as the servicing and maintenance regulations specified in this manual must be complied with by the customer.

Trademarks

Brand and product names mentioned in this manual may be trademarks, registered trademarks or copyrights of their respective holders. All brands and product names mentioned in this manual serve as comments or examples and are not to be understood as advertising for the products of their manufactures.

TABLE OF CONTENTS

1.0 SAFETY INSTRUCTIONS 5
1.1 Important information 5
Lead-free regulation 5
Information for Users on Disposal of Old Equipment 5
About the installation place 5
1.2 Important safeguards 5
1.3 REGIONAL SPECIFIC INFORMATION 7
FCC INFORMATION (USA ONLY) 7

2.0 INSTALLATION GUIDELINES 8
2.1 Environment of Use 8
Mounting this unit to the ceiling 8
Precautions of Usage 8
2.2 Air-Flow and Space Requirements 8
2.3 Ceiling mounting the unit 9
Precautions for Ceiling-mount 9
2.4 Projection Distance and Offset Setting 10
Projection Distance 10
Projector position : setting the correct lens shift 10
Adjust the picture Focus 12
Adjust the picture Zoom 12

3.0 REMOTE CONTROL UNIT (RCU) 13
3.1 General view 13
3.2 Loading and replacing batteries 13
3.3 How to use the remote control unit 14

4.0 GETTING STARTED 15
4.1 General View 15
Front side 15
Rear side 15
Input Panel side 15
4.2 Connecting the Power Cord 16
4.3 Operating LEDs 17
4.4 Operating and Navigation Buttons 18

5.0 CONNECTIONS 18
5.1 Connecting a device to the projector 19
5.2 Connecting a SCART device 20
5.3 Caution when connecting a device 20

6.0 MENU AND PICTURE SETTING 21
6.1 Menu Structure 21
6.2 Picture Adjust menu 24
Picture Mode 24
Contrast 24
Brightness 24
Color 24
Tint 24
Color Temperature 24
Gamma 24
Advanced 25
Lens Aperture 25
Reset 25
6.3 Input Signal menu 26
HDMI Inputs 26
Component 26
Video / S-Video 26
PC (StarLight2 only) 26

Picture Position 26
Aspect Ratio 26
V-Stretch (for Video sources) 27
Over Scan (only SD) and Mask (only HD) 28
Film Mode (only 480i, 576i, 1080i) 28
6.4 Installation Menu 28
Lens Control 28
Pixel Adjust 28
Installation Style 29
Keystone 29
Screen Adjust 29
6.5 Display Setup Menu 29
Back Color 29
Menu Position 29
Menu Display 29
Line Display 29
Source Display 29
Logo 29
Language 29
6.6 Function Menu 29
Lamp Power 29
Test Pattern 30
Off-Timer 30
High Altitude Mode 30
6.7 Information Menu 30
Input Source 30
Source 30
Resolution 30
H. Frequency 30
V. Frequency 30
Deep Color 30
Lamp Time 30
6.8 Expert Calibration 30

7.0 ANAMORPHIC LENS 31
7.1 Optional CineWide and 2.35 THEATRE System 31
7.2 Using the Remote Control Unit. 31
7.3 CineWide and CineWide PRO options 32
7.4 2.35 THEATER System 32

8.0 MAINTENANCE 34
8.1 Clean Dirt on the Cabinet 34
8.2 Dirt on the Lens 34
8.3 Replacing the Lamp 34
8.4 Cleaning and Replacing the Dust Filters 35
8.5 Troubleshooting 35

9.0 MISCELLANEOUS 37
9.1 RS-232 input and IR Codes 37
Communication Specifications 37
Pin assignation 37
Command Format 37
Available Operating commands 37
Available Reference and Response commands 40
9.2 PC compatible signals 41
On HDMI Inputs 41
On Sub-D15 (VGA) input 41
9.3 Specifications 43
Overview 43
Dimensions 44

1.0 SAFETY INSTRUCTIONS

1.1 Important information

Lead-free regulation

This product has a High Intensity Discharge (HID) lamp that contains a small amount of mercury. It also contains lead in some components.
Disposal of these materials may be regulated in your community due to environmental considerations. For disposal or recycling information please contact your local authorities, or the Electronics Industries Alliance: http://www.eiae.org.

Information for Users on Disposal of Old Equipment

This symbol indicates that the electrical and electronic equipment should not be disposed as general household waste at its end of life. Instead, the product should be handed over to the applicable collection point for the recycling of electrical and electronic equipment for proper treatment, recovery and recycling in accordance with your national legislation.
By disposing of this product correctly, you will help to conserve natural resources and will help prevent potential negative effects on the environment and human health which could otherwise be caused by inappropriate waste handling of this product.
For more information about collection point and recycling of this product, please contact your local municipal office, your household waste disposal service or the shop where you purchased the product. Penalties may be applicable for incorrect disposal of this waste, in accordance with national legislation.

Other Countries outside the European Union:

If you wish to dispose of this product, please do so in accordance with applicable national legislation or other rules in your country for the treatment of old electrical and electronic equipment.

About the installation place

Do not install the projector in a place that cannot support its weight securely.
If the installation place is not sturdy enough, the projector could fall or overturn, possibly causing personal injury.

CAUTION:
To reduce the risk of electric shock, do not remove cover. Refer servicing to qualified service personnel. This projector is equipped with a 3-blade grounding type plug to satisfy FCC rule. If you are unable to insert the plug into the outlet, contact your electrician.

WARNING:
To prevent fire or shock hazards, do not expose this appliance to rain or moisture. This apparatus must be earthed.

1.2 Important safeguards

Electrical energy can perform many useful functions. This unit has been engineered and manufactured to assure your personal safety. **But IMPROPER USE CAN RESULT IN POTENTIAL ELECTRICAL SHOCK OR FIRE HAZARD.** In order not to defeat the safeguards incorporated into this product, observe the following basic rules for its installation, use and service.

The power input is auto-ranging from 100 to 240 VAC.

Please read these Important Safeguards carefully before use.

- All the safety and operating instructions should be read before the product is operated.
- All warnings on the product and in the operating instructions should be adhered to.
- All operating instructions should be followed.
- Place the projector near a wall outlet where the plug can be easily unplugged.
- Unplug this product from the wall outlet before cleaning. Do not use liquid cleaners or aerosol cleaners. Use a damp cloth for cleaning.
- Do not use attachments not recommended by the product manufacturer as they may be hazardous.
- Do not use this product near water. Do not use immediately after moving from a low temperature to high

temperature, as this causes condensation, which may result in fire, electric shock, or other hazards.

- Do not place this product on an unstable cart, stand, or table. The product may fall, causing serious injury to a child or adult, and serious damage to the product. The product should be mounted according to the manufacturer's instructions, and should use a mount recommended by the manufacturer.
- When the product is used on a cart, care should be taken to avoid quick stops, excessive force, and uneven surfaces which may cause the product and cart to overturn, damaging equipment or causing possible injury to the operator.
- Slots and openings in the cabinet are provided for ventilation. These ensure reliable operation of the product and protect it from overheating. These openings must not be blocked or covered. (The openings should never be blocked by placing the product on bed, sofa, rug, or similar surface. It should not be placed in a built-in installation such as a bookcase or rack unless proper ventilation is provided and the manufacturer's instructions have been adhered to). For proper ventilation, separate the product from other equipment, which may prevent ventilation and keep a distance of more than 5-9" (150 mm).
- This product should be operated only with the type of power source indicated on the label. If you are not sure of the type of power supply to your home, consult your product dealer or local power company.
- This product is equipped with a three-wire plug. This plug will fit only into a grounded power outlet. If you are unable to insert the plug into the outlet, contact your electrician to install the proper outlet. Do not defeat the safety purpose of the grounded plug.
- Power-supply cords should be routed so that they are not likely to be walked on or pinched by items placed upon or against them. Pay particular attention to cords at doors, plugs, receptacles, and the point where they exit from the product.
- For added protection of this product during a lightning storm, or when it is left unattended and unused for long periods of time, unplug it from the wall outlet and disconnect the cable system. This will prevent damage to the product due to lightning and power line surges.
- Do not overload wall outlets, extension cords, or convenience receptacles on other equipment as this can result in a risk of fire or electric shock.
- Never push objects of any kind into this product through openings as they may touch dangerous voltage points or short out parts that could result in a fire or electric shock. Never spill liquid of any kind on the product.
- Do not attempt to service this product yourself as opening or removing covers may expose you to dangerous voltages and other hazards. Refer all service to qualified service personnel.
- Unplug this product from the wall outlet and refer service to qualified service personnel under the following conditions:

a) When the power supply cord or plug is damaged.

b) If liquid has been spilled, or objects have fallen on the product.

c) If the product has been exposed to rain or water.

d) If the product does not operate normally by following the operating instructions. Adjust only those controls that are covered by the Operation Manual, as an improper adjustment of controls may result in damage and will often require extensive work by a qualified technician to restore the product to normal operation.

e) If the product has been dropped or damaged in any way.

f) When the product exhibits a distinct change in performance - this indicates a need for service.

- When replacement parts are required, be sure the service technician has used replacement parts specified by the manufacturer or with same characteristics as the original part. Unauthorized substitutions may result in fire, electric shock, or other hazards.
- Upon completion of any service or repairs to this product, ask the service technician to perform safety checks to determine that the product is in proper operating condition.
- The product should be placed more than one foot away from heat sources such as radiators, heat registers, stoves, and other products (including amplifiers) that produce heat.
- When connecting other products such as VCR's, and personal computers, you should turn off the power of this product for protection against electric shock.
- Do not place combustible behind the cooling fan. For example, cloth, paper, matches, aerosol cans or gas lighters that present special hazards when over heated.
- Do not look into the projection lens while the illumination lamp is turned on. Exposure of your eyes to the strong light can result in impaired eyesight.
- Do not look into the inside of this unit through vents (ventilation holes), etc. Do not look at the illumination lamp directly by opening the cabinet while the illumination lamp is turned on. The illumination lamp also contains ultraviolet rays and the light is so powerful that your eyesight can be impaired.
- Do not drop, hit, or damage the light-source lamp (lamp unit) in any way. It may cause the light-source lamp to break and lead to injuries. Do not use a damaged light source lamp. If the light-source lamp is broken, ask your dealer to repair

it. Fragments from a broken light-source lamp may cause injuries.

- The light-source lamp used in this projector is a high pressure mercury lamp. Be careful when disposing of the light source lamp. If anything is unclear, please consult your dealer.
- Do not ceiling-mount the projector to a place which tends to vibrate; otherwise, the attaching fixture of the projector could be broken by the vibration, possibly causing it to fall or overturn, which could lead to personal injury.
- Use only the accessory cord designed for this product to prevent shock.
- The power supply voltage rating of this product is AC120 V, AC100 V – AC240 V, the power cord attached conforms to the following power supply voltage. Use only the power cord designated by our dealer to ensure Safety and EMC.
- When it is used by other power supply voltage, power cable must be changed.
- Ensure that the power cable used for the projector is the correct type for the AC outlet in your country. Consult your product dealer.
- **Caution:** Do not allow any unqualified person to install the unit. Be sure to ask your dealer to install the unit (e.g. attaching it to the ceiling) since special technical knowledge and skills are required for installation. If installation is performed by an unqualified person, it may cause personal injury or electrical shock.

1.3 REGIONAL SPECIFIC INFORMATION

FCC INFORMATION (USA ONLY)

Changes or modification not approved by Dreamvision could void the user's authority to operate the equipment.
Note: This equipment has been tested and found to comply with the limits for Class B digital devices, pursuant to Part 15 of the FCC Rules. These limits are designed to provide reasonable protection against harmful interference in a residential installation. This equipment generates, uses, and can radiate radio frequency energy and, if not installed and used in accordance with the instructions, may cause harmful interference to radio communications. However, there is no guarantee that interference will not occur in a particular installation. If this equipment does cause harmful interference to radio or television reception, which can be determined by turning the equipment off and on, the user is encourage to try to correct the interference by one or more of the following measures:

- Reorient or relocate the receiving antenna.
- Increase the separation between the equipment and receiver.
- Connect the equipment into an outlet on a circuit different from that to which the receiver is connected.
- Consult the dealer or an experienced radio/TV technician for help.

FCC

The Federal Communications Commission (FCC) is an independent United States government agency, created, directed, and empowered by Congressional statute.
The FCC was established by the Communications Act of 1934 as the successor to the Federal Radio Commission and is charged with regulating all non-Federal Government use of the radio spectrum, including radio and television broadcasting, and all interstate telecommunications like wire, satellite and cable as well as all international communications that originate or terminate in the United States. The FCC's jurisdiction covers the 50 states, the District of Columbia, and U.S. possessions.

2.0 INSTALLATION GUIDELINES

2.1 Environment of Use

- Do not use this unit in rooms with cigarette smoke or oily smoke. This may cause the unit to malfunction.

Mounting this unit to the ceiling

Check temperature around the unit. When a heater is in use, the ceiling may reach a temperature higher than anticipated, hence leading to malfunction of the unit.

Precautions of Usage

This unit makes use of a light source lamp that may reach a high temperature during projection. Do not allow projection under the following conditions. Doing so may cause fire or malfunction of the unit.

- Projection with the unit laid on sides.
- Projection with the unit installed in an unreasonable angle. Avoid using this unit at an angle of more than 15° horizontally and 5° vertically. Doing so may cause unevenness in the color or shorten the lamp life.
- Projection at a location that blocks the air inlets or exhaust vents.
- Projection at a place exposed to air blasts from an air conditioner.

2.2 Air-Flow and Space Requirements

This unit can be installed in table, ceiling, rear table or rear ceiling position. Make sure that the unit is installed within the space requirements described below.

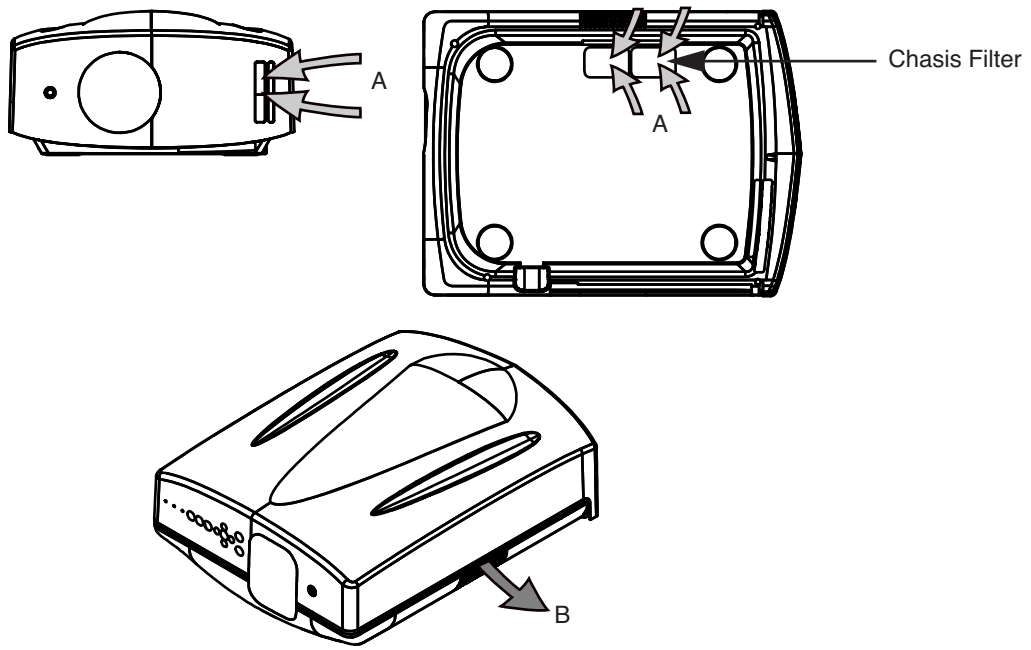

- A: Air inlets
- B: Air outlet

Air flow

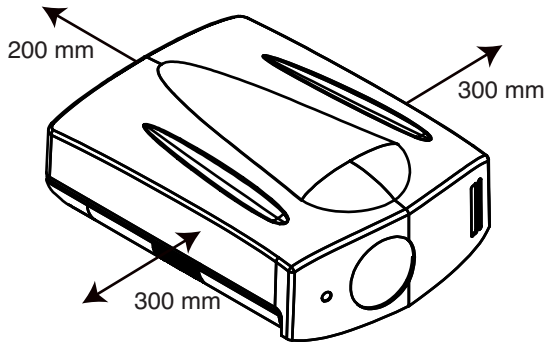

Space requirements

2.3 Ceiling mounting the unit

When mounting of this unit is required, make use of the 4 screw holes (M5x20 screws) at the bottom of this unit indicated by the letter A. Allow sufficient space around the air inlets to avoid blocking them.

Precautions for Ceiling-mount

- To ceiling-mount this unit, special expertise and techniques are necessary. Be sure to ask your dealer or specialist to perform mounting.
- Do not mount at places that may be subjected to vibration and shock.
- Depth of the screw holes (A) is 22 mm. Do not use long screws as you may damage inside the projector.
- Install at a safe place in case this unit or a part of it may drop. If the light-source lamp is broken, small pieces of glass from the mesh of the filter may appear outside the unit.
- Regardless whether the unit is still under guarantee, Dreamvision is not liable for any product damage caused by mounting the unit with third party ceiling mount or when the environment is not suitable for ceiling-mount.

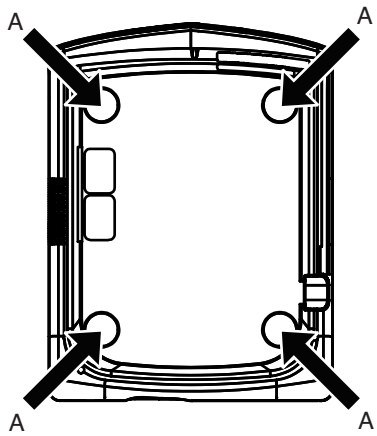

2.4 Projection Distance and Offset Setting

Projection Distance

Projection Screen Size Diagonal size (Aspect Ratio 16:9)	Projection Screen Size Base size (Aspect Ratio 16:9)	Projection Screen Height (Aspect Ratio 16:9)	Starlight
			Projecting Distance minimum - maximum
50" (1270 mm)	43,6" (1107 mm)	24,5" (623 mm)	151 cm - 305 cm
60" (1524 mm)	52,3" (1328 mm)	29,4" (747 mm)	178 cm - 366 cm
70" (1778 mm)	61,0" (1550 mm)	34,3" (872 mm)	209 cm - 428 cm
83" (2108 mm)	72,3" (1837 mm)	40,7" (1034 mm)	251 cm - 507 cm
92" (2337 mm)	80,2" (2037 mm)	45,1" (1146 mm)	279 cm - 562 cm
100" (2540 mm)	87,2" (2214 mm)	49,0" (1245 mm)	301 cm - 613 cm
110" (2794 mm)	95,9" (2435 mm)	53,9" (1370 mm)	331 cm - 675 cm
138" (3505 mm)	120,3" (3055 mm)	67,7" (1718 mm)	418 cm - 843 cm
150" (3810 mm)	130,7" (3321 mm)	73,5" (1868 mm)	453 cm - 860 cm
180" (4572 mm)	156,9" (3985 mm)	88,2" (2241 mm)	545 cm - 1107 cm
200" (5080 mm)	174,3" (4428 mm)	98,1" (2491 mm)	6060 cm - 1230 cm

- The projection screen sizes and projecting distances in the table above are provided only as a guide. Please use them as reference during installation.
- Use a projection image of 16:9 aspect ratio for setup adjustment.

Projector position : setting the correct lens shift

The optimum image can be obtained when the centre of this projector's lens and the screen are placed perpendicular to each other. Take note of the projection angle when placing them. You can also use up to +/- 15° up and down position and configure trapezoidal correction.

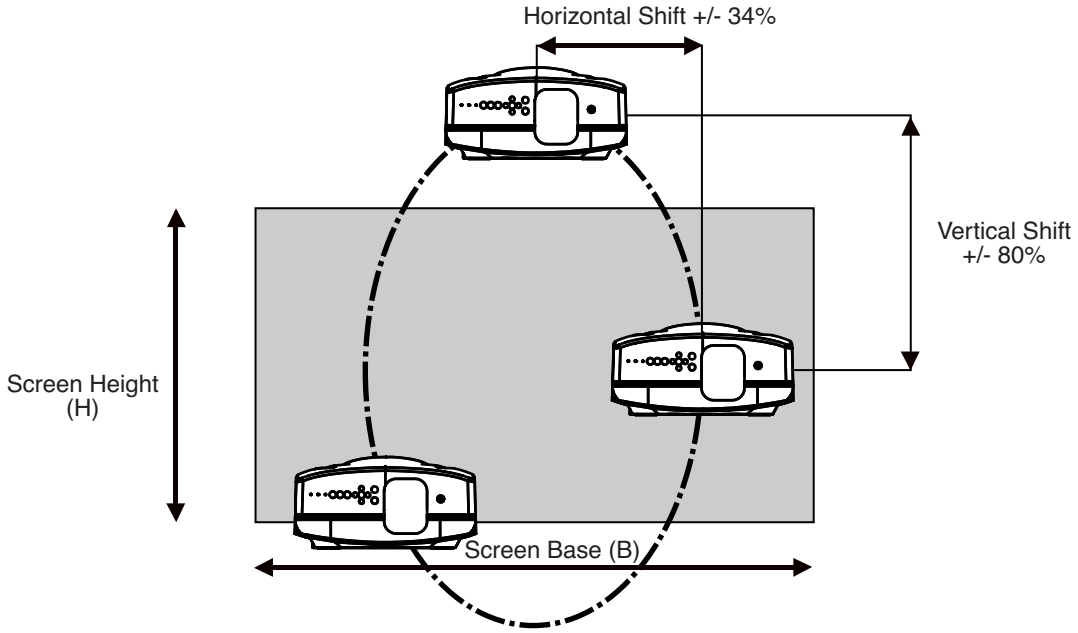

This unit comes with a vertical and horizontal shift to suit most installations. Make sure that your installation does not exceed 80% vertical offset and 34% horizontal offset to avoid trapezoidal correction.

This unit comes with a optical shift that features vertical and horizontal adjustment of the projection screen position. Adjust the picture to your screen.

- The Vertical Shift level is between -80% and 80% of the Screen Height (0.80 x H).
- The Horizontal Shift level is between -34% and 34% of the Screen Base (0.34 x B).
- The shift level is set to 0% vertically and horizontally by default, that means that the optical lens is aligned with the center of the screen.
- If the projector is not installed vertically, use trapezoidal Correction to fulfill your screen.
- If you plan to use both the vertical and horizontal shifts, make sure to not exceed the values contained in the tab below:

Left - Right shift	0%	5%	10%	15%	20%	25%	30%	34%
max. Up - Down shift	80%	74%	66%	57%	47%	34%	18%	0%

2.4.0.1 Adjust the picture position

The Starlight projector has motorized vertical and horizontal shifts. Browse into the Menu to the [Lens Control] setting into the [Installation] menu, select the shift adjustment. Or use the direct access button on the Remote Control Unit [LENS] to make the lens control adjustment.
You can use self-generated test pattern of the projector or an external pattern, from a calibration DVD by example, by setting the [Test Pattern] to Off.

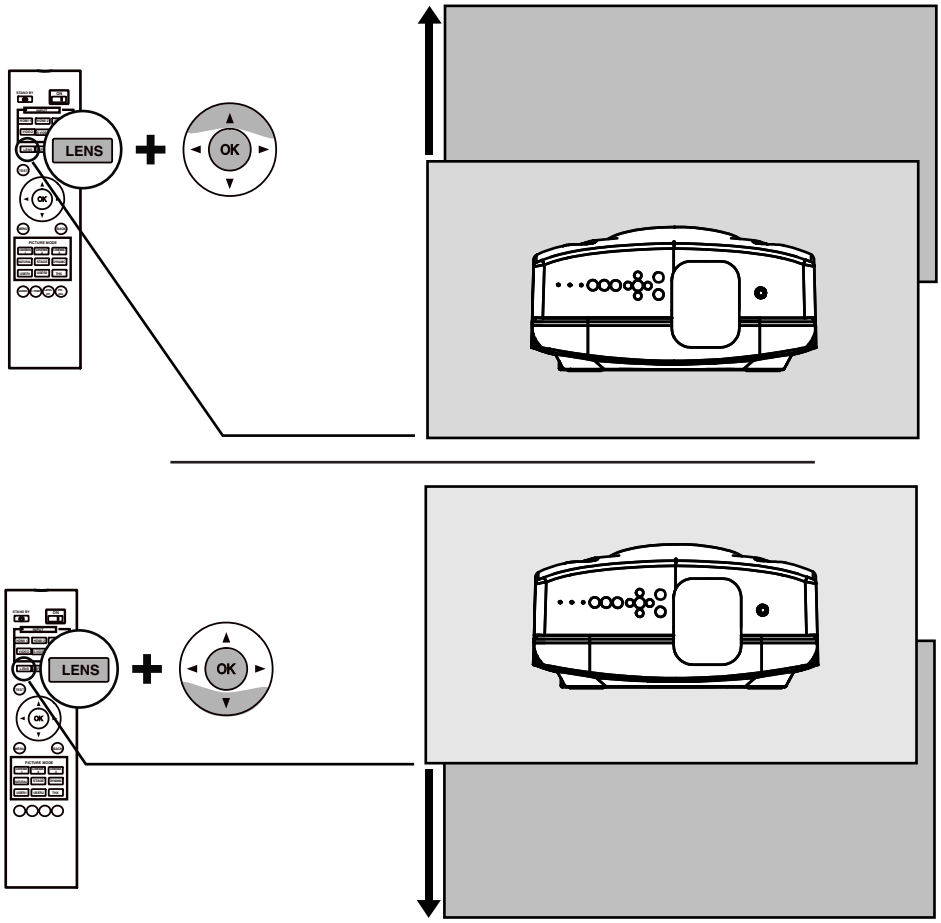

Select the [Shift] adjustment and move the picture with the navigation buttons.

Adjust the picture Focus

Into the [Lens Control] menu, press the [Ok] button to access the [Focus] adjustment. Use the up and down buttons to adjust the picture focus.

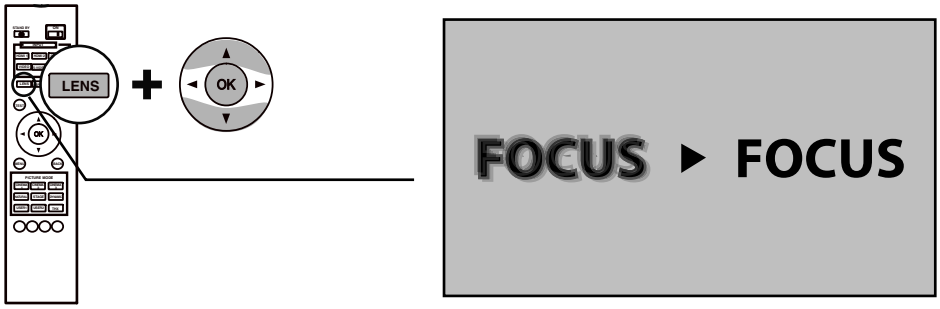

Select the [Focus] adjustment and obtain a clear picture using [Up] and [Down] buttons.

Adjust the picture Zoom

Into the [Lens Control] menu, press the [Ok] button to access the [Zoom] adjustment. Use the up and down buttons to adjust the picture size until the screen is completely filled.

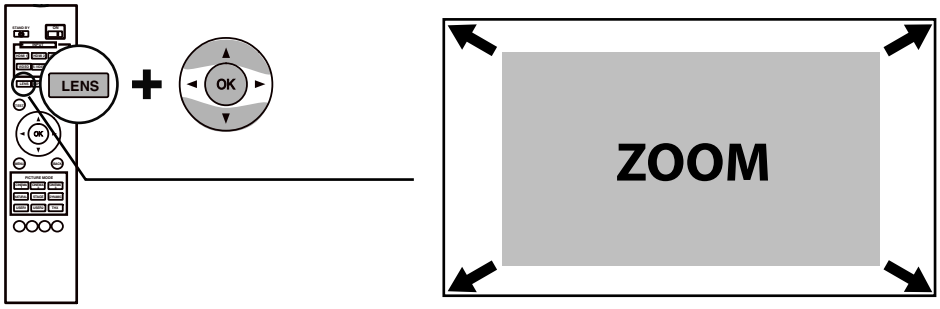

Select the [Zoom] adjustment and resize the picture using [Up] and [Down] buttons.

3.0 REMOTE CONTROL UNIT (RCU)

3.1 General view

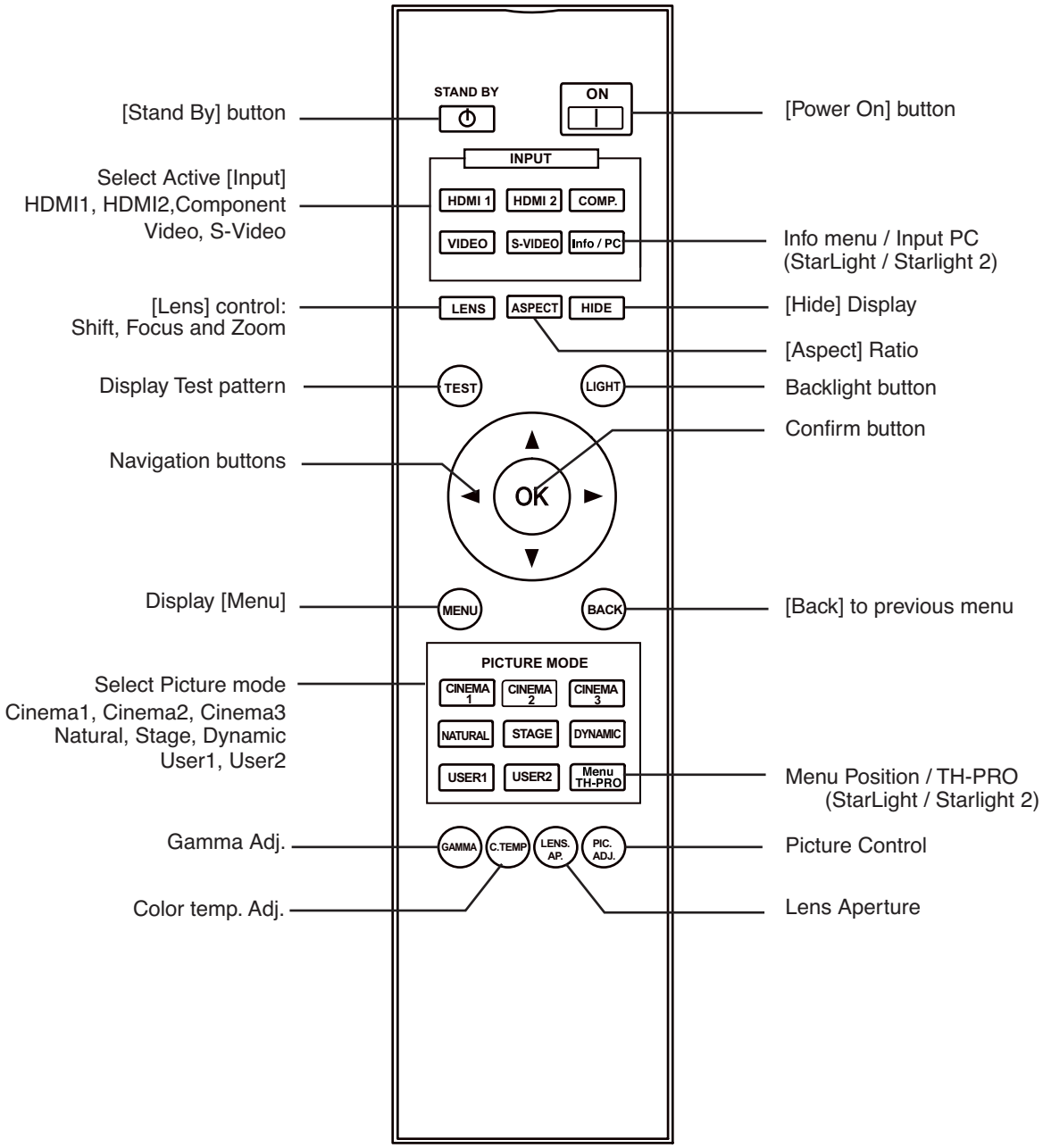

3.2 Loading and replacing batteries

- Push the cover tab with the fingernail a little backwards and pull upwards the cover top.
  Slide the cover forward to remove.
- Push the battery body towards the spring and lift up to remove.
  Insert two AAA size batteries, making sure the polarities match the + and - marks inside the battery compartment.
- Insert the lower tab of the battery cover in the gap at the bottom of the remote control, and press the cover until it is firmly closed.

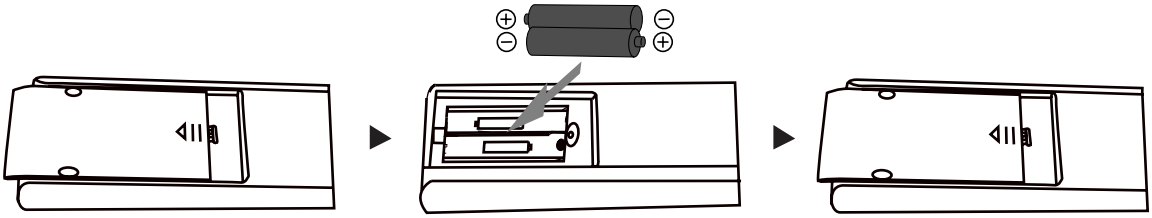

CAUTION WHEN USING BATTERIES

Do not mix new and old batteries.Do not mix different type of batteries as they are different in characteristics. Insert batteries according to the + and - marks on the battery case. Do not put batteries into fire or recharge them if they are not design to. Remove the batteries if the remote control is not to be used for a prolonged period. Use manganese batteries wherever possible, Do not use rechargeable batteries.

NOTICE

If the remote control has to be brought closer to the projector to operate, it means that the batteries are wearing out. When this happens, replace the batteries. Insert the batteries according to the + and - marks.

3.3 How to use the remote control unit

The operable distance of the remote control unit is about 7m for direct reception and within 30 degree angle with respect to the sensor.

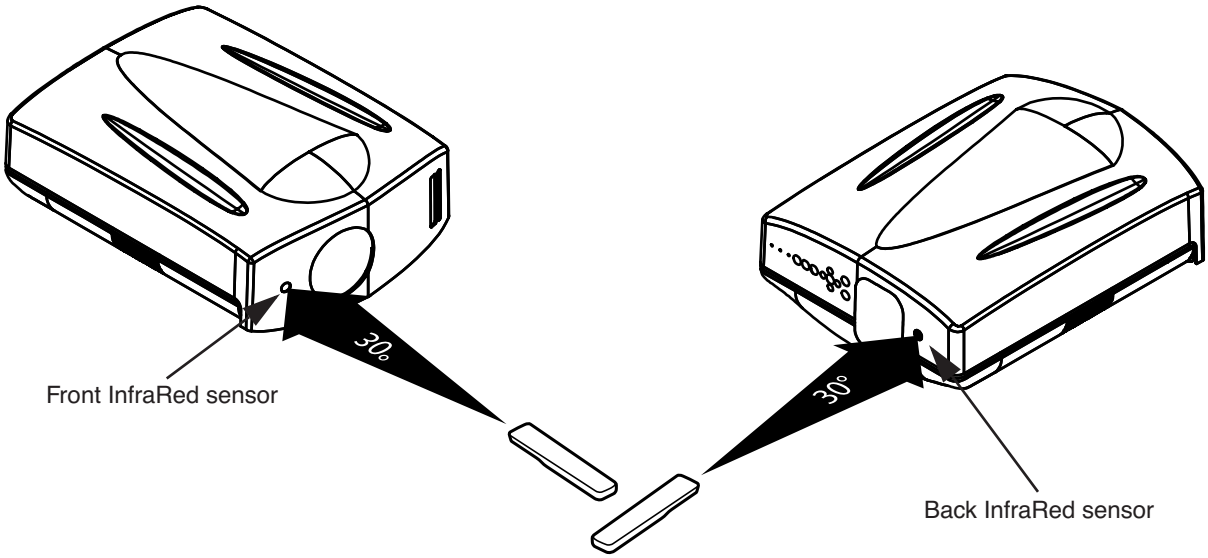

The remote control unit can be used by having the transmission signal reflected off a screen, as the effect of signals reflected from the RCU differ with the type of screen used, operable distance may decrease.

4.0 GETTING STARTED

4.1 General View

Front side

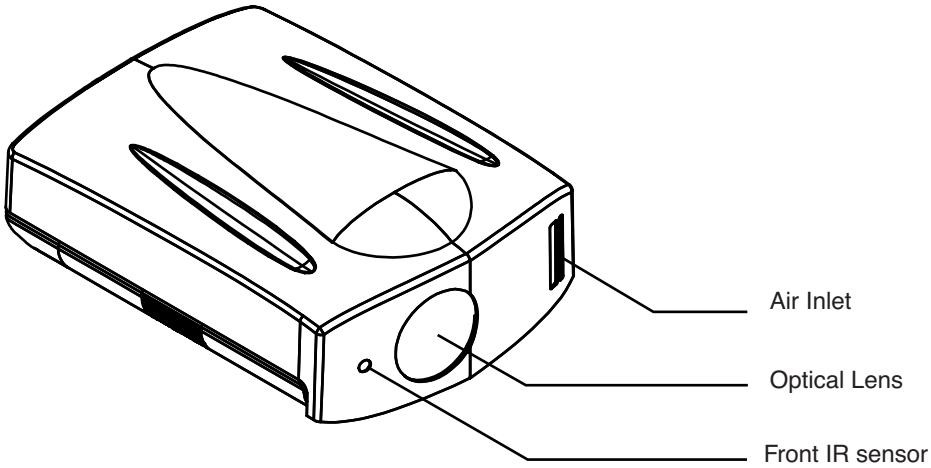

- Air Inlets: see “Air-Flow and Space Requirements”, page 8.

Rear side

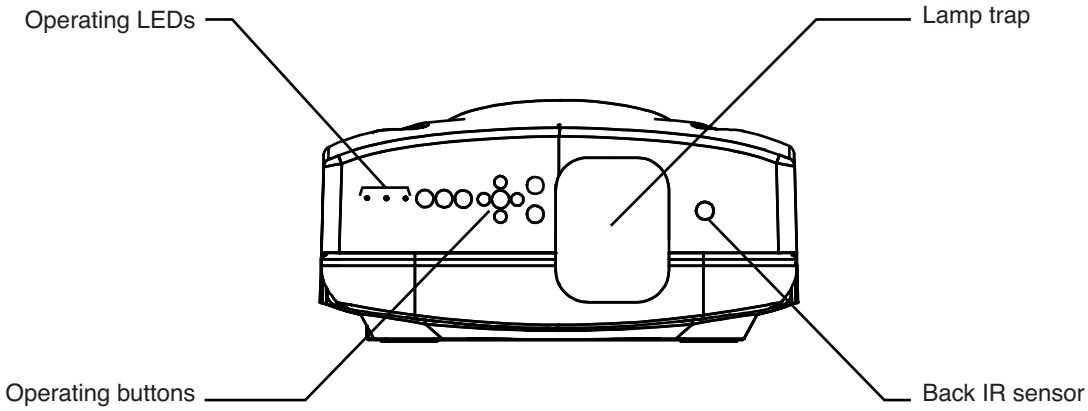

- Operating LEDs: see section 4.3, page 17 for more details.
- Operating and Navigation buttons described in section 4.4, page 18.
- Lamp trap: see “Procedure for Lamp Replacement”, page 34 for more details about lamp replacement.

Input Panel side

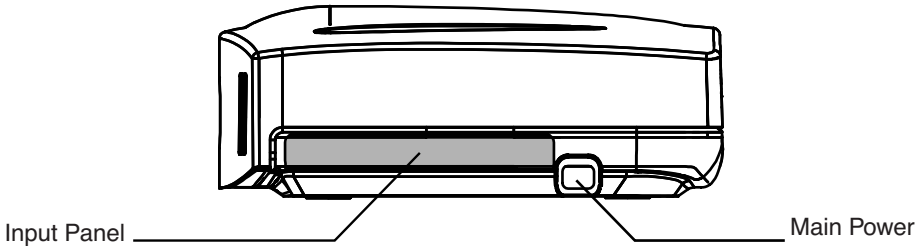

- Main Power: connect the power cord as shown below.
- Input Panel: connect your video source to the correct input.

4.2 Connecting the Power Cord

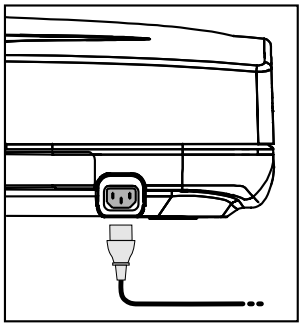

•Before plugging in the Power Cord, ensure that all devices have been connected.

•Connect the power cord to the power input terminal of the projector.

CAUTION AGAINST FIRE AND ELECTRIC SHOCK

Since the power consumption of this unit is high, insert the power plug directly into a wall outlet.
When not using devices, remove the power plug from the wall outlet.
Do not use power cords for connection other than specified.
Do not use a power voltage different from that which is indicated.
Do not cut, tear or modify the power cords. Also, do not place a heavy object on, heat or stretch the power cords as this may cause damage to the cords.
Do not insert or pull plugs with a wet hand.

4.3 Operating LEDs

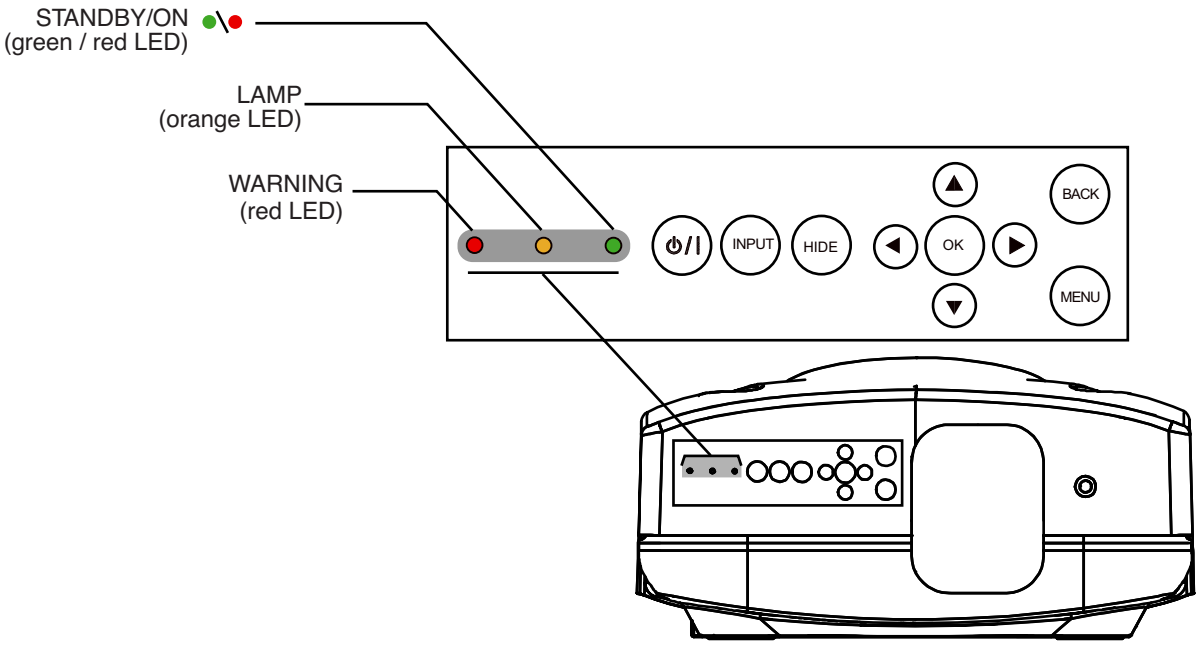

ID	Operating LED				Description
	STANDBY/ON (green or red)	LAMP (orange)	WARNING (red)	Blinking	
1	red	-	-	-	Unit is in standby mode
2	green	-	-	-	Unit is in operate mode (during projection)
3	blinking green	-	-	Yes	Unit is in operate mode, but HIDE is ON. Press again on HIDE button to obtain a picture.
4	blinking red	-	-	Yes	Unit is in cooldown mode. (switching off)
5/6	-	orange	-	-	Lamp time has reached 2900 hours, prepare to replace the lamp before 3000 hours.

CAUTION

When in Cool Down mode, do not pull out the plug from the outlet. Also, do not block the air inlets/exhaust vents by standing the projector on its end or laying it on its side.

4.4 Operating and Navigation Buttons

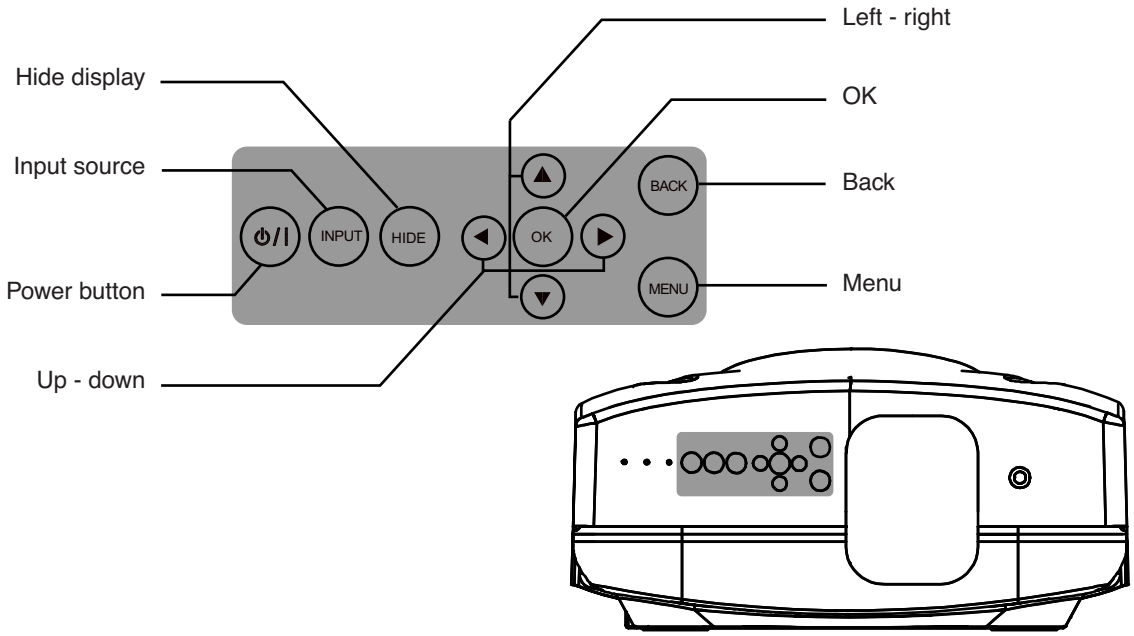

Button	Description
Hide display	To temporary hide the picture.
Input source	To switch input source.
Power button	To turn On or Off the projector.
Up - down - left - right	To navigate into On Screen Display (OSD) Menu.
OK (Enter)	To select or to confirm action.
Back	To return to previous menu or cancel action.
Menu	To display On Screen Display (OSD) Menu.

5.0 CONNECTIONS

This unit can be connected to any compatible devices using the available inputs listed below:

- 2x HDMI revision 1.3 with HDCP
- 1x Video
- 1x S-Video
- 1x Component (YPbPr / RGB / SCART)
- 1x 12 volt Trigger
- 1x RS-232
- 1x PC - VGA (sub D-15) available for StarLight2 only.

The RS-232 terminal port can be used for automation.
For audio output, connect your audio video source to an amplifier.

This unit features a 12 Volt trigger output that can be used to control external device in On/Off mode or together with the optional anamorphic lens systems.

5.1 Connecting a device to the projector

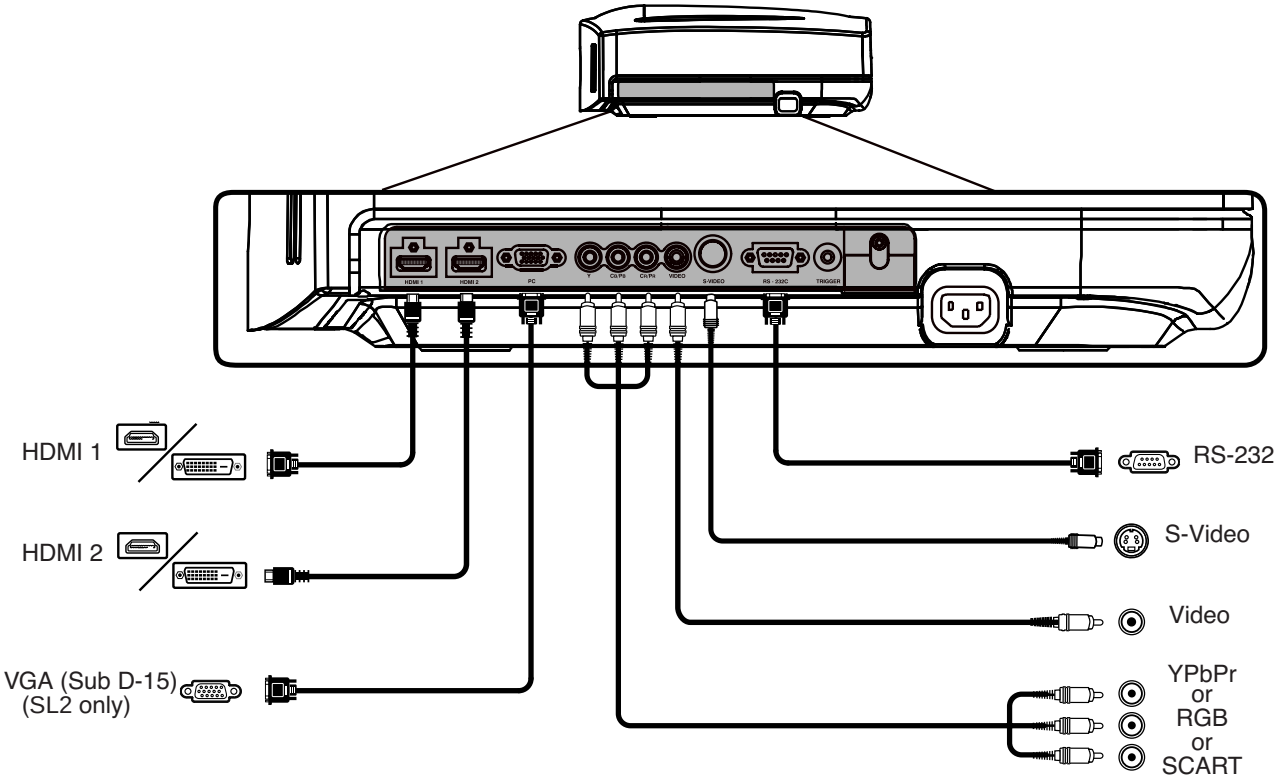

Input	Device
HDMI1, HDMI2	HDMI or DVI-D sources: Blu-Ray Disc player, DVD-player with HDMI, Game Console, Computer with DVI-D output.
VGA (StarLight2 only)	Computer (VGA output), Multimedia box for StarLight2 only.
RS-232 (*)	Automation Device, Control Device or Computer with RS-232*
S-Video	DVD-Player, Game Console, digital camera, video camera
Video	DVD-Player, Computer video, Game Console (SD), digital camera, video camera.
YPbPr or RGB or SCART (EU)	DVD-Player, HDTV Receiver, Game Console (SD or HD), DVB-T receiver, Multimedia box, Analog Camera. In order to use a SCART device* (Europe) on the Component input, you must use cable sold separately and configure it into the projector menu.

Make sure to use a certified HDMI cable, especially when the distance between the different devices are longer than 5 meters. If it is the case, the use of a split system or optical fiber cable is highly recommended.

(*) Using RS-232 with a Computer

The RS-232 Control and Automation may require specific software and tools. See “RS-232 input and IR Codes”, page 37 for more details on RS-232 cabling and protocol.

For input resolution and refresh rates, check the “PC compatible signals”, page 41.

5.2 Connecting a SCART device

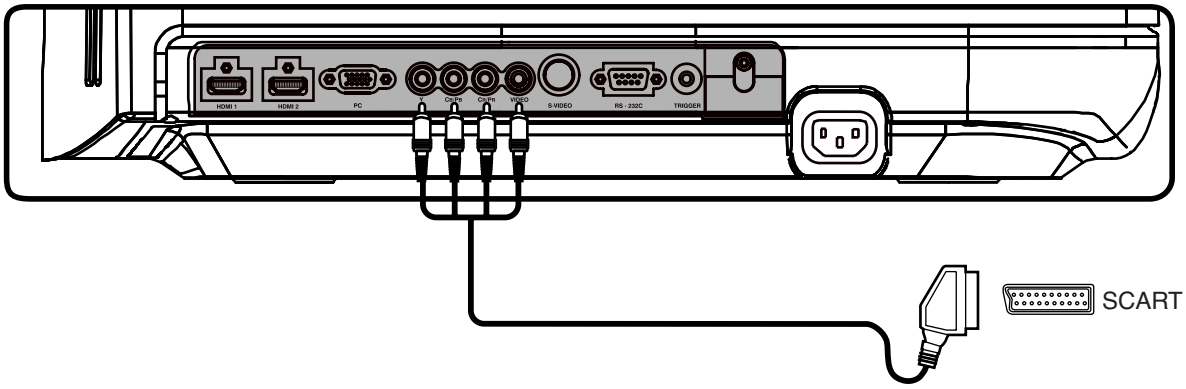

CONNECTING A SCART DEVICE

This unit can be connected to a SCART device using a SCART to RGB+Sync cable. Once connected, select the COMP. input as active input. Then browse into the projector menu to Input Signal > COMP. and select SCART option.

5.3 Caution when connecting a device

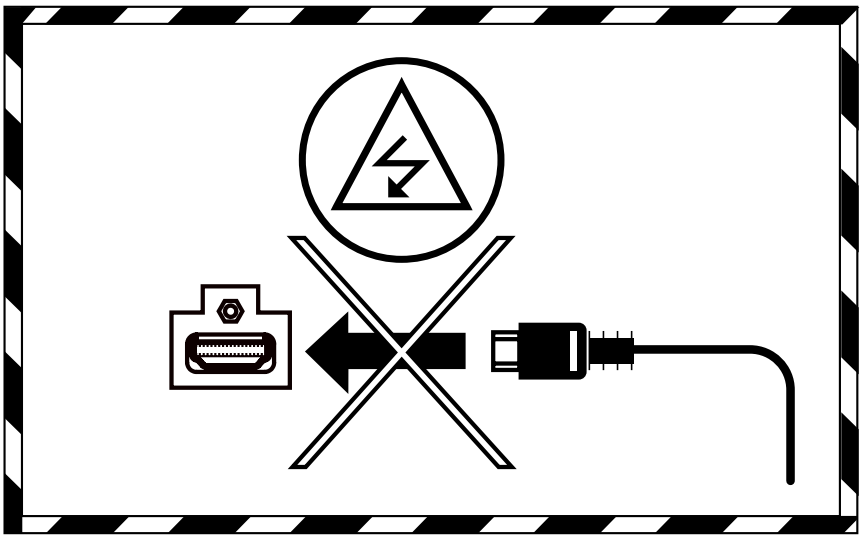

CAUTION !

Prior to connecting any device to this unit, switch the projector in standby mode
Never connect a HDMI source to this unit when the projector is in operate mode. The HDMI termination is a self-powered connection and can cause electric discharges.

6.0 MENU AND PICTURE SETTING

6.1 Menu Structure

MAIN MENU	SUBMENU	AVAILABLE OPTIONS	
Picture Adjust	Picture Mode	(Movies)	Cinema1
		(Vivid HDTV)	Cinema2
		(SF movies or anims)	Cinema3
		(Video programs)	Natural
		(Concerts)	Stage
		(bright lightning)	Dynamic
			User1
			User2
		(StarLight2 only)	TH-PRO
	Contrast		-50 +50
	Brightness		-50 +50
	Color		-50 +50
	Tint		-50 +50
	Color Temp.		5800K
			6500K
			7500K
			9300K
			High Bright
			Custom1
			Custom2
			Custom3
	Gamma		Normal
			A
			B
			C
			D
			Custom1
			Custom2
			Custom3
	Advanced	Sharpness	0 - 100
		Detail Enhancement	-50 +50
		Noise Reduction (SD only):	
		DNR	0 - 16
		MNR	0 - 16
		BNR	On, Off
		CTI (SD only)	Off, Low, Mid, High
		Color Management (StarLight2 only)	Off
			Custom1
			Custom2
			Custom3
		Crystal Motion	Off, Low, High
	Lens Aperture		(R9010097) 1 - 3
			(R9010098) -15 - 0
	Reset Profile		Confirm

Input Signal	HDMI inputs	Input	Auto (16 - 235) Standard (0 - 255) Enhanced
		Color Space	Auto YCbCr(4:4:4) YCbCr(4:2:2) RGB
		Control with HDMI (CEC)	On, Off
	COMP. input	Color Space	YCbCr RGB SCART
	Video / S-Video inputs	NTSC Setup Level	0 IRE 7.5 IRE
		Color System	Auto NTSC NTSC 4.43 PAL PAL-M PAL-N SECAM
	PC input (StarLight2 only)		Auto Alignment Tracking Phase
		Picture position	Hor., Vert.
	Picture Position		Horizontal Vertical
	Aspect (Video only)		4:3 16:9 Zoom
	Aspct (Computer only)		Auto Just Full
	V-stretch		On, Off
	Over Scan (SD only)		(2.5%) On Off
	Mask (HD only)		2.5% 5% Off
	Film Mode (only 480i, 576i, 1080i)		Auto, Film, Off
Installation	Lens Control	Focus	
		Zoom	
		Shift	
		Test Pattern	On, Off
		Lock	On, Off
	Pixel Adjust	horiz. Red	1 - 7
		horiz.Green	1 - 7
		horiz.Blue	1 - 7
		vert. Red	1 - 5
		vert. Green	1 - 5
		vert. Blue	1 - 5
	Installation Style		Front Ceiling Mount (Front) Rear Ceiling Mount (Rear)
	Keystone		Horizontal, Vertical
	Screen Adjust		Off A B C

Display Setup	Back Color	Blue, Black
	Menu Position	select position
	Menu Display	15sec, On
	Line Display (input setting)	5sec, Off
	Source Display (active input)	On, Off
	Logo	On, Off
	Language	Select between 12 languages
Function	Lamp Power	Normal High
	Trigger	Off On (Power) On (Vstretch)
	Test Pattern	Select between 6 Test Patterns
	Off Timer	1 hour, 2 hours, 3 hours, 4 hours
	High Altitude Mode	On, Off
Information	Input Image Connector	
	Input Source name	
	PC Resolution	
	PC H Freq.	
	PC V Freq.	
	Deep Color Depth	
	Lamp use	

6.2 Picture Adjust menu

Picture Mode

Three preset picture modes are available and they can be applied to any input. A picture mode retains the Picture adjustments:

- Cinema1 setting is best suited for general movie watching.
- Cinema2 setting is optimized for vivid based in HDTV standards. Best to be used with animation or vivid movies.
- Cinema3 setting brings a cool tone to the picture. Best used with for sciences fiction movies.
- Natural setting for natural hues and tones. Best for dramas and video.
- Stage setting for live concerts or stage performances.
- Dynamic setting to be used when the room cannot be completely dark.
- TH-PRO (StarLight2 only) setting to obtain a non over-saturated colors in a dark environment. Optimized for movie projection.

Additionally, you can define 2 user modes to finely tune the projector to your video source and the ambient light.

- User1
- User2

Contrast

The contrast function is used to adjust the contrast between the light and dark areas of the displayed image. A correct contrast setting is important for good image reproduction. Adjust the Contrast value between -50 and 50.

Brightness

The brightness function is used to adjust the overall light output. Adjust the Brightness value between -50 and 50.

Color

The Color function (or Saturation) is used to adjust the color saturation levels. Adjust the Color value between -50 and 50.

Tint

The hue function is used to adjust the color tint to obtain true color reproduction. Adjust the Tint value between -50 (more red) and 50 (more green).

Color Temperature

Color temperature stands for the spectral properties of a light source. Low color temperature implies warmer ambiance (more yellow/red) while high color temperature implies a colder light (more blue). This setting can be set to:

- 5800K: warm colors
- 6500K. neutral colors, match current HDTV and Blu-Ray encoding.
- 7500K: brings a bluish tinge to the picture, best suited for night scenes.
- 9300K: cold picture best suited for computer and graphics.
- High Bright: select the brightest output mode available.
- Custom1
- Custom2
- Custom3

A Custom setting allows a fine adjustment of a Color Temperature by selecting in the Correction Value tab 5800K, 6500K, 9300K or High Bright. Adjust the Gain values (bright part) and Offset values (dark part) for each color Red, Green and Blue.

Accurate color temperature may require professional tools such as dedicated software and colormeter. Wait at least 20 minutes after startup before modifying the picture settings.

Gamma

Gamma is the relationship between the color values of the data and the color values displayed. The Gamma coefficient makes it possible to adjust the brightness of the midtones only without affecting the very bright and very dark areas. If gamma is set too high, middle tones appear too dark. If it's set too low, middle tones appear too light. The Gamma correction factor can be set to:

- Normal: Standard tones
- Gamma A: rich dark tones.
- Gamma B: for film and movie projection.
- Gamma C: for film and movie projection with more detailed blacks than setting B.
- Gamma D: this setting is recommended for bright midtones and Computer like projection.
- Custom1
- Custom2
- Custom3

The Custom data can be set to:

- Correction Value: a unique value that will act as a gamma coefficient between 1.8 and 2.6.
- Gamma Adjustment: the gamma curve can be adjusted for each color Red, Green and Blue.
- Copy: copy the adjusted values to temporal memory.
- Paste: paste values stored in memory to current profile.
- Reset: reset to the default 2.2 gamma coefficient.

Gamma Adjustment can be copied from all modes. Paste can only be used for Custom modes.

Advanced

6.2.0.1 Sharpness

The Sharpness function is used to adjust the image sharpness of the picture. Adjust the Sharpness value between 0 (soft) and 100 (sharper).

6.2.0.2 Detail Enhancement

Detail Enhancement function is used to improve the picture quality. You can set it from -50 to 50.

6.2.0.3 Noise Reduction (SD video only)

DNR: Digital Noise Reduction. You can set it from 0 up to 16 to reduce the image noise.

MNR: Mosquito Noise Reduction function is used to reduce the Mosquito noise on the picture, generally found in compressed digital video signals such as television broadcast or encoded movies. Adjust the MNR value from 0 up to 16 to reduce the typical broadcast picture mosquito noise

BNR: Block Noise Reduction uses a large portion of the picture to reduce the digital noise, this ensures a higher quality filter. Adjust the BNR value to On or Off.

6.2.0.4 CTI (SD video only)

Color Transition Improvement. Set it to Off, Low, Middle or High to reduce the color smear (color contour correction). Caution: this function may alter the original picture chrominance.

6.2.0.5 Color Management (TSL adjustments for StarLight2 only)

The Color Management gives the installer an unique calibration ease with the integrated Color Adjustment menu: each primary and secondary color can be independently calibrated to obtain a precise color balance in a snap.

Adjust the Red, Green, Blue, Yellow, Cyan and Magenta Tints, Saturations and Luminances and store them into Custom1, Custom2 or Custom3 profiles.

6.2.0.6 Crystal Motion Drive (120Hz)

The Crystal Motion function uses a 120Hz video processing to render a smooth and clear motion for movies shot at 24Hz or HD movies at 60Hz. Set the correct level between low and high for 1080p24Hz movies or Film mode input to obtain a clear image.

Lens Aperture

The lens is equipped with a variable electronic aperture. This function is used to optically adjust the light output depending on the viewing conditions and the light ambiance. Adjust from the correct aperture from partially closed to fully opened.

Reset

Reset values to their default settings.

6.3 Input Signal menu

HDMI Inputs

This menu is available if the selected active input is HDMI1 or HDMI2.

6.3.0.1 Input

Auto: The input dynamic range is automatically detected and configured.
Standard: Force dynamic range output to 16-235.
Enhanced: Force dynamic range output to 0-255.

6.3.0.2 Color Space

Auto: The source color space is automatically detected and configured.
YCbCr(4:4:4): Set color space to YCbCr 4:4:4.
YCbCr(4:2:2): Set color space to YCbCr 4:2:2.
RGB: Set color space to RGB 4:4:4.

6.3.0.3 Control with HDMI (CEC)

Off: By default the CEC communications are disabled.
On: Enables CEC communications to be sent to the projector through HDMI cable.
CEC: Consumer Electronic Control

Component

This menu is available if the selected active input is Component.

- Y Pb/Cb Pr/Cr: Select this option if the COMP. input is connected to a component video signal.
- RGB: Select this option if the COMP. input is used with a RGB video source.
- SCART: Select this option if the COMP. and VIDEO inputs are used together to receive RGB+Sync signals from a European SCART source.

Video / S-Video

This menu is available if the selected active input is either Video or S-Video.

6.3.0.1 NTSC Setup level

This function can adjust the black level of the signal to 7.5 IRE instead of 0IRE. 7.5 IRE is widely used for NTSC standard.

6.3.0.2 Color System

This function allows a manual selection of the color system to be used between NTSC, NTSC4.43, PAL, PAL-M, PAL-N and SECAM. The default setting is Auto. When Auto is selected, the input format is automatically detected and the correct color system is applied.

PC (StarLight2 only)

This menu is available if the selected active input is PC (Sub-D15) input.

- Auto Alignment: Automatically adjusts Tracking, Phase and Picture Position
- Tracking: Adjust the horizontal size and display area of the picture.
- Phase: Adjust flickering and blurred pictures.
- Picture Position: Adjust the display position of the picture.

Picture Position

Depending on your source, you may find that the picture should be adjusted into the screen, adjust the horizontal and vertical position of the picture into the screen.
Some signals may not be fully displayed, adjust this setting properly when necessary.

Aspect Ratio

When watching a movie or video program, you can manually set the desired aspect ratio to fill your screen. Select the correct aspect ratio depending on your source:

6.3.0.1 For Video sources

- 4:3. The original source is considered as 4:3 format. Generally SDTV broadcasts and entertainments.
- 16:9. The picture size is 16:9, generally most recent DVDs, Blu-Ray discs and HDTV broadcasts.
- Zoom. The zoom function is useful to zoom in the picture and eliminate black bars

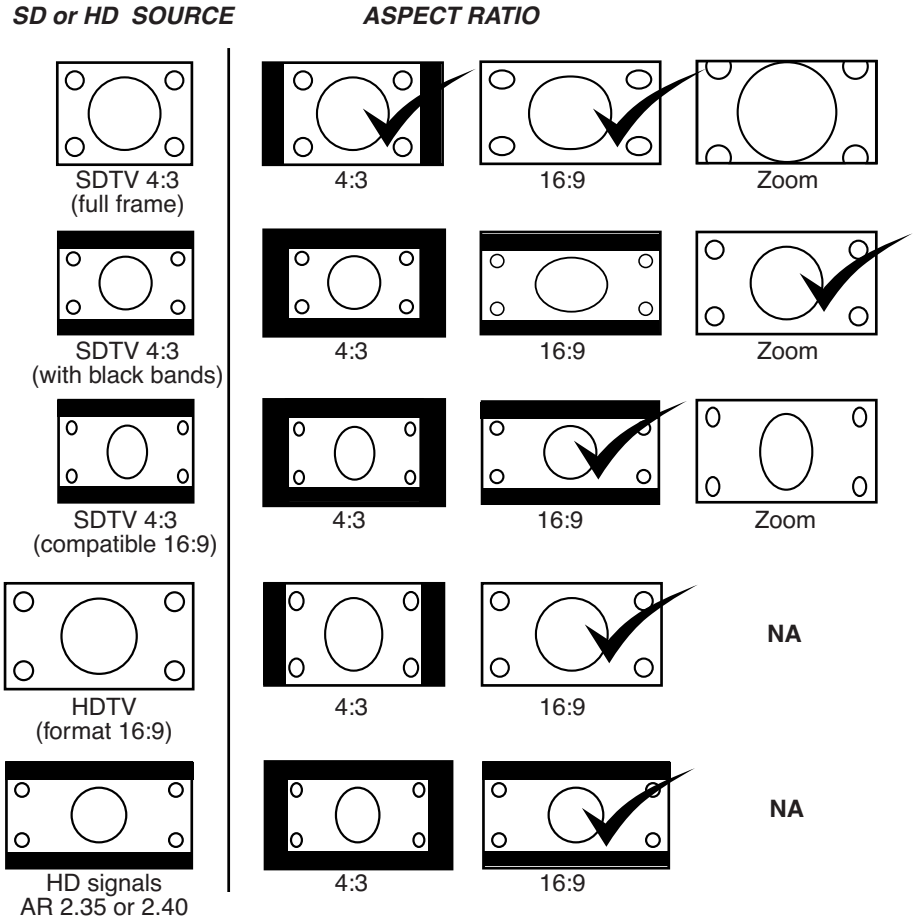

Aspect Ratio applied to different source formats.

6.3.0.2 For PC sources

- Auto. Zoom the picture to fill either the screen height or the screen base which ever happens first.
- Just is a 1:1 mode, pixel to pixel mapping, no scaling.
- Full. Stretch the picture full screen.

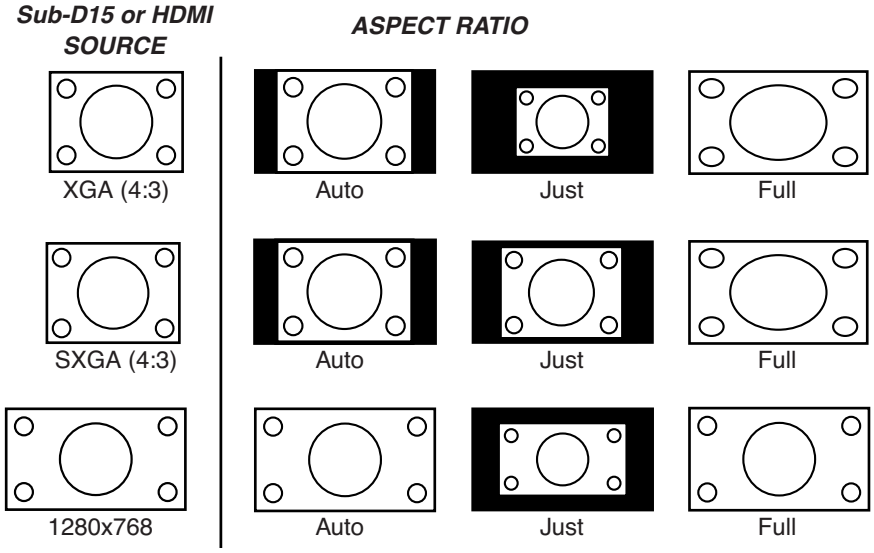

Aspect Ratio applied to PC-signals.

V-Stretch (for Video sources)

- This setting is available only for SD and HD signals. If you enable this function, the original picture is stretched to

fit an installation with anamorphic lens. The picture fills completely the projector panels, using the maximum available resolution for 2.35-2.40 aspect ratio movies.

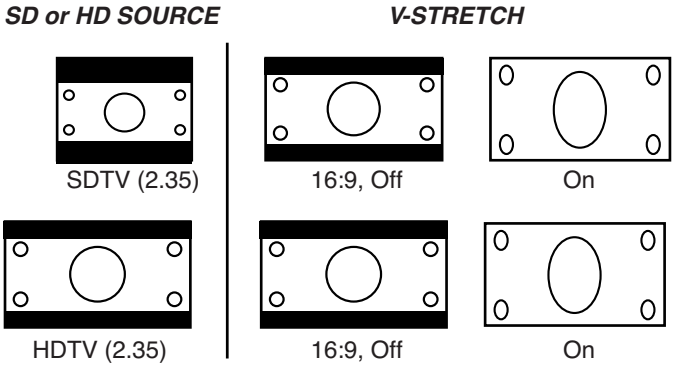

V-Stretch applied to SD and HD sources.

Over Scan (only SD) and Mask (only HD)

The standard definition (SD) signals generally use a frame which is larger than the visible portion of the picture, this is to ensure a larger compatibility with old-fashioned scanning devices such as CRT-televisions. Depending on your source, you may enable or disable this feature to hide the outer area of the picture.
The Mask function available for high definition (HD) signals can hide the unexpected scaling artefacts generally found in HDTV broadcast program. You can set it to Off, 2.5% or 5%.

Film Mode (only 480i, 576i, 1080i)

To provide a better video quality, you can manually set the Film Mode cadence when necessary. Set it from default Auto setting to Film to force the Film Mode or set it to Off to disable it. This function is only available for interlaced input signals: 480i, 576i and 1080i.

6.4 Installation Menu

Lens Control

This menu gives access to the control of the lens. Browse into this menu to adjust:

6.4.0.1 Focus

Adjust the lens focus to obtain a clear picture.

6.4.0.2 Zoom

Adjust the lens zoom to fill the screen with the picture.

6.4.0.3 Shift

Adjust lens shift to center the picture into the screen.

6.4.0.4 Image Pattern

If set to On, an internal pattern will be generated to adjust the current setting. If you want to use an external generator, turn this option to Off.

6.4.0.5 Lock

Once the Lens is correctly set, you may lock this setting menu by turning the Lens control Lock to On. Any attempt to access the Lens control menu will lead to the display of a warning message.

Pixel Adjust

This menu allows a fine adjustment of the red, green and blue panels alignment. Horizontal adjustment moves the selected color to the right, vertical adjustment moves it up.

- Horizontal Red (1 to 7)
- Horizontal Green (1 to 7)
- Horizontal Blue (1 to 7)
- Vertical Red (1 to 5)
- Vertical Green (1 to 5)

- Vertical Blue (1 to 5)

Installation Style

Flip the image to the left or right, up or down according to the projection state of the projector:
Front, Ceiling Mount (F), Rear or RearCeiling mount (R)

Keystone

Compensate for trapezoidal distortion caused by installation. Independently to the screen orientation, make sure that the projector is not tilt more than 5% left/right and 15% up/down.

Screen Adjust

This setting corrects the color balance derived from the reflective characteristics of the screen without altering the global picture settings. You may select:

- Off: No modification
- Mode A: slightly reddish
- Mode B: slightly greenish
- Mode C: slightly bluish

6.5 Display Setup Menu

Back Color

Configures the screen color displayed when there is no active input. Set to Blue or Black.

Menu Position

Upper left, Upper right, Center, Lower right, Lower left.

Menu Display

15sec: Display menu for 15 seconds before fade out.
On: Always display menu.

Line Display

5sec: Display the input settings for 5 seconds after input selection.
Off: Don't display

Source Display

On: Display the source of the input signals after input. selection
Off: Don't display.

Logo

On: Display logo during startup for 5 seconds.
Off: Don't display.

Language

Choose the OSD language between: English, Japanese, German, Spanish, Italian, French, Portuguese, Dutch, Swedish, Norvegian, Russian and Chinese.

6.6 Function Menu

Lamp Power

The Lamp Output function is used to configure the light output of the lamp. Select Normal to set the lamp to 150W or High, 200W. To avoid any damage to the lamp, you can't changed the lamp power within 90 seconds from the projector startup or 60 seconds after lamp power change.

Trigger

The 12V trigger output can be used to control any 12V remoted compatible devices such as motorized screens or anamorphic kits: The 12V trigger output is 12Vcc, 100mA. Select the trigger output behavior:

- Off: 12V trigger voltage state is always low.
- On (power):12V trigger state is high when the projector is powered ON.
- On(V-Stretch): 12V trigger is high only when V-Stretch is active. To be used with Anamorphic kits or 2.35 motorized screen.

Test Pattern

Display 6 types of test patterns. For checking the color condition and tone, and the pixels size. Use whenever necessary.

Off-Timer

You can configure this automatic power Off function that will switch off the projector when there is no operation and no signal.
Choose the duration of the timer between: Off, 1 hour, 2 hours, 3 hours and 4 hours.

High Altitude Mode

Select this when the projector is in a location of low atmospheric pressure.
On or Off

6.7 Information Menu

Input Source

Displays the active video input.

Source

Displays the type of the current video input signal. If PC input is selected, this item cannot be displayed.

Resolution

If the active input is PC input., its resolution is displayed.

H. Frequency

In the case of PC signal, the horizontal frequency is displayed.

V. Frequency

In the case of PC signal, the vertical frequency is displayed.

Deep Color

Display the bit depth (color depth) of the video signals input from the HDMI terminals. Deep Color is not displayed for YCbCr 4:2:2 signals.

Lamp Time

Displays the accumulated hours of usage of the lamp.

6.8 Expert Calibration

Expert Calibration is accessed using RS-232 or programmable IR-RCU. You can set a Calibration Profile

7.0 ANAMORPHIC LENS

7.1 Optional CineWide and 2.35 THEATRE System

The Starlight centralizes the controls and automation commands for both the CineWide and the 2.35 THEATRE System for a unique, versatile and unexpectedly simple to operate 2.35:1 theatre experience using an Anamorphic Lens.

- Integrated Constant Image Width scaler.
- Dedicated menu to program the 12V Trigger output.

7.2 Using the Remote Control Unit.

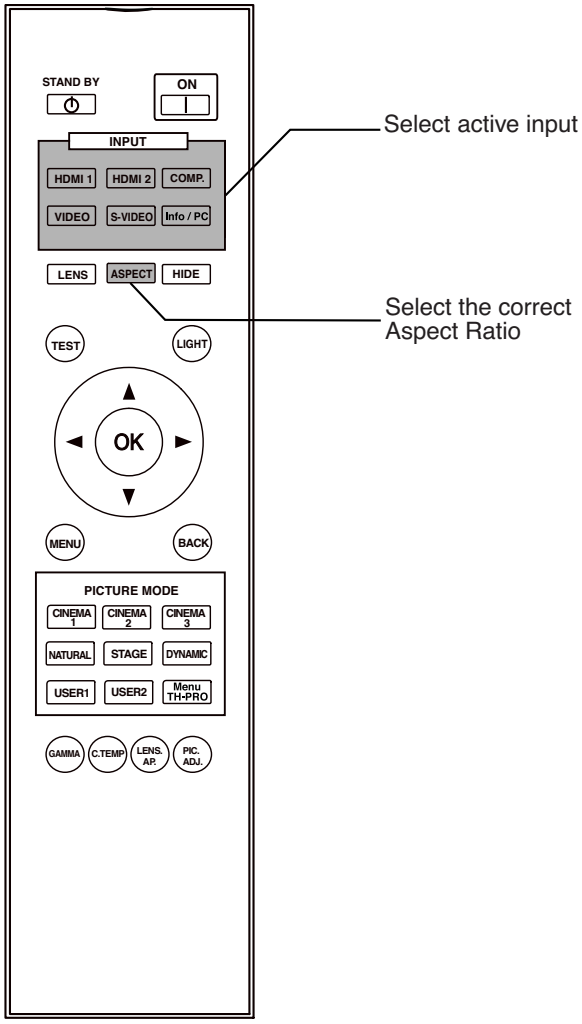

Starlight RCU and quick access to THEATRE Mode features

[ASPECT] ratio button

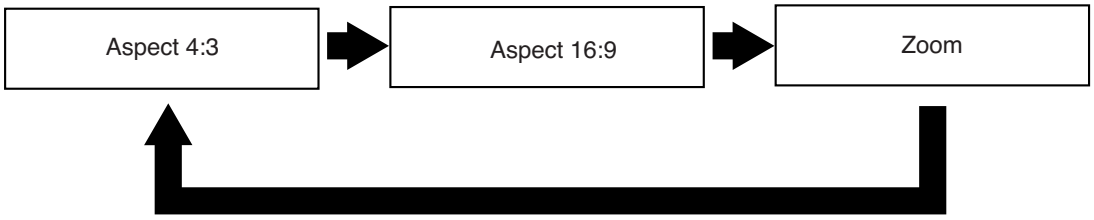

When you press sequentially the [ASPECT] button, the aspect mode rotation is 4:3, 16:9, Zoom then back to 4:3.

7.3 CineWide and CineWide PRO options

Select a 16:9 input: Aspect Ratio to “4:3”

When you select a 16:9 input, choose the “4:3” aspect mode to obtain a geometrically correct picture in your screen.

- Select “4:3” for this input into the menu “Input Signal ⇒ Aspect Ratio ⇒ “4:3””.

Cinemascope input: set “V-Stretch -> On”

When selecting a widescreen input (2.35:1, 2.37:1 or 2.40:1), the original aspect ratio of the source is larger than 16:9, you can see black bars on the top and the bottom of the screen.

- Select “V-Stretch -> On” for this input into the menu “Input Signal ⇒ Aspect Ratio ⇒ “V-Stretch -> On””.

Quick Aspect Ratio changes on the same input

To obtain the correct aspect ratios, choose between “V-Stretch -> On” for widescreen movies (format 2.35:1) and aspect ratio for HDTV (native format 16:9).
You can also use the Remote Control Unit by pressing the [ASPECT] button to switch between “V-Stretch -> On” to “4:3” as described below
To switch forth and backward, press twice the [ASPECT] button on the RCU as described below.

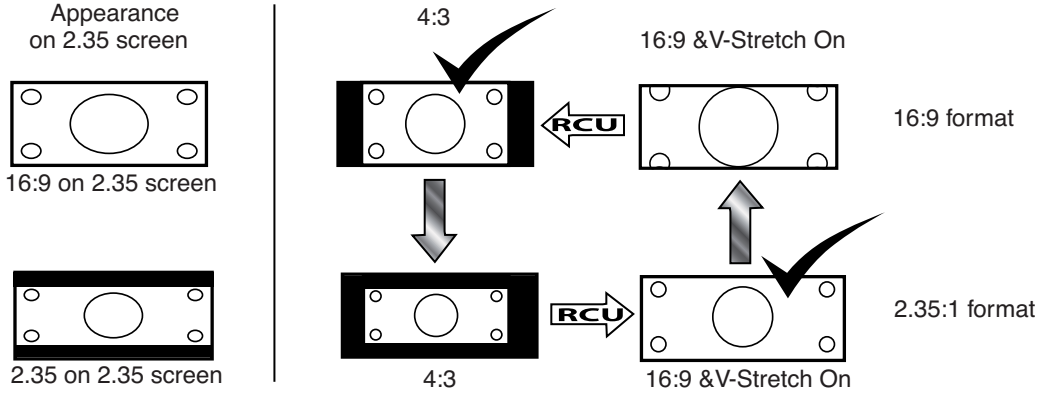

When the source automatically switches format...

... press [ASPECT] button to select 4:3 Mode or 16:9 AR and change V-Stretch value.

7.4 2.35 THEATER System

Plug the RF-Emitter to the Trigger output of the projector

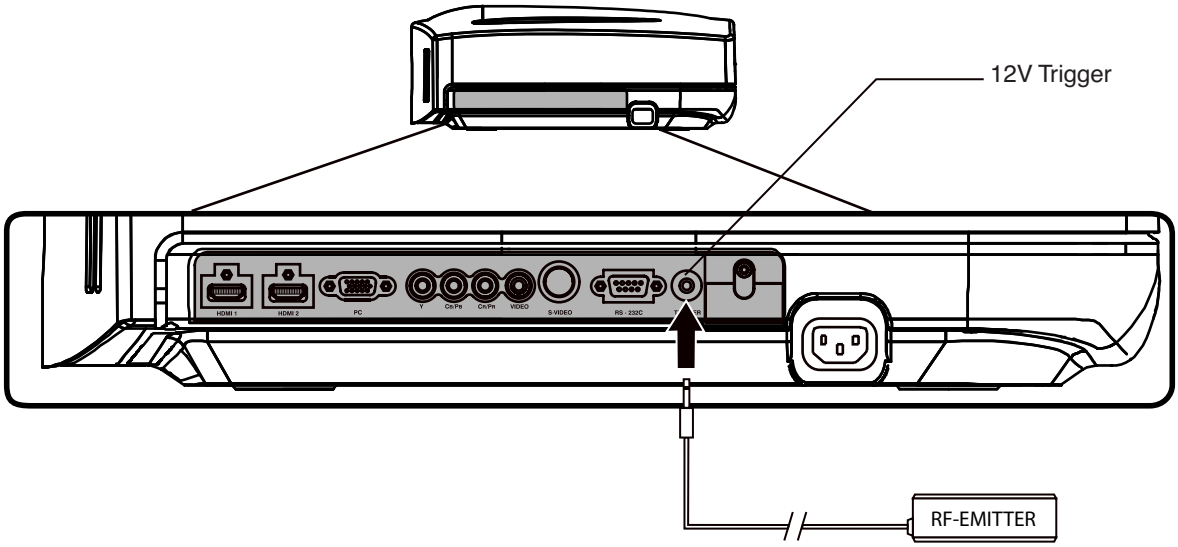

Connect the RF-Emitter provided with the 2.35 THEATER System to the 12V Trigger output

Configure Function Menu ⇒ Trigger to “On (V-Stretch)”

The “Function ⇒ Trigger” menu determines the 12V Trigger output located in the panel input of the Starlight this is a global parameter (for all inputs):

- OFF: the 12V Trigger is always switched Off.
- ON (Power): the 12V Trigger is switched On when the projector is running, Off if the projector is in standby Mode.
- ON (V-Stretch): the Trigger is Off when the V-Stretch value is Off. It switches to On when the V-Stretch value is changed to On.

Anamorphic input: “V-Stretch -> On”

When selecting a widescreen input (2.35:1, 2.37:1 or 2.40:1), the original aspect ratio of the source is larger than 16:9, you can see black bars on the top and the bottom of the screen.

- Select “V-Stretch -> On” for this input in the menu Input Signal ⇒ “V-Stretch -> On”.

The Anamorphic Lens is automatically placed in front of the projector to restore the correct picture aspect ratio.

Quick Aspect Ratio changes on the same input

If the Trigger setting is set to THEATRE Mode, the 2.35 THEATER System is automatically operated by changing the “V-Stretch -> On” or Off.

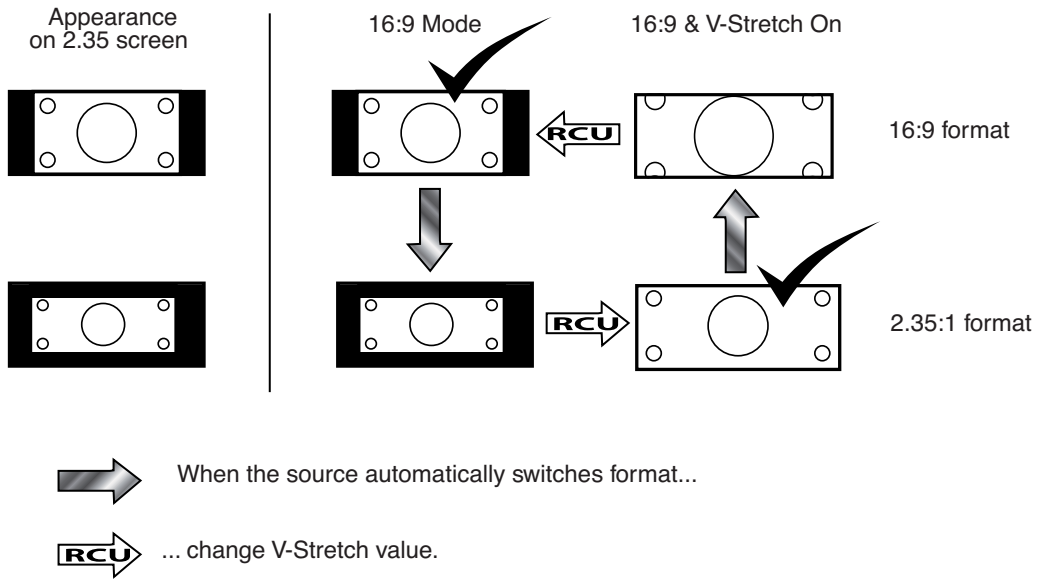

8.0 MAINTENANCE

8.1 Clean Dirt on the Cabinet

Always use a soft cloth. In case of heavy soiling, soak a cloth in neutral detergent diluted with water, wring dry and wipe, followed by wiping again using a dry cloth.

Caution

Pay attention to the following as the cabinet may deteriorate in condition, get damaged or paint may come off.

- Do not wipe with a stiff cloth.
- Do not wipe with force.
- Do not wipe with thinner or benzene.
- Do not spray volatile chemicals like insecticide.
- Do not allow prolonged contact with rubber or plastic products.

8.2 Dirt on the Lens

The lens shall be cleaned using commercial blowers or lens cleaning papers (for cleaning glasses and cameras). Do not use fluid-type cleaning agents. This may lead to peeling of the surface coating film. The lens surface is fragile. Avoid rubbing it hard or knocking.

8.3 Replacing the Lamp

Light-source Lamp and Lamp Usage Time

The life of light-source lamps used for this unit is about 3000 hours.

- The lamp life of 3000 hours is merely the average life span of light-source lamps and we do not provide any guarantee for this figure. The lamp life may not reach 3000 hours depending on the operating conditions.
  Deterioration progresses rapidly when the remaining lamp usage time is short. Get ready or replace with a new lamp when the accumulated usage time exceeds 2900 hours. Depending on the operating conditions, the lamp may have to be exchanged earlier.
  If the image is dark or color tone abnormal, replace the lamp as soon as possible.
- You can also check the accumulated hours of usage. Please refer to Lamp Time in the Information menu.

When the lamp usage time reaches 2900 hours

The Lamp replacement message will be displayed on the screen the next three projection starts.

- Press the [BACK] button to clear the display.

ABOUT LAMP REPLACEMENT

If this unit is installed in a constricted place, attempting to replace the lamp in that place may cause injury. Move this unit to a place large enough to perform work.
Use only genuine replacement parts for the lamp unit. Otherwise, malfunction may occur. Also, never attempt to re-use an old lamp unit. This may cause marked performance deterioration or lamp blowout, thus leading to unit malfunction. Broken pieces of the lamp outside this unit may also cause injuries during lamp unit exchange.
Do not replace the lamp immediately after this unit has been used. The temperature of the lamp is still high and this may cause a burn. Allow a cooling period of 1 hour or more before replacement.
Before replacing the lamp unit, pull out the power plug from the outlet and wait until the STANDBY/ON led is still light red. Replacing a lamp with the plug connected to the outlet may cause injuries or electric shocks.

Procedure for Lamp Replacement

During the lamp replacement process, you may have access to sensitive parts of the projector.

- Loosen the 2 screws on the lamp trap.
- Open the lamp Cover, at the rear of the projector.
- Loosen the 2 screws on the lamp unit to release it.
- Pull out the lamp unit using the handle.
- Insert the new lamp unit until it is firmly in place.

- Tighten the screws of the lamp unit.
- Attach the lamp cover and fasten the two lamp trap screws.

Resetting Lamp Time

After installing a new lamp, reset the lamp time into the OSD menu.

a) Insert plug into the power outlet

b) When the projector is in standby mode (red STANDBY/ON led), use the remote control and press sequentially the [BACK] - [OK] - [HIDE] within 1 second interval then [DOWN] for at least 2 seconds.

c) The sequence is successful if the STANDBY/ON and LAMP leds blink alternately for 3 seconds.

TO ENSURE THE LAMP TIME HAS BEEN RESET

The lamp time can be checked via the Lamp hours item of the Information menu.

CAUTION DURING RESET WORK

Reset the lamp time only when you have replaced the lamp.
Never reset it when the lamp is still in use. Otherwise, the approximate standard for gauging replacement time may be inaccurate, lamp performance may deteriorate and lamp blowout may occur.

8.4 Cleaning and Replacing the Dust Filters

The filters must be cleaned regularly to allow an efficient air intake. Otherwise, dirt may enter the unit and appear on the screen, preventing you from enjoying the video fully. If dirt has entered the unit or if you need information about the filter, please consult your authorized dealer. A filter cleaning warning appears every 500 hours.

Pull out the plug from the power outlet

Pull out the power plug from the outlet while the projector is in standby mode.

Remove the filters

Push up and lift the claw of the filters, pull out the filters.

Clean the filters

Clean the filters with water and dry them, avoiding direct sunlight. In extremely soiled cases, use of a neutral detergent is recommended.

Reinstall the filters

Insert the filters in their original positions and make sure that the claws are firmly inserted.

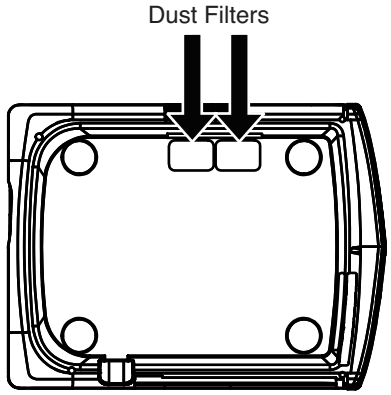

Clean the Dust Filters every 500 hours.

8.5 Troubleshooting

Warning Led

ID#	Operating LED				Description
	STANDBY / ON	LAMP orange LED	WARNING red LED	Blinking	
1	red	-	-	-	Unit is in standby mode
2	green	-	-	-	Unit is in operate mode (during projection)
3	blinking green	-	-	Yes	Unit is in operate mode, but HIDE is ON. Press again on HIDE button to obtain a picture.
4	blinking red	-	-	Yes	Unit is in cooldown mode. (switching off)
5/6	-	orange	-	-	Lamp time has reached 2900 hours and/or prepare to replace the lamp before 3000 hours.
7	-	blinking orange	red	1 time	The lamp failed to ignite, restart the projector after a complete cooldown cycle.
8				2 times	Lamp has shut down during projection, restart the projector after a complete cooldown cycle.
9				3 times	Lamp cover is open. Check that the lamp cover is firmly closed and restart the projector.
10	-	-	blinking red	1 time	Power Supply failed.
11				2 times	Cooling fans stop.
12				3 times	Internal thermal sensor detects overheating.
13				4 times	External thermal sensor detects overheating.
14	-	blinking orange		1 time	Startup or drive circuits failed
15				2 times	Communication with drive circuit failed.
16				3 times	Scaler circuit failed

About Warnings and Cool-Down Mode

After projection or when a warning occurred (cases 7-16), the unit will go through a 1 minute cool-down process known as the Cool Down mode. This function is to prevent lamp breakage and shortened lamp life but also damage to the internal components of the projector.
The Cool Down mode is indicated by the blinking red STANDBY/ON led. When in Cool Down mode, the projector cannot be turned ON.
After the Cool Down process is completed, the unit will automatically switch to the Standby mode indicated by a red STANDBY/ON led.

Caution

When in Cool Down mode, do not pull out the plug from the outlet. Also, do not block the air inlets/exhaust vents by standing the projector on its end or laying it on its side.

9.0 MISCELLANEOUS

9.1 RS-232 input and IR Codes

Communication Specifications

Control of this unit is possible using a computer or automation device connected with a RS-232 cross cable (female - female D-sub 9 pins cable). Communication specifications for this unit are as follows:

Baud Rate	19200 bps
Data Format	Binary
Mode	Non-Synchronous
Character Length	8 bits
Parity	None
Start Bit	1 bit set to high
Stop Bit	1 bit set to low
X on/off	None
Flow Control	None

Pin assignation

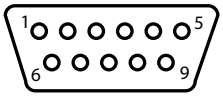

Pin	Signal	Function	Signal Direction
2	RxD	data	PC -> Projector
3	TxD	data	Projector-> PC
5	GND	ground	-
1,4,6-9	N/C	-	-

Command Format

When sending a command to this unit, use the following data format:

Header	Unit ID	Command	Data	EoD
1 byte	89h 01h	2 bytes	at least 1 byte	0Ah

Header	(21h): Operating command. PC -> Projector (3Fh): Reference command. PC -> Projector (40h): Response command. Projector -> PC (06h): ACK. Projector -> PC
Unit ID	Fixed to (89 h 01h)
Command	2 bytes. See the list of the available commands below. If Command code is “52h 43h”, the Data sent may also be sent to the projector by a programmable RCU using NEC 5 protocole.
Data	1 byte. See the list of the available data for each command below.
EoD	Fixed to (0Ah)

Available Operating commands

Header (21h)	Command	Data	Description
Connection RS-232	00h 00h	none	Check the serial connection.
Power ON	50h 57h	31h	If the projector is in stand-by mode, this command switch the unit ON.
Power OFF	50h 57h	30h	If the projector is powered ON, this command switches this unit into Stand-by Mode.

Switch Input	49h 50h	30h	Switch active input to S-Video
		31h	Switch active input to Video
		32h	Switch active input to Component
		33h	Switch active input to VGA (StarLight2 only)
		36h	Switch active input to HDMI 1
		37h	Switch active input to HDMI 2
		2Bh	Switch to next input
		2Dh	Switch to previous input
Test Pattern	54h 53h	30h	Test Patterns Off.
		31h	Colour bars
		36h	Stair Step (black & white)
		37h	Stair Step (red)
		38h	Stair Step (green)
		39h	Stair Step (blue)
		41h	Crosshatch (green)
Gamma	47h 54h	30h	Set Gamma to Normal
		31h	Set Gamma to A
		32h	Set Gamma to B
		33h	Set Gamma to C
		34h	Set Gamma to Custom1
		35h	Set Gamma to Custom2
		36h	Set Gamma to Custom3
		37h	Set Gamma to D
Gamma Value (Gamma set to Custom1-3)	47h 50h	30h	Set value to 1.8
		31h	Set value to 1.9
		32h	Set value to 2.0
		33h	Set value to 2.1
		34h	Set value to 2.2
		35h	Set value to 2.3
		36h	Set value to 2.4
		37h	Set value to 2.5
		38h	Set value to 2.6

RCU Commands and sending them through RS-232

Header (21h)	Command	Data	Description
Power ON	52h 43h	37h 33h 30h 35h	Switch the unit ON.
Power OFF	52h 43h	37h 33h 30h 36h	Switch this unit into Stand-by mode.
Switch input	52h 43h	37h 33h 30h 38h	Switch to next input
		37h 33h 34h 36h	Switch active input to VGA (StarLight2 only).
		37h 33h 34h 42h	Switch active input to Video
		37h 33h 34h 43h	Switch active input to S-Video
		37h 33h 34h 44h	Switch active input to Component
		37h 33h 37h 30h	Switch active input to HDMI 1
		37h 33h 37h 31h	Switch active input to HDMI 2
Keypad	52h 43h	37h 33h 30h 31h	UP
		37h 33h 30h 32h	DOWN
		37h 33h 30h 33h	EXIT
		37h 33h 32h 45h	MENU
		37h 33h 32h 46h	OK
		37h 33h 33h 34h	RIGHT
		37h 33h 33h 36h	LEFT
Hide Display	52h 43h	37h 33h 31h 44h	Hide the projected picture at the screen.
OSD Position	52h 43h	37h 33h 34h 32h	Menu Position: Toggle the OSD position.
Test Pattern	52h 43h	37h 33h 35h 39h	Switch Test Patterns on the screen.

Picture Mode	52h 43h	37h 33h 36h 34h	Day profile (StarLight2 only, require Expert Cal. ON)
		37h 33h 36h 35h	Night profile (StarLight2 only, require Expert Cal. ON)
		37h 33h 36h 36h	Cinema 3
		37h 33h 36h 37h	Stage
		37h 33h 36h 38h	Cinema 2
		37h 33h 36h 39h	Cinema 1
		37h 33h 36h 41h	Natural
		37h 33h 36h 42h	Dynamic
		37h 33h 36h 43h	User 1
		37h 33h 36h 44h	User 2
		37h 33h 36h 46h	TH-PRO (StarLight2 only)
Picture Adjust	52h 43h	37h 33h 37h 32h	Toggle Picture Adj. menu.
Gamma	52h 43h	37h 33h 37h 35h	Toggle Gamma function menu.
		37h 33h 33h 38h	Set Gamma to Normal
		37h 33h 33h 39h	Set Gamma to A
		37h 33h 33h 41h	Set Gamma to B
		37h 33h 33h 42h	Set Gamma to C
		37h 33h 33h 43h	Set Gamma to Custom1
		37h 33h 33h 44h	Set Gamma to Custom2
		37h 33h 33h 45h	Set Gamma to Custom3
		37h 33h 33h 46h	Set Gamma to D
Color Temperature	52h 43h	37h 33h 37h 36h	Toggle Color temperature.
		37h 33h 34h 45h	Set Color Temperature to 5800K.
		37h 33h 34h 46h	Set Color Temperature to 6500K.
		37h 33h 35h 30h	Set Color Temperature to 7500K.
		37h 33h 35h 31h	Set Color Temperature to 9300K.
		37h 33h 35h 32h	Set Color Temperature to High Bright.
		37h 33h 35h 33h	Set Color Temperature to Custom1.
		37h 33h 35h 34h	Set Color Temperature to Custom2.
		37h 33h 35h 35h	Set Color Temperature to Custom3.
Color Management (StarLight2 only)	52h 43h	37h 33h 36h 30h	Set Color Management to Off.
		37h 33h 36h 31h	Set Color Management to Custom1.
		37h 33h 36h 32h	Set Color Management to Custom2.
		37h 33h 36h 33h	Set Color Management to Custom3.
Expert Calibration (StarLight2 only)	52h 43h	37h 33h 35h 38h	Switch to Adjust Mode.
		37h 33h 35h 39h	Switch to Test Mode.
		37h 33h 35h 41h	Switch Expert Calibration to Off.
		37h 33h 35h 42h	Switch Expert Calibration to On.
Aspect Ratio	52h 43h	37h 33h 37h 37h	Toggle Aspect Ratio.
		37h 33h 32h 35h	Set Aspect Ratio to 4:3
		37h 33h 32h 36h	Set Aspect Ratio to 16:9
		37h 33h 32h 37h	Set Aspect Ratio to Zoom.
Contrast	52h 43h	37h 33h 37h 38h	Contrast +
		37h 33h 37h 39h	Contrast -
Brightness	52h 43h	37h 33h 37h 41h	Brightness +
		37h 33h 37h 42h	Brightness -
Color	52h 43h	37h 33h 37h 43h	Color +
		37h 33h 37h 44h	Color -
Sharpness	52h 43h	37h 33h 37h 45h	Sharpness +
		37h 33h 37h 46h	Sharpness -
V-Stretch	52h 43h	37h 33h 32h 33h	Turn ON the V-Stretch function.
		37h 33h 32h 34h	Turn OFF the V-Stretch function.

Lens Aperture	52h 43h	37h 33h 32h 30h	Toggle the Lens Aperture setting menu.
		37h 33h 32h 38h	Set Lens Aperture to setting “1”
		37h 33h 32h 39h	Set Lens Aperture to settign “2”
		37h 33h 32h 40h	Set Lens Aperture to setting “3”
Lens Aperture +	52h 43h	37h 33h 31h 45h	Increase the Lens Aperture value
Lens Aperture -	52h 43h	37h 33h 31h 46h	Decrease the Lens Aperture value
V-Stretch	52h 43h	37h 33h 32h 33h	Turn ON the V-Stretch function.
		37h 33h 32h 34h	Turn OFF the V-Stretch function.

Lens Control

Header (21h)	Command	Data	Description
Lens Menu	52h 43h	37h 33h 33h 30h	Lens Menu: Toggle the Lens Menu.
Lens Shift Up	52h 43h	37h 33h 32h 31h	Shift the picture upward using lens shift.
Lens Shift Down	52h 43h	37h 33h 32h 32h	Shift the picture downard using lens shift.
Lens Shift Right	52h 43h	37h 33h 34h 33h	Shift the picture to the right using lens shift.
Lens Shift Left	52h 43h	37h 33h 34h 34h	Shift the picture to the left using the lens shift.
Lens Focus +	52h 43h	37h 33h 33h 31h	Focus far.
Lens Focus -	52h 43h	37h 33h 33h 32h	Focus near
Lens Zoom T	52h 43h	37h 33h 33h 35h	Zoom Tele
Lens Zoom W	52h 43h	37h 33h 33h 37h	Zoom Wide

Examples

You want to...	Command to send
Check the connection	send: 21h 89h 01h 00h 00h 0Ah receive: 06h 89h 01h 00h 00h 0A
Switch the projector ON	send: 21h 89h 01h 50h 57h 31h 0Ah receive: 06h 89h 01h 50h 57h 0Ah
Switch the projector OFF	send: 21h 89h 01h 50h 57h 30h 0Ah receive: 06h 89h 01h 50h 57h 0Ah
Switch the projector OFF with OSD confirmation	send: 21h 89h 01h 52h 43h 37h 33h 30h 36h 0Ah receive: 06h 89h 01h 52h 43h 0Ah
Change Active Input to Comp.	send: 21h 89h 01h 49h 50h 32h 0Ah or send: 21h 89h 01h 52h 43h 37h 33h 34h 44h 0Ah
Display On Screen Menu	send: 21h 89h 01h 52h 43h 37h 33h 32h 45h 0Ah receive: 06h 89h 01h 52h 43h 0Ah

Available Reference and Response commands

A reference command ask the projector about its status. The projector send back an ACK command together with a Response command.

Header	Command	Description	Response Data
Power status (header 3Fh)	50h 57h	Check the Power status.	30h: Standby
			31h: Power On
			32h: Cool Down
			34h: Warning
Active Input (header 3Fh)	49h 50h	Check which input is active.	30h: S-video
			31h: Video
			32h: Component
			33h: VGA
			36h: HDMI 1
			37h: HDMI 2

Gamma Table (header 3Fh)	47h 54h	Check the current Gamma table	30h: Normal
			31h: A
			32h: B
			33h: C
			34h: Custom1
			35h: Custom2
			36h: Custom3
Gamma Value (header 3Fh)	47h 50h	Check the current Gamma value	30h: 1.8
			31h: 1.9
			32h: 2.0
			33h: 2.1
			34h: 2.2
			35h: 2.3
			36h: 2.4
			37h: 2.5
			38h: 2.6

Examples

You want to...	Command to send
Check if the projector is switched ON	send: 3Fh 89h 01h 50h 57h 0Ah receive: 06h 89h 01h 50h 57h 0Ah (confirm cmd) receive: 40h 89h 01h 50h 57h 31h 0Ah (projector is ON)
Which input is active	send: 3Fh 89h 01h 49h 50h 0Ah receive: 06h 89h 01h 49h 50h 0Ah (confirm cmd) receive: 40h 89h 01h 49h 50h 36h 0Ah (HDMI 1 is active)

9.2 PC compatible signals

On HDMI Inputs

Designation	Resolution	fh (kHz)	fv (Hz)	Dot (MHz)	Polarity	Total dots x lines
VGA 60	640 x 480	31.500	60.000	25.200	H- V-	800 x 525
VGA 59.94	640 x 480	31.469	59.940	25.175	H- V-	800 x 525
SVGA 60	800 x 600	37.879	60.317	40.000	H+ V+	1056 x 628
XGA 60	1024 x 768	48.363	60.004	65.000	H- V-	1344 x 806
WXGA 60	1280 x 768	47.760	60.000	79.998	H- V+	1675 x 796
WXGA+ 60	1440 x 900	55.919	59.999	106.470	H- V+	1904 x 932
SXGA 60	1280 x 1024	63.981	60.020	108.000	H+ V+	1688 x 1066
WSXGA+ 60	1680 x 1050	65.222	60.002	147.140	H- V+	2256 x 1087
WUXGA 60	1920 x 1200	74.038	59.950	154.000	H+ V-	2080 x 1235

On Sub-D15 (VGA) input

Designation	Resolution	fh (kHz)	fv (Hz)	Dot (MHz)	Polarity	Total dots x lines
VGA 60	640 x 480	31.500	60.000	25.175	H- V-	800 x 525
VGA 72	640 x 480	37.900	72.000	31.500	H- V-	832 x 520
VGA 75	640 x 480	37.500	75.000	31.500	H- V-	840 x 500
VGA 85	640 x 480	43.300	85.000	36.000	H- V-	832 x 509
SVGA 60	800 x 600	37.900	60.000	40.000	H+ V+	1056 x 628
SVGA 72	800 x 600	48.100	72.000	50.000	H+ V+	1040 x 666
SVGA 75	800 x 600	46.900	75.000	49.500	H+ V+	1056 x 625
SVGA 85	800 x 600	53.700	85.000	56.250	H+ V+	1048 x 631
XGA 60	1024 x 768	48.400	60.000	65.000	H- V-	1344 x 806
XGA 70	1024 x 768	56.500	70.000	75.000	H- V-	1328 x 806
XGA 75	1024 x 768	60.023	75.029	78.750	H+ V+	1312 x 800
XGA 85	1024 x 768	68.700	85.000	94.500	H+ V+	1376 x 808
WXGA 60	1280 x 768	47.760	60.000	79.998	H- V+	1675 x 796
WXGA+ 60	1440 x 900	55.919	59.999	106.470	H- V-	1904 x 932

SXGA 60	1280 x 1024	63.981	60.020	108.000	H+ V+	1688 x 1066
SXGA+ 60	1400 x 1050	64.740	59.950	101.000	H+ V+	1560 x 1080
WSXGA+ 60	1680 x 1050	65.222	60.002	147.140	H- V-	2256 x 1087
1920 x 1080 60	1920 x 1080	67.500	60.000	148.500	H+ V+	2200 x 1125
MAC 13”	640 x 480	35.000	66.667	30.240	H- V-	864 x 525
MAC 16”	832 x 624	49.107	75.087	55.000	H- V-	1120 x 654
MAC 19”	1024 x 768	60.241	74.927	80.000	H- V-	1328 x 804

9.3 Specifications

Overview

The Starlight uses the latest technology developed to provide the ultimate video-projection experience. LCoS (Liquid Crystal on Silicon) technology based on a reflective principle features an extremely high-definition picture and seamless color gradations.

Emission Method		LCoS (Reflective Active Matrix Principle)
Display Panel/Size		0.7" LCoS panel
Native Resolution		3x 1920 x 1080 pixels
Contrast Ratio		32,000:1 (R9010097) 50,000:1 (R9010098)
Projection Lens		Throw Ratio 1.4:1 - 2.8:1 with 2.0x Zoom Electronic zoom, focus et shift Electronic aperture control
Brightness		1000 ANSI Lumens (Starlight - R9010097) 900 ANSI Lumens (Starlight 2 - R9010098)
Screen Size		60" to 250" (Aspect ratio 16:9)
Distance range		from 1,50m to 12 m
Input Signals		
	Video Input	NTSC, NTSC 4.43, PAL-N, PAL-M, PAL60, SECAM
	S-Video Input	NTSC, NTSC 4.43, PAL-N, PAL-M, PAL60, SECAM
	Component Input	(YPbPr) 480i/p, 576i/p, 720p50/60, 1080i50/60
	VGA (Sub-D15) **(StarLight2 only)**	VGA@60-85Hz, SVGA@56-85Hz, XGA@60-85Hz, SXGA@60Hz, WSXGA@60Hz, 1920x1080@60Hz(H+V+)
	HDMI 1 Input	480i/p, 576i/p, 720p50/60, 1080i50/60, 1080p24/50/60 VGA@60Hz, SVGA@60Hz, XGA@60Hz, WXGA@60Hz, SXGA@60Hz, WSXGA@60Hz,WUXGA@60Hz
	HDMI 2 Input	480i/p, 576i/p, 720p50/60, 1080i50/60, 1080p24/50/60 VGA@60Hz, SVGA@60Hz, XGA@60Hz, WXGA@60Hz, SXGA@60Hz, WSXGA@60Hz,WUXGA@60Hz
Color Management		Advanced color settings (primaries and secondaries saturation and range)
Video processing		DNR, MNR, BNR
Input Sync Frequency		
	Analog Inputs	74.5 Mhz
	Digital Inputs	150 Mhz
Light-source Lamp		250 W Ultra-high pressure mercury lamp
Power Requirements		AC 110 V - 240 V AC, 50 Hz/60 Hz
Power Consumption		<310W (0.7W in standby mode)
Dimensions **(Width x Height x Depth)**		(Excluding feet) 386 x 199 x 500 mm - 15.2" x 7.8" x 19.7"
Net Weight		approx. 15,2 Kg - 33.5 lbs

- Design and specifications are subject to change without prior notice.
- Please note that some of the pictures and illustrations may have been abridged, enlarged or contextualized in order to aid comprehension. Images may differ from the actual product.

3-CHIP LCoS SYSTEM

LCoS is the abbreviation of Liquid Crystal on Silicon. The 3-Chip LCoS systems feature dedicated panels for each color channel and render seamless color graduations without any flickering or rainbow effect artifacts.

Dimensions

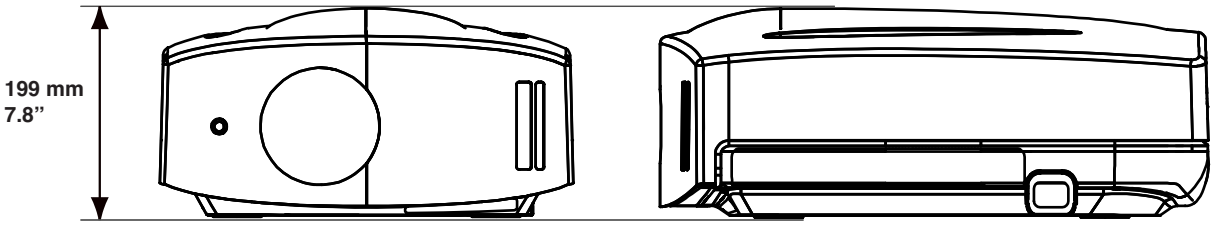

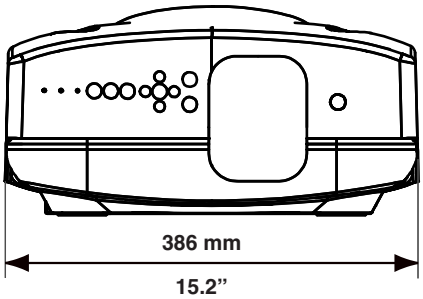

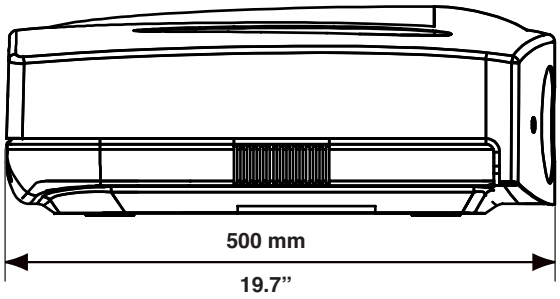

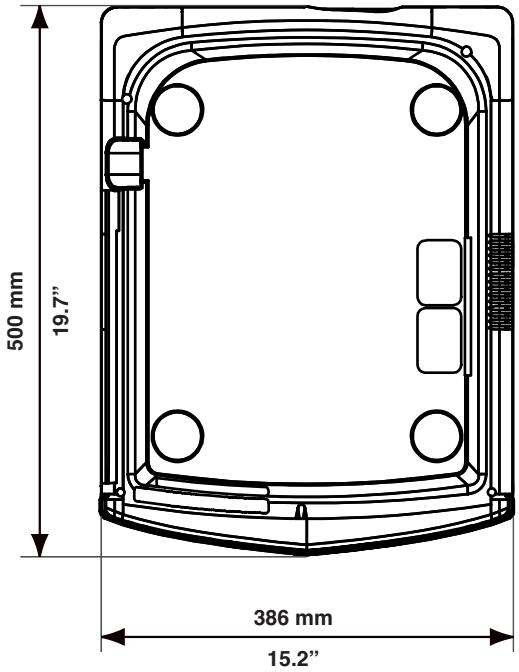

Contact Information:

TEC - Dreamvision
7, rue La CAILLE, 75017 Paris - FRANCE
Web: www.dreamvision.net