USA's primary source for projector lamps
myprojectorlamps

PROJECTOR OWNER'S MANUAL

Christie

VISTAGRAPHX 10K

Need a replacement lamp for this projector?

www.myprojectorlamps.com

Original manufacturer manual, provided unmodified as a courtesy of MyProjectorLamps.com.
All trademarks belong to their respective owners.

VistaGRAPHX 10K Roadie ELECTROHOME User's Manual

Table of Contents

		Section	Contents	Page
1	Introduction	1.1	The Projector	1-1
		1.2	Components	1-2
		1.3	Purchase Record and Servicing	1-2
2	Installation & Setup	2.1	Quick Setup	2-1
		2.2	Installation Considerations	2-2
		2.3	Projector Position and Mounting	2-8
		2.4	Source Connections	2-12
		2.5	Power Connection	2-16
		2.6	Operating Orientation	2-16
		2.7	Leveling	2-17
		2.8	Zoom, Focus & Vertical Offset	2-17
		2.9	Serial Port Connections	2-17
		2.10	Keypad Protocols	2-21
3	Operation	3.1	Overview	3-1
		3.2	Projector Basics	3-1
		3.3	Using the Keypad	3-5
		3.4	Navigating the Menus	3-12
		3.5	Using Inputs and Channels	3-17
		3.6	Adjusting the Image	3-21
		3.7	Adjusting and Checking System Parameters	3-33
		3.8	Using Multiple Projectors	3-39
		3.9	Error Conditions	3-40
4	Maintenance	4.1	Warnings and Guidelines	4-1
		4.2	Cleaning	4-3
		4.3	Replacing Keypad Batteries	4-3
		4.4	Replacing the Lamp and Filter	4-4
		4.5	Replacing the Lens	4-9
		4.6	Troubleshooting	4-12
5	Specifications	5.1	Specifications	5-1
6	Appendices	A	Glossary	A-1
		B	Keypad Reference	B-1
		C	Menu Tree	C-1
		D	Serial Communication Cables	D-1
		E	Throw Distance	E-1
		F	Optional Input Modules	F-1

NOTE: Due to constant research, all information in this manual is subject to change without notice

Downloaded from Projector.com

Section 1

Introduction

1.1 The Projector

VistaGRAPHX 10K Roadie is a professional-quality DMD™ projector that uses 3-chip Digital Light Processing™ (DLP™) technology from Texas Instruments to achieve stunning ultra high-brightness multimedia and video projection. It is a rugged projector ideal for use in extra large audience venues, such as auditoriums, arenas and outdoor stages. The *VistaGRAPHX 10K Roadie* is compatible with standard international video formats and can interface with IBM-compatible PCs, Macintosh® computers, and workstations. Features include:

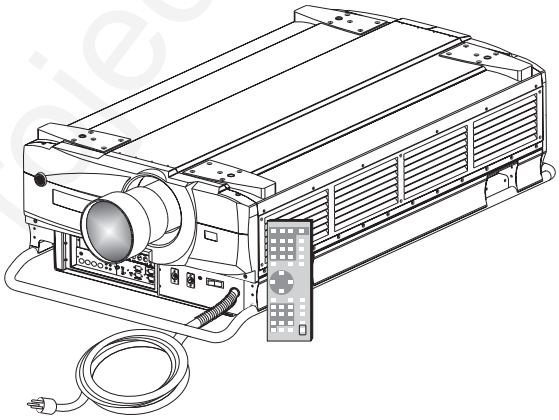

Figure 1-1. VIstaGRAPHX 10K

- ◊ up to 10000 ANSI lumens brightness
- ◊ contrast ratio greater than 160:1 ANSI; over 300:1 full field
- ◊ 1024 x 768 pixels true resolution, with other resolutions fully scaleable
- ◊ independent horizontal and vertical size adjustment for custom scaling
- ◊ interchangeable lenses for diagonal screen sizes up to 40 feet
- ◊ displays NTSC, PAL and SECAM video input *(requires optional decoder)*
- ◊ displays input from PCs, VCRs, laser-disc players, video cameras, etc.
- ◊ memory for up to 99 custom “channels” (source setups)
- ◊ intuitive on-screen menus or hidden direct control
- ◊ identical built-in and remote keypads
- ◊ controller and switcher compatibility
- ◊ input switching with keypad
- ◊ Intelligent Lens System® for automatic recall of lens settings from channel to channel
- ◊ built-in RS-232 input for computer control and networked projectors
- ◊ RS-422 input for extra long distance control
- ◊ rugged, functional design for harsh environments and secure handling
- ◊ modular design for easy servicing

How it Works ➤ *VistaGRAPHX 10K* accepts data/graphics and video input signals for projection onto flat or curved front or rear projection screens. High brightness light is generated by an internal 1.8 kilowatt Xenon arc lamp, then modulated by three

Downloaded from Projector.com

DMD (digital micromirror device) panels that provide digitized red, green, or blue color information. Light from the "ON" pixels of each panel is reflected, converged and then projected to the screen through a single front lens, where all pixels are perfectly superimposed as a sharp full-color image.

Construction ➤ The projector enclosure is comprised of a combination of metal panels, extrusions and polymer bezels. Separate access doors and grill panels are easily removed for quick replacement of the lamp and filter. Modular internal design provides for ease-of-service and minimal down-time.

1.2 Components

Included with the standard projector is a built-in keypad, infrared (IR) remote keypad, integral 30 amp line cord, 4 eye bolts, and a *VistaGRAPHX 10K User's Manual*. Make sure you have all these items, and note that if you have purchased the projector, a purchaser's Warranty Registration Card is also included — fill out this card and return it directly to Electrohome.

*NOTE: While the **VistaGRAPHX 10K** does not include a video decoder module (optional), this manual assumes that the video decoder is installed.*

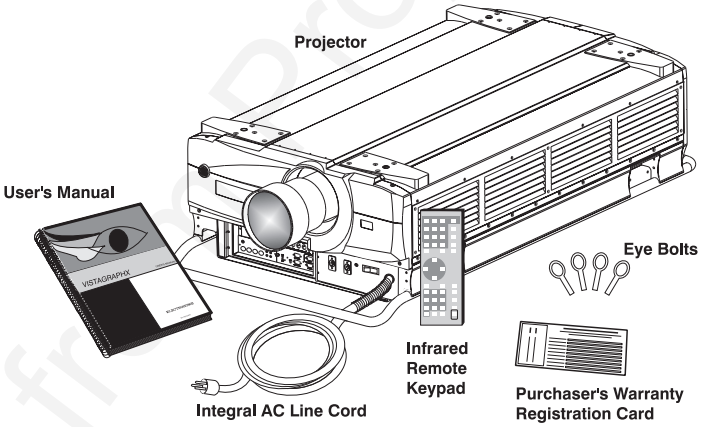

Figure 1.2. VistaGRAPHX 10K System Components (with Lens Added)

1.3 Purchase Record and Servicing

Whether the projector is under warranty or the warranty has expired, Electrohome's extensive factory and dealer service network is always available. Electrohome service technicians are fully trained to quickly diagnose and correct projector malfunctions. Complete service manuals and updates are available to service technicians for all purchased *VistaGRAPHX 10K* projectors.

If you have a problem with the projector and require assistance, contact your dealer or Electrohome. In many cases, servicing can be performed on site. If you have purchased the projector, fill out the information below and keep with your records.

Purchase Record

Dealer:	
Dealer Phone Number:	
Projector Serial Number*:	
Purchase Date:	
Installation Date, if applicable:	

** NOTE: The projector serial number is on the projector's front identification label.*

Downloaded from Projector.com

Section 2

Installation & Setup

This section explains how to install and set up the projector. If you are familiar with the projector and want to quickly set it up for temporary use, follow the *Quick Setup* instructions below. For a more complete setup, follow the instructions and guides covered in the remaining subsections.

NOTES: 1) The lens for the projector is not mounted when shipped from the factory. For instructions on how to install or replace a lens, refer to 4.5, Replacing the Lens. 2) This manual assumes the video decoder is installed.

2.1 Quick Setup

Follow these 6 steps for quick temporary setup of the projector.

STEP 1 ➤ Position the Projector

Set the projector at the proper throw distance (projector-to-screen distance) and vertical position. See *2.3, Projector Position and Mounting* and *Appendix E*. Make sure that the projector is level from side-to-side (see *2.7, Leveling*).

STEP 2 ➤ Connect a Source

Locate the four input panels at the front left corner of the projector. The upper right panel accepts an RGB input via BNC connectors. The lower left panel accepts a composite video and S-video input. Connect a source to the appropriate panel.

STEP 3 ➤ Connect the Line Cord to AC Power

The projector has its own integral 30-amp line cord for connecting to AC. Input power required is 220 - 240 VAC, 50 to 60 Hz @ 12 amps. ***Twist plug to secure.***

WARNING:
Do not attempt operation if the AC supply is not within the specified voltage and power range.

STEP 4 ➤ Turn the Projector ON

Using either keypad, press [Power*] and hold for a second or two to turn the projector on (or press [Power*] [▲ON]). Let the projector warm up for about five minutes. The Power LED and the AC LED should both glow a steady green.

STEP 5 ➤ Select a Source

Using either keypad, press [Input1], [Input2], [Input3], or [Input4] to select and display the image for the source you connected in Step 2. It will resize as needed, producing an image as large as possible while maintaining the original aspect ratio.

Downloaded from Projector.com

STEP 6 ➤ *Adjust Focus and Zoom*

With the input image displayed, press Lens on either keypad. In the *Lens* menu that should appear, press Enter to adjust the first *double slidebar* for focus and zoom *(NOTE: This zoom adjustment requires a VistaGRAPHX ILS® zoom lens).*

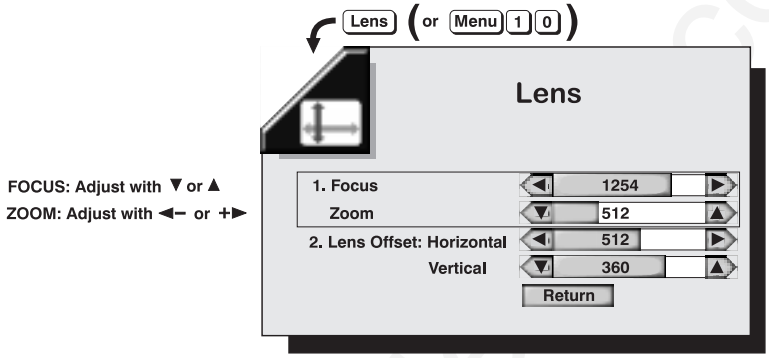

Use the keypad as shown above to focus the image clearly and to increase or decrease image size (applies to motorized zoom lenses only). If desired, adjust horizontal or vertical options to shift the image location. Press Enter when you are done with a double slidebar. To go to the other slidebar, press ▼ or ▲ and press Enter. Or simply press the desired option number.

NOTE: If the menu does not appear when you press Lens, the OSD (on-screen display) has likely been turned off. You can still adjust the options as described, or press and hold OSD for a moment if you want to turn the menu back on.*

Press Menu to refine other display parameters. See *3.5, Using Inputs and Channels* if you want to work with other source inputs or defined channels.

2.2 Installation Considerations

Although *VistaGRAPHX 10K* delivers a high brightness quality output, the final display quality could be compromised if the projector is not properly installed. This subsection discusses issues you should consider before proceeding with a final installation. Even if you do not intend to use *VistaGRAPHX 10K* in a fixed and permanent installation, this subsection will help you to better understand what may be done to enhance display performance.

Lifting and Hoisting ➤

For any new installation, you will likely have to safely lift or hoist the projector into place. Keep in mind the following guidelines for safety.

Using the Integral Handles

The projector includes integral wrap-around aluminum handles for convenient grasping. While these handles are adequate for brief hand transport, such as lifting or carrying over short distances by 2 or more people, the end handles are not intended to support the entire weight of the projector for extended periods of time. In particular, do not hoist or suspend the projector from these end handles or use them in an installation (see Figure 2-1).

⚠ WARNING
Use end handles for brief hand transport only.

Downloaded from Projector.com

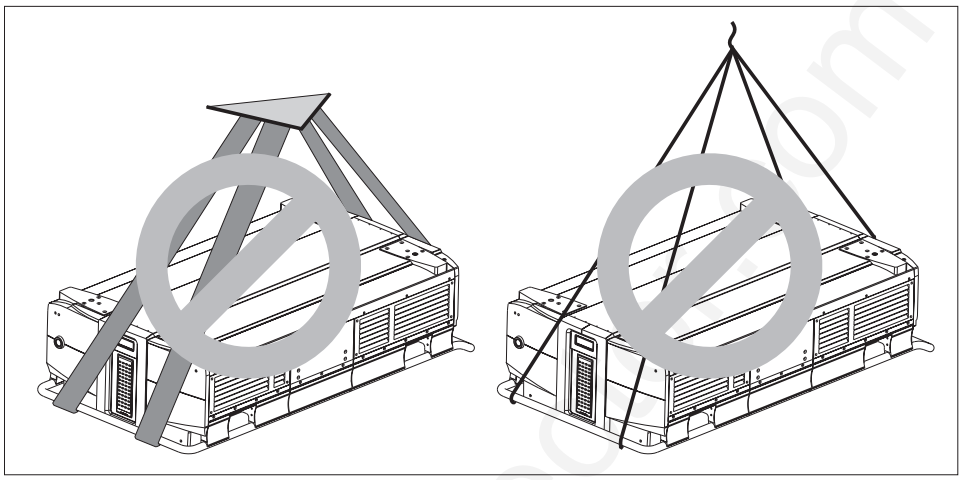

Figure 2-1. Do not hoist by end handles

Hoisting the Projector into Place

You can use appropriate nylon webbed strapping and hoisting/rigging equipment to lift the projector and/or install it as a permanently suspended installation.

⚠ WARNING
Use straps or cabling with load capacity adequate for the projector weight. See page 5-3.

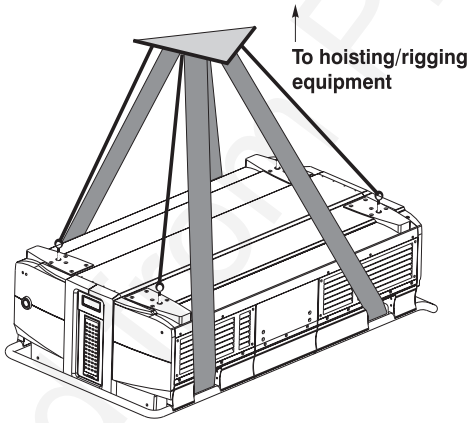

Figure 2-2. Straps in Place

Make sure to attach the straps inside the side handles only, as shown in Figure 2-2 — do not use the end or side handles. Hoist only one projector at a time.

⚠ IMPORTANT
Remove the lens before hoisting.

Note that the projector also includes tapped bolt holes in each corner that accept screw-in eye bolts (provided). Attach the 4 eye bolts and rig them with safety cabling whenever you are hoisting the projector into place or suspending it permanently (Figure 2-3).

⚠ WARNING
Use at least 20 in. lb. torque to attach eyebolts.

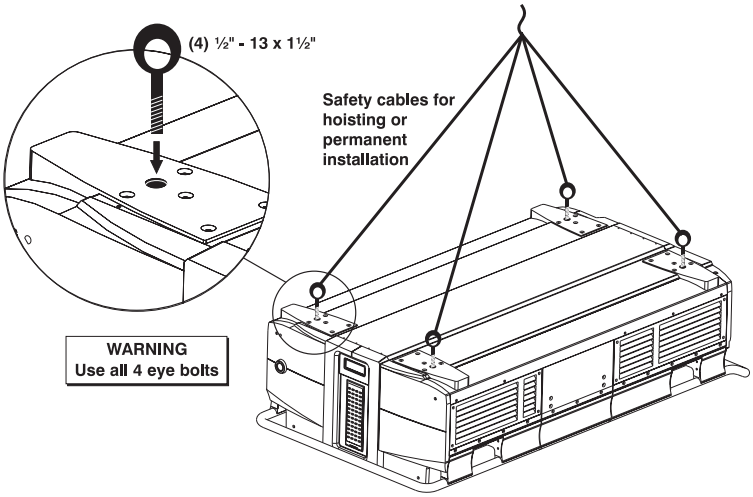

Figure 2-3. Safety Cables

Downloaded from Projector.com

Installation Type ➤

Choose the installation type which suits your needs: front or rear screen, floor mount or inverted mount.

Front Screen, Floor Mount Installation

ADVANTAGES	CONSIDERATIONS
• Easy to set up • Can be moved or changed quickly • Easy to access	• Shares floor space with audience

Front Screen, Inverted Mount (ceiling) Installation

ADVANTAGES	CONSIDERATIONS
• Does not take up audience space • Projector is unobtrusive • Projector cannot be accidentally moved	• Installation is more permanent • It is more difficult to access the projector

Rear Screen, Floor Mount Installation

ADVANTAGES	CONSIDERATIONS
• Projector is completely hidden • Projector is easily accessed • Usually good ambient light rejection	• Requires separate room

Rear Screen, Inverted Mount (ceiling) Installation

ADVANTAGES	CONSIDERATIONS
• Projector is completely hidden • Usually good ambient light rejection	• Requires separate room • Installation cost is usually higher

Rear Screen, Floor Mount with Mirror

ADVANTAGES	CONSIDERATIONS
• Projector is completely hidden • Usually good ambient light rejection • Requires less space behind screen than other rear screen installations	• Requires separate room. • Installation cost is usually higher

Screen Type ➤

Screen type is important when designing a projection system. Inexperienced users or installers should always consult their dealer when deciding on screen type. The following guidelines explain the differences between screen types.

Front Screen Installations

There are two basic screen types: flat and curved. The choice between a flat screen or a curved screen is dependent on audience viewing angle and screen gain. There is always a trade-off between viewing angle and gain. Viewing angles for both screen types are illustrated in Figure 2-4 and Figure 2-5 (plan views).

Flat screens offer a gain of about 1 with a viewing angle just less than 180°. Incident light reflects equally in all directions so the audience can see the display from various angles. Because of the lower gain, flat screens are more effective when ambient lighting is reduced, although this difference may be negligible given the ultra high brightness output from this projector.

Downloaded from Projector.com

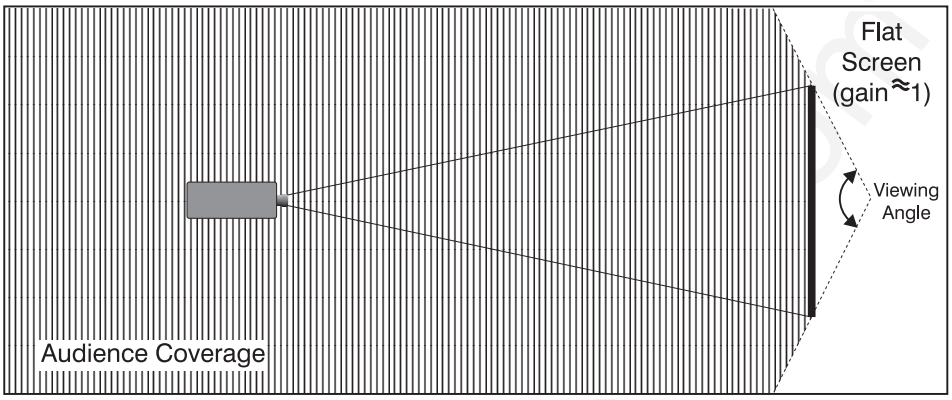

Figure 2-4. Audience Coverage with Flat Screen

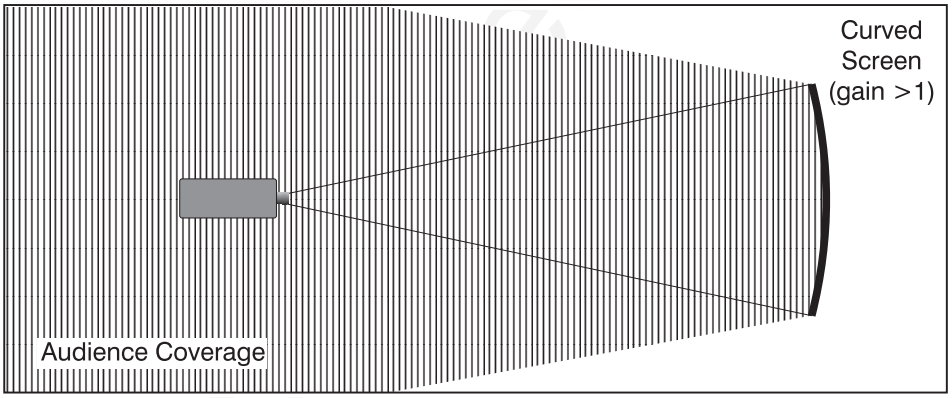

Figure 2-5. Audience Coverage with Curved Screen

Curved screens have gains larger than 1 (due in part to the screen material) and viewing angles much less than 180°. Most curved screens have different horizontal and vertical viewing angles. Incident light does not reflect equally in all directions. The reflected light concentrates in a conical volume or "viewing cone". Audiences within the viewing cone see a brighter image than that from an equal area on a flat screen. Audiences outside the viewing cone see a dimmer image.

NOTE: VistaGRAPHX 10K lenses are designed primarily for use with flat screens. However, the projector depth-of-field range allows the lens to be focused on curved screens as well. Focus remains sharp in the corners, however there may be significant pincushion distortion, primarily at the top of the screen.

Rear Screen Installations

There are two basic types of rear screens: diffused and optical. A diffused screen has a surface which spreads the light striking it. Purely diffused screens have a gain of less than 1. The main advantage of the diffused screen is its wide viewing angle, similar to that of a flat screen for front screen projection. Optical screens take light from the projector and redirect it to increase the light intensity at the front of the screen. This reduces it in other areas. A viewing cone, similar to that of a curved front screen installation, is created.

Downloaded from

To summarize, optical screens are better suited for brightly lit rooms where the audience is situated within the viewing cone. Diffused screens are best suited when a wide viewing angle is required but there is low ambient room lighting.

Screen Size ➤

Screen size may be from 6 to 40 feet diagonal, depending on the lens you are using. For instance, a 1:1 lens produces a 6-30 foot image size, whereas a 4-7:1 zoom lens produces a 10-40 foot image size. Choose a screen size which is appropriate for your lens and application. Keep in mind that if the projector will be used to display text information, the image size must allow the audience to recognize all text clearly. The eye usually sees a letter clearly if eye-to-text distance is less than 150 times the height of the letter. Small text located too far from the eye may be illegible at a distance no matter how sharply and clearly it is displayed.

To fill a screen with an image, the aspect ratio of the screen should be equal to the aspect ratio of the image. The aspect ratio of an image is expressed as the ratio of its width to its height. Standard video from a VCR has a 4:3 or 1.33:1 aspect ratio. For example, to display a VCR output with a 4:3 aspect ratio onto a 10 foot (3m) high screen, the width of the screen must be at least 13.3 feet (4m).

Note: Screen size is often specified as diagonal size. Screens specified by diagonal size have aspect ratios of 4:3. Screens with other aspect ratios are not typically specified by diagonal size.

Ideal Room Lighting ➤

The high brightness output of *VistaGRAPHX 10K* is certainly well suited for locations where ambient lighting is less than optimum for projection, but there are still many simple things you can do to optimize your installation.

Visiting a movie theater can give you an idea of what makes an ideal projection environment. Walls, floors and furnishings are dark and matte finished. A projection room should not have white reflective ceilings or non-directional lighting such as fluorescent lights. The white ceiling spreads light, making the room appear brighter. Keep lighting and reflections to a minimum.

If it is not possible to eliminate fluorescent lights, consider using incandescent spot lighting or parabolic reflectors ("egg crates") to direct light down to the floor. Light dimmers or rheostats allow further control.

Outside windows are undesirable in any projection room. A small crack between curtains on a sunny day can wash out a projected image. If you do have windows, make sure that window coverings are opaque and overlapping — some window coverings are designed to provide up to 100 percent blockage of outside light. Ideally, the material should have a matte finish.

To minimize the effects caused by unwanted light from door and aisle ways, carefully choose the position of your projector and screen. Figure 2-6 shows an installation where poor screen placement allows too much unwanted light to enter the screen. In Figure 2-7, the screen and the projector are positioned so that unwanted light is minimized.

Downloaded from Projecta.com

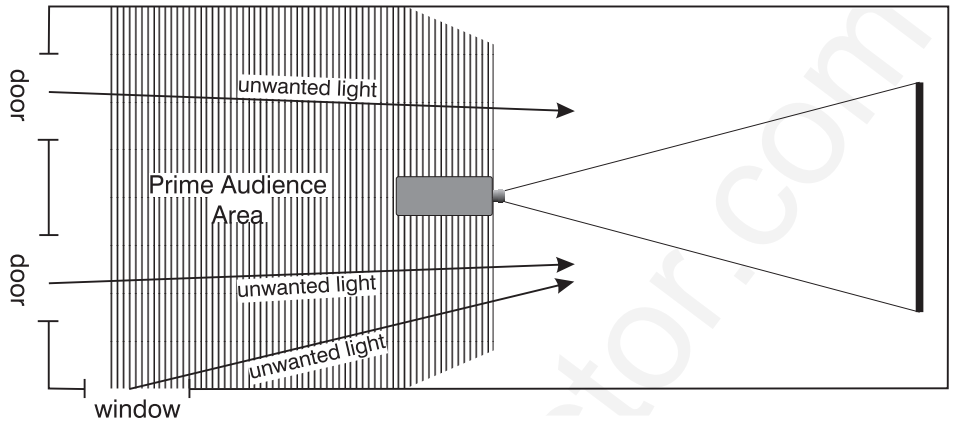

Figure 2-6. Poor Screen Placement

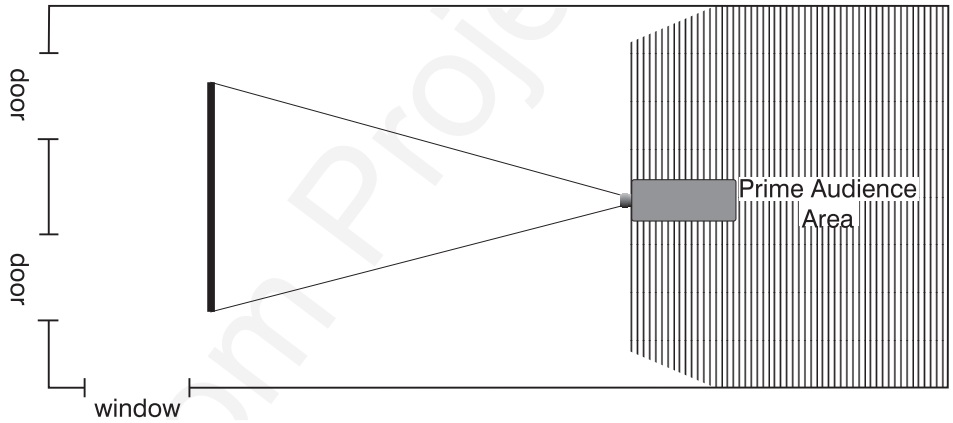

Figure 2-7. Better Screen Placement

Even with all lighting removed it is still possible that room reflections within the room can slightly degrade the image. Light from the projection screen should be absorbed by the ceilings, walls and floors so that it will not be reflected back to the screen. Again, keep reflective surfaces to a minimum.

Other Considerations ➤ Here are some other considerations and tips which can help you improve your installation:

- Ventilation is an important factor when preparing a projection room. The ambient temperature should be kept constant and below 35°C (95°F). Keep the projector away from heating and/or air conditioning vents. Changes in temperature can cause drifts in the projector circuitry which may affect performance.
- Keep the projector away from devices which radiate electromagnetic energy such as motors and transformers. Common sources of these are slide projectors, speakers, power amplifiers, elevators, etc.
- For rear screen applications, less space is required if a mirror is used to fold the optical path.
- Choose the right screen size for the application:

Downloaded from Projector.com

◊ As screen size increases, magnification increases which reduces brightness. Select a screen size which is appropriate for the venue, but not larger than that required.

◊ Installing a large screen in a small room is similar to watching television close up; too large a screen can overpower a room. A good rule of thumb is to be no closer than 1.5 times the width of the screen.

◊ Larger screens require greater attention to lighting conditions.

- When laying out the projection room, consider positioning the projector and screen in a manner which will achieve maximum audience coverage and space efficiency. For example, placing the screen along the larger wall in a rectangular room will reduce audience coverage. Figure 2-8 shows two examples of how audience coverage is maximized.

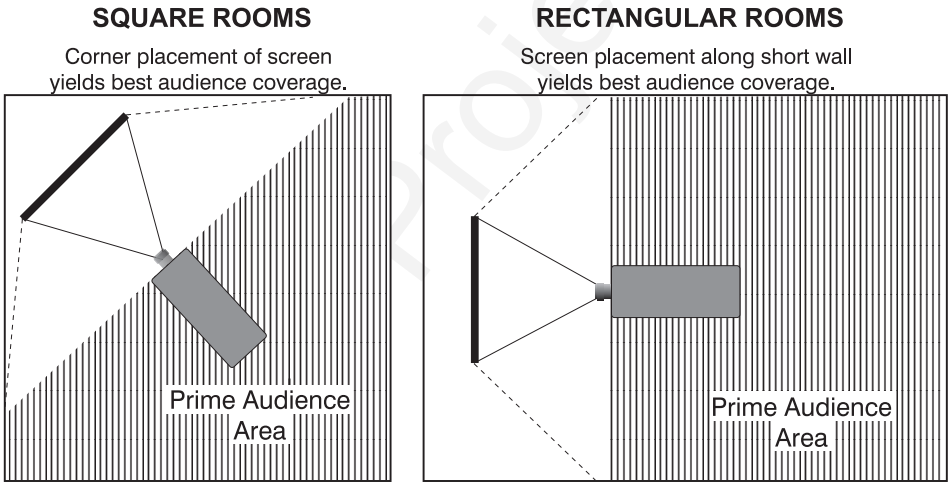

Figure 2-8. Screen Locations for Maximum Audience Coverage

2.3 Projector Position and Mounting

Installation type, screen type, and lighting all affect where the projector is positioned. In addition, both throw distance (the distance between the projector and screen) and vertical position (the height of the projector in relation to the screen) must be determined for every new installation. Both depend on the screen size and projector lens type you are using. Make sure that the room can accommodate the required position of the projector for the chosen screen size.

Throw Distance ➤

Throw distance is the distance between the projector's front feet and the screen. It is measured perpendicular to the lens surface and screen surface. As you move the projector farther from the screen, the image becomes larger.

Throw distance is roughly equal to the horizontal width of the screen multiplied by the type of lens you are using. For example, if you are using a 3.9:1 lens, throw distance should be approximately 3.9 x the screen width. Once you know your screen size, you can estimate how far away the projector should be, as shown in Table Chapter 2 -1. ***IMPORTANT: For exact placement in an installation, always refer to the throw distance formula and/or graph for your lens as listed in Appendix E.***

Downloaded from Projector.com

Table Chapter 2 -1. Approximate Throw Distances

Lens Type	Approximate Throw Distance
0.8:1	0.8 x horizontal screen width
1:1	1 x horizontal screen width
2.3:1	2.3 x horizontal screen width
3.9:1	3.9 x horizontal screen width
5.5:1	5.5 x horizontal screen width
1.2 - 2.3:1	from 1.2 to 2.3 x horizontal screen width
1.5 - 2.5:1	from 1.5 to 2.5 x horizontal screen width
2.5 - 4:1	from 2.5 to 4 x horizontal screen width
2.3 - 5.5:1	from 2.3 to 5.5 x horizontal screen width
4 - 7:1	from 4 to 7 x horizontal screen width

NOTE: See Table 2-2 for original VistaPro lens model equivalents.

NOTES: 1)While throw distance is measured perpendicular to the screen and projector, this measurement is not necessarily parallel to the floor — both projector and screen may be inclined together. 2) It is good practice to simulate the setup with the projector fully warmed-up to determine the precise throw distance required. 3) Always use the throw distance information from Appendix E.

Vertical Position ➤

The vertical position of the projector in relation to the screen also depends on the size of the screen and the lens type. Correct vertical position ensures that the image will be rectangular in shape rather than keystoned (having non-parallel sides) and that image focus and brightness both remain optimized.

Vertical position is offset—that is, the image can be moved—by using the Lens key. This displays the Lens menu, where both horizontal and vertical offset can be adjusted with slidebars. Note that the range of adjustment depends on the lens type you are using. See Table Chapter 2 -2 for the number of pixels by which you can move an image using a specific lens. Refer to Figure 2-9 to see more clearly how the pixel offset ranges affect the placement of your image in relation to the vertical position of the projector.

Table Chapter 2 -2. Offsets, in Pixels

Lens Type	Maximum Recommended Offset (in Pixels)
0.8:1	± 384
1:1 *(VistaPro 1.2:1)*	± 150
2.3:1 *(VistaPro 3:1)*	± 325
3.9:1 *(VistaPro 5:1)*	± 250
5.5:1 *(VistaPro 7:1)*	± 150
1.2 - 2.3:1 *(VistaPro 1.5-3:1)*	± 80
1.5 - 2.5:1	± 384
2.5 - 4:1	± 384
2.3 - 5.5:1 *(VistaPro 3-7:1)*	± 125
4 - 7:1	± 384

NOTES: 1) If you cannot raise or lower the image enough for your installation, or if the image becomes keystoned or exhibits uneven brightness, the projector is probably too high or low in relation to the screen. 2) Recommended offset ranges can be exceeded, however this may affect image quality. 3) Simultaneous ***horizontal*** *offset can limit the range of vertical offset.*

Downloaded from Projector.com

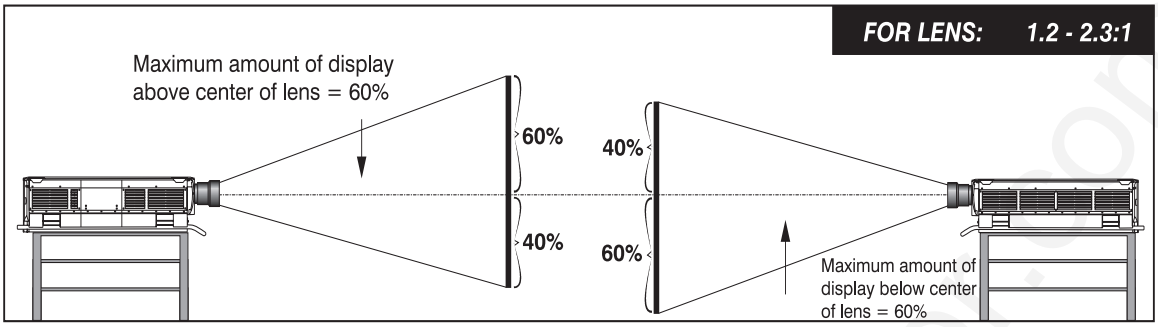

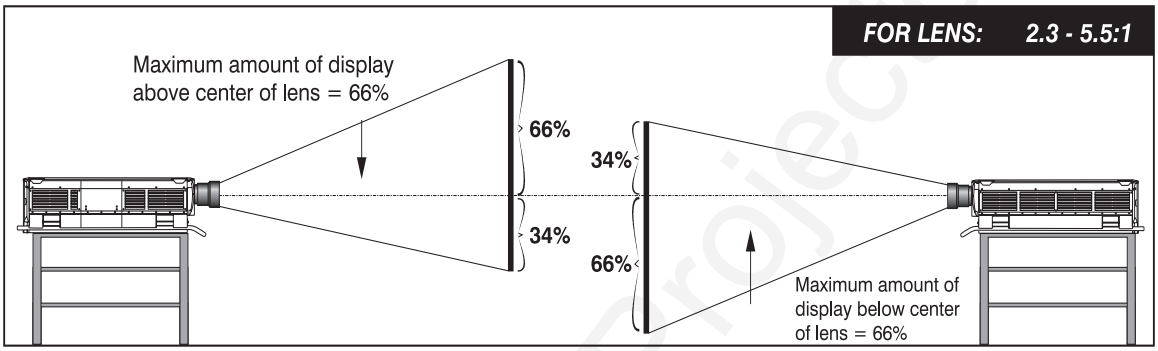

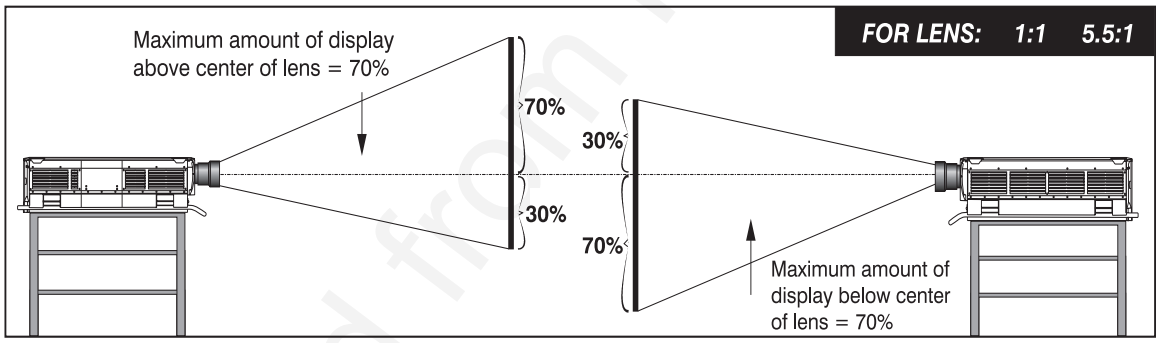

NOTES FOR ALL LENSES:
Maximum optical performance is produced at zero offset (i.e., with the projector at the center of the screen) — geometry, focus and light output will all be optimized.

For inverted projectors, invert the illustrations.

Downloaded from Projector.com

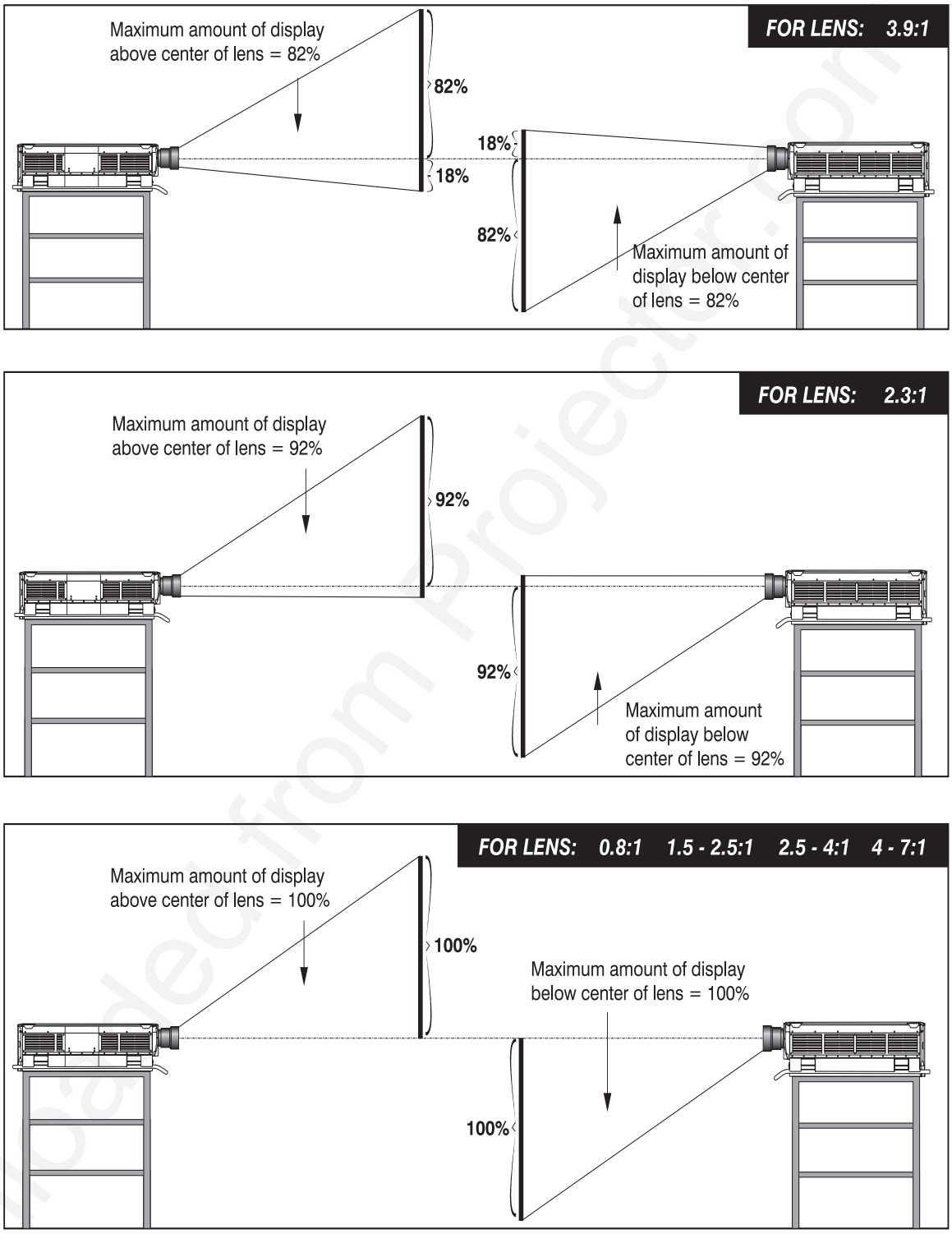

Figure 2-9. Vertical Offset Ranges

Mounting ➤ For typical front or rear floor mounts, mount the projector on a secure table or cart. Take care with a mobile cart—avoid sudden stops, excessive force and uneven surfaces that may cause the projector and cart combination to overturn.

Downloaded from Projector.com

The table or cart should be reasonably level. Fine adjustments to the projector level can be made by adjusting the height of the projector legs; refer to *2.7, Leveling* for details.

Special Mounting

Note that *VistaGRAPHX 10K* can be rotated and mounted at any vertical angle-i.e., you can tilt the projector forwards or backwards as much as desired for your application. The side-to-side tilt, however must not exceed 15° (see Figure 2-10). This limit ensures that the arc lamp in the projector operates properly and safely. Always make sure that exhaust air from the projector does not vent towards the lens, otherwise you may detect heat waves in your projected image.

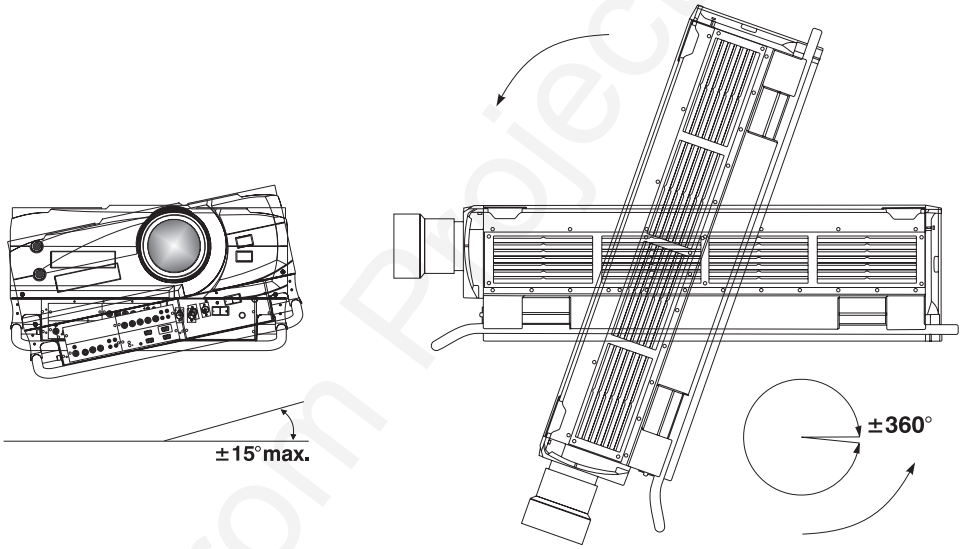

Figure 2-10. Vertical and Horizontal Tilt Ranges

You must use an Electrohome ceiling mount fixture if the projector is to be inverted and suspended. For more information, contact your dealer.

Folded Optics ➤ In rear screen applications where space behind the projector is limited, a mirror may be used to fold the optical path. See Figure 2-11. The position of the projector and mirror must be accurately set — if considering this type of installation, call your dealer for assistance.

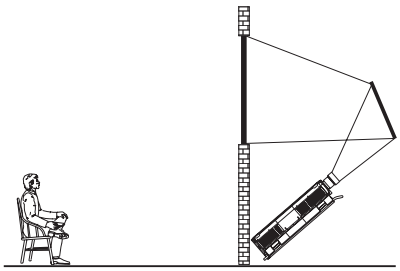

Figure 2-11. Folded Optics

2.4 Source Connections

The front panel of the projector has two standard input panels to which you may connect a variety of sources. The upper right panel (Input 1) accepts an RGB input from an external RGB source with audio follow-through. The lower left panel (if video decoder module is installed) accepts composite video (Input 3) or S-video (Input 4) and audio from devices such as video tape or disk players. There are also several optional interfaces available for connecting other sources (Input 2). Such an option installs in the upper left panel. See Figure 2-12.

Downloaded from Projector.com

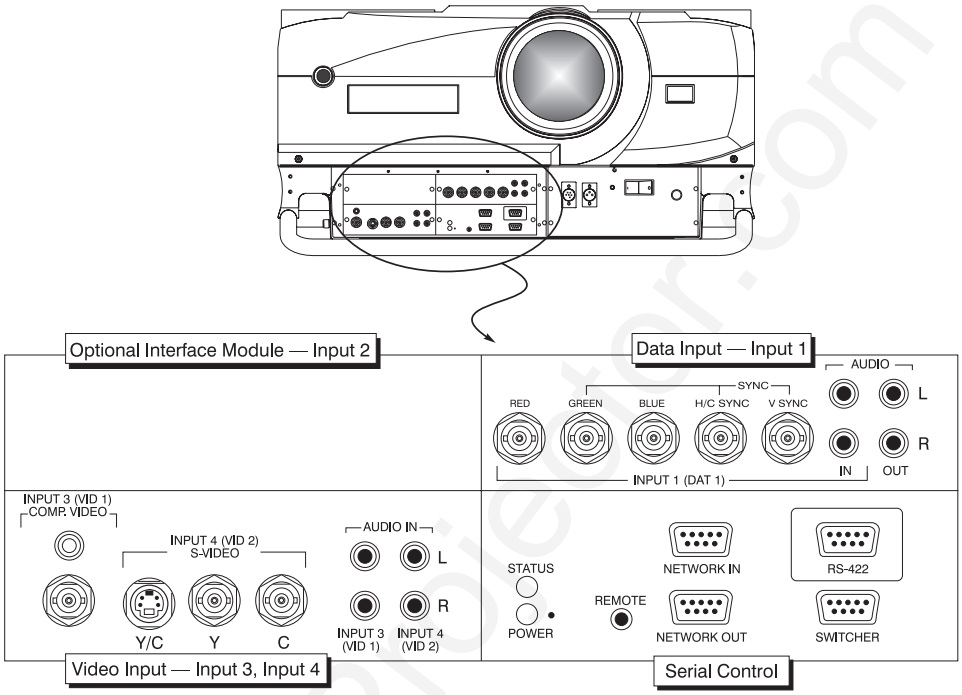

Figure 2-12. VistaGRAPHX 10K Front Panel

RGB Input ➤ The RGB input (Input 1) includes BNC type connectors for connection to a variety of RGB sources. Such sources include VGA, SVGA, XGA, Mac, PowerMac, DEC, Sun, SGI and others. *VistaGRAPHX 10K* supports multiple sync types: sync-on-green for data, composite, and separate H & V.

NOTE: Depending on the source, you may need a custom adapter cable that has BNC connectors at the projector end and different type of connector at the other (such as a 15-pin "D" connector for computer sources). Contact your dealer.

Connect the sync BNC input(s) first. Then connect the red, green and blue source outputs to the RED, GREEN, and BLUE inputs on the panel. If the source uses sync-on-green, only the red, green, and blue connections are required. If the source provides a composite sync output, connect it to the H/C SYNC input. If the source provides separate horizontal and vertical sync outputs, connect horizontal sync to the H/C SYNC input and connect vertical sync to the V SYNC input. See Figure 2-13.

Connect component video as follows:

Y *to "**Green**"*
U *(also called B-minus-Y) to "**Blue**"*
V *(also called R-minus-Y) to "**Red**"*

*NOTES: 1) **VistaGRAPHX 10K** does not automatically recognize a YUV signal. When using YUV video, you must specify this signal type within the **Image Settings** menu so that the projector can distinguish between this signal and other RGB sources. See **3.6, Adjusting the Image**. 2) For best performance, do not connect HDTV signals to Input 1 — this type of source requires the HDTV Input Module (available as an option).*

Downloaded from Projector.com

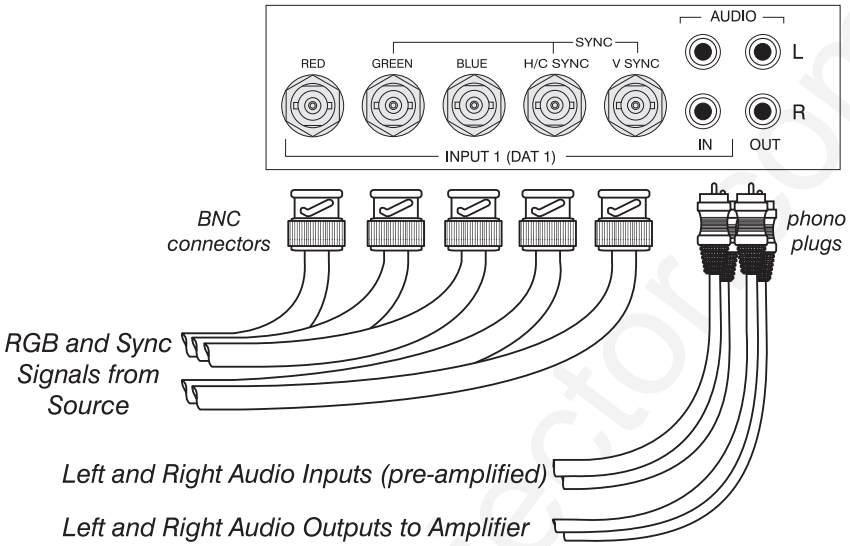

Figure 2-13. RGB Inputs

To control audio levels in an audio/visual system, connect pre-amplified (line level) audio inputs to the left and right channel audio inputs on the Input 1 panel. Then connect the audio outputs to external audio amplification equipment for sound output. All audio connection cables require standard RCA type phono plugs.

Composite Video and S-Video Input

➤ The Composite/S-Video input provides simultaneous connection of both a composite video source (Input 3) and an S-Video source (Input 4).

If connecting a S-Video source, use the 4-pin mini DIN connector ***or*** the Y and C BNC connectors (luminance and chrominance) — do not use both as input. If connecting a composite video source, use the Composite BNC connector ***or*** the RCA phono jack — do not use both as input. See Figure 2-14.

NOTE: If using the loop-through feature for composite or S-Video input, see "Video Termination" in ***3.7, Adjusting and Checking System Parameters****.*

Downloaded from Projector.com

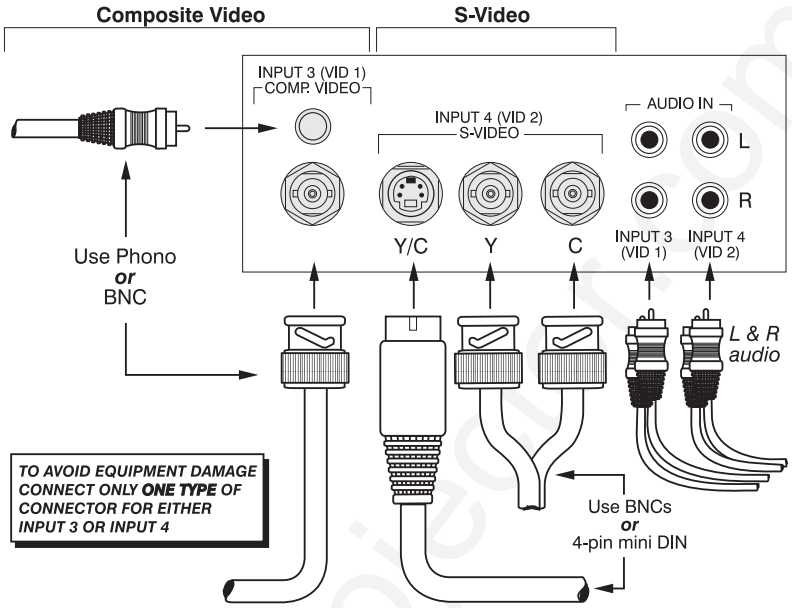

Figure 2-14. Composite and S-Video Inputs

If you want to use an extra video source in addition to the video source(s) connected at Inputs 3 and 4, connect either a Composite or S-Video source to Input 1 as shown in Figure 2-15.

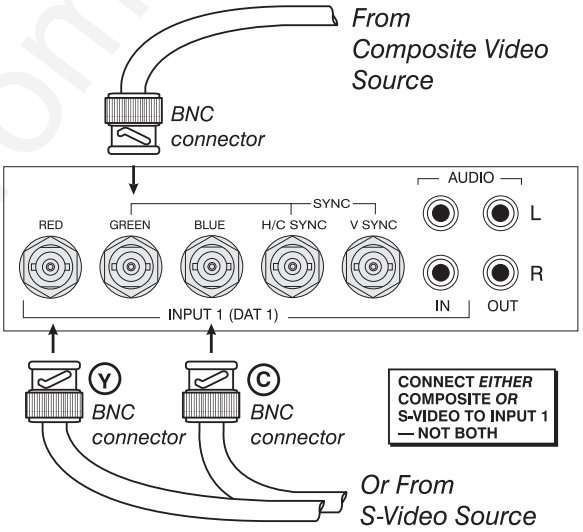

Figure 2-15. Connecting a Video Source to Input 1

Other Inputs ➤ Electrohome Optional Input Modules allow you to increase the total number of inputs and to accommodate other signal types. These modules may be installed in the upper left section of the control panel on the front of the *VistaGRAPHX 10K* (called Input 2). They are:

- RGB Input Module
- RGB Loop Thru Module
- Composite/S-Video Module
- HDTV Input Module

Downloaded from Projecto.com

- PC Analog Input Module
- Vista Digital Input Module *(available Fall '98)*

NOTES: ***1)*** *Installation of optional interfaces must be done by qualified service personnel only — contact your dealer.* ***2)*** *See* ***Appendix F, Optional Input Modules*** *for a brief description of each interface.*

2.5 Power Connection

Plug the twist-locking three-prong end of the integral AC line cord (30 amp, with L6-30 plug) in a matching grounded AC outlet. ***Twist to secure***. Input voltage to the projector must be between 220 and 240 VAC, 50 or 60 Hz. The power source must be capable of supplying 2800 watts (15 amps) of power to the projector.

⚠ WARNING
Do not attempt operation if the AC input is not within the specified input range.

⚠ WARNING
The plug provided includes a third pin as a ground. Do not operate unless the ground connection is intact.

⚠ ***Caution:*** *Once the projector is turned off, the lamp cooling fans will continue to run for approximately five minutes to ensure that the projector and lamp have sufficiently cooled, at which point the fans will automatically shut off. To avoid thermal stress to lamp, never unplug the line cord while the lamp cooling fans are running. Do not unplug the projector or use the circuit breaker switch in order to power down.*

2.6 Operating Orientation

VistaGRAPHX 10K is set up at the factory for use in a front screen, floor mount orientation. If the installation is ceiling mount or rear screen, you may notice that displayed images are upside down and/or reversed. To correct, you must change the image orientation from within the *Preferences* menu (you may prefer to do this before physically installing the projector). See *Section 3, Operation* for further information.

In the *Preferences* menu, highlight and select the "Image Orientation" pull-down list. From a front screen floor mount installation, select from Rear, Inverted Rear, Front or Inverted Front according to your intended installation:

Select "Rear" and check that the display looks like this. → Rear / Inverted Rear / Front / Inverted Front

Select "Inverted Rear" and check that the display looks like this. → Rear / Inverted Rear / Front / Inverted Front

Select "Inverted Front" and check that the display looks like this. → Rear / Inverted Rear / Front / Inverted Front

Downloaded from Projector.com

2.7 Leveling

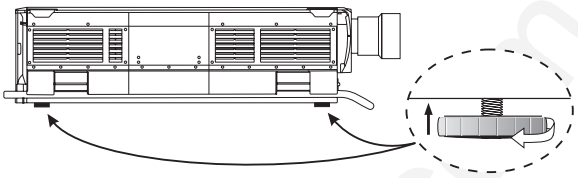

For most installations, the lens surface of the *VistaGRAPHX 10K* projector must be parallel to the screen to prevent keystoning. To make small corrections to the projector's level, rotate each leg as necessary to raise or lower. For angled installations, see *"Special Mounting"* under *2.3, Projector Position and Mounting* earlier in this section.

2.8 Zoom, Focus & Vertical Offset

Once the *VistaGRAPHX 10K* is properly set up and projecting an image on screen, you are ready to make quick lens adjustments.

Focus ➤ Still in the *Lens* menu, adjust the focus slidebar until you obtain the best overall image clarity.

Zoom ➤ If you are using a *VistaGRAPHX* ILS® motorized zoom lens, press Lens to display the *Lens* menu. Adjust the zoom slidebar to decrease or increase the size of the image at the current throw distance (range of adjustment is 3-97).

Lens Offset ➤ Still in the *Lens* menu, adjust the horizontal and/or vertical lens offset. The maximum amount of image shift depends on the lens you are using — see *2.3, Projector Position and Mounting* for details. Adjust until you achieve the best overall brightness without causing a distortion in picture geometry.

For complete information about adjusting the image through keypad commands and on-screen menus, refer to *Section 3, Operation*.

2.9 Serial Port Connections

Use serial communication ports when controlling *VistaGRAPHX 10K* with a personal computer having a serial interface or when using the projector with a *Marquee* switcher. *VistaGRAPHX 10K* serial ports are located on the lower right portion of the projector's front control panel as shown in Figure 2-16.

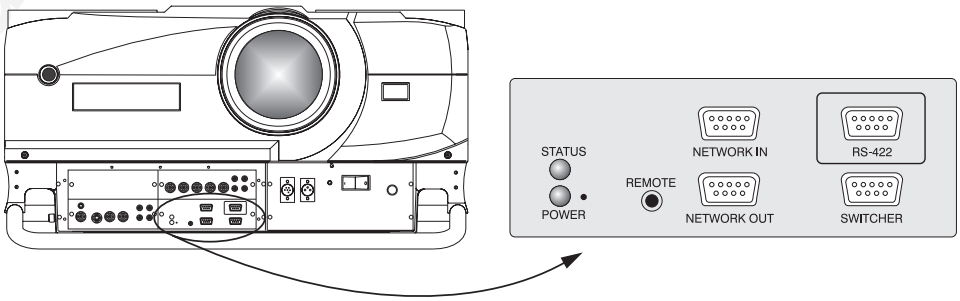

Figure 2-16. Serial Port Connections — RS-232 or RS-422

NOTES: ***1)*** *All* ***VistaGRAPHX 10K*** *serial connections on this panel require a 9-pin D connector. Refer to Appendix D for complete cable wiring requirements.* ***2)*** *The "NETWORK OUT" port is provided for networking applications only — see "If using multiple projectors", below.*

Downloaded from Projector.com

If using a computer ➤ ***The RS-232 Port***

You may wish to use a computer rather than a keypad for controlling the projector and for performing other special functions. From most computers, connect an RS-232 serial communication cable between the computer and the projector serial port labeled "NETWORK IN" (Figure 2-17). Then set the projector baud rate to match that of the computer. Changing the baud rate is described in *3.7, Adjusting and Checking System Parameters.*

*NOTE: In rare instances, some computers can provide **RS-422** serial communications. See **The RS-422 Port,** below.*

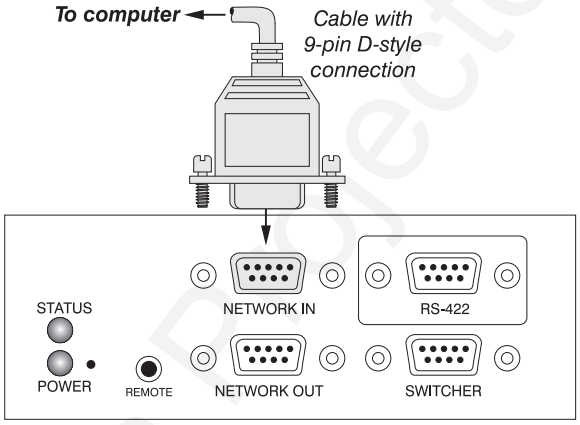

Figure 2-17. RS-232 Serial Port Connection to a Computer

Note: PC software is required for computer/serial control. Contact your dealer for details.

The RS-422 Port

Some computers can provide ***RS-422*** serial communications (usually through a plug-in adapter or external converter) rather than the RS-232 typically found on most computers. RS-422 communication has differential transmits and receives and is generally better suited for long distances than is RS-232 communication.

If you wish to control the projector with a computer having RS-422 capability, connect the computer to the projector's RS-422 port instead of the port labeled "NETWORK IN". Again, use RS-422 **only** if you are certain that your computer has RS-422 capability (consult your documentation). See Figure 2-18.

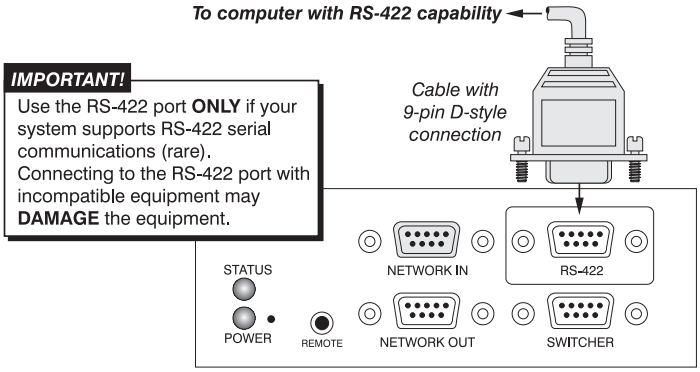

Figure 2-18. RS-422 Serial Port Connection to a Computer

Downloaded from Projector.com

IMPORTANT

Never use the RS-422 port unless you are using a computer with RS-422 capability. The higher voltage level of this signal could damage incompatible equipment.

If your computer has a 6-pin XLR connector instead of a 9-pin D connector, or if you are using the optional *VistaGRAPHX 2-Way Controller*, connect to the XLR jack on the right front panel of the projector, just under the lens.

NOTE: You cannot use two RS-422 connections simultaneously. Connect to the 9-pin D connector ***or*** *the XLR jack, not both.*

If using a switcher ➤ You may wish to use one or more external *Marquee* switchers or third-party switchers in order to significantly increase the number of sources you can use. Connect an RS-232 serial communication cable between the switcher and the projector serial port labeled "SWITCHER" (Figure 2-19). This port is permanently set at 9600 baud.

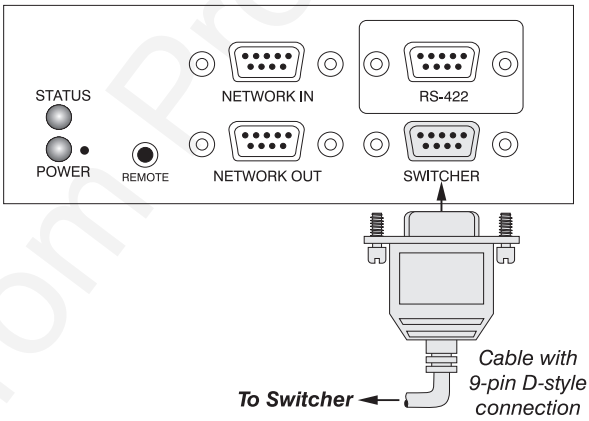

Figure 2-19. RS-232 Serial Port Connection to a Switcher

If using multiple projectors ➤ To control multiple projectors with a computer/controller, chain the projectors together by connecting the "NETWORK OUT" connector of the first projector (already connected to the computer/controller) to the "NETWORK IN" connector of the next projector in the chain (Figure 2-20).

Downloaded from Projector.com

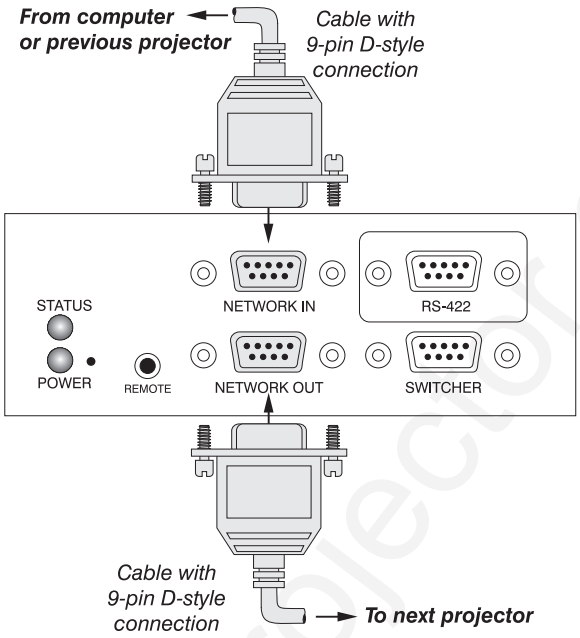

Figure 2-20. Adding Another Projector

Continue connecting projectors in this way to the last projector in the chain, so that only the last projector has an empty "NETWORK OUT" connector. See Figure 2-21.

Communication parameters such as baud rate must be set to match the particular controlling device—refer to the documentation that came with the controlling device in order to determine the proper baud rate. See *3.7, Adjusting and Checking System Parameters* if you need help changing the projector baud rate from its default of 9600.

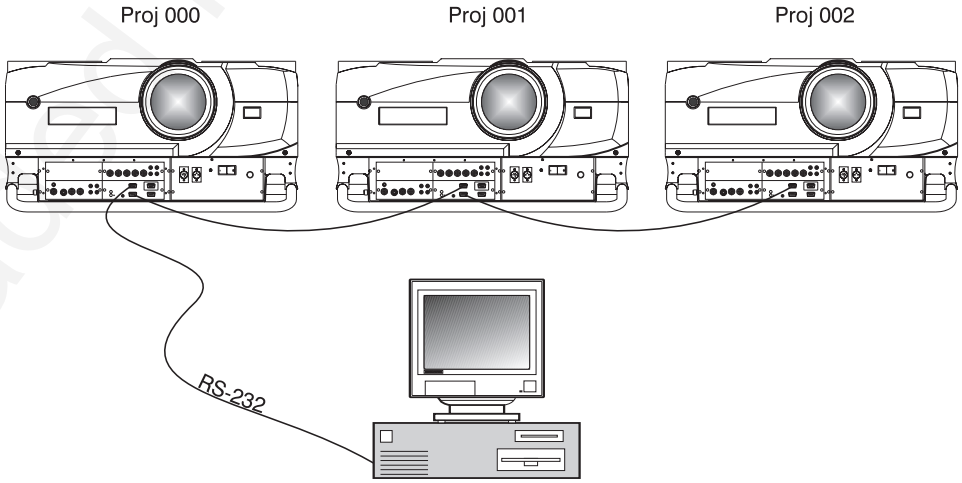

Figure 2-21. Three Networked or "Chained" Projectors

Notes: ***1)*** *To avoid damage, connect only properly wired RS-232 serial communication cables. See Appendix D for details.* ***2)*** *It is recommended that each communication cable be no more than 25 feet in length.*

Downloaded from Projector.com

Projector Number ➤ Each projector can be assigned a unique 3-digit projector number (for example, 001). These numbers are particularly useful when you are working with multiple linked projectors, enabling you to direct commands to a certain projector rather than broadcast to all projectors. For complete information on how to assign projector numbers, see *3.7, Adjusting and Checking System Parameters*.

2.10 Keypad Protocols

At manufacture every keypad is assigned a default protocol, which is simply a collection of settings that determine how the keypad operates. Once assigned, this protocol remains in effect until it is changed — that is, the keypad will operate as it currently does until you change its protocol.

Protocols are most useful for multiple-projector applications. For example, you might want to change a keypad protocol if you are working with two projectors and two remote keypads in the same room and need to control each projector independently (Figure 2-22). When Keypad A has a different protocol than Keypad B, each keypad communicates *only* with the projector having a matching protocol. Or, if you have a network of two or more projectors connected together via RS-232 serial ports, you may want only certain projectors to respond to a wired keypad.

NOTE: Matching the protocol on the projector to that of a keypad is done through a setting in the VistaGRAPHX 10K Preferences menu. See ***3.7, Adjusting and Checking System Parameters*** *for further information on how to change the projector's infrared sensor (rear and front) protocol.*

A protocol for either type of remote keypad — IR or wired — can be changed through software commands entered on the keypad. A new protocol set through software commands remains in effect until the keypad batteries are removed and replaced (if an IR remote), or until the keypad is unplugged (if a wired remote). A remote can also be changed manually —you can "hard-wire" new jumper settings inside the keypad so that they remain in effect until you change the hard-wiring. Note that a hard-wired protocol can be temporarily overridden by the software protocol change, effective until the keypad is unplugged and plugged in again (if a wired remote) or until a battery is removed (if an IR remote).

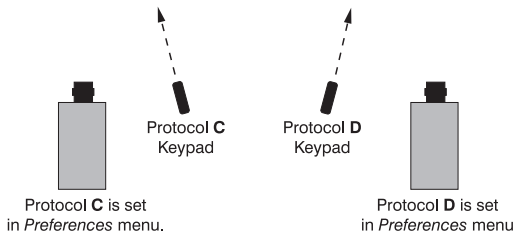

Figure 2-22. Independent Keypads and Projectors

Downloaded from Projector.com

Remote Keypad Protocol
— IR OR WIRED KEYPAD —

The standard IR remote keypad or the optional wired remote can be set to one of two different protocols — "C" or "D". To hard-wire a protocol to "C" or "D" in either remote, follow Steps 1 through 5:

Step 1

Unplug the keypad from the projector (applies to wired remote only).

Step 2

Unlatch and open the empty battery compartment on the back of the keypad as shown in Figure 2-23.

NOTE: A wired keypad will open as shown, but there will be a cable passing through the battery compartment cover.

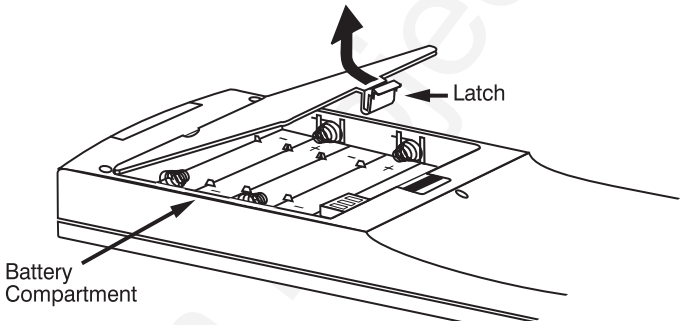

Figure 2-23. Opening the Keypad

Step 3

Find the 4 jumpers located along the latching side of the battery compartment. These jumpers set the keypad protocol and other settings so that the keypad functions in a certain manner.

Step 4: Set the Jumpers

Set the jumpers as shown in Figure 2-24. Take care to refer to the correct part of the drawing — IR or wired (optional). Use tweezers or needle-nose pliers to remove and replace each jumper as necessary.

- **J1** jumper: For either remote, set between pins 1 and 2 to set as Protocol "C". Set between pins 2 and 3 to set as Protocol "D".
- **J2** jumper: For either remote, set between pins 2 and 3 as shown; otherwise, the projector will not respond correctly to keypad commands.
- **J3** jumper: For the IR remote, make sure that the jumper is set between pins 2 and 3 as shown. For the wired remote, make sure that the jumper is set between pins 1 and 2 as shown.
- **J4** jumper: For the IR remote, make sure that the jumper is set between pins 1 and 2 as shown. For the wired remote, make sure that the jumper is set between pins 2 and 3 as shown.

Step 5

Replace battery compartment cover. Plug into projector (wired keypad only) and test.

Downloaded from Projector.com

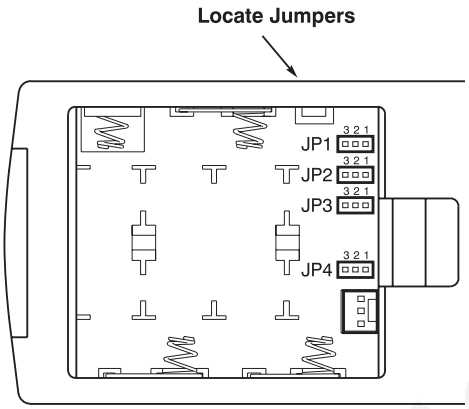

IR Remote Keypad:

JP1	3 2 1 = PROTOCOL **C** *-or-* 3 2 1 = PROTOCOL **D**
JP2	3 2 1 (ALWAYS)
JP3	3 2 1 ENABLE IR
JP4	3 2 1 IR KEYPAD

Wired Keypad:

JP1	3 2 1 = PROTOCOL **C** *-or-* 3 2 1 = PROTOCOL **D**
JP2	3 2 1 (ALWAYS)
JP3	3 2 1 DISABLE IR
JP4	3 2 1 WIRED KEYPAD

Figure 2-24. Locating and Setting the Jumpers

NOTE: Although they are similar, a VistaGRAPHX 10K wired keypad cannot be converted into an IR remote keypad, nor vise versa.

SHORTCUT METHOD:

You can also issue software protocol settings through the keypad. These software commands will be lost when the keypad is either unplugged or when a battery is removed — the keypad will revert back to the hard-wired jumper settings (see above) until you enter the software commands again.

Press [Input1] [Color] [Pixel] [Position] [1] = Protocol "**C**"

Press [Input1] [Color] [Pixel] [Position] [2] = Protocol "**D**"

NOTE: If you change any keypad to a new protocol and the projector stops responding, the projector may be set to a conflicting protocol. Use the projector's built-in keypad to access the ***Preferences*** *menu. Under "Front IR Keypad" or "Back IR Keypad" or "Wired Keypad", select the protocol that matches the new protocol of the keypad at hand. The projector should now respond properly.*

Downloaded from Projector.com

Downloaded from Projector.com

Section 3

Operation

3.1 Overview

This section explains how to use the *VistaGRAPHX 10K* projector once it has been installed. Please read through these pages before using the projector for the first time. An understanding of *VistaGRAPHX 10K* features and how to access them will help you to take full advantage of the capabilities of the projector within minutes. Organization of this section is as follows:

3.1 Overview ..... pg. 3-1
3.2 Projector Basics ..... pg. 3-1
3.3 Using the Keypad ..... pg. 3-5
3.4 Navigating the Menus ..... pg. 3-12
3.5 Using Inputs and Channels ..... pg. 3-17
3.6 Adjusting the Image ..... pg. 3-21
3.7 Adjusting and Checking System Parameters ..... pg. 3-33
3.8 Using Multiple Projectors ..... pg. 3-39
3.9 Error Conditions ..... pg. 3-40

NOTE: Installation involves locating the projector and adjusting it for use at that location. If you have not yet installed the projector, refer to ***Section 2, Installation and Setup****.*

3.2 Projector Basics

Most *VistaGRAPHX 10K* functions and adjustments are entered through keypad commands that either control the projector directly or activate a system of intuitive menus. Variations in settings can be defined and retained in the projector's internal memory as a custom *channel*, with up to 99 different channels possible. Focus, lens offset, shutter, and (with applicable ILS® lenses) motorized zoom can also be controlled and recalled from a remote location. Main projector components are shown on the following page.

Downloaded from projector.com

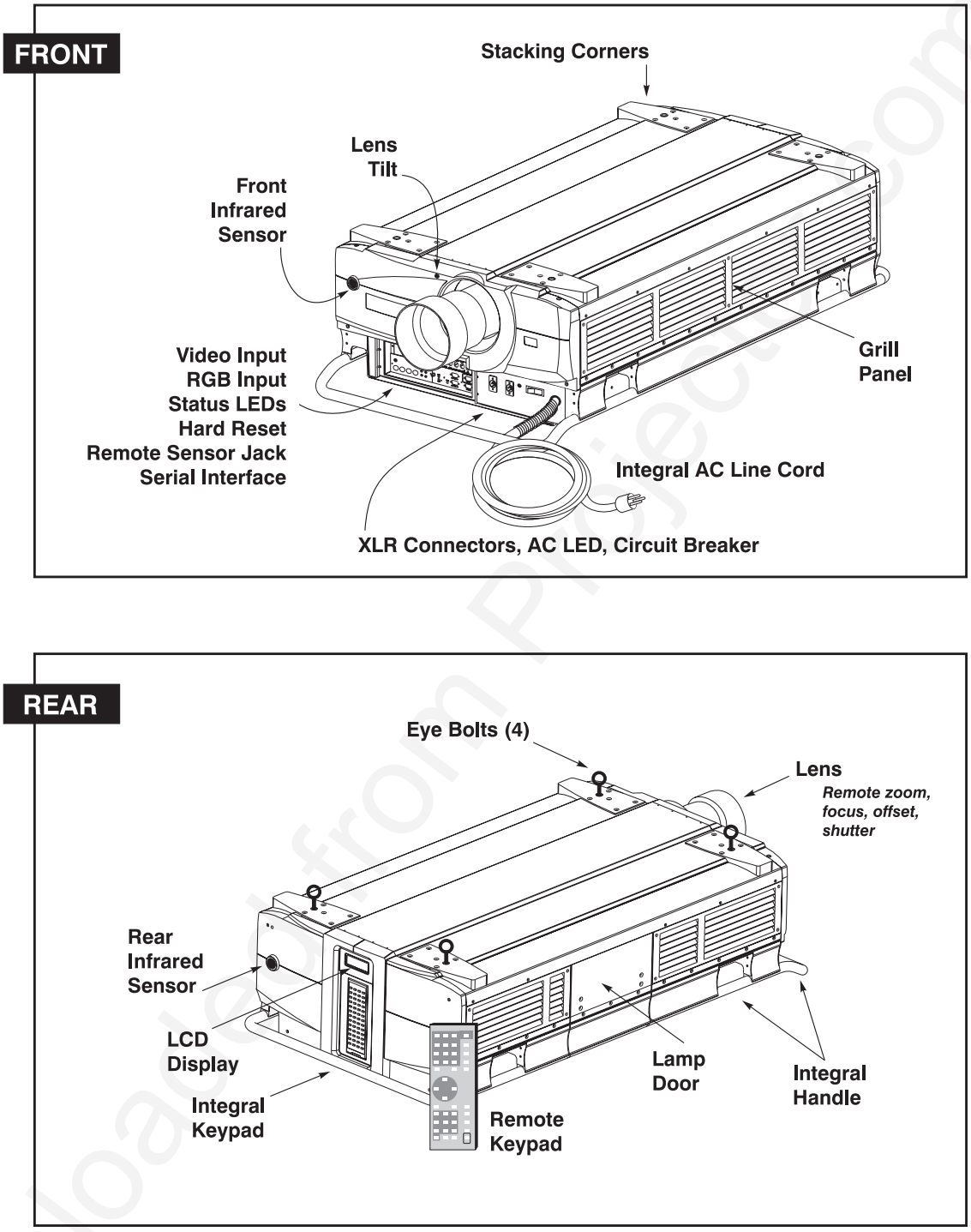

Figure 3-1. VistaGRAPHX 10K, Projector Components

Components ➤
(See Figures 3-1 and 3-2)

REMOTE CONTROL ZOOM - Accessed through the keypad, the lens barrel of a *VistaGRAPHX* ILS® zoom lens (optional) rotates to adjust the size of the image at the current throw distance (projector-to-screen distance). Minimum and maximum image sizes depend on which zoom lens is installed — see *Section 5, Specifications.* To adjust zoom manually, remove the zoom adapter collar (see *Section 4, Maintenance*).

Downloaded from Projecta.com

REMOTE CONTROL FOCUS - Accessed through the keypad, focus adjusts the sharpness of the image at the current throw distance.

REMOTE CONTROL LENS OFFSET - Accessed through the keypad, horizontal and vertical offsets shift the lens to move the image. See *Section 2, Installation and Setup* for the offset ranges for any given lens.

LENS TILT ADJUSTMENT - Accessed through the front bezel of the projector, this adjustment allows the lens to be tilted slightly in its mount.

REMOTE CONTROL SHUTTER - Closing the shutter closes the lens and blocks the image. The shutter is controlled through the keypad.

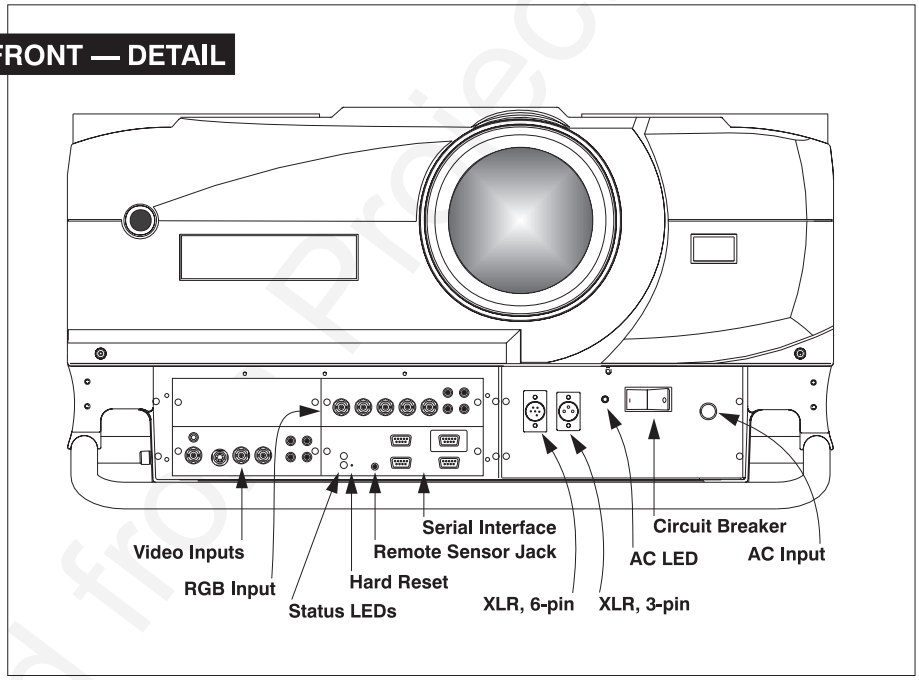

Figure 3-2. Detail of Front Panel

COMPOSITE/S-VIDEO INPUT - Accepts a composite video and S-Video signal from devices such as VCRs.

RGB INPUT - Accepts RGB and sync signals from devices such as computers.

SERIAL INTERFACE (WITH LOOP THROUGH) - Allows one or more projectors to be remotely controlled by a computer or controller, and provides a communications connection for *Marquee* and third-party (e.g., Extron) signal switchers.

⚠ ***AC LINE CORD INPUT -*** Integral 30 amp AC line cord. The projector requires AC power of 220 to 240 VAC, 50 to 60 Hz @ 12 amps.

⚠ WARNING:
Do not attempt operation if the AC supply is not within the specified voltage and power range.

Downloaded from Projector.com

STATUS LEDS - Two LEDs (light emitting diodes) located to the right of the Video Input Panel indicate "Status" (top) and "Power" (bottom). During normal operation, the "Power" light is steady green and the "Status" light flashes green each time a key is pressed or when the projector receives a serial command. Use the following as a guide:

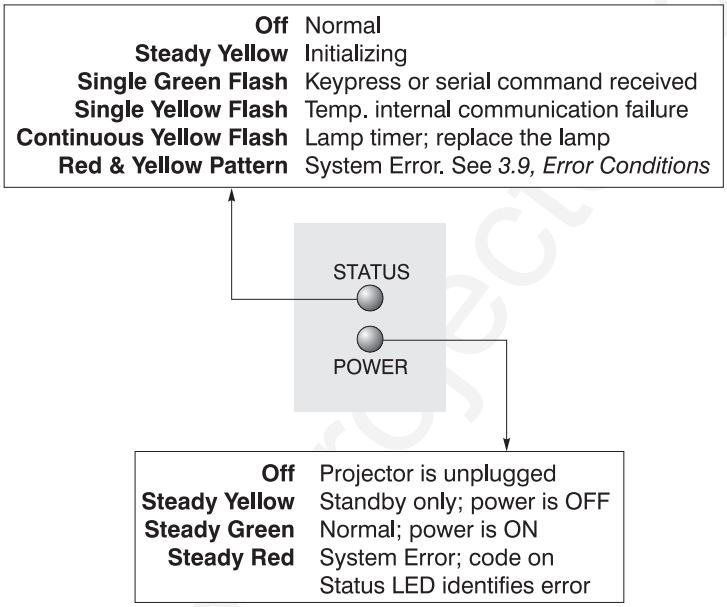

NOTE: A steady red power light accompanied by a coded pattern of red and yellow flashes from the status light indicates an internal system error. Consult the rear LCD display for an explanation. Should the problem persist, contact a qualified service technician through your dealer or at Electrohome.

AC LED - Indicates whether or not the projector is receiving proper AC current (20 amps maximum). This LED should be **On** (green) whenever the projector is plugged in. If it goes off during operation, this indicates that the projector received more than 20 amps of current and that the projector's circuit breaker triggered an automatic shutdown of the projector.

REMOTE KEYPAD - Standard keypad for tethered remote control of the projector.

INTEGRAL KEYPAD - Alternative location for entering commands.

LCD DISPLAY - Feedback for monitoring projector activities and status.

INFRARED SENSORS - The infrared (IR) sensors on the front and rear of *VistaGRAPHX 10K* receive infrared signals from the IR keypad for remote control of the projector. For proper operation make sure that these sensors are not blocked.

REMOTE SENSOR JACK - For adding another IR sensor.

⚠ ***SAFETY CIRCUIT BREAKER -*** Detects faulty or excessive AC and automatically shuts down the projector to prevent damage. During normal operation, the rocker switch should be in the **On** position and the adjacent LED

will be green. If it moves to the **Off** position, the projector will power off — restart by first moving the breaker back to the **On** position, then try powering up as usual. If the breaker continues to "trip" (moving to **Off**), the projector will remain inoperable until the AC problem is corrected. Never use the circuit breaker as an **On**/**Off** switch.

XLR CONNECTORS - 3-pin and 6-pin. For connecting the optional wired remote keypad (3-pin) or optional Two-Way controller (6-pin).

HARD RESET - Emergency access for powering down the projector in the event of a system failure. Insert pen point or small screwdriver.

INTEGRAL HANDLE - For hoisting (side handles only) or hand transport of the projector.

STACKING SUPPORTS - For secure stacking of projectors on the floor (maximum of three high).

WARNING

Stack FLOOR-MOUNT projectors only.

EYE BOLTS - For safe hoisting / installation of the projector. Attach with at least 20 in. lb. torque.

LAMP DOOR - For accessing the lamphouse assembly, such as for replacement.

INTAKE GRILL - Louvered area for air intake. Remove to replace 2 air filters.

3.3 Using the Keypad

The *VistaGRAPHX* keypad appears in three locations:

- ***Built-in*** to the rear of the projector
- ***Infrared (IR) Remote*** for tetherless control
- ***Wired Remote*** (optional) tethered to the front of the projector

While each keypad is identical in layout and provides complete control of the projector, you may find one keypad more convenient than another for your specific installation and application.

NOTE: For extra long distances and/or harsh environments, you may prefer to use an optional remote VistaGRAPHX 2-way Controller to control the projector. For operating details, please see the ***2-Way Controller User's Manual*** *included with the controller.*

Downloaded from Projector.com

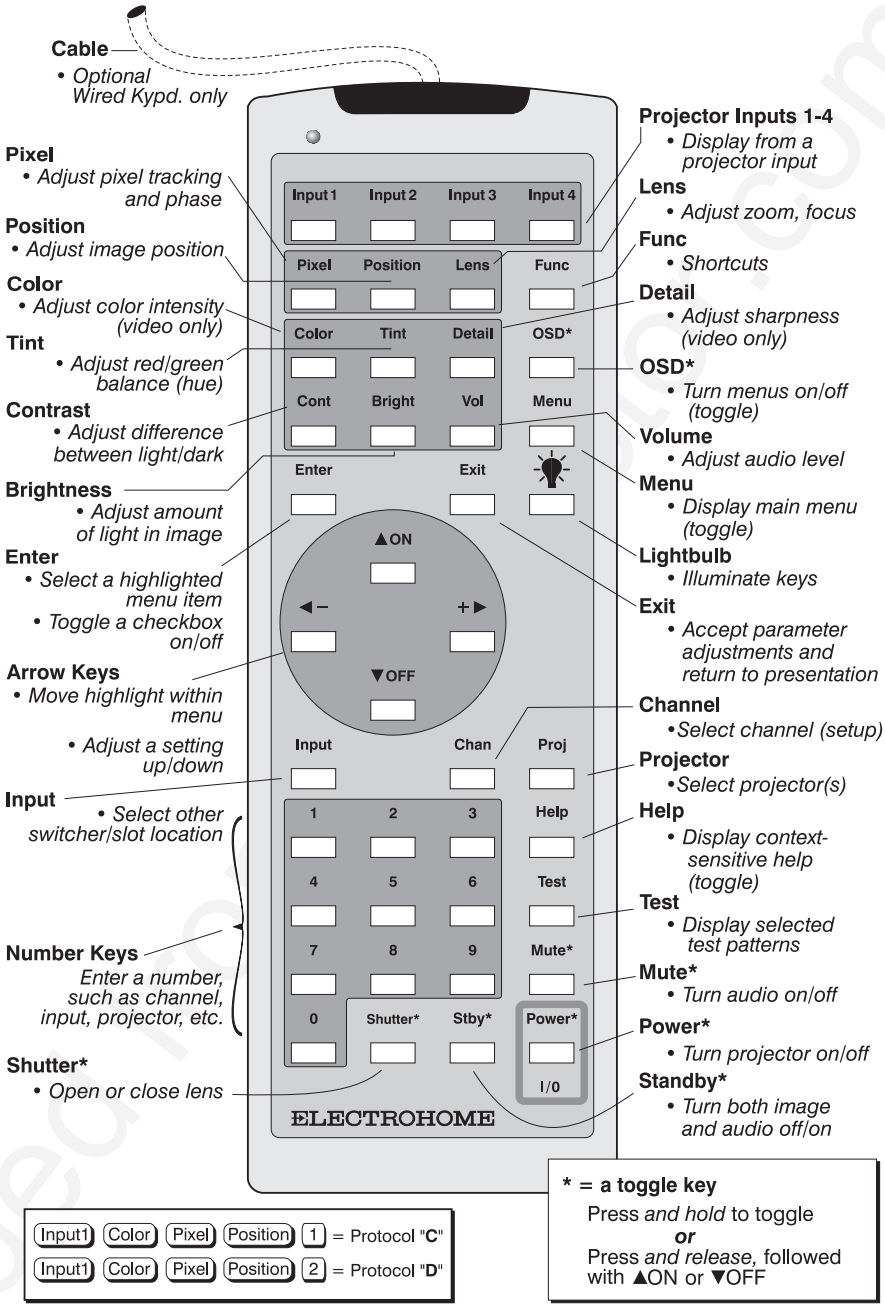

Figure 3-3. Keypad

Built-in ➤ This keypad is located at the rear of the projector. An LCD window above this keypad provides feedback regarding current status and activities of the projector.

IR Remote ➤ The IR Remote Keypad controls the projector by way of wireless communications from a battery-powered infrared (IR) transmitter. Use the IR remote keypad the same way you would use a remote keypad supplied with a TV or VCR. When making key presses, point the keypad either toward the screen or toward the front or rear of the projector. One of two sensors on the projector will detect the signals and relay the commands for internal processing.

Wired Remote —OPTIONAL— ➤ The wired remote keypad connects to the front 3-pin XLR jack via a 50 ft. extension cable. It is recommended when:

Downloaded from

- the rear of the projector is inaccessible
- the lighting conditions are unsuitable for proper IR transmission
- you want to use a separate keypad for each projector in a group

Guide to Keypads ➤ Keep in mind the following guidelines:

1) Press keys one-at-a-time; there are no simultaneous key presses required.
2) For any key having an "*" (Power*, for example), hold the key for a second or two in order to toggle the function with a single key press. For other keys (or to use a "*" key in conjunction with ▲ON or ▼OFF), a momentary press similar to a mouse click is sufficient.
3) Press the "lightbulb key" for approximately one second to temporarily illuminate the backlight for the keys without sending any other command.
4) ◄–, +►, ▲ON , and ▼OFF repeat their "arrow" actions when held down. For other keys, release and press again to repeat an action.
5) If you press a key while the projector is busy with another action, such as during a power-up, the key press may not take effect.

When you turn on the projector it begins operating at *presentation level*, such as an image from the most recently used source signal. The projector temporarily leaves presentation level whenever you use the keypad to work with control settings, display menus, or on-line help. For example, pressing Menu after startup displays the main menu — presentation level is no longer active, although the image continues to be displayed in the background. Press Menu again (or Exit) to return to presentation level.

Keypad Commands ➤ Specific keypad commands are explained below:

Power* ***Power ON/OFF***

Press and hold for a second or two to turn the projector on or off with a single key press. Or press Power* followed immediately by ▲ON or ▼OFF if you want to guarantee the correct toggle (useful if you are unsure of the present status).

NOTES: ***1)*** *Whenever the projector is turned off, the lamp cooling fans remain on for about five minutes to cool the lamp sufficiently.* ***Do not unplug the projector unless the lamp cooling fans have shut off****.* ***2)*** *It is a good idea to avoid turning a projector back on until it has been off for at least five minutes. Hot re-strikes of the lamp may reduce lamp life.*

Input1 ***Input 1***

Press Input1 to select the input connected to **INPUT 1** on the projector (data input). This is the same as entering Input 0 1 .

Input2 ***Input 2***

Press Input2 to select the input connected to **INPUT 2** on the projector (an optional interface). This is the same as entering Input 0 2 .

Input3 ***Input 3***

Press Input3 to select the input connected to **INPUT 3** on the projector (composite video). This is the same as entering Input 0 3 .

Downloaded from Projector.com

Input4 Input 4

Press Input4 to select the input connected to **INPUT 4** on the projector (S-Video). This is the same as entering Input 0 4 .

Input Input

Press Input n n when you want to display from a specific source location, such as a switcher connected serially to the projector's switcher port. The first digit represents the switcher number (usually 1-9, or "0" for one of the four inputs on the projector), the second digit represents the slot number (1-9). For example:

Input 1 2 = display data from switcher 1, slot 2.

NOTES: 1) Although you don't need to use the input key unless a switcher is connected to the projector, you can also use Input *to access the four input "slots" on the projector itself: use* 0 *as the first digit (representing the projector as the switcher), then* 1, 2, 3 *, or* 4 *as the second digit (the desired input slot number).* 0 *in combination with higher numbers is an invalid entry. 2) See* ***3.5, Using Channels and Inputs*** *for a detailed explanation of inputs.*

Chan Channel

Press Chan to select a *channel* representing a specific source setup defined and stored in projector memory. Once you enter a channel number, the display will automatically update according to the setup parameters defined for that channel.

NOTE: Precise Chan *key behavior depends on which* ***Channel Selection*** *option (from within the* ***Preferences*** *menu) you have chosen for the* Chan *key. For example, you can choose to see a scrollable list of channels when you press* Chan*, or you may prefer to enter a one- or two-digit number channel number. To set up the* Chan *key, see* ***Preferences*** *later in this section.*

Stby* Standby

Press Stby* and hold for a second or two to blank the display and mute the audio output while keeping the projector in a warmed-up and ready state. Or quickly press and release Stby* and follow immediately by ▲ON or ▼OFF if you want to guarantee the correct toggle (useful if you are unsure of the present status). Note that all electronics remain ON in standby mode, even though lamp power reduces to a minimum and the image turns to black. To leave standby press and hold Stby* again (or use Stby* ▼OFF). Or simply press Exit.

Menu Menu

Press Menu to display the main menu. A list of seven numbered options and icons appears for access to specific functions, such as *Channel List* or *Size / Position*. Press Menu again (or Exit) to return to presentation level.

Enter Enter

Press Enter to select a highlighted item, toggle a checkbox (checked vs. unchecked), finish with a double slidebar, or accept a parameter adjustment and return to the previous menu or image.

Exit Exit

Press Exit to save most parameter adjustments and return to presentation level.

Downloaded from Projector.com

*NOTE: [Exit] does **not** save changes within text editing boxes or pull-down lists.*

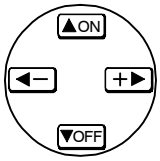

Arrow Keys

Use the [▲ON] or [▼OFF] keys to navigate within a menu or pull-down list or to increase or decrease the value in the second (bottom) slidebar of a double slidebar. Use [◄–] or [+►] to change all other slidebar values — hold as desired for continuous scrolling. Also use [◄–] or [+►] to jump between "pages" in a long pull-down list.

[▲ON] *or* [▼OFF]

Use [▲ON] or [▼OFF] in conjunction with certain *toggle* keys—those labeled with an asterisk—to ensure a toggle *only* in the desired direction. When turning the projector on, for instance, you may be too far from the projector to know whether it is really off or if the shutter is just closed. If you press [Power*] and simply hold it for a second or two in hopes of turning the projector *on*, the projector will turn *off* if the projector is actually already on. Instead, to avoid the risk of toggling in the wrong direction, quickly press *and release* the function key you wish to toggle (in this case [Power*]). Then immediately (within 2 seconds) press either [▲ON] or [▼OFF] as desired. The specific toggle will occur.

Toggle keys are labeled with an asterisk on the keypad. They are listed below:

- [Shutter*] + [▲ON] = close the shutter (dowser)
  [Shutter*] + [▼OFF] = open the shutter (dowser)
- [Stby*] + [▲ON] = put the projector in standby mode
  [Stby*] + [▼OFF] = leave standby
- [Power*] + [▲ON] = turn the projector on
  [Power*] + [▼OFF] = turn the projector off
- [Mute*] + [▲ON] = turn the audio on
  [Mute*] + [▼OFF] = turn the audio off
- [OSD*] + [▲ON] = turn the menu system on
  [OSD*] + [▼OFF] = turn the menu system off

[Color]

Color

Press [Color] to adjust the color saturation level, or the amount of color in a video image. Lower settings produce less saturated colors — a setting of "0" produces a black and white image, for example. If the color level is too high, colors will be overpowering and unrealistic. Use [◄–] and [+►] until the desired color saturation level is displayed.

[Tint]

Tint

Press [Tint] to adjust the red/green color hue for true color reproduction of NTSC video signals. For best results, adjust tint while displaying a proper test pattern — otherwise, it is recommended that tint remain at its default setting. Use [◄–] and [+►] until the desired tint is displayed.

[Detail]

Detail

Press [Detail] to adjust the sharpness of a video image. Use [◄–] and [+►] until the display is as sharp as desired, keeping in mind that any level of detail above 50%

Downloaded from Projector.com

will also introduce some level of noise in the image. Set below 50% to filter the signal and remove noise from a noisy source.

Cont Contrast

Press Cont to increase or decrease the difference between light and dark areas of your image. Use ◄− and +► until you reach the desired level of contrast, making sure that the whites remain bright but not distorted or tinted.

Bright Brightness

Press Bright to increase or decrease the amount of perceived light in the image so that black just changes to very dark gray. Use ◄− and +► until you reach the desired level. See *3.6, Adjusting the Image (Image Settings* subsection).

Vol Volume

Press Vol to control the audio level. Use ◄− and +► until you reach the desired volume.

Proj Projector

Press Proj to display an editable box indicating which projector is currently listening to the keypad. The number that appears will match what has been defined in the *Preferences* menu.

To use a certain projector, enter the 3-digit number assigned to the projector you want to use, or use ◄− and +► to scroll. Press Enter to select. Press Exit to cancel.

To broadcast to multiple projectors, press Proj and then Func ***without*** entering a projector number. Keypad commands will then affect all projectors present.

NOTES: 1) The "Broadcast Keys" option in the Preferences menu must be selected for only ***one*** *projector in a serial network. The keypad in use must be OFF (disabled) for the remaining projectors. See* ***2.10. Keypad Protocols****, and* ***3.7, Adjusting and Checking System Parameters.***

Pixel Pixel

Press Pixel to access the pixel tracking and pixel phase double slidebar. Use ◄− and +► to increase or decrease the frequency of the pixel sampling clock to correct the proportion of the image. Use ▲ON and ▼OFF to increase or decrease pixel phase so that any shimmer disappears and the image is stable throughout. See *3.6, Adjusting the Image (Image Size / Position* subsection).

Position Position

Press Position to move the image up, down, right, or left using the double slidebar. Use ◄− and +► to move the image left or right, use ▲ON and ▼OFF to move the image up or down.

Lens Lens

Press Lens to access the 2 double slidebars focus/zoom and horizontal/vertical lens offset in the *Lens* menu. Use ▲ON and ▼OFF to adjust the image sharpness or

Downloaded from Projector.com

to shift the image up or down. Use [◄−] and [+►] to zoom in and out (requires zoom lens) or to shift the image slightly left or right. Note zoom range is 3-97.

[Shutter*]

Shutter

Press and hold [Shutter*] for a second or two to toggle the mechanical lens shutter (dowser) closed or open with a single key press. Or quickly press and release [Shutter*] and follow immediately with [▲ON] or [▼OFF] if you want to guarantee the correct toggle (useful if you are unsure of the present status). Close the shutter whenever you want to mute all display yet maintain access to all projector functions. Open the shutter to regain the display.

NOTES: 1) Like standby, closing the shutter automatically reduces internal light to a minimum so that heat doesn't build up inside the projector. 2) The status of the shutter is shown in the LCD window on the rear panel of the projector.

[Mute*]

Mute

Press and hold [Mute*] for a second or two to toggle the audio on or off with a single key press. Or quickly press and release [Mute*] and follow immediately with [▲ON] or [▼OFF] if you want to guarantee the correct toggle (useful if you are unsure of the present status).

[Func]

Function Key

From presentation level, press [Func] followed by a 2-digit number to access any of the projector's resident test patterns. For example, [Func][8][4] will display a 128-step grayscale pattern, or [Func][8][0] will display a scrollable list. A list of test common pattern codes appears on the back of the IR remote keypad and in the *Service* subsection later in this manual.

You can also use [Func] followed by a special 2-digit number to directly access certain options in the *Size / Position* or *Image Settings* menus — this will enable a second method for adjusting the option immediately, without going through the menu system. For example, to toggle the VCR option: press [Func][5][0]; to stop an *ILS*™ adjustment immediately: press [Func][5][3] .

To broadcast to all projectors in a network, press [PROJ] [Func].

NOTES: 1) Once [Func] is pressed in presentation level, the projector will not respond to non-numeric entry until 2 digits have been entered or until 5 seconds of inactivity have elapsed. 2) Certain engineering codes will freeze an image or display an unfamiliar menu or image. Should you accidentally select one of these special codes after pressing [Func], press [Exit] to cancel the function and return to presentation level.

[OSD*]

OSD (On-screen display)

Press and hold [OSD*] for a second or two to toggle menus and test patterns on or off (i.e., visible or invisible). Or press [OSD*] followed immediately by [▲ON] or [▼OFF] to guarantee the correct toggle direction (useful if you are unsure of the present status). Note that invisible menus are fully functional.

Downloaded from Projector.com

NOTES: 1) With OSD on, you can still mute menus, error messages, slidebars, etc. with the appropriate setting in the Preferences menu. 2) The status of the [OSD*] *key is displayed in the LCD window on the rear panel of the projector.*

[Help] *Help*

Press [Help] for detailed information about any current menu and highlight. Press [Help] again to exit. From presentation level, press [Help] to access the *General Help* menu consisting of *Using Help, Projector Setup, Keypad, Channel Selection* and *Status LEDs.* Press [Exit] to leave *General Help* and return to presentation level.

[Test] *Test*

Press [Test] to display one of five selected test patterns. Press [Test] again to display the next pattern in this sequence, and so on. [Test] will exit after the fifth pattern, or press [Exit] at any time to remove the current test pattern from the screen.

NOTE: For a complete list of all test patterns, including those accessed through the [Func] *key, see* ***Service*** *later in this section.*

Keypad operating settings (protocols)

The remote keypad and the optional wired keypad both store keypad operating settings (called *protocols*) in memory. In some advanced applications, such as when you want to use two separate keypads to control two projectors independently, you may want to override the original protocol (called "C") set at manufacture for one of the keypads. See section *2.10, Keypad Protocols* for complete instructions on changing protocol.

3.4 Navigating the Menus

Most of the controls for the projector are accessed from within the *VistaGRAPHX 10K* menu system. There are seven groups of related functions in all, with each group selectable from the main menu as shown in Figure 3-4. Press [Menu] at any time to display the *Main* menu list. The menu icons for *Size / Position, Image Settings, Channel List, Communications, Preferences, Status* (primarily read-only), and *Service* (password protected) appear in a numbered list:

Downloaded from Projector.com

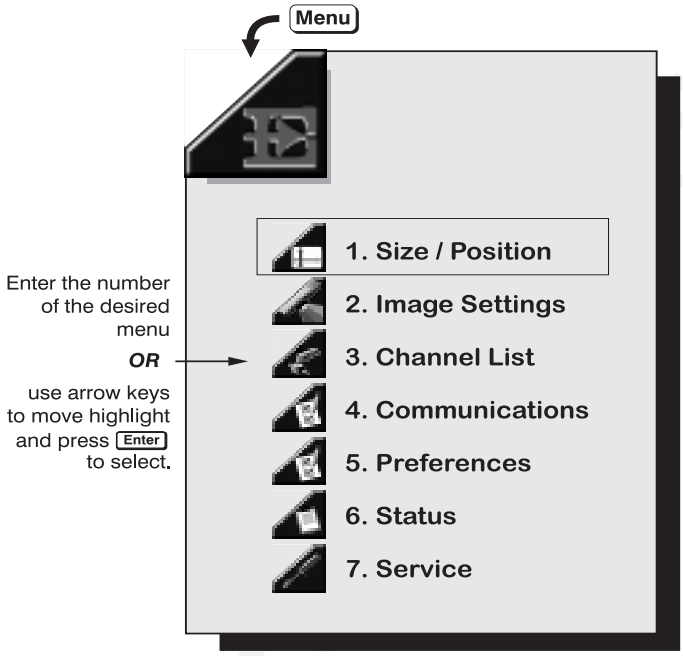

Figure 3-4. Main Menu

On the keypad, either enter the number corresponding to the function menu you wish to access, such as 2 for the *Image Settings* menu, or use the ▲ ▼ keys to highlight the desired icon and press Enter. The function menu you selected will then appear.

Once you have a function menu displayed, navigate in a similar manner—enter a menu option number for any numbered option, or use ▲ ▼ to move the highlight and press Enter. Items that are locked out or do not pertain to the current action appear dimmed and cannot be selected. If there is no signal present, all source-dependent adjustments are disabled. Also note that after 15 minutes of inactivity, the projector returns to presentation level.

When finished with a function menu, do one of the following:

- Press Exit to save all and return to your image.
- Press Menu to save all and return to the *Main* menu.

On-line Help ➤ If at any time you are uncertain about a menu, press Help to display detailed information about the current menu and any highlighted item. A scroll bar appears on the right-hand side of a help window if there is additional text — use the arrow keys to scroll (Figure 3-5). Press Help again to exit.

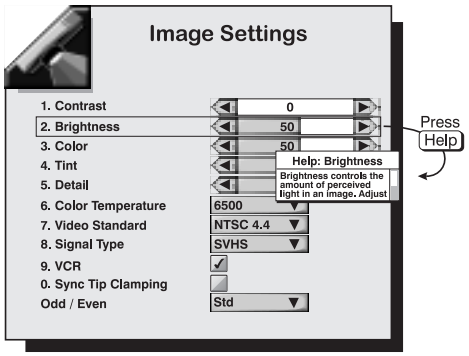

Figure 3-5. Context-sensitive Help.

NOTE: 1) While Help is

displayed, the arrow keys still operate any current slidebar or pull-down list in view, such as "Brightness" or "Color Temperature".

From presentation level, press Help to access *General Help* information. Press Exit to return to presentation level.

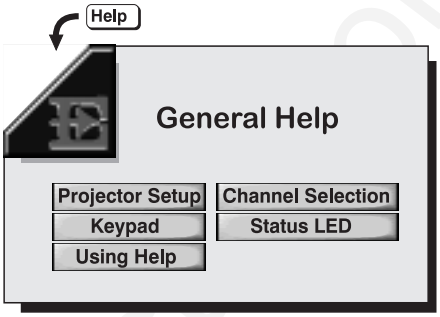

Figure 3-6. General Help (from Presentation Level)

Time-outs ➤ Whenever the projector is not at presentation level, such as when there is a slidebar, menu, message or test pattern displayed, you have limited time in which to make a keypad entry before the projector returns to presentation level. These time-outs vary depending on the current display, as shown in the following chart:

TIME-OUTS	
Display	**Time-out**
Slidebars (from pres.)	5 seconds
Slidebar (from menu)	15 minutes
Lamp Timer Msg.	30 seconds
Source entry	5 seconds
Direct control entry	5 seconds
Other	15 minutes

Using Slidebars and Other Controls ➤ Most of the seven function menus allow you to change settings by using slidebars, checkboxes, and pull-down lists. To select a slidebar, toggle a checkbox status, or view a pull-down list, do one of the following from the function menu:

- Enter the menu option number corresponding to the setting you wish to change (for example, press 5 to select Left Blanking).
- Or move the highlight to the desired parameter and press Enter.
- Or move the highlight and press ◄– or +► (slidebars).
- Or bypass the menus entirely and use the Func key to access immediately during your presentation (*note: applies to certain options only*).

Once selected, change the setting as desired (see below) and press Enter to save and return to the current function menu.

Slidebars - The current level for a given parameter such as brightness, contrast, vertical position, etc., appears in the center of the slidebar icon. This number usually expresses a percentage, or it may have units associated with it (such as pixels, degrees Kelvin, etc.). Press ◄– or +► to adjust the setting up or down — both the number and the size of the bar change accordingly. For double

slidebars, such as pixel tracking/pixel phase or horizontal/vertical position, press [Enter] to select, then [▲ON] or [▼OFF] to adjust the second slidebar setting (see below). Press [Enter] when done. For fast adjustment, hold down the desired arrow key.

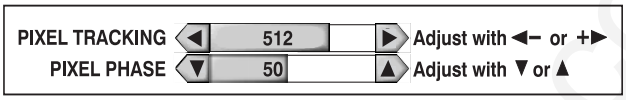

"Direct" Slidebars - For quick access, you can go directly to a slidebar (or double slidebar) without using the menu system. For example, simply press [Cont] to immediately display the same contrast slidebar accessed with the **Contrast** option in the *Image Settings* menu. All direct slidebars are listed below.

LIST OF DIRECT SLIDEBARS	
Horizontal or Vertical Position	[Position]
Pixel Tracking or Phase	[Pixel]
Left Blanking	[Func] [0] [8]
Right Blanking	[Func] [0] [9]
Top Blanking	[Func] [0] [6]
Bottom Blanking	[Func] [0] [7]
Contrast	[Cont]
Brightness	[Bright]
Color	[Color]
Tint	[Tint]
Detail	[Detail]

Use arrow keys to adjust a direct slidebar. Press [Enter] or [Exit] to save.

NOTES: 1) You can still adjust a direct slidebar as usual if the menu display is turned off (see [OSD] or **Preferences** menu) — the slidebar just won't be visible. 2) A direct slidebar disappears if it is not used within 5 seconds.*

Saving Adjustments - When you have finished with a slidebar, do one of the following:

- Press [Enter] to return to the previous level
- Press [Exit] to return to your presentation

Checkbox - Conditions listed next to a checkbox are present if the checkbox contains a checkmark. To toggle the checkbox, simply highlight and press [Enter], or use [+►] to check and [◄–] to uncheck. For any checkboxes that are numbered, simply enter the number of the option to toggle the checkbox.

Pull-down List - Highlight and press [Enter] to pull down a list of options (or enter the menu option number, if present). Use the [▲ON] or [▼OFF] keys to navigate up and down within the list. Press [Enter] to choose an option.

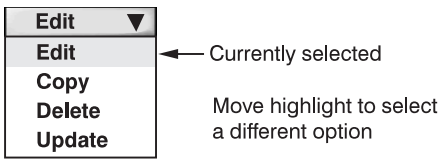

Downloaded from Projector.com

NOTES: 1) Press ◄– or +► to jump between "pages" in a long pull-down list. 2) Press Exit while in a pull-down list to cancel any change.

Editing Text ➤ To enter or edit text (such as a channel name), highlight the desired parameter and press Enter to bring up an edit window. Current text is displayed in the text box at the top of the menu. Selectable characters for editing are displayed in a large central character box, and other function buttons appear at the bottom. Navigate between all with the arrow keys as usual.

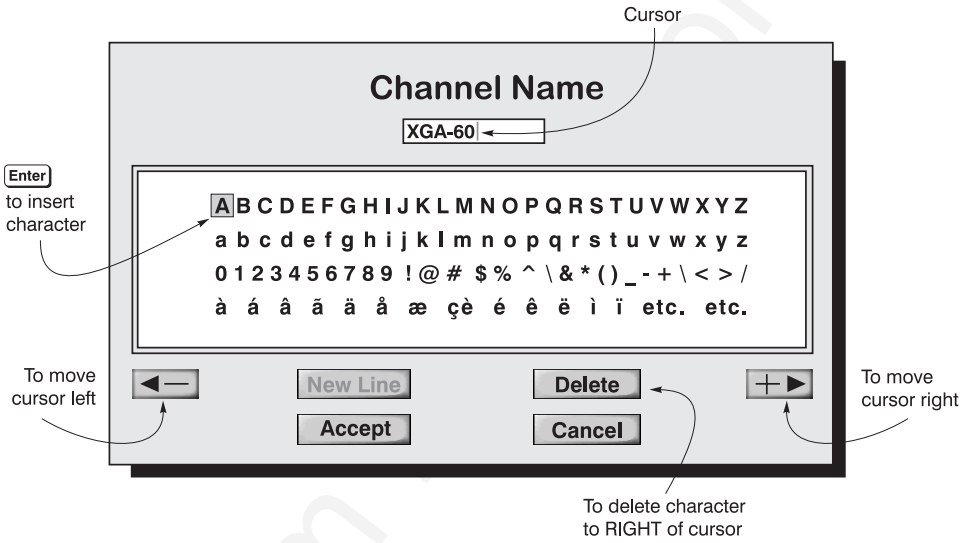

Figure 3-7. Editing Text, Such as "Channel Name"

NOTE: Entering a character while the current text is highlighted replaces all of the current text. Make sure you want to discard the original text before beginning, or press Exit at any time to cancel.

To Edit Text - In the large character box, use the arrow keys to move from character to character. Press Enter on keypad to select and insert the character in the text box at the top of the screen. The blinking vertical line in the indicates the insertion point for the text. Select the on-screen ◄– or +► keys to move the cursor left or right as necessary (highlight and press Enter).

To Delete Text - Select the on-screen "Delete" button to delete a character to the right of the insertion marker.

To Accept New Text - Highlight the on-screen "Accept" button and press Enter on the keypad.

To Cancel Text Editing - Highlight the on-screen "Cancel" button and press Enter on the keypad. "Cancel" ignores new edits and removes the edit window. Or press Exit at any time.

NOTE: The "New Line" button is not available. Text must fit on one line.

Downloaded from

Editing Numerical Values ➤

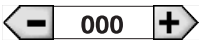

Enter numbers directly from the keypad in order to specify numbers representing projectors, sources (channels), switchers or slots.

NOTES: 1) Once you enter the first digit, the digit replaces all old digits. 2) If you press any non-numbered key, the number entered up to that point is accepted and updated as the new value. 3) Press [Exit] *to cancel editing.*

3.5 Using Inputs and Channels

NOTE: See ***Section 2, Installation and Setup****, for a full explanation of how to connect sources to the VistaGRAPHX 10K.*

VistaGRAPHX 10K stores and automatically recalls up to 99 different channels for a variety of inputs. This memory feature allows you to define and conveniently use a wide variety of customized setups rather than having to repeatedly re-configure the projector for different presentations.

Do I Select an Input or a Channel? ➤

INPUT - An input simply describes a physical location for an incoming signal connection. These connections are always either on the projector itself (one of the four inputs at the front of the projector) or on any switcher connected to the projector's switcher port. [Input] describes the source signal according to two criteria only — to which *switcher* it is connected and to which *slot* it is connected — and is represented by a 2-digit number entered on the keypad. The first digit specifies the switcher (0-9), the second specifies the slot (1-9). Note that the projector is always considered "switcher #0".

EXAMPLES:

[Input] [1] [3] = use source connected to switcher #1, slot #3

[Input] [0] [1] = use source connected to the projector, slot #1 (i.e., [Input1])

You can switch to an input in either one of two ways. Pressing the appropriate direct key — [Input1], [Input2], [Input3], or [Input4] — is a quick and seamless way to display from one of the four inputs at the front of the projector. Or, if your projector has a switcher connected to it at the **SWITCHER** port, press the general [Input] key and enter the 2-digit number representing the switcher and slot location for the desired signal (note there is no on-screen feedback).

Regardless of which method you use to select a source/input, the image will be displayed according to the following:

If it is the first time you have used the source/input (or if you used the input but did not adjust anything), the projector will recognize the input signal based on its frequencies and polarities, and will automatically display the image according to default settings for such a signal. It will resize as needed, producing an image as large as possible while maintaining the original aspect ratio.

If you used the source once before and changed a display parameter such as focus, contrast, etc., then a channel was created and still exists in projector memory (see below). Using an [Input] key will automatically recall this channel and update the display accordingly.

If more than one channel exists for the input, the image will be displayed according to the setup parameters for the first channel in the channel list.

Downloaded from Projector.com

CHANNEL - A channel is a collection of measurements and settings that tailor a display to your specific needs. Since source types and applications vary greatly, you will likely want to adjust and define a wide variety of parameters, such as brightness, contrast, tint, etc., in order to customize and maximize the display coming from that source. For example, the display settings you choose for a VCR source may be very different from those you choose for a high resolution computer source, or one signal may vary from another used earlier through the same input location. Once you have adjusted a display parameter, such as zoom, focus, or pixel tracking, all current settings are collectively stored in the projector's memory as a unique 2-digit channel, such as 9 9. You can have numerous distinct channels to select for the same input, any of which can be used by using the Chan key on the keypad.

*NOTE: The precise function of the Chan key is flexible and depends on how you have defined it from within the **Preferences** menu (see **Preferences** later in this section). Shown at right is an example of a channel list from Chan.*

01
02
03 XGA 60 R
97
98 PAL/SECAM

In order to use channels (Chan on the keypad), you must first create them. See below.

Creating a New Channel — AUTOMATIC —

➤ To use a new source with *VistaGRAPHX 10K*, a new channel must be added to your system so that the projector will respond properly to input from that source in the future. A new channel can be created automatically, which is the easiest, or you can use the "New" button in the *Channel List* menu.

A channel is automatically created when an input signal is sent to the projector for display and you then change a parameter (such as adjusting brightness, etc.). The "channel#" assigned to an automatically created channel will be the highest available number from 99 down. Note that automatic channels do *not* appear by default in any channel list that may appear whenever you press Chan — you must first enter a checkmark for the "In Menu" option in the *Channel List* menu for each automatic channel that you want to list.

Creating a New Channel — USING "NEW"—

➤ You can also define a channel from within the *Channel List* menu accessed from the *Main* menu. This procedure is as follows:

STEP 1 From the presentation level press Menu to display the main menu. To display the *Channel List* menu, press 3, or move the highlight to the *Channel List* icon and press Enter.

The *Channel List* (Figure 3-8) displays a table of all defined channels and how they are connected to the projector. The numbers in the far left column represent each channel number defined so far, automatic or not. Other columns list details pertaining to each channel setup, such as its name, switcher number, slot location and other information.

The last two columns in the *Channel List* menu list the frequencies and polarity (“ + ” or “ - “) detected for each channel signal. If neither symbol is present, there is no sync.

Downloaded from Projector.com

Use the scroll bar to see and work with any additional channels not visible in the table.

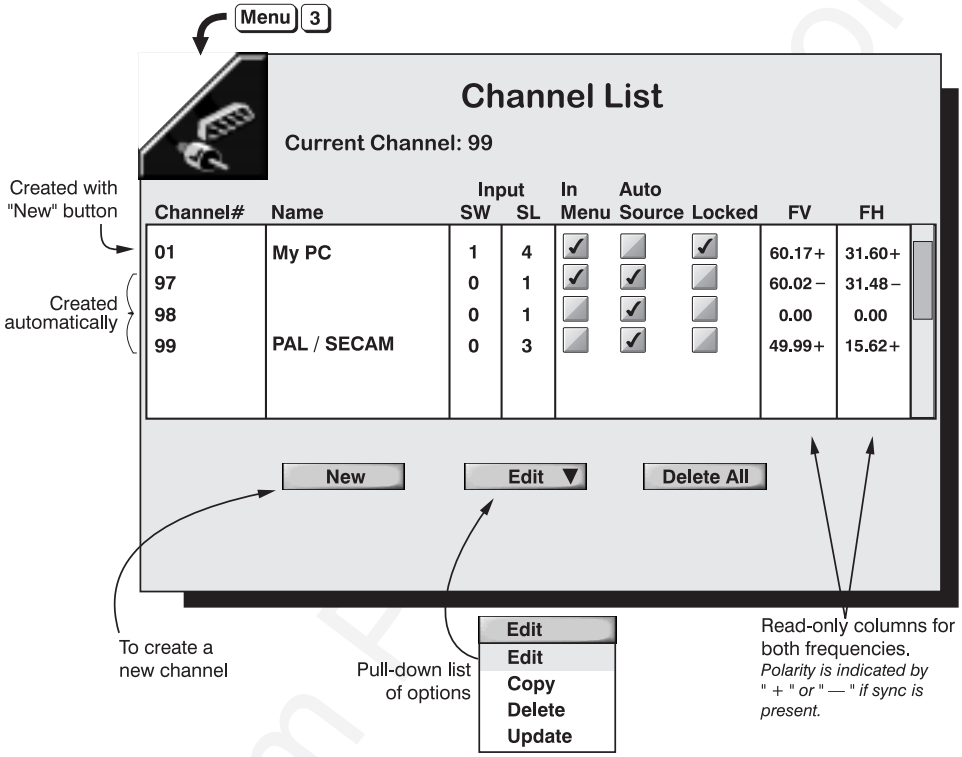

Figure 3-8. Channel List Menu

STEP 2 Beneath the *Channel List* window, select the "New" button, which will store the current signal as a channel with the following defaults assigned:

- **channel number** = the lowest unassigned number (up to 99).
- **switcher (SW) number** = 0 (represents the projector itself). Or, if the input source is connected to a switcher, the default will be the lowest switcher number available (from 1-9).
- **slot (SL)** = 1 (Input1), 2 (Input2), 3 (Input3), or 4 (Input4) for projector inputs, or current slot number (1-9) if the source is connected to a switcher.
- **InMenu** = checked. The source will then appear in the channel list whenever Chan key is pressed.
- **AutoSource** = checked. The projector will be able to automatically find this channel on power up if the input signal matches.
- **Locked** = unchecked. Settings for the channel can be changed.

If you define a new channel without a signal present, the projector memory remains uninitialized until you "Update" the setup with an actual signal. See *Updating a Channel* below.

STEP 3 Repeat Steps 1 and 2 for each remaining new channel you wish to add. Press Menu or Exit on the keypad to accept all new channels defined. *NOTE: The new channel will not have frequencies—use Update function.*

Editing a Channel ➤

You can edit the setup information assigned to a channel. For example, you can change its number or name (such as "VHS#1" or "My PC"), or you can change the switcher number, slot number, etc. pertaining to a specific source, or you can add the channel to your Chan key list.

STEP 1 From the presentation level press Menu to bring up the main menu. Enter 3 or move the highlight to the *Channel List* icon and press Enter to call up the *Channel List* menu.

STEP 2 Highlight and select the center button at the bottom of the screen. From the pull-down list, select "Edit". This will turn this button into an "Edit" button until you select a different option — "Copy", "Delete", or "Update" — from the list.

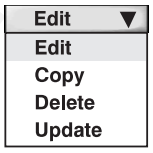

STEP 3 Using the arrow keys, return to the channel setup window above the "Edit" button and select the desired channel. Edit as necessary to accurately reflect your source connections:

- **Channel#:** Enter any new valid number from 1-99. If the number you choose has already been assigned, a message box will appear upon exiting the channel window. Either cancel and enter a different number or overwrite the old channel.
- **Channel Name**: Enter a maximum of 16 lowercase characters and/or 12 uppercase characters to describe your channel (see ***Editing Text***, above).
- **Switcher#:** Enter "0" if the signal is physically connected to the projector itself. Enter 1-9 if the signal is physically connected to a switcher.
- **Slot#:** Enter 1-4 for a connection to the projector itself or 1-9 for a slot on a switcher.
- **Checkboxes:** Toggle any checkboxes as desired for the channel.

Repeat for each channel you wish to edit. Press Menu or Exit to accept all editing.

Copying a Channel ➤

Highlight and select the center button at the bottom of the screen. From the pull-down list, select "Copy". This will turn this button into a "Copy" button until you select a different option — "Edit", "Delete", or "Update" — from the list.

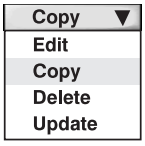

Using the arrow keys, return to the setup window above the "Copy" button and select a channel you wish to copy. The new channel will be defined with the same settings from this setup and will be assigned the lowest available number — the original setup remains intact.

Deleting a Channel ➤

To delete a particular channel, select the center button at the bottom of the screen and select "Delete" from the pull-down list. Use the arrow keys to return to the setup window above the delete button. Highlight the channel you want to delete and press Enter on the keypad. If the channel is unlocked, a confirmation box will appear to ensure that you really want to delete the channel (select "OK" or "Cancel"). If the

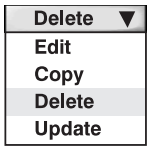

Downloaded from Projector.com

channel is locked, a confirmation box will appear to remind you that the channel is currently locked and to ask if you are sure you want to delete it ("OK" or "Cancel").

To delete *all* channels, select the on-screen "Delete All" button and press [Enter] on keypad. A confirmation box will appear to ensure that you really want to delete all channels (select "OK", "Unlocked Only", or "Cancel"). Select "OK" *only* if you really want to delete all channels, regardless of whether they are locked or not.

NOTE: You cannot delete the current channel with "Delete" or "Delete All".

Updating a Channel ➤ Highlight and select the center button at the bottom of the screen. From the pull-down list, select "Update". This will turn this button into an "Update" button until you select a different option — "Edit", "Copy", or "Delete" — from the list.

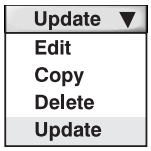

Using the arrow keys, return to the main channel listings above the "Update" button and select the channel you wish to update. The setup for this channel will change to reflect any current settings, recognizing the horizontal and vertical scan frequencies present and recording them in the last two columns.

3.6 Adjusting the Image

All options for image adjustments can be accessed through two menus: *Size / Position* ([Menu] [1]) and *Image Settings* ([Menu] [2]), both of which are listed in the *Main* menu. While in either of these two menus, you can change settings affecting the image from the current channel by working with the appropriate slidebars, checkboxes and pull-down lists. [Exit] will always return to presentation level and accept any changes you may have made within a menu.

From presentation level, you can access any of the first ten individual options on these menus by pressing [Menu] followed by the appropriate two-digit number representing their location in the menu system. For example, press [Menu] [2] [6] to quickly access the color temperature option in the *Image Settings* menu.

Note that for certain options, you may prefer to use [Func] from presentation level to go directly to a particular option rather than traveling through the menu system at all (*note: this is not available for all options*). For example, press [Func] [0] [8] to access the left blanking slidebar immediately.

In addition, numerous “direct keys” such as [Position], [Pixel], [Cont], etc. access their respective slidebars immediately. Press any of these keys to adjust the corresponding slidebar during your presentation. For example, press [Color] to move the image. Press [Exit] to return to your presentation.

NOTE: 1) To hide the “direct” slidebars only, make sure the Display Slidebars option in the ***Preferences*** *menu is OFF. 2) To hide the entire menu system from view, toggle the on-screen display OFF: press and hold the [OSD*] key.*

Downloaded from Precision

Image Size and Position ➤

Select any of the following slidebars or pull-down lists to alter your image. Refer to *"Using Slidebars and Other Controls"* (earlier in this section) if you need help in selecting options and accepting changes. Changes made to the *Size / Position* menu will be saved when you exit the menu (press Exit or Menu).

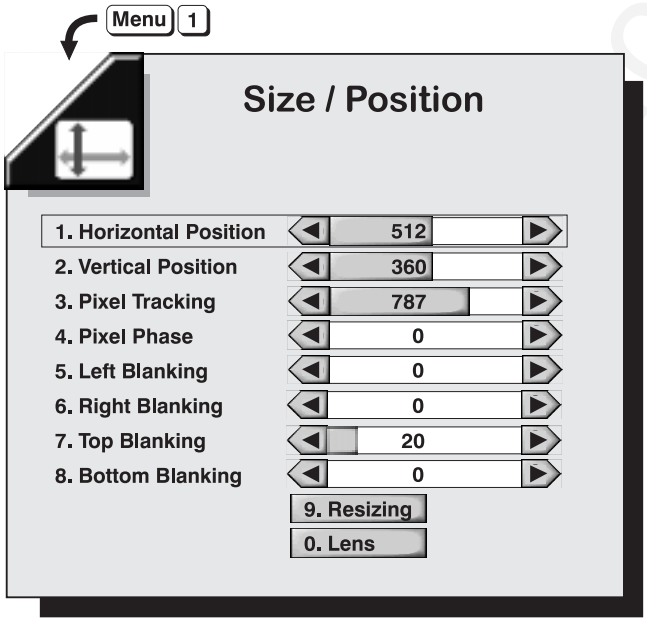

Figure 3-9. Size / Position Menu

Horizontal Position

(SHORT CUT: Func 0 2 from presentation level. Or use Position key and adjust the top slidebar.)

Moves picture right and left.

NOTE: The number on the slidebar represents where the approximate center of the image lies in relation to the total number of pixels available horizontally and varies widely according to the signal. Watch the image while adjusting.

Vertical Position

(SHORT CUT: Func 0 3 from presentation level. Or use Position key and adjust the bottom slidebar.)

Moves picture up and down.

NOTE: The number on the slidebar represents where the approximate center of the image lies in relation to the total number of lines available vertically and varies widely according to the signal. Watch the image while adjusting.

Pixel Tracking

(SHORT CUT: Func 0 4 from presentation level. Or use Pixel key and adjust the top slidebar.)

Pixel tracking adjusts the frequency of the pixel sampling clock, indicated by the number of pixels per line, so that all pixels generated by a particular source are

Downloaded from

sampled. Proper pixel tracking ensures that the image is of the correct proportion and not stretched or compressed from left-to-right.

NOTE: By default, the projector samples at the correct frequency for a given source. For best results, it is recommended that this default not be overridden.

Pixel tracking is adjusted most effectively using a good test pattern, such as a smooth gray image made up of a clear pattern of tiny black and white dots, or a similar graphic image. Steady flickering or several soft vertical stripes or bands across the entire image indicates poor pixel tracking. Adjust the slidebar up or down until the stripes broaden to the point where one large stripe fills the image.

Pixel Phase

(SHORT CUT: Func 0 5 from presentation level. Or use Pixel key and adjust the bottom slidebar.)

Pixel phase adjusts the phase of the pixel sampling clock relative to the incoming signal. It is used primarily for adjusting RGB inputs.

NOTE: Adjust pixel phase after pixel tracking is properly set.

Adjust pixel phase when the image (usually from an RGB source) shows shimmer or “noise”. Pixel phase adjustment is done most effectively from within a proper test pattern, such as a smooth gray image made up of a clear pattern of tiny black and white dots, or a similar graphic image. Adjust until the image is stable and each dot is clearly defined. Using the numbers on the slidebar as a guide, you will notice that you can actually stabilize the image at more than one point—i.e., you may find that the image appearance at "11" is the same as the image appearance at "38", thus you can select either setting.

Left, Right, Top or Bottom Blanking

(SHORT CUT: Func 0 6, 7, 8, or 9 from presentation level.)

Blanks (turns to black) the top, bottom, left, or right edge of the image so that any unwanted information is hidden.

Resizing (submenu) ➤

(SHORT CUT: Func 0 1 from presentation level.)

Resizing generates a separate submenu of controls as described below.

When to Use Resizing

Resizing allows you to increase or decrease the size of your image. You can also control the horizontal and vertical sizes independently to change the aspect ratio of an image, and you can move the image to a specific area of the screen. Use resizing in order to match your image precisely to the specific screen size and aspect ratio (proportion) needed in your application.

How to Access & Adjust Resizing

The three sets of horizontal/vertical resizing controls plus a “Presets” option reside in their own *Resizing* submenu (Figure 3-10). Access this submenu through the “**Resizing**” pull-down list in the *Size / Position* menu.

Downloaded from Projector.com

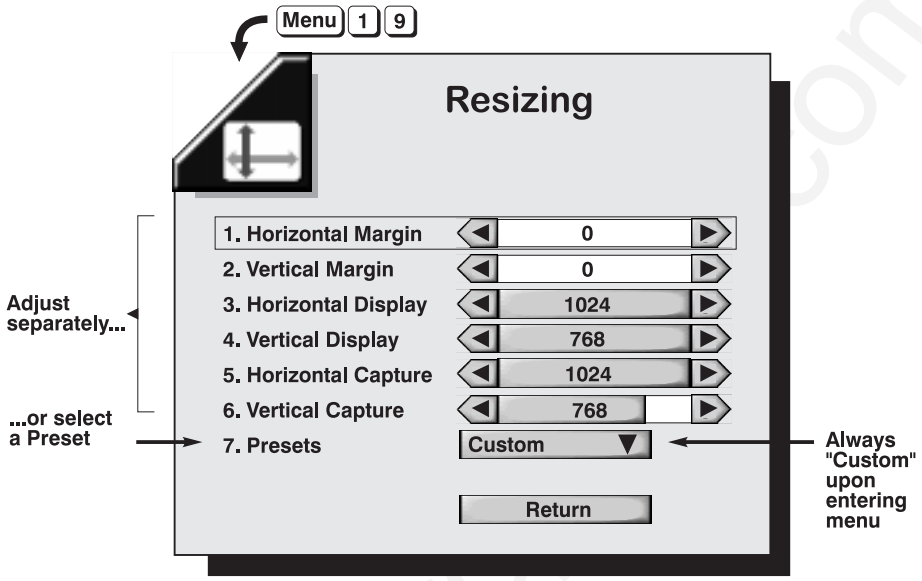

Figure 3-10. Resizing Menu

The first six controls in the resizing menu are described below, followed by a typical step-by-step manual resizing procedure. To adjust the first six options, use the [◄−] or [+►] keys to decrease or increase. Press [Enter] to accept the changes and return to the *Resizing* submenu (or [Exit] to return to presentation level).

Horizontal Margin

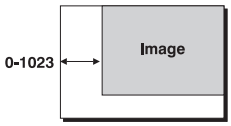

Moves the image left or right, essentially by displacing it with the left margin amount you specify. When moved as far as possible to either side, the image aligns with the edge without loss or wrapping to the opposite side. Note that the margin is limited by the size of the image set in Horizontal Display, below.

Range: 0-1023 pixels

Vertical Margin

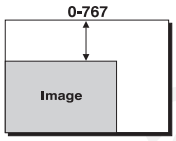

Moves the image up or down, essentially by displacing it with the top margin amount you specify. When adjusted as far as possible up or down, the image aligns with the edge without loss or wrapping to the opposite edge. Note that the margin is limited by the size of the image set in Vertical Display, below.

Range: 0-767 lines

Horizontal Display

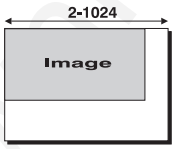

Stretches or compresses the image horizontally. The value you choose for this setting determines how many pixels are used across the display. Note that only even-numbered values can be specified and that the horizontal display setting cannot be more than twice the horizontal capture setting.

Range: 2-1024 pixels

Downloaded from manuals.com

Vertical Display

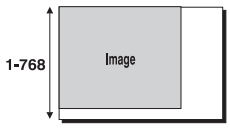

Stretches or compresses the image vertically. The value you choose for this setting determines how many lines from top to bottom are used for displaying the image.

Range: 1-768 lines

Horizontal Capture

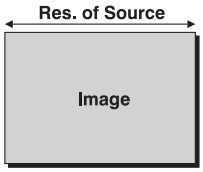

Determines what portion of the image is displayed horizontally, much like a zoom function. The horizontal capture setting represents the number of active pixels present across the image—i.e., this value should match the horizontal resolution of your current source in normal situations where you want to see the entire image. Horizontal Capture adjustments are most useful for tweaking default settings. The higher the setting, the smaller the image. Note that the horizontal capture setting cannot be less than half of the Horizontal Display setting.

NOTE: The adjustment increments represent individual pixels, however the image changes at 16-pixel increments only.

Ranges: 160-1024 for graphics; 3-864 for video.

Vertical Capture

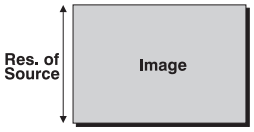

Determines what portion of the image is displayed vertically, much like a zoom function. The vertical capture setting represents the number of active lines present from top to bottom—i.e., this value should match the vertical resolution of your current source in normal situations where you want to see the entire image. Vertical Capture adjustments are most useful for tweaking default settings. The higher the setting, the smaller the image. For interlaced video images, this value should be half the resolution of the source signal.

Range: 80-1024 lines for graphics; 224-240 lines for NTSC video; 224-288 lines for PAL video.

Typical Resizing Procedure

USING MARGIN, DISPLAY AND CAPTURE

STEP 1

Set both Horizontal Margin and Vertical Margin to “0”. The image will “start” in the upper left corner.

NOTE: If both margins are set to "0" and the image is still too far to the right and/or too low, you may have to return to the Size / Position menu and change the main Horizontal Position and Vertical Position.

STEP 2

Set Horizontal Capture and Vertical Capture. These values should match the resolution of your current source in non-zoom situations, such as 1024 (H) x 768 (V). Set so that all of the image is displayed exactly within the display window.

Downloaded from Projector.com

STEP 3

Adjust both Horizontal and Vertical Display so that the image is sized in each direction as desired for your application.

NOTE: If the Horizontal Display setting appears to stop prematurely at too low a setting, it is possible that the current Horizontal Capture setting is too low and is interfering. If so, increase the Horizontal Capture first.

STEP 4

If necessary, re-adjust Horizontal Margin and/or Vertical Margin until the image is placed exactly where you want it.

STEP 5

Repeat Steps 3 and 4 until you are satisfied with both the size and placement of the image. If necessary, double-check your main Horizontal Position and Vertical Position settings in the *Size / Position* menu.

Presets

From the *Resizing* menu, use "Presets" to quickly display an image in its native resolution (including anamorphic) or to automatically resize an image to fill the screen. Capture and/or Display values will, in turn, automatically change as necessary without your having to set them manually.

Custom ▼	
No Resizing	= display in native resolution
Full Screen	= resize image to 1024 x 768
Anamorphic	= retain 16:9 aspect ratio

- **DEFAULT SETTING —**When displaying a new source, the default "Full Screen" option is in effect — NTSC, PAL or SECAM images will automatically resize to fill the screen vertically. HDTV wide-screen images (16:9) will automatically resize to fill the screen horizontally in a 16:9 aspect ratio.

- **WHEN "CUSTOM" APPEARS —** The "Custom" descriptor for the Preset option appears upon entering the *Resizing* menu, even if one of the three presets is currently in effect. "Custom" temporarily disappears only when you select a preset option, and returns whenever you re-enter the Resizing menu or manually adjust one of the Horizontal/Vertical parameters in the Resizing menu.

- **WHEN TO SELECT "CUSTOM" —** Custom as a preset selection functions chiefly as an "escape" or "exit". For example, if you are in the preset pull-down list and decide that you don't want to select a preset after all, select "Custom" to escape back to the Resizing menu without changing the image.

- **SELECT "NO RESIZING"** to display the image in its native resolution rather than resizing the image to use all available pixels in the projector (1024 x 768). All Capture and Display values will change accordingly. For example, for a source with a native resolution of 800 x 600, "no resizing" will cause the image to be centered within a black border — in addition, the Horizontal values for both Capture

Downloaded from Projector.com

and Display will change to 800 and Vertical values will change to 600.

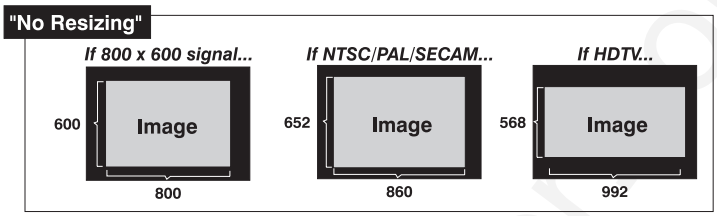

- **SELECT "FULL SCREEN"** (default) to center and display your image as large as possible while maintaining its original aspect ratio. A graphic image will resize from its native resolution (or from current Display values, if they have been adjusted previously) to use all pixels (1024 x 768), so that there are no borders or margins. In addition, both Display values will change to their maximums. Full-screen video images will resize to fill the screen vertically. A non-HDTV anamorphic image (originally 16:9) will be stretched vertically. With the exception of HDTV (16:9), the "Full Screen" setting results in a 4:3 display.

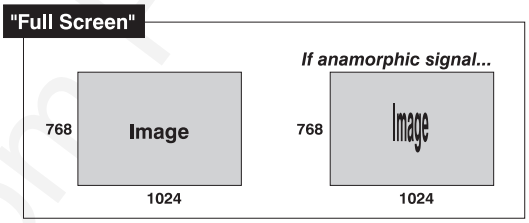

If desired, you can display a *portion* of your image "full screen" (like a zoom): reduce the Capture values as desired, so that less of your image will appear, then select "full screen".

- **SELECT "ANAMORPHIC"** to display an entire "wide-screen" (anamorphic) image in its native 16:9 aspect ratio. The image will fill the screen from left-to-right, but will not use all vertical pixels available (top and bottom will be black). In addition, the Display values will change to reflect the 16:9 ratio — the Horizontal value will be 1024 and the Vertical value will be 582. If you do *not* choose the anamorphic option when an anamorphic (wide-screen) image is present, the image will appear vertically stretched into a 4:3 image.

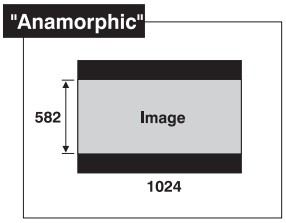

Lens (submenu) ➤ ***(SHORT CUT:*** Lens from presentation level.)

Downloaded from Projector.com

Select the *Lens* submenu to set focus/zoom and lens off

set. Note that this menu contains two double slidebars — press Enter to select the first slidebar. To continue with another slidebar, press the desired option number, or navigate as usual and press Enter to select. Refer to *"Using Slidebars and Other Controls"* (above) if you need help.

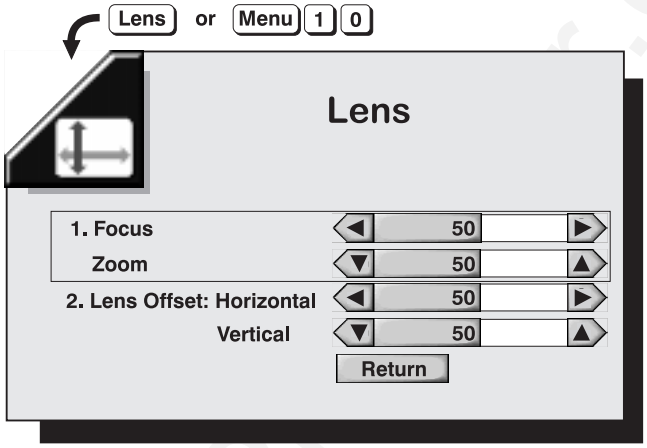

Figure 3-11. Lens Submenu

Image Settings ➤ Select any of the following options to alter your image. Refer to *"Using Slidebars and Other Controls"* (above) if you need help in selecting options and accepting changes. Changes made to the *Image Settings* menu will be saved when you exit the menu (press Exit).

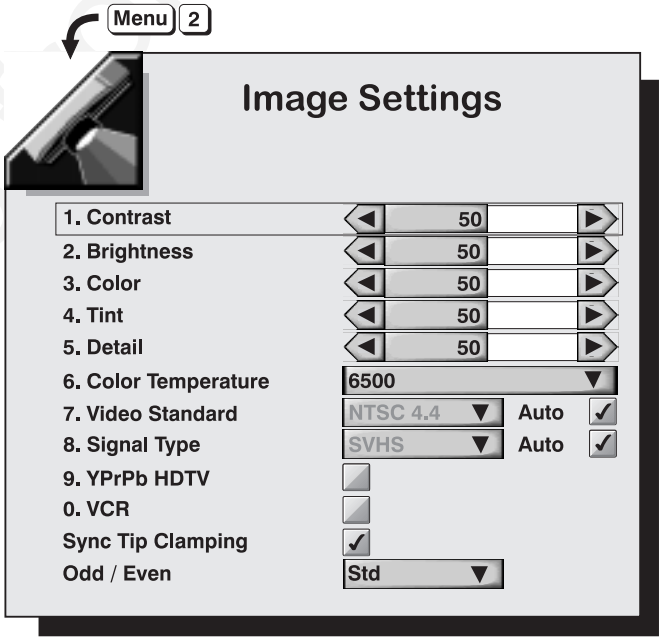

Figure 3-12. Image Settings Menu

Contrast

(SHORT CUT: Func 2 2 from presentation level. Or use CONT key.)

Increases or decreases the perceived difference between light and dark areas of your image (0-100). If contrast is set too high, the light parts of the image lose

detail and clarity. If set too low, the light areas will not be as bright as they could be and it may be difficult to distinguish between foreground and background information. Adjust so that whites remain bright but not distorted or tinted.

NOTES: ***1)*** *For best results, adjust brightness before contrast.* ***2)*** *If environment lighting changes, it may be necessary to re-adjust both options.*

Brightness

(SHORT CUT: Func 1 1 from presentation level. Or use Bright key.)

Increases or decreases the amount of perceived light in the dark part of the image (0-100). If video or data is displayed with a black background, adjust until the background just changes from black to very dark gray.

Color

(SHORT CUT: Func 3 3 from presentation level. Or use Color key.)

Adjusts color saturation level, or the amount of color in a video image. For example, setting Color to "0" produces a black and white image. If Color is set too high, the color levels in the picture will be over-powering and unrealistic. Use ◄– or +► until the desired color saturation level is displayed.

Tint

(SHORT CUT: Func 4 4 from presentation level. Or use Tint key.)

Adjusts color hue to obtain true color reproduction of NTSC video signals. Use ◄– or +► until the you reach optimum balance of red-to-green in your image. It is best to adjust tint while displaying a proper test pattern — otherwise, it is recommended that tint remain at its default setting.

Detail

(SHORT CUT: Func 5 5 from presentation level.)

Adjusts the sharpness of the video image. Use ◄– or +► until the display is as sharp as possible, keeping in mind that any level of detail above 50% will increase the level of detail as well as introduce some level of noise in the image. Set below 50% to filter the signal and remove noise from a noisy source. Keep at 50% to apply no detail.

Color Temperature

Applies either a preset color temperature (3200, 5400, 5800, 6100, 6500, 9300) or a Custom or Interpolated color temperature to the image. All are measured in degrees Kelvin and represent the "coloration" (reddish or bluish) of the whites displayed by the projector — the lower the temperature, the more reddish the whites, the higher the temperature, the more bluish the whites. Use the following as a guide for most applications:

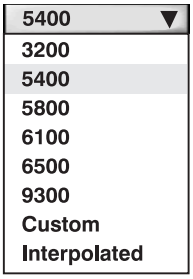

Downloaded from Projector.com

Color Temperature (K)	Typical Application
3200	theatre
5400	film and film-to-video transfers
5800	
6100	for peak lumens from 1.8 kW lamp
6500	most video and computers
9300	some computers with a bluish setting

INTERPOLATED COLOR TEMPERATURE - In specialized applications, such as when you are matching adjacent displays with numerous sources, you may find that you need a specific color temperature that lies somewhere between one preset color temperature and another. In this case, select the *Interpolated* option and use the slidebar to adjust the temperature as desired in increments of 10°K. This new temperature, which is interpolated from the neighboring presets, can be used with any source and appears as shown when it is in effect:

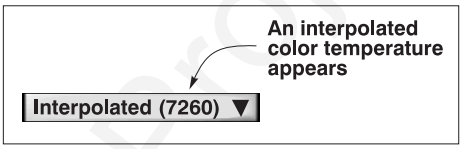

CUSTOM COLOR TEMPERATURE - If you need a specific color temperature for the current source only, select the *Custom* option. This will produce a separate *Custom Color Temperature* sub-menu in which you can customize 3 drives and 3 blacklevels to create a new temperature for the current source as described below:

1) Make sure the projector is warmed up. In the *Image Settings* menu, set the main projector brightness to 50 and contrast to 60. Display the "grayscale 10" test pattern (use the Test key).
2) In the *Color Temperature* pull-down list, select *Custom*.
3) In the *Custom Color Temperature* sub-menu, select "Default". From the list, choose the preset color temperature which most closely resembles the new color temperature desired. For example, if you want a slightly higher (more bluish) temperature than 6500°, select 6500° as a starting point.

   NOTE: The "default" temperature option you begin with automatically changes to "custom" as soon as you begin adjusting— you will not lose the preset. If you make a mistake and want to start over, select "default" again to reset.

4) The 3 drives and 3 blacklevels for the default temperature you selected are shown in the menu. Note that the blacklevels are likely all set to 30, and drives are 73 or less. ***Always leave the blacklevels at 30, and always keep at least one drive at 73.***

Downloaded from Projector.com

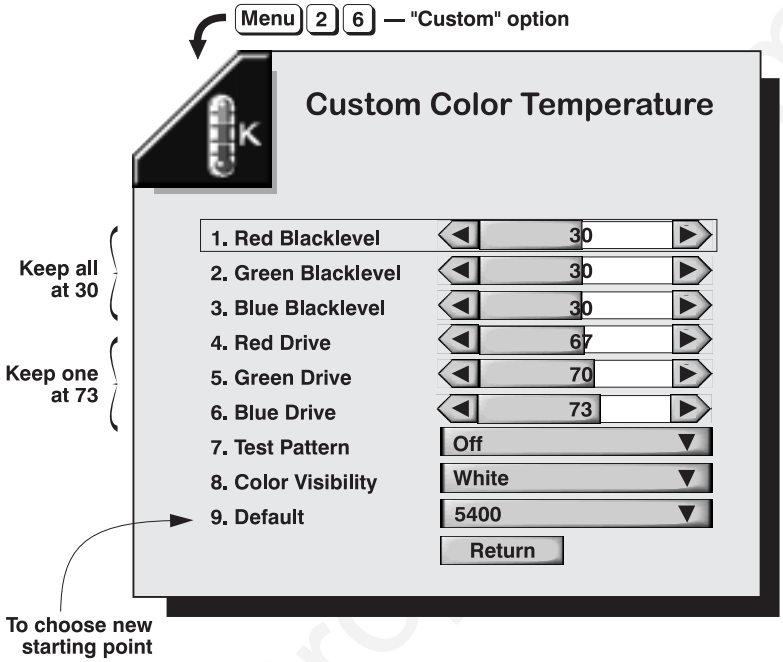

Figure 3-13. Creating a Custom Color Temperature

To adjust, ***increase*** the drive level for a color that appears too weak in the test pattern (i.e., one that is less than 73). Try not to ***reduce*** a drive, as low settings can reduce overall projector brightness. Also keep in mind that setting a drive level over 73 will limit the number of discernible grays and produce an uneven color temperature across the grayscale.

NOTES: 1) Always try to achieve the desired effect by first increasing the drive level for the color judged to be weak. If the drive level for that color is already at 73, then decrease the contrast level for one or more of the other colors. 2) If you want to adjust each color individually, you can connect only one signal cable — red, green or blue — at a time.

5) When the grayscale appears as you want, select *Return*. You can now use this temperature with the current source.

Video Standard

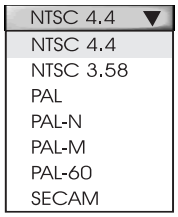

If "Auto" is checked, the projector will automatically detect the video standard present and display this standard in the adjacent box. If "Auto" is unchecked, press ENTER at the adjacent pull-down list to view or select a different video standard from a complete list available to the projector. Selecting a specific standard forces the projector to process the signal according to this standard. Re-check the "Auto" checkbox to return to automatic detection of the standard.

NOTE: This option should remain set at auto for all instances EXCEPT: 1) a poor quality input signal or 2) a black-and-white video signal. In order to detect and display such signals, uncheck "Auto" and specify the relevant standard.

Downloaded from Pro

Signal Type

If "Auto" is checked, the projector will automatically detect the type of signal present (unless it is RGB-Video or YUV) and will display the signal type to the left in the adjacent box. If "Auto" is unchecked, press ENTER at the adjacent pull-down list to view or select a different signal type from a complete list available to the projector. Re-check the "Auto" checkbox whenever you want to return to automatic detection of the signal type.

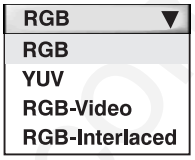

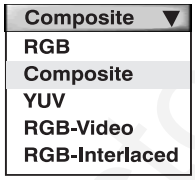

Menu appearance if Composite Video is connected to Dat 1 (Input 1)

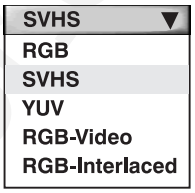

Menu appearance if S-Video is connected to Dat 1 (Input 1)

NOTES: 1) RGB-Video (which requires a third-party decoder) and YUV signals cannot be automatically recognized — if you use either of these sources, you must select the corresponding signal type from the list. 2) It is recommended that this option remain set at auto for other signal types. 3) If you are using the VDI optional interface, Signal Type will be "auto" and the option list disabled.

YPrPb HDTV

Enter a checkmark only if your HDTV source is labeled "YPrPb". This will apply the correct colors needed for this standard. For all other sources — including RGB HDTV — delete the checkmark. If you are not sure of the source, judge by eye for the most accurate colors. By default, the checkmark is present for any type of HDTV source and deleted for all other sources.

NOTE: This source requires an HDTV Input Module (available as an option) — do not connect HDTV to Input 1. Contact your dealer or Electrohome.

VCR

(SHORT CUT KEY: Func 5 0 from presentation level.)

This option determines to what degree the projector tolerates signal disturbances. Enter a checkmark only if the NTSC 3.58 image generated from your VCR source appears noisy or unstable (such as after a fast-forward), or if the image has a very high level of detail. For best results, leave blank.

Sync Tip Clamping

This option can brighten the image produced from certain high resolution, high frequency graphic sources. Enter a checkmark if the image appears unusually dim, if there are horizontal streaks across the image, or if there is significant color drift. Delete the checkmark if the image is either sufficiently bright or overly bright.

NOTE: Does not apply to video sources or any RGB source with sync information on the video (e.g., sync-on-green).

Odd / Even

Use this control to smooth out any circles and/or diagonals appearing jagged due to missing or misaligned lines from some interlaced video signals. Choose the option which produces the smoothest effect.

Downloaded from Projector.com

3.7 Adjusting and Checking System Parameters

The last four *VistaGRAPHX 10K* function menus display or alter overall system parameters.

Communications ➤

Use the checkboxes and pull-down lists in the *Communications* menu to alter communications to and from the projector. Refer to *"Using Slidebars and Other Controls"* subsection if you need help. Changes made to the *Communications* menu will be saved when you exit the menu (press Exit.)

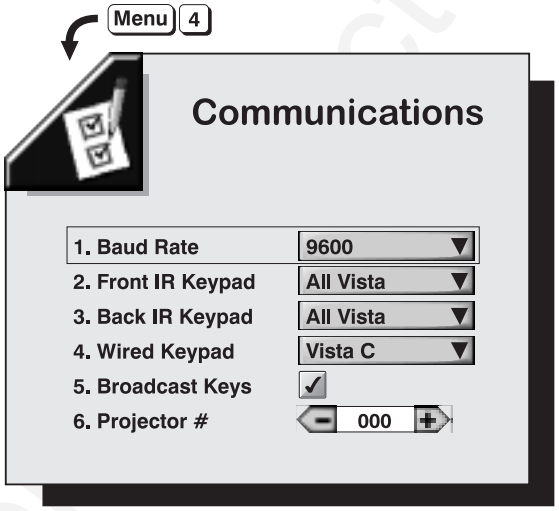

Figure 3-14. Communications Menu

Baud Rate

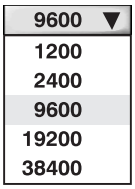

The baud rate setting determines the speed of communications to and from the projector. It is important if you are controlling the projector with an external device such as a computer or another projector via an RS-232 or RS-422 port. The *VistaGRAPHX 10K* baud rate must be set to match the baud rate of the controlling device. If you are unsure about what baud rate to assign, refer to the documentation for the controlling device. By default, the projector baud rate is set to 9600.

NOTE: ***1)*** *The baud rate setting does not affect the switcher port, which is always 9600 baud.* ***2)*** *See* ***2.9, Serial Port Connections*** *and* ***Appendix D*** *for more information about cable connections between devices.*

Front IR Keypad / Back IR Keypad

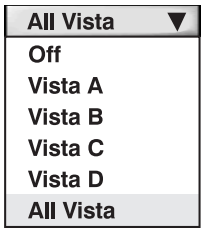

The standard IR remote keypad is capable of sending data to the projector in either one of two protocols called ***Vista C*** or ***Vista D***. Likewise, the front and rear IR sensors on the projector can be set to accept IR data accordingly, responding to ***Vista C, Vista D,*** or ***All Vista***. The projector's ***All Vista*** default is adequate for most single-projector installations. Select a specific protocol to prevent interference when you are

controlling two protectors in the same area and want to work with one projector at a time.

Note that if you change a protocol for either sensor to anything other than ***Off***, the protocol for the other sensor also changes. For example, setting the Front IR Keypad option to ***Vista D*** also changes the Rear IR Keypad to ***Vista D***. If you want only one sensor to respond to a particular protocol —***Vista C***, ***Vista D***, or ***Vista All*** — disable the other sensor by setting its protocol to ***Off***.

IMPORTANT
You can disable the current IR keypad. Keep at "*All Vista*" until you are sure of the current IR protocol.

NOTES: 1) VistaGRAPHX IR keypads are set at manufacture to "Protocol C". See ***2.10, Keypad Protocols*** *for information about changing the keypad protocol. 2) VistaGRAPHX IR keypads do not use* ***Vista A*** *or* ***Vista B****. Use* ***Vista A*** *or* ***Vista B*** *only if you are using an IR keypad supplied with a VistaPro projector.*

Wired Keypad

Like the IR remote, the optional wired keypad is either a "Protocol C" keypad (default) or a "Protocol D" keypad. Likewise, the projector can be set to accept wired keypad data accordingly, responding to ***Vista C, Vista D,*** or ***All Vista***. If desired, you can prohibit the projector from responding to a particular wired keypad protocol, or you can ensure that the projector responds to either protocol (default). You can also prevent the projector from responding to the keypad entirely. In the pull-down list, select one of the following protocols for the projector:

NOTES: 1) VistaGRAPHX wired keypads are set at manufacture to "Protocol C". See ***2.10, Keypad Protocols*** *for information about changing the keypad protocol. 2) VistaGRAPHX wired keypads do not use* ***Vista A*** *or* ***Vista B****. Use* ***Vista A*** *or* ***Vista B*** *only if you are using a wired keypad supplied with a VistaPro projector.*

Broadcast Keys

Enter a checkmark if you want keypad commands sent to one projector to be relayed to all projectors in a network. Note the [PROJ] key will still allow you to control a specific projector when necessary.

Projector #

[− 001 +] Enter a three-digit number (such as "000") to assign a number to the projector currently in use. Numerical identity for projectors is required whenever you want to communicate with a single projector within a multiple-projector application (see [PROJ] key, above). If you make a mistake, press [Exit] to cancel.

For more information about controlling multiple projectors, see *Section 3.8.*

Preferences ➤ Use the checkboxes and pull-down lists in this menu to alter how the projector responds to commands and displays parameters. Refer to the *"Using Slidebars*

Downloaded from Projector.com

and Other Controls" subsection if you need help. Changes made to the *Preferences* menu will be saved when you exit the menu (press Exit.)

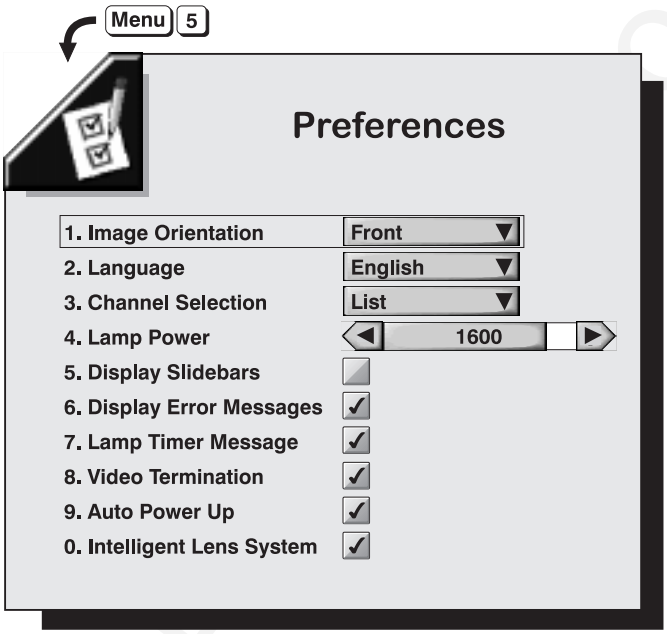

Figure 3-15. Preferences Menu

Image Orientation

Choose from Front, Rear, Inverted Front, Inverted Rear according to your installation. If the setting is incorrect, the image will be reversed and/or upside down. See ***2.6, Operating Orientation*** for an illustrated explanation.

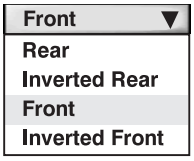

Language

Choose to display menu text in English, French, German, Italian or Spanish.

Channel Selection

Choose how you want to select channels from the Chan key. Choices are 1-digit entry, 2-digit entry, or a scrollable list of channels (note that each channel to be included in the list must also be tagged in the "In Menu" checkbox in the *Channel List* menu).

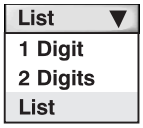

Lamp Power

Adjust the amount of power applied to the lamp to alter light output on screen. The range of adjustment is 1000-1800 watts. A setting of 1800 (the default) applies 1800 watts; anything less will increase lamp life while decreasing brightness. The higher your lamp power settings, the shorter the life expectancy of the lamp.

NOTES: 1) Unlike the other Preferences parameters, the Lamp Power setting affects the current source/channel only and is recalled from source-to-source (channel-to-channel) just as any Image Setting parameter. 2) Lamp power is reduced to its 1000 watt minimum while in Standby.

Downloaded from

Display Slidebars

Enter a checkmark to superimpose a slidebar over the current image when an adjustable parameter is selected directly. These slidebars include volume, contrast, brightness, position, pixel tracking and phase, and others. If unchecked, these slidebars (or any from Func codes) will be hidden during adjustment.

Display Error Messages

Enter a checkmark to see on-screen messages indicating errors as they occur. See *3.9, Error Messages*.

Lamp Timer Message

Enter a checkmark if you want a lamp timer message to appear for a moment when the lamp in the projector reaches its 1000-hour life. Once it appears, the lamp timer message will time-out (disappear from screen) after 30 seconds.

NOTE: For maximum lamp performance and safety, it is recommended that display of this message remain enabled — enter a checkmark.

Video Termination

Enter a checkmark to terminate the video input (75 Ω). The input should be terminated unless the signal loops through (continues) to another projector or display device, in which case the last projector in the chain should be terminated.

Auto Power Up

Enter a checkmark to enable the projector to automatically power up after a power failure. Note that unsaved display adjustments may be lost.

Intelligent Lens System™

Enter a checkmark to enable *VistaGRAPHX* Intelligent Lens System® functions. With any subsequent channel changes, the projector will automatically return to the zoom, focus and lens offsets previously set for each channel.

NOTE: If you ever need to abort an ILS™ function (such as a focus adjustment) during a switch from one channel to another, press Func 5 3 from presentation level. All lens movements in progress will immediately stop.

Status ➤ This primarily read-only menu (Figure 3-16 and Figure 3-17) consists of four separate read-only menus plus a text editing box used for entering the serial number of a new lamp. The four menus list a variety of details about the standard and optional components currently in use on the projector. Refer to these menus for information about hardware and software versions installed, number of lamp hours logged in total and for the current rental period, and projector model and serial number. In addition, the *Status* Menu identifies the current channel, switcher, slot and frequencies present. Use the *Status* menu whenever you install a new lamp assembly.

Downloaded from Projector.com

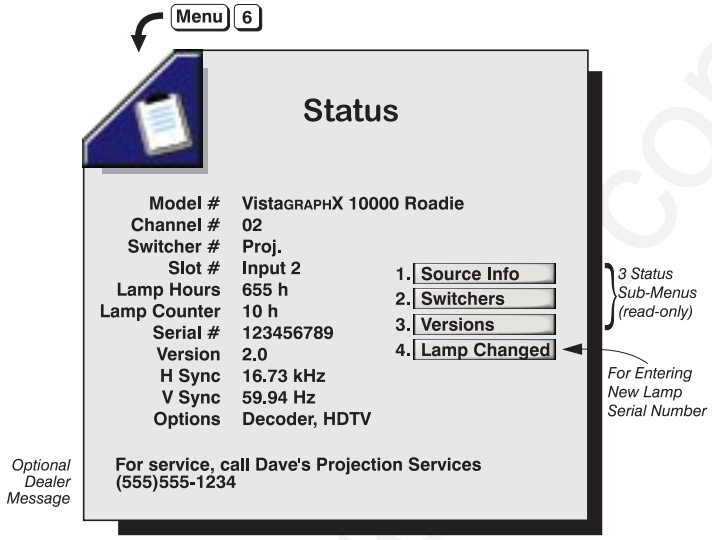

Figure 3-16. Main Status Menu (sample)

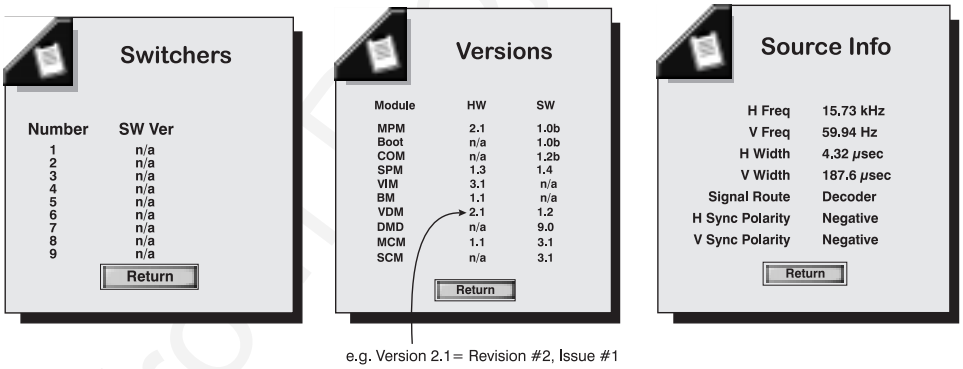

Figure 3-17. Status Sub-menus (sample)

Lamp Changed

When you install a new lamp assembly, select the "Lamp Changed" button on the main *Status* menu to record the serial number of the new lamp. Using the arrow keys to navigate, press Enter on the keypad to select each number or character needed for the serial number (Figure 3-18). When you are done, select the "Accept" button to record the new number — or press Exit to cancel. If you need help with this window, see the *Editing Text* subsection earlier in this section.

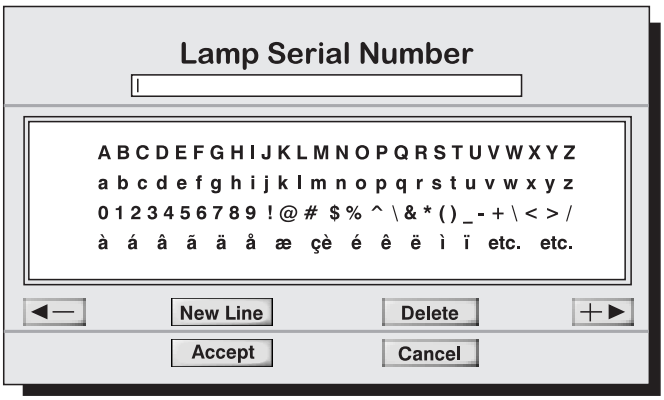

Figure 3-18. Entering a New Lamp Serial Number

Downloaded from Pro...com

Recording the serial number of the new lamp automatically resets the lamp timer to "0". The timer will now begin logging each hour of use for the new lamp, recording the current level in the main *Status* menu as “Lamp Hours”. Note that the “Lamp Counter”, which shows the number of hours the lamp has been used during the current rental period, does **not** automatically reset when a new lamp is installed. See *4.4, Replacing the Lamp and Filter* for complete instructions on installing a new lamp assembly.

WARNING

If you enter a serial number and select the "Accept" button WITHOUT having installed a new lamp, the timer will incorrectly return to "0" and will therefore no longer be accurate. The old lamp may expire without warning.

NOTE: Once entered, the new lamp serial number is also automatically added to the "Lamp History" list of lamp serial numbers in the Service menu (password-protected).

Service ➤ The *Service* menu is password-protected and can be used by qualified service personnel only. However, test patterns from the *Service* menu can be accessed through the keypad shortcuts shown below. Press [Exit] to return to your presentation.

Command	Test Pattern
[Func] 80	List of test patterns
[Func] 81	User Image
[Func] 82	***Cross***
[Func] 83	Checker
[Func] 84	Grey Scale 128
[Func] 85	***Grey Scale 10***
[Func] 86	***Color Bars***
[Func] 87	***Black***
[Func] 88	90% Black
[Func] 89	80% Black
[Func] 90	70% Black
[Func] 91	60% Black
[Func] 92	50% Black
[Func] 93	40% Black
[Func] 94	30% Black
[Func] 95	20% Black
[Func] 96	10% Black
[Func] 97	***White***

NOTE: Patterns appearing in ***Bold*** *in the above list can also be accessed with the* [Test] *key.*

Downloaded from Projector.com

3.8 Using Multiple Projectors

When working with multiple projectors, you may want to use the RS-232 ports to chain the projectors together in a network that you control from either a keypad or a computer/controller (*see 2.9, Serial Port Connections*). Or you may prefer that each projector stands alone, in which case you will probably use a single IR remote keypad. In either case, you can switch back and forth between broadcasting to all projectors or controlling each projector individually.

Assigning a "Projector#" ➤ Make sure you have assigned a unique projector number to each projector present — this number will be required in order get the exclusive attention of an individual projector. To assign a projector number:

Press [Menu] and select the *Preferences* icon. In the *Preferences* menu, scroll down to "Projector#" and enter a three-digit number (000 to 999) to identify the current projector. Press [Enter] to accept the entry and return to the main menu.

Repeat for each projector, using a unique three-digit number for each. Once every projector has its own number, you can begin to control the network.

Controlling One Projector ➤ If you are using an IR remote, press [PROJ] to display an editable window. Enter the three-digit number you have assigned to the projector you wish to control. All keypad commands will then affect this projector exclusively until you press [PROJ] again and enter a different number, or until you switch to broadcast mode (below).

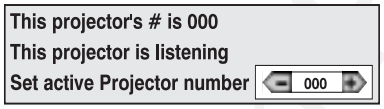

If you are using a wired remote keypad (optional) in a network of projectors, make sure that the projector to which the keypad is connected has its “Broadcast Keys” option checked. Press [PROJ] to bring up the editable box. Enter the three-digit number assigned to the projector you want to control — keypad commands will now affect only the desired projector until you press [PROJ] again and enter a different number, or until you switch to broadcast mode (below).

NOTES: ***1)*** *If you are using a computer or controller to issue commands, use the correct RS-232 software command to gain control of a single projector.*

Broadcasting to All Projectors ➤ On the IR remote or wired keypad, press [PROJ] to display the projector box. Press [Func] *without* entering a number — the keypad commands will now affect all projectors.

Make certain that only one projector has its "Broadcast Keys" option selected (checked) — the remaining projectors should have the option unchecked and their keypads disabled (do this in *Preferences* menu). The "Broadcast Keys" projector will then relay keypad commands to the others. If using a wired remote, make sure to select the “Broadcast Keys” option for the projector to which the wired remote is connected.

NOTE: ***1)*** *If you are using a computer or controller to issue commands, use the correct RS-232 software command to broadcast.*

Downloaded from Projector.com

3.9 Error Conditions

If you would like to be notified on-screen of error conditions, turn on this option from within the *Preferences* menu (enter a checkmark in the Display Error Messages box). Should a user error message ever appear on screen, press Enter key to confirm the message and eliminate the message box. A system error must be resolved in order to eliminate its message box.

NOTE: Error messages always appear at the rear LCD above the keypad.

User Errors ➤ Invalid User Entry

Any entry not recognized by *VistaGRAPHX 10K* will call up this message as well as a brief description and suggestions for solving the problem, even if the Display Error Messages box in *Preferences* menu is unchecked (turned off). Press Enter to confirm the message and eliminate the message box.

System Errors ➤ No Signal

The message *"No signal present: check the source or connections to the projector"* is displayed when there is no signal on the selected input. This means that both HSYNC and VSYNC are inactive and the screen background is black.

Bad Sync

The message *"Bad Sync"* followed by a short description of the problem is displayed when HSYNC or VSYNC are active but the signal cannot be displayed. Such a condition occurs when only one of the two signals is present, or when either signal is unstable or of the wrong frequency.

NOTE: "Bad Sync" or "No Signal" errors must be resolved in order to eliminate the error message. In the meantime, press Menu to use the menu system (other functions remain operational).

Status LEDs

If the "Status" LED on the front of the projector repeatedly flashes a pattern of yellow and red light while the "Power" LED glows a continuous red, you have encountered a possible system error requiring the attention of a qualified service technician. Contact your dealer if the problem persists.

The specific pattern of flashing indicates the 2-digit type code identifying the type of problem detected — the number of yellow flashes represents the first digit and the number of red flashes indicates the second. For example, a pattern of "yellow-yellow-red-red-red" is "Code 23". These codes include:

Code	Description	Code	Description
11	General Fault	31	Unknown hardware failure
12	Software bug	32	MPM, VIM, or SPM faulty
13	CRC error in code	33	SPM, VIM, or VDM faulty
21	MPM self test failed	34	MPM or DMD faulty
23	SPM self test failed	35	I2C error
24	VDM self test failed	36	DMD lamp is overheating
25	VIM self test failed	41	RTC chip failure
26	DMD self test failed	42	RTC verify failure
27	DMD lamp has failed	61	COM software bug

Downloaded from Projector.com

Hard Reset

If the projector does not respond to anything and appears to have inexplicably failed, gently push a very small screwdriver or pen point into the "Hard Reset" hole just to the right of the power LED. This reset will switch the projector off (note that the power LED turns to yellow to indicate "standby mode"). Then press Power* to turn the projector back on. Previously unsaved settings will be lost.

Downloaded from Projector.com

Downloaded from Projector.com

Section 4

Maintenance

4.1 Warnings and Guidelines

VistaGRAPHX 10K is CSA approved and is designed for safe and reliable operation. However, safe operation cannot be assured by design alone; installers, maintainers, and users must maintain a safe operating environment for the system. Please read through and understand the following warnings and guidelines promoting safe usage of the projector.

WARNING
Never look directly into the projector lens. The extremely high brightness of this projector can cause permanent eye damage.

WARNING
For protection from ultraviolet radiation, keep all projector shielding intact during operation.

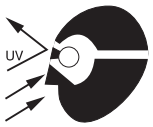

Labels and Markings ➤ Observe and follow all warnings and instructions marked on the projector.

The exclamation point within the equilateral triangle alerts the user to important operating and maintenance (servicing) instructions in the literature accompanying the projector.

The lightning flash and arrowhead symbol within the equilateral triangle alerts the user to uninsulated "dangerous voltage" within the projector's enclosure that may be of sufficient magnitude to constitute a risk of electric shock.

Projector Location ➤ Operate the projector in an environment which meets the operating range specifications in *Section 5, Specifications*. Do not operate the projector close to water, such as near a swimming pool.

Do not place the projector on an unstable cart, stand or table. If the projector is to be ceiling mounted, only use an Electrohome-approved ceiling mount fixture.

A projector and cart combination should be used with care. Sudden stops, excessive force, and uneven surfaces may cause the projector and cart combination to overturn.

Downloaded from Projector.com

Lamp and Filter Replacement

LAMP: Do not operate the Xenon lamp for more than 1000 hours; risk of the lamp shattering increases as a result of changes in the quartz glass. Also, operation beyond 1000 hours significantly reduces brightness output.

⚠ WARNING
Never attempt to remove the lamp housing directly after use. The lamp is under great pressure when hot and may explode, causing personal injury and/or property damage. Allow to cool completely.

The arc lamp operates at a very high temperature and pressure. Failure to allow the lamp to sufficiently cool prior to handling could result in an explosion causing personal injury and/or property damage. After turning the projector off it is important that you wait at least five minutes before unplugging it. This provides enough time for the internal lamp cooling fans to cool the lamp and to automatically shut off. Cool completely before handling.

⚠ WARNING
Use only lamps supplied by Electrohome.

FILTER: Replace the side filters every 1000 hours or sooner. If these filters are not replaced, air flow may become restricted and cause the projector to overheat.

See ***4.4, Replacing the Lamp and Filter*** for the complete replacement procedure.

⚠ WARNING
Use only filters supplied by Electrohome.

Power Cord and Attachments

Only use attachments or accessories recommended by Electrohome. Use of others may result in the risk of fire, shock or personal injury.

⚠ WARNING
Use only the AC power cord supplied. Do not attempt operation if the AC supply is not within the specified voltage and power range.

Do not allow anything to rest on the power cord. Locate the projector where the cord cannot be abused by persons walking on it or objects rolling over it.

Operate the projector at the specified voltage. Do not overload power outlets and extension cords as this can result in fire or shock hazards.

The projector is equipped with a three wire plug having a third (grounding) pin. This is a safety feature. If you are unable to insert the plug into the outlet, contact an electrician to have the outlet replaced. Do not defeat the safety purpose of the grounding-type plug.

Ventilation

Before unplugging the power cord, make sure the internal lamp cooling fans have shut off. The fans automatically shut off when the projector has adequately cooled down.

Downloaded from Projector.com

Slots and openings in the projector provide ventilation. To ensure reliable operation of the projector and to prevent overheating, these openings must never be blocked or covered. The projector should never be placed near or over a radiator or heat register. The projector should not be placed in an enclosure unless proper ventilation is provided.

Do not push objects of any kind into the projector through the ventilation openings. They may touch dangerous voltages or short-out components resulting in a fire or shock hazard. Do not spill liquids of any kind into the projector. Should an accidental spill occur, immediately unplug the projector and have it serviced by a qualified service technician.

Servicing ➤ If any of the following conditions exist, unplug the projector from the power outlet and refer service to qualified service personnel.

- The power cord has been damaged.
- The internal cooling fans do not come on when the projector is first turned on.
- Liquid has been spilled into the projector.
- The projector has been exposed to excessive moisture.
- The projector does not operate normally.
- The projector has been dropped or the case has been damaged.
- Projector performance has deteriorated.

Do not attempt to service the projector yourself. All servicing must be performed by a qualified Electrohome service technician. If replacement parts are required, it is important that only Electrohome-approved parts are used. Other parts may result in fire, electric shock or risk of personal injury.

4.2 Cleaning

Clean the projector when required. Before cleaning, always unplug the projector from the power outlet.

Lens ➤ To avoid the risk of scratching the lens, only clean the lens if absolutely required. A small amount of dust on the lens will have very little effect on picture quality. If the lens must be cleaned, use a DRY soft cotton cloth. Clean gently in a circular motion.

Lamp ➤ It is important to never touch the sapphire (glass) surface of the lamp, as the oil imprint will seriously degrade lamp performance. The wire mesh protector should prevent this. However, should you accidentally touch the surface of the lamp, clean carefully with a lint-free cloth moistened with isopropyl alcohol.

Case ➤ Clean the case with a soft dampened cloth. Use a mild commercial cleaner. Do not use liquid or aerosol cleaners.

4.3 Replacing Keypad Batteries

The optional IR Remote Keypad uses four AA size, 1.5V batteries (preferably alkaline). To install new batteries, open the battery compartment at the back side of the keypad by pulling on the raised portion of the cover as shown (Figure 4.1)

Downloaded from Projector.com

Remove the old batteries and properly discard. Place the new batteries in the compartment, orienting the positive/negative of each battery according to the labels in the compartment. When batteries are in place, replace the cover by inserting its bottom edge first and snapping the top into place. Do not force.

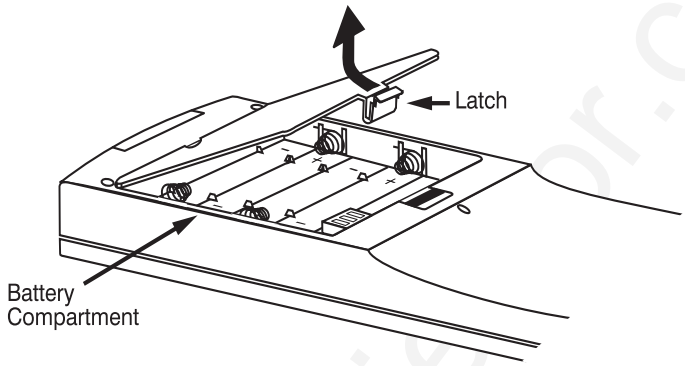

Figure 4-1. Replacing Keypad Batteries

4.4 Replacing the Lamp and Filter

For this procedure you will need a "VistaGRAPHX 10K Lamp Assembly and Filter Replacement Kit" manufactured by Electrohome Ltd.

The high brightness of *VistaGRAPHX 10K* is provided by a 1.8 kilowatt Xenon lamp permanently mounted inside a rugged metal housing. When the bulb approaches 1000 hours of usage the entire lamp assembly needs to be replaced.

How Old is the Lamp?

To determine how many hours the lamp has been used, press Menu and go to the *Status* menu. *Lamp Hours* indicates the total number of hours the lamp has been used so far — do not confuse this with the adjacent *Lamp Counter*, which indicates only the number of hours logged during the current rental period.

NOTE: As the lamp nears 1000 hours of use, a lamp timer message can appear on screen to warn that the lamp is in need of replacement. To make sure that this warning appears, enter a checkmark in the ***Lamp Timer Message*** *checkbox on the* ***Preferences*** *menu.*

⚠ WARNING

Never attempt to remove the lamp when it is hot. The lamp is under great pressure when hot and may explode, causing personal injury and/or property damage. Allow to cool completely and handle by the metal housing only.

STEP 1 ➤ Turn off the projector and allow to cool

Turn off the projector (press Power* ▼OFF) and wait for the cooling fans to automatically turn off. This will take about five minutes.

STEP 2 ➤ Unplug the projector

When the cooling fans have turned off, unplug the projector.

Downloaded from Projector.com

STEP 3 ➤ Unlatch lamp door

The lamp assembly is installed on the left side of the projector about half way back. The lamp door is secured near the top and bottom. To remove:

- See Figure 4-2 and Figure 4-3. Unlatch the center latch by pulling up and loosening ¼ turn.
- Slide the 2 bottom spring fasteners firmly towards the center. Then pull the fasteners towards you to lock in place. **NOTE:** Pull firmly, the springs are very stiff.

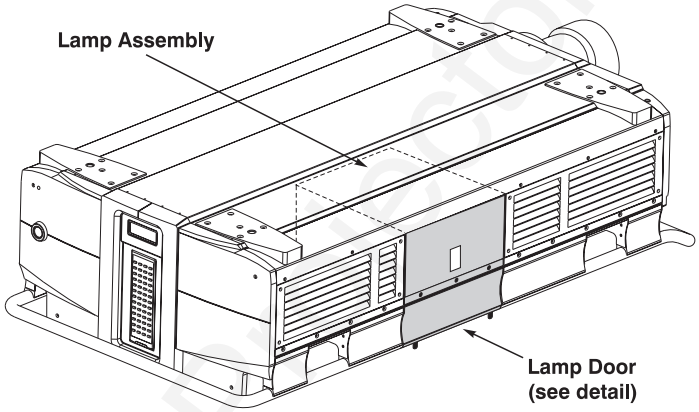

Figure 4-2. Lamp Door

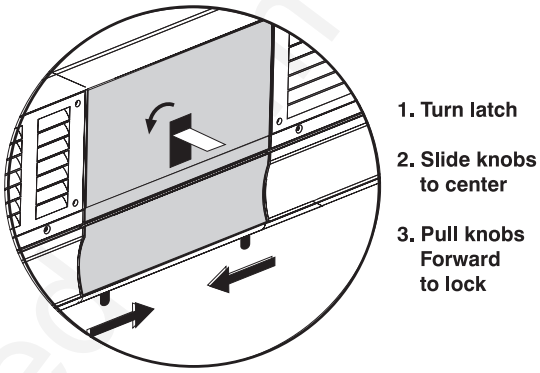

- Pull the door down from the top edge of the projector to fully open the door and reveal the internal lamp bracket and lamp assembly.

Figure 4-3. Remove Lamp Door

STEP 4 ➤ Remove lamp bracket

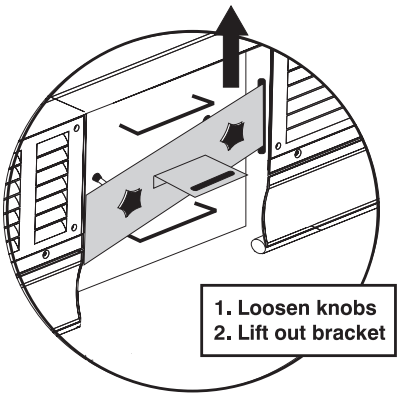

Loosen both bracket knobs. Pull the bracket straight up, lifting one end up until it is free from its slot in the lamp cavity, and remove. See Figure 4-4.

Figure 4-4. Remove bracket

Downloaded from Projector.com

STEP 5 ➤ Remove old lamp assembly

Grasp the top and bottom handles of the lamp assembly and pull the assembly straight out of the projector (Figure 4-5). Pull firmly while keeping the assembly level.

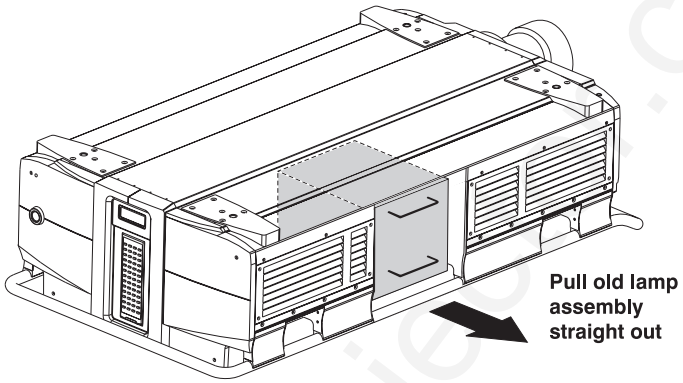

Figure 4-5. Remove old lamp assembly

STEP 6 ➤ Return the old lamp assembly

Place the old lamp assembly in the new lamp box ***and send it to your nearest Electrohome service depot for re-lamping*** (see back cover of this manual). Make sure the lamp is packed properly and label the carton "freight collect" for free shipping.

NOTE: Your voluntary participation in this relamping program is strongly encouraged, and helps ensure that Electrohome can continue to offer economical replacement lamps having the same warranty as new. Once you have returned a used lamp, you are entitled to the purchase of an economical "re-lamped" lamp module.

STEP 7 ➤ Insert the new lamp assembly

With the lamp lens facing the projector, align the lamp assembly with the lamp compartment — handles are on the top and bottom. Carefully slide the assembly into the projector (Figure 4-6). When it feels as though it is in place, push very firmly once more to ensure that the unit is properly seated as far back as possible.

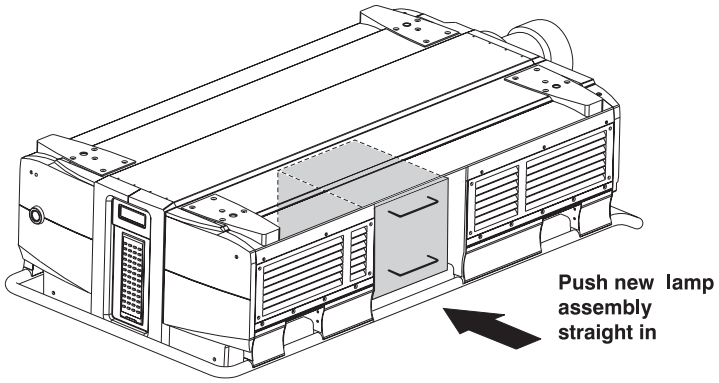

Figure 4-6. Install new lamp assembly

Downloaded from Projector.com

⚠ WARNING
Do not bump or touch lamp lens surface.

⚠ WARNING
Replace with an Electrohome lamp only. Never try to operate the projector with any other type of lamp.

STEP 8 ➤ *Replace the lamp bracket*

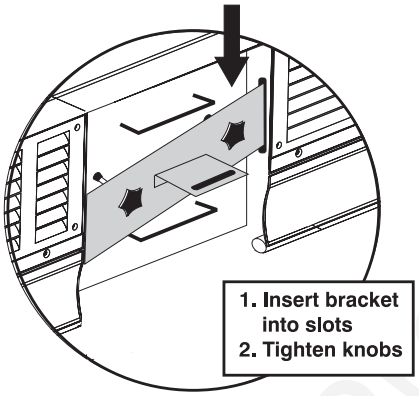

Figure 4-7. Replace bracket

Set the lamp bracket into the slots on the side of the lamp compartment, making sure both ends seat securely at the bottom of the slots. Hand tighten the 2 knobs firmly so that the lamp is secured as far back into the projector as possible. See Figure 4-7.

STEP 9 ➤ *Align the lamp*

IMPORTANT: Align as per the instructions supplied with your *VistaGRAPHX 10K Lamp Assembly and Filter Replacement Kit*. **ALIGNMENT IS MANDATORY** for this projector, and must be performed whenever the lamp module is replaced or moved.

STEP 10 ➤ *Replace the lamp door*

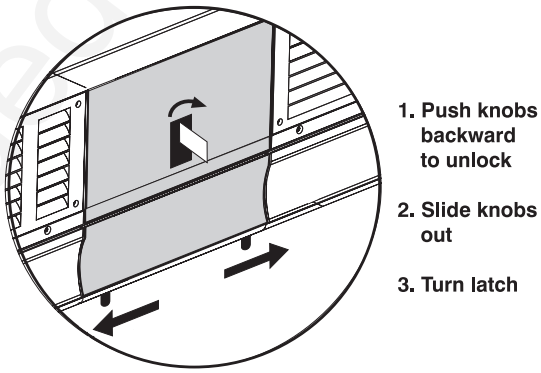

Figure 4-8. Replace Door

See Figure 4-8. Insert the top edge of the lamp door under the projector top lid. Swing the lid down into place and release the bottom spring fasteners. Slide the fasteners firmly away from each other to lock into the projector handle. Secure top latch.

STEP 11 ➤ *Replace side filters*

Replace the 2 side filters whenever the lamp is replaced (or more frequently if the operating environment is outdoors or is very dusty). These filters lie along the right side panel of the projector, running from the front edge to about 9 inches from the rear.

Downloaded from Projector.com

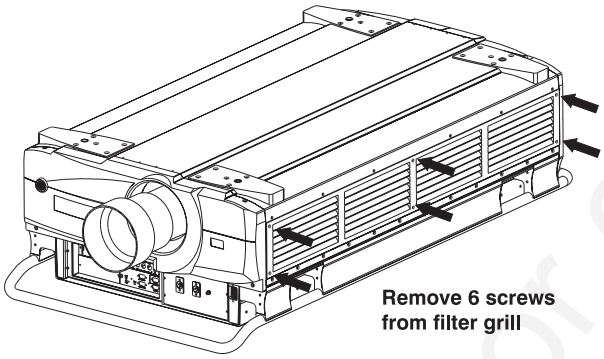

Figure 4-9. Remove filter grill

Unscrew the 6 screws securing the filter grill to the projector (Figure 4-9). Pull out the old filters and replace with the new, wire side out. Align the first filter to the front edge of the projector and follow with the second so that the last 9 inches (approx.) are not covered by filter. See Figure 4-10. Replace the grill and secure with the 6 screws.

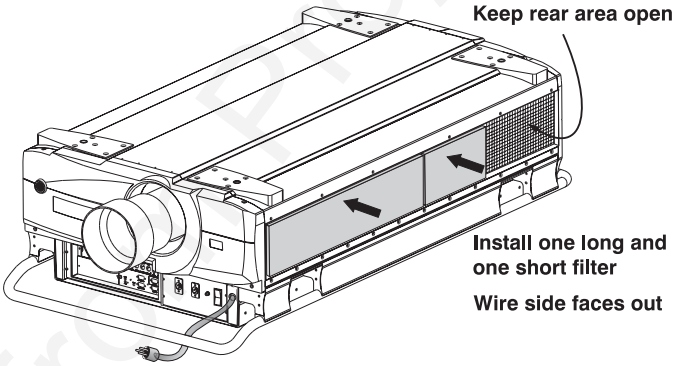

Figure 4-10. Install Long and Short Filters

⚠ WARNING

For safety, use filters supplied by Electrohome only. Never operate the projector without the filters installed.

STEP 12 ➤ Power up the projector

Plug in the projector and press Power* to turn it on. Allow the projector to warm up for about five minutes.

STEP 13 ➤ Reset the lamp timer

In the *Status* menu, call up the "Lamp Changed" text box and enter the new lamp serial number (see *Section 3, Operation* if you need help entering text). Once the serial number is entered, the lamp timer will automatically reset to "0" hours and begin to log time.

IMPORTANT

If you neglect to enter a serial number, the lamp timer will not reset to "0" and will therefore be inaccurate. The lamp lifetime may then prematurely expire.

Downloaded from Projector.com

NOTE: Once entered, the new lamp serial number is also automatically added to the "Lamp History" list in the Service menu (password-protected). Lamp life data is required for warranty claims.

4.5 Replacing the Lens

A variety of *VistaGRAPHX 10K* lenses are available to accommodate different throw distances and specific types of installations. See page 5-1 for details. To change a lens, follow the steps below.

Step 1 ➤ Turn off the projector, cool, and unplug.

Before removing or installing a lens, turn off the projector and allow to cool for five minutes before unplugging. Make sure that the lens cap is on.

⚠ WARNING
Always cool and unplug the projector before removing or installing a lens.

⚠ IMPORTANT
Make sure the lens cap is on before removing or installing a lens.

Step 2 ➤ Remove the lens

Make sure the projector is unplugged. Grasp the lens assembly near the point where it enters the projector and slowly unscrew (counter-clockwise) until the assembly is free from the projector. Use both hands and take care not to touch the lens surface, which is easily damaged. Set aside.

NOTE: To remove a motorized zoom lens, loosen the 3 thumbscrews securing the zoom adapter collar to the lens zoom ring. These screws are located around the perimeter of the collar. Remove both the lens and the adapter collar.

Step 3 ➤ Install the new lens

FIXED (NON-ZOOM) - Make sure the new lens is protected by the lens cap. Install the new lens in the projector by carefully screwing the assembly into the projector just until snug. If the lens assembly seems difficult to turn, it may be cross-threaded. Carefully remove and try again. Use both hands and do not force or over-tighten.

MOTORIZED ZOOM - Make sure the *VistaGRAPHX* ILS® zoom lens is protected by a lens cap. Then:

a) Insert the new zoom adapter collar (available separately) into the empty lens area of the projector, aligning the collar pin to the slot in the projector (Figure 4-11). Fully *loosen* all 3 collar thumbscrews.

Downloaded from Projector.com

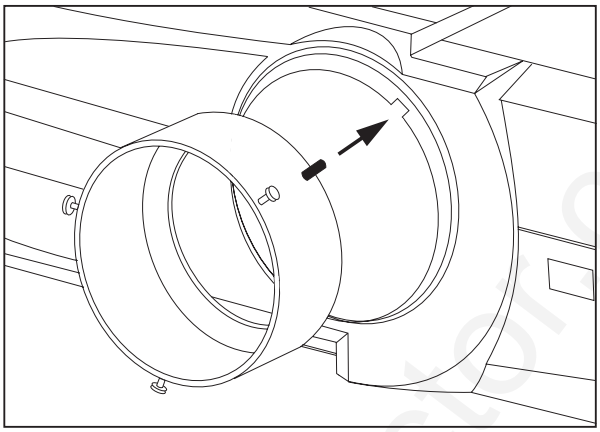

Figure 4-11. Align adapter collar pin to slot in projector

b) Screw the lens into the projector as described above for non-zoom lenses.

c) Remove the lens cap. Plug in the projector, turn it on (Power*) and allow a brief warm up.

d) On the keypad, press Lens or Menu 1 0 to access the *Lens* menu. Set the lens *Zoom* setting to 97 (maximum). See Figure 4-12.

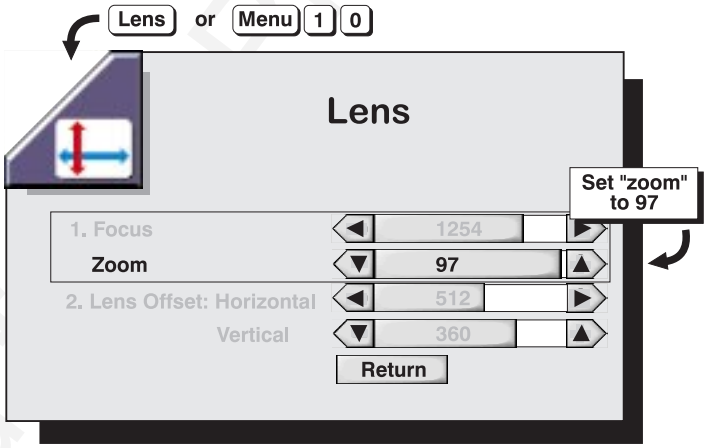

Figure 4-12. Set "Zoom" to 97

e) Face the front of the projector and manually turn the lens zoom ring counter-clockwise as far as possible (see Figure 4-13). Then turn clockwise very slightly — about an eighth of an inch.

Downloaded from Projector.com

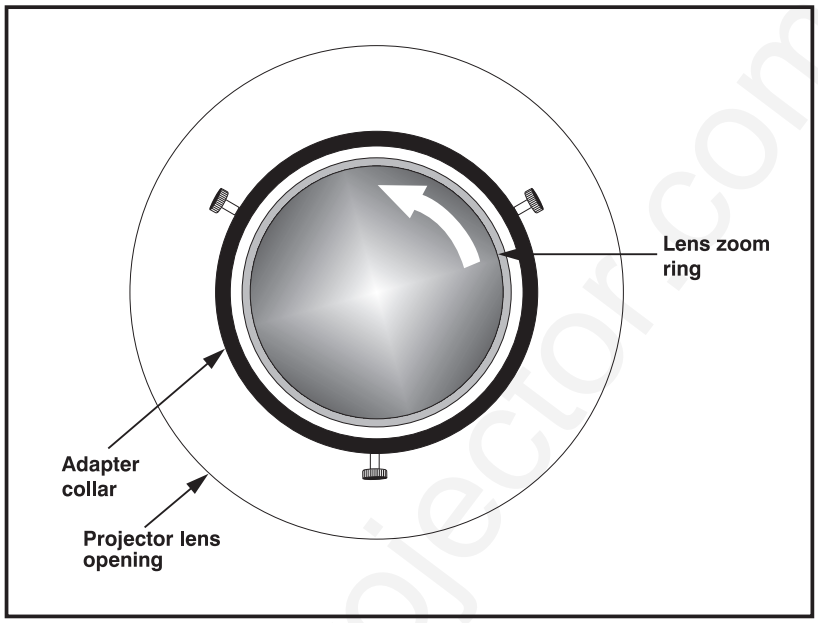

Figure 4-13. Turn lens zoom ring ALMOST as far as possible

IMPORTANT

Make sure to adjust the zoom setting to 97 and to turn the lens zoom ring counter-clockwise as described. This will prevent subsequent zoom settings from pushing the lens out of the projector.

f) Turn off and unplug the projector. Gradually tighten the 3 thumbscrews equally, taking care to keep the adapter collar and lens centered with one another (Figure 4-14). The adapter collar should be securely attached to the lens zoom ring when you are done.

NOTE: The adapter collar enables remote (motorized) zoom in the projector. To adjust zoom manually, do not install this collar.

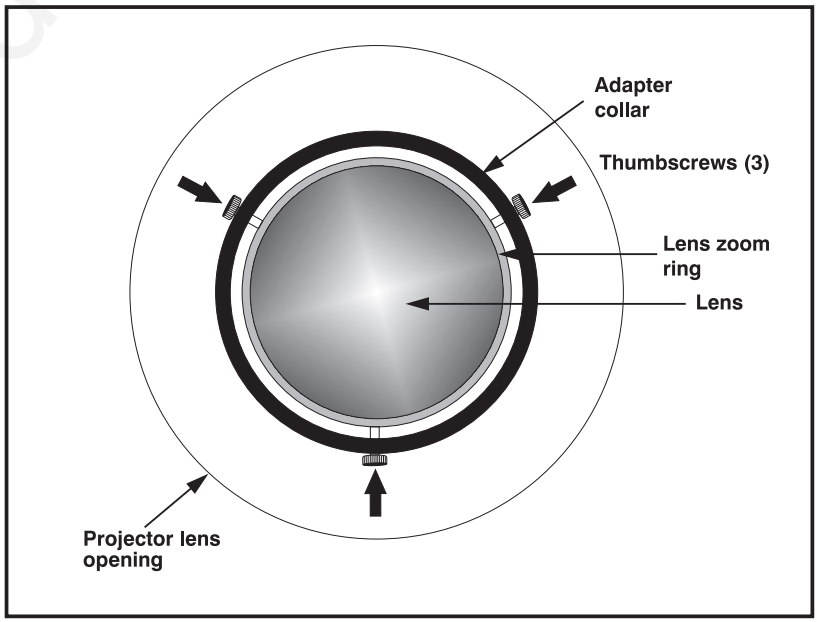

Figure 4-14. Tighten 3 thumbscrews equally

Downloaded from Projector.com

Step 4 ➤ Reposition the projector

Remove the lens cap and reposition the projector closer to or further from the screen as necessary for the screen and new lens type. For example, if using a 2.5:1 lens, throw distance should be roughly equal to 2.5 x the screen width. For accuracy in a permanent installation, always use the appropriate throw distance from *Appendix E*. Power up and test. Adjust vertical offset as necessary so that display is rectangular.

NOTE: If you install one of the larger Vista lenses you may need to adjust the lens mount tilt UP slightly to compensate for increased gravitational pull on these heavier lenses. On the front bezel of the projector, remove the very small cap located near the top of the lens (at approximately 11 o'clock). Insert a 9/64" Allen key until it seats on the internal hex screw—you may have to move the horizontal offset for access. Turn the screw slightly to adjust the lens tilt UP as necessary.

4.6 Troubleshooting

If the projector is not operating properly, note the symptoms of the problem and use the following guide to assist you. If you cannot resolve the problem yourself, contact your dealer for assistance.

Symptom ➤ The projector will not turn on when [Power*] is pressed...

CAUSE / REMEDY:

1. Make sure that [Power*] is held down for approximately one second. Or press [Power*] quickly and release, and follow with [▲ON].
2. Are both LEDs ON at the front of the projector? Check that the power cord is properly connected at the wall outlet (220-240 VAC, 50-60 Hz nominal).
3. Has the circuit breaker tripped to OFF? If so, switch the breaker back to ON and try [Power*] again.
4. Does the green "Status" LED flash with each key press? If not, *VistaGRAPHX 10K* is not receiving the keypad's IR signals. Ensure the keypad is directed at either the front or rear of the projector, or at the screen. Also make sure that the path between the IR keypad and the projector (or screen) is not blocked.
5. The batteries in the IR remote keypad may be weak. Refer to *4.3, Replacing Keypad Batteries* for instructions.
6. The IR keypad may have been disabled by a change in protocol. See *2.10, Keypad Protocols* and *3.7, Adjusting and Checking System Parameters*.
7. Use the [Power*] key on the built-in keypad to turn the projector on.

Symptom ➤ The projector is on but there is no display of source input...

CAUSE / REMEDY:

1. Is an active source connected properly? Check the cable connections. Is that source selected? Press [Input1], [Input2], [Input3], or [Input4] to select the location of the source connections. See *2.4, Source Connections* and *3.5, Working with Inputs and Channels*.
2. The room lighting may be too bright. Lower the intensity of the room lighting. Reduce light reflections as much as possible.
3. Increase contrast and/or brightness of image.
4. The projector may be too far from the screen. Move the projector closer to the screen.

Downloaded from Projector.com

5. Is the "Status" LED flashing a pattern of yellow and red lights while the "Power" LED is steady red? This pattern indicates an internal system error. If the problem persists contact a qualified Electrohome service technician.
6. Was the lens cover accidentally left on? Remove lens cover.

Symptom ➤ The projector does not respond to the infrared remote keypad...

CAUSE / REMEDY:

1. Does the green "Status" LED flash each time a key is pressed? If not, *VistaGRAPHX 10K* is not receiving the keypad's IR signals. Ensure the keypad is pointed either at the front or rear of the projector, or at the screen.
2. The viewing path between the IR keypad and the projector (or screen) may be blocked. Ensure there is a clear line-of-sight between the keypad and the projector (or screen).
3. The batteries in the IR remote keypad may be weak. Refer to *4.3, Replacing Keypad Batteries* for instructions on how to replace the batteries.
4. There may be unusual lighting conditions in the room affecting IR keypad operation. Determine if such conditions exist and correct.
5. The IR keypad may have been disabled for use with this projector(s). See *2.10, Keypad Protocols* and *3.7, Adjusting and Checking System Parameters*.

Symptom ➤ The power is on but the lamp is not...

CAUSE / REMEDY:

1. The projector probably became overheated. Allow to cool and make sure that nothing blocks projector vents. Do not operate in environments warmer than 40°C (104°F).
2. The lamp may have reached the end of its 1000-hour life. Check the Lamp Hours entry in the *Status* menu. Replace the lamp assembly as described in *4.4, Replacing the Lamp and Filter*.

Symptom ➤ The display is jittery or unstable...

CAUSE / REMEDY:

1. If the display is jittery or if it disappears and reappears erratically, check that the source is properly connected and that its signal is of adequate quality for detection. For example, the projector scans the default input Input1 d for a signal to display. If a poor quality or improperly connected source is connected, the projector will briefly and repeatedly attempt to display an image. If no source is connected, the "No signal present" error message appears over a blank display. Correct the source connection.
2. The horizontal or vertical scan frequency of the input signal may be out of range of the projector. Refer to *Section 5, Specifications* for scan frequency ranges.
3. Sync signal may be inadequate. Correct the source problem.
4. The input signal type may conflict with the input module. Install the correct module to match that of the source.
5. Pixel tracking and phase may need adjustment.

Symptom ➤ The display is faint...

CAUSE / REMEDY:

1. Brightness and/or contrast may be set too low. Increase the brightness and/or contrast settings.

Downloaded from Projector.com

2. The projection room may be too bright. Lower the intensity of projection room lighting and reduce light reflections as much as possible.
3. The projector may be too far from the screen. Move the projector closer.
4. The location of the audience with respect to the screen may not be ideal. Make sure the audience is within the viewing angle set by the projector and screen position, and the screen type.
5. The source may be double terminated. Ensure the source is terminated only once.
6. The source (if non-video) may need sync tip clamping. Enter a check in the "Sync Tip Clamping" box found in the *Image Settings* menu.

Symptom ➤ The display is reversed and/or upside down...

CAUSE / REMEDY:

1. The projector's image orientation is not set correctly for the current installation. Refer to *2.6, Operating Orientation*, to set the projector's image orientation to match your installation.

Symptom ➤ The upper portion of the display is waving, tearing or jittering...

CAUSE / REMEDY:

1. This sometimes occurs when the source is a VCR or video signal. If you are using a VCR, enter a checkmark in the "VCR" checkbox within the *Image Settings* menu.

Symptom ➤ Portions of the display are cut off or wrap to the opposite edge...

CAUSE / REMEDY:

1. Reduce top, bottom, left or right blanking from within the *Size / Position* menu.
2. Horizontal/vertical placement may need adjustment. Adjust until entire image is visible and centered.

Symptom ➤ The display appears compressed or stretched

CAUSE / REMEDY:

1. The frequency of the pixel sampling clock is incorrect for the current source. Adjust pixel tracking up or down.

Symptom ➤ Display quality appears to drift from good to bad, bad to good...

CAUSE / REMEDY:

1. The operating temperature of the projector may not be constant. Watch that the projector is not located too close to heating/air conditioning vents.
2. The source input signal may be of low quality.
3. The horizontal or vertical frequency of the input may have changed at the source end.

Symptom ➤ The display has suddenly frozen, or an unknown menu has appeared…

CAUSE / REMEDY:

1. You may have accidentally entered a special engineering code using the Func key in combination with certain numbers. Press Exit to cancel the function and return to presentation level.
2. If the screen blacks out, it is possible that excessive voltage noise on the AC or ground input has interrupted the projector's ability to lock on to a signal. Turn the projector off, wait for the lamp fans to stop, and unplug. Plug in again and power up as usual.

Downloaded from Projector.com

Symptom ➤ The display is not sharp or "clean"...

CAUSE / REMEDY:

1. Display adjustment may be required. Use the Lens key to adjust focus, then adjust brightness, contrast and detail.
2. Is a BNC T-connector being used? Use a distribution amplifier to boost signal levels.
3. Is the video input signal properly terminated? Set in *Preferences* menu.
4. The screen size may be too large. As screen size increases, magnification increases, reducing brightness.
5. The source input signal may be of low quality.

Symptom ➤ Colors in the display are inaccurate...

CAUSE / REMEDY:

1. The color, tint and/or color temperature settings may require adjustment from within the *Image Settings* menu.

Symptom ➤ The display is not rectangular...

CAUSE / REMEDY:

1. Is the vertical offset adjusted correctly for the current throw distance? Adjust as necessary in the *Lens* menu (press Lens) or move the projector.
2. Is the projector lens surface parallel to the screen? See *2.7, Leveling.*

Symptom ➤ The display is "noisy"...

CAUSE / REMEDY:

1. Display adjustment may be required. Adjust pixel tracking and phase.
2. The video input may not be terminated. Make sure the video input is terminated (75 Ω). If it is the last connection in a loop-through chain, the video input should be terminated at the last projector only.
3. The signal cables carrying the input signal may be of poor quality. Use only good quality signal cables. Electrohome cables are recommended.
4. The distance between the input source device and the projector may be too great. If the distance between the input source device and the projector is greater than 25 feet, signal amplification/conditioning may be required.
5. The input signal may be of poor quality.
6. If the source is a VCR or off-air broadcast, detail may be set too high.

Downloaded from Projector.com

Downloaded from Projector.com

Section 5

Specifications

5.1 Specifications
VistaGRAPHX 10K

NOTE: Due to constant research, specifications are subject to change without notice.

Display ➤

Resolution

Pixel format (H x V)	1024 X 768
Maximum digitizing sample rate	80 MHz
Effective RGB bandwidth	120 MHz
Video luminance bandwidth	5.0 MHz

Brightness

up to 10000 ANSI lumens

Contrast Ratio

over 160:1 ANSI
over 300:1 full field

Colors and Gray Scale

Displayable colors	16.7 million
Gray scale resolution	8 bits

Color Temperature

Range of Adjustment	3200 K to 10000 K

VistaGRAPHX 10K Lenses ➤

Note: An adapter collar must be installed for remote control of any zoom lens.

Lens Type	Diagonal Screen Size (ft.)	Offset Range (in pixels)	Max. Geometric Distortion
0.8:1	5-25	± 384	0.5%
1:1	6-30	± 150	0.5%
2.3:1	6-30	± 325	0.5%
3.9:1	9.6-36	± 250	0.5%
5.5:1	9.6-36	± 150	0.5%
1.2 - 2.3:1 zoom	9.6-36	± 80	2%
1.5 - 2.5:1 zoom	6-40	± 384	2%
2.5 - 4:1 zoom	6-40	± 384	2%
2.3 - 5.5:1 zoom	9.6-36	± 125	2%
4 - 7:1 zoom	10-40	± 384	2%

NOTE: The 1:1 lens is the same as the *VistaPro 1.2:1 lens*
The 2.3:1 lens is the same as the *VistaPro 3:1 lens*
The 3.9:1 lens is the same as the *VistaPro 5:1 lens*
The 5.5:1 lens is the same as the *VistaPro 7:1 lens*
The 1.2-2.3:1 lens is the same as the *VistaPro 1.5-3 lens.*
The 2.3-5.5:1 lens is the same as the *VistaPro 3-7:1 zoom lens.*

Downloaded from Projector.com

Inputs ➤

Number of inputs	2 RGBHV (second input via plug-in module) 2 Video (standard on N. American model only)

RGB

Horizontal frequency range	15 - 100 kHz *
Vertical frequency range **	45 -120 Hz
Pixel clock rate	10 - 80 MHz
Signal format	Analog RGB
Input level	$0.5V_{p-p}$ - $1.4V_{p-p}$
DC offset	± 5V
Impedance	75 ohms
Return loss (VSWR)	1.2

* *Display quality may be limited by pixel sampling rate when at the higher end of the frequency range.*

** *Maximum vertical output rate = 60Hz. H and V frequencies of the input source and of the DMDs may not be the same. If using a back porch clamp, the back porch needs to be at least 1.1 µsec.*

Video *(optional)*

Signal formats	Composite (CVBS), S-Video (Y/C)
Video standards	NTSC, PAL, & SECAM
Input level, Composite	1.0 V_{p-p} ± 3db (including sync tip)
Input level, S-Video, Luminance (Y)	1.0 V_{p-p} ± 3db (including sync tip)
Input level, S-Video, Chrominance (C)	630 mV_{p-p} nominal (burst)
DC offset	± 5V
Impedance	75 ohms
Return loss (VSWR)	1.2 maximum

Sync

Input levels	$0.5V_{p-p}$ - $5.0V_{p-p}$ (±5V offset)
Impedance	75 ohms
Type	Sync-on-green, Composite, Separate H and V
Polarity	Positive or negative
Duty cycles	0.10% - 20% vertical 3% - 20% horizontal

RS-232 Serial Input

Number of connectors	3 (1 network in, 1 network out, 1 for switcher control)
Connector type	9 pin D

RS-422 Serial Input

Number of connectors	2
Connector type	9 pin D *or* 6-pin XLR

Wired Control Input (optional)

Optional wired keypad	3-pin XLR connector
Input level	High 2.0V min., Low 0.7V max.
Optional 2-way controller	6-pin XLR connector

Downloaded from Projector.com

Power Requirements ➤	Voltage range (auto switching)	220 - 240 VAC
	Line frequency	50 - 60 Hz nominal
	Max. inrush current	60 amps
	Max. current rating	15 amps
	Max. power consumption	2800 watts
	Line cord wiring:	
	black or brown	Live
	white or blue	Neutral
	green or green/yellow stripe	Ground
Lamp ➤	Type	SHB 1.8 kW Xenon short arc, open
	Adjustment range	1.0 - 1.8 kW
	Operating angle	any vertical angle, ±15° horizontal
	Warm up period to full brightness	5 minutes
	Rated life	1000 hours to half intensity
IR Control ➤	Typical range	100', line-of-sight
	IR carrier frequency (subcarrier modulated)	336 kHz
	Number of batteries	4
	Battery type	AA 1.5 V (Alkaline cells)
	Battery life	1 year shelf, 1 month continuous use
	Backlight	LED array
Size & Weight ➤	Size (product only, W x L x H — incl. handles)	29” (73.7 cm) x 54” (137.2 cm) x 16” (40.6 cm)
	Size of shipping box (W x L x H)	40” (101.6 cm) x 63” (160 cm) x 32” (81.3 cm)
	Weight of product, no lens	220 lb. (100 kg)
	Shipping weight	310 lb. (149 kg)

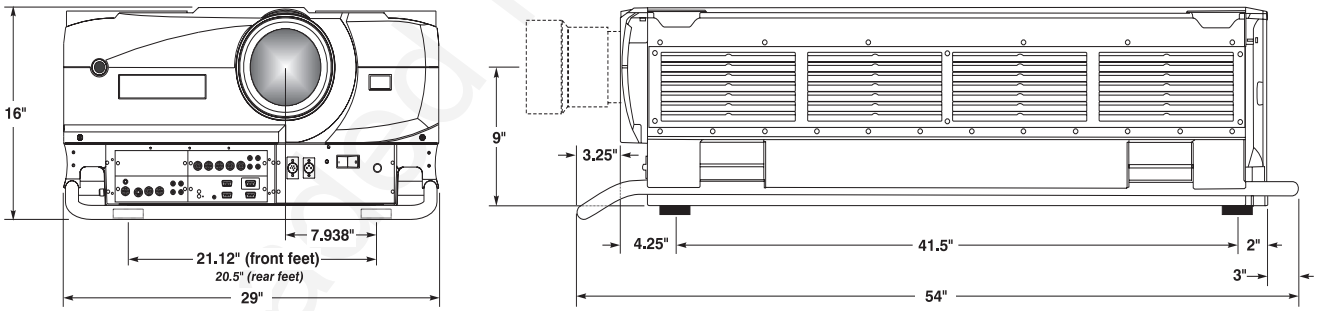

Figure 5-1. Projector Dimensions

Safety ➤ C.S.A. C22.2.950 (M94) approved to U.L. 1950 by NRTL (Semko) EN60950

EMI ➤ 47CFR 2&15 (FCC) Class A - U.S. - Conducted and Radiated Emissions Stds.
CRC 1374 (DOC) Class A - Canadian - Conducted and Radiated Emissions Stds.
Emissions per EN50081-1. Immunity per EN50082-1.

Operating Environment ➤	Temperature	0°C to 35°C (32°F to 95°F)
	Humidity (non-condensing)	20% to 80%
	Altitude	0 - 3000 meters

Downloaded from Projector.com

Standard Components ➤

IR (infrared) Remote Keypad — includes batteries
Integral AC line cord, 30 amps
VistaGRAPHX 10K User's Manual
Warranty card
½”-13 x 1½” eye bolts for safety / hoisting (4)

Optional Accessories ➤

Video Decoder Module
Wired Remote Keypad
2-Way Controller
IR Remote Sensor
Alternate Throw Lenses
Marquee Signal Switcher
RGB Input Module
RGB Loop-Through Module
Composite/S-Video Module
Vista Digital Interface
HDTV Input Module
PC Analog Input Module

Downloaded from Projector.com

Appendix A

Glossary

This appendix defines the specific terms used in this manual as they apply to *VistaGRAPHX 10K*. Also included are other general terms commonly used in the projection industry.

Active Line Time ➤ The time, inside one horizontal scan line, during which video is generated.

Ambient Light Rejection ➤ The ability of a screen to reflect ambient light in a direction away from the "line of best viewing". Curved screens usually have good ambient light rejection. Flat screens usually have less ambient light rejection.

Analog Video ➤ The video output of most computers and video tape machines. Analog video can generate a large number of colors.

Aspect Ratio ➤ The ratio of the width of an image to its height, such as the 4:3 aspect ratio common in video output.

Auto Source ➤ The ability of the projector to automatically recognize and synchronize to the horizontal and vertical scan frequencies of an input signal for proper display.

Bandwidth ➤ The frequency range of the projector's video amplifier.

Baud Rate ➤ The speed at which serial communications travel from their origin. The *VistaGRAPHX 10K* default baud rate of 9600 can be changed to match a controlling device.

Blanking Time ➤ The time inside one scan line during which video is not generated. The blanking time of the input signal must be equal to or greater than the retrace time of the projector.

Brightness ➤ In projection, brightness usually describes the amount of light emitted from a surface such as a screen. It is measured in foot-lamberts or candelas per square meter.

Candela or Candle ➤ Unit of measure for measuring intensity of light.

Channel ➤ A collection of measurements stored by the projector for a given input source, including frequencies, pulse width, polarity, syncs, channel number and location, user-adjustable display settings, etc. Use channels to switch between a variety of inputs quickly, automatically recalling previous display setups.

Channel List ➤ A list/menu of previously-defined channels available in the projector.

Downloaded from Projector.com

Channel Number ➤ A number that uniquely identifies a specific channel retained in projector memory. The projector can retain up to 99 channels.

Checkbox ➤ A menu item that indicates whether an option is currently in effect (checked) or not (unchecked).

Color Shift ➤ A change in the tint of a white field across an image.

Color Temperature ➤ The coloration (reddish, white, bluish, greenish, etc.) of white in an image, measured using the Kelvin (K) temperature scale. Higher temperatures output more light.

Component Video ➤ See *YUV Video*.

Composite Video ➤ The output of video tape players and some computers, characterized by synchronization, luminance and color signals combined on one output cable.

Contrast (ratio) ➤ The degree of difference between the lightest and darkest areas of the image.

Convergence ➤ The alignment of the red, green, and blue elements of a projected image.

Curved Screen ➤ A projection screen which is slightly concave for improved screen gain. Curved screens usually have screen gains which are greater than 1 but viewing angles much less than 180°.

DDI ➤ Direct Digital Interface signal, supplied on the projector via the optional *Vista Digital Interface*. This signal is more commonly called a serial digital 4:2:2 component video (YCrCb) signal.

DMD™ ➤ Digital Micromirror Devices™ used in the *VistaGRAPHX 10K* for processing red, green, and blue color data.

Decoder ➤ An optional device in the projector that converts NTSC 3.58, NTSC 4.4, PAL, PAL-N, PAL-M, or SECAM to RGB video.

Detail ➤ The sharpness of a display from a video source.

Diffused Screen ➤ A type of rear-projection screen which spreads the light striking it. Screen gain is less than 1 but audience viewing angles are increased.

Display Setting ➤ An adjustment that affects the display of an image. Such display settings include contrast, brightness, tint, blanking, focus, offsets, etc.

Flicker ➤ A very rapid variation in image brightness caused by a frame rate that is too slow. (See *Interlace*.)

Frame Rate ➤ The frequency at which complete images are generated. For non-interlaced signals, the frame rate is identical to the vertical frequency. For interlaced signals, the frame rate is one half of vertical frequency.

Foot-candle ➤ The intensity of visible light per square foot.

Foot-lambert ➤ The luminance (brightness) which results from one foot-candle of illumination falling on a perfectly diffuse surface.

Downloaded from Projector.com

Gain or Screen Gain ➤ The ability of a screen to direct incident light to an audience. A flat matte white wall has a gain of approximately 1. Screens with gain less than 1 attenuate incident light; screens with gain more than 1 direct more incident light to the audience but have a narrow viewing angle. For example: An image reflecting off a 10 gain screen appears 10 times brighter than it would if reflected off a matte white wall. Curved screens usually have larger gain than flat screens.

Help Screen ➤ A display of help information on the projection screen.

Horizontal Frequency ➤ The frequency at which scan lines are generated, which varies amongst sources. Also called horizontal scan rate or line rate.

Horizontal Offset ➤ The difference between the horizontal position of the projector lens and the center of the lens.

Hot Spot ➤ A circular area of a screen where the image appears brighter than elsewhere on the screen. The hot spot always appears along the line of sight and "moves" with the line of sight. High gain screens and rear screens designed for slide or movie projection usually have a hot spot.

ILS ➤ The *VistaGRAPHX Intelligent Lens System*® describes the ability to automatically return to lens settings previously defined for a particular channel.

Input ➤ A physical connection route for a source signal, described by a 2-digit number representing 1) its switcher/projector location and 2) its slot.

Input Signal ➤ Signal sent from a source device to the projector.

Interface ➤ A device, such as VDI, that accepts an input signal for display by the projector.

Interlace ➤ A method used by video tape players and some computers to double the vertical resolution without increasing the horizontal line rate. If the resulting frame rate is too low, the image may flicker depending on the image content.

Keypad ➤ A small push-button device for controlling projector settings and operation. For more information, refer to *3.3, Using the Keypad.*

Keystone ➤ A distortion of the image which occurs when the top and bottom borders of the image are unequal in length. Side borders both slant in or out, producing a keystone shaped image.

Linearity ➤ The reproduction of the horizontal and vertical size of characters and/or shapes over the entire screen.

Line of Best Viewing ➤ When light from a projector is incident on a screen, the light reflects from the screen such that the angle of reflection equals the angle of incidence. The Line of Best Viewing is along the line of reflection.

Loopthrough (Loopthru) ➤ The method of feeding a series of high impedance inputs from a single video source with a coaxial transmission line in such a manner that the line is terminated with its characteristic impedance at the last input on the line.

Lumen ➤ The amount of visible light emitted by a light source is measured in lumens.

Downloaded from Projector.com

Lux ➤ The amount of visible light per square meter incident on a surface.
1 lux = 1 lumen/square meter = 0.093 foot-candles

Menu ➤ A list of selectable options displayed on the screen.

NTSC Video ➤ A video output format of some video tape and disk players. There are two types of NTSC (National Television Standards Committee) video: NTSC 3.58 and NTSC 4.43. NTSC 3.58 is used primarily in North America and Japan. NTSC 4.43 is less commonly used.

Optical Screen ➤ A type of rear-projection screen which re-directs light through the screen to increase image brightness in front of the screen. Screen gain is usually greater than 1 but audience viewing angles are reduced.

PAL Video ➤ PAL (Phase Alternating Line) video is a 50 Hz standard with 768 x 576 resolution. It is found on some video tape and disk players (used primarily in Europe, China and some South American and African countries).

Pincushion ➤ A distortion of the image which occurs when the borders are concave or convex.

Pixel (picture element) ➤ The smallest discernible element of data from a computer-generated image.

Pixel Phase ➤ The phase of the pixel sampling clock relative to incoming data.

Pixel Tracking ➤ The frequency of the pixel sampling clock, indicated by the number of pixels per line.

Presentation Level ➤ The projector is at presentation level when an image from a source is displayed without the presence of a slidebar, menu, pull-down list, or error message. For example, if a help page is displayed, the projector is not at presentation level.

Projector-to-Screen Distance ➤ The distance between the projector's front feet and the screen. Also called "Throw Distance”.

Protocol ➤ The type of code format utilized by the remote keypad(s). For any remote *VistaGRAPHX* keypad, the default protocol from manufacture is Protocol C. By using two different keypad protocols, adjacent projectors can be controlled independently with their remote IR keypads.

Pull-down List ➤ A selectable menu item that unfolds into a list of options pertaining to a given parameter.

Rear Screen ➤ A translucent panel for screen projection. Incident light travels through the incident surface of a rear screen and forms an image on the other surface.

Resizing ➤ The ability to manipulate through software commands the physical size, placement and/or aspect ratio of an image.

Resolution (lens) ➤ The maximum number of alternate white and black horizontal lines that can be distinguished on a screen when a photographic target is placed between the lens and a light source, and illuminated by that light source.

Resolution (projector) ➤ The maximum number of pixels that the projector can display horizontally and vertically across an image.

Downloaded from Projector.com

Retrace Time (Horizontal) ➤ The minimum time required for a CRT projector to move the position of the scanning spot from the right edge to the left edge.

Rise Time ➤ The time required by the video amplifier of the projector to increase its output from 10% to 90% of the maximum value.

RGB Video ➤ The video output (analog or digital) of most computers. Analog RGB video can have 3, 4, or 5 wires — one each for red, green, and blue, and either none, one or two for sync. For three-wire RGB, the green wire usually provides sync. (See TTL Video).

RS-232 ➤ A common asynchronous data transmission standard recommended by the Electronics Industries Association (EIA). Also called serial communication.

RS-422 ➤ A less common asynchronous data transmission standard in which balanced differential voltage is specified. RS-422 is especially suitable for long distances.

S-Video ➤ The output from certain video tape players and video equipment. S-Video separates sync and luminance from color information, typically producing a higher quality display than composite video.

Scan Frequency ➤ The horizontal or vertical frequency at which images are generated.

Scan Line ➤ One horizontal line on the display.

SECAM ➤ A video output format of some video tape and disk players (used primarily in France). SECAM (Sequential Couleur á Mémoire) signals are similar in resolution and frequency to PAL signals. The primary difference between the two standards is in the way color information is encoded.

Slidebar ➤ A slidebar is a graphical display of an adjustable setting. The numerical setting usually represents a percentage but can be a specific unit such as degrees Kelvin.

Source ➤ The device, such as a computer or VCR, connected to the projector for display. A source is identified at the projector as Input1, Input2, Input3 or Input4, or as other user-defined numbers. A source may have numerous corresponding channels defined and recognized by the projector. See *Input*.

Source Setup ➤ See *Channel*.

Spot Size ➤ The diameter of the smallest dot that can be generated by a CRT projector. *VistaGRAPHX 10K* has a fixed spot (pixel) size.

Switcher ➤ A signal selector that can be connected to a projector for the purpose of adding more sources.

Sync ➤ This term refers to the part of the video signal that is used to stabilize the picture. Sync can occur in three forms:

1) "Composite sync": the horizontal and vertical components are together on one cable.
2) "Sync-on-green": the sync is part of the green video.
3) "Separate sync" or "H.SYNC and V.SYNC": the horizontal and vertical components of the sync are on two separate cables.

Downloaded from Projector.com

Sync Width ➤ The duration of each sync pulse generated by a computer. The sync width is part of the blanking time.

TTL Video ➤ A type of RGB video with digital characteristics.

Terminated ➤ A wire connecting a single video source to a display device, such as a projector, must be terminated by a resistance (usually 75Ω for video).

Throw Distance ➤ The distance between the front feet of the projector and the screen. Also called "Projector-to-Screen Distance". Always use the correct Electrohome throw distance formula to calculate the precise throw distance required for your lens.

Tint ➤ Balance of red-to-green necessary for realistic representation of NTSC signals.

Variable Scan ➤ The ability of a projector to synchronize to inputs with frequencies within a specified range.

Vertical Frequency ➤ The frequency at which images are generated. Vertical frequencies vary amongst sources. Also called vertical scan rate.

Vertical Offset ➤ The difference between the vertical height of the projector lens and the vertical height of the display. Vertical offset range depends on the type of lens in use.

Video ➤ The signal that is used by display devices (such as projectors) to generate an image. This term also refers to the output of video tape/disk players and computers.

Video Decoder ➤ An optional device that converts NTSC 3.58, NTSC 4.4, PAL, PAL-N, PAL-M or SECAM to RGB video.

Video Standard ➤ A specific type of video signal, such as NTSC, PAL, SECAM. *VistaGRAPHX 10K* can automatically recognize and display the standard and display accordingly.

Viewing Angle ➤ Screens do not reflect equally in all directions. Most light is reflected in a conical volume centered around the "line of best viewing". Maximum brightness is perceived if you are within the viewing cone defined by the horizontal and vertical viewing angles.

VDI ➤ The optional *Vista Digital Interface* can be installed in the projector at Input 2. It accepts serial digital 4:2:2 component video (YCrCb).

White Balance ➤ The color temperature of white used by the projector.

White Field ➤ The area of an image that is white only. For example, a full white field is an image that is white everywhere. A 10% white field is a white area (usually rectangular) that occupies 10% of the image; the remaining 90% is black.

YCrCb / YPrPb Video ➤ See YUV video.

YUV Video ➤ A high-end signal suitable for broadcast. YUV video (also called component video or YCrCb video) by-passes the Vista*GRAPHX* 10K video decoder.

Zoom ➤ The adjustment (remote or manual) of image size through the use of a zoom lens.

Downloaded from Projector.com

Appendix B

Keypad Reference

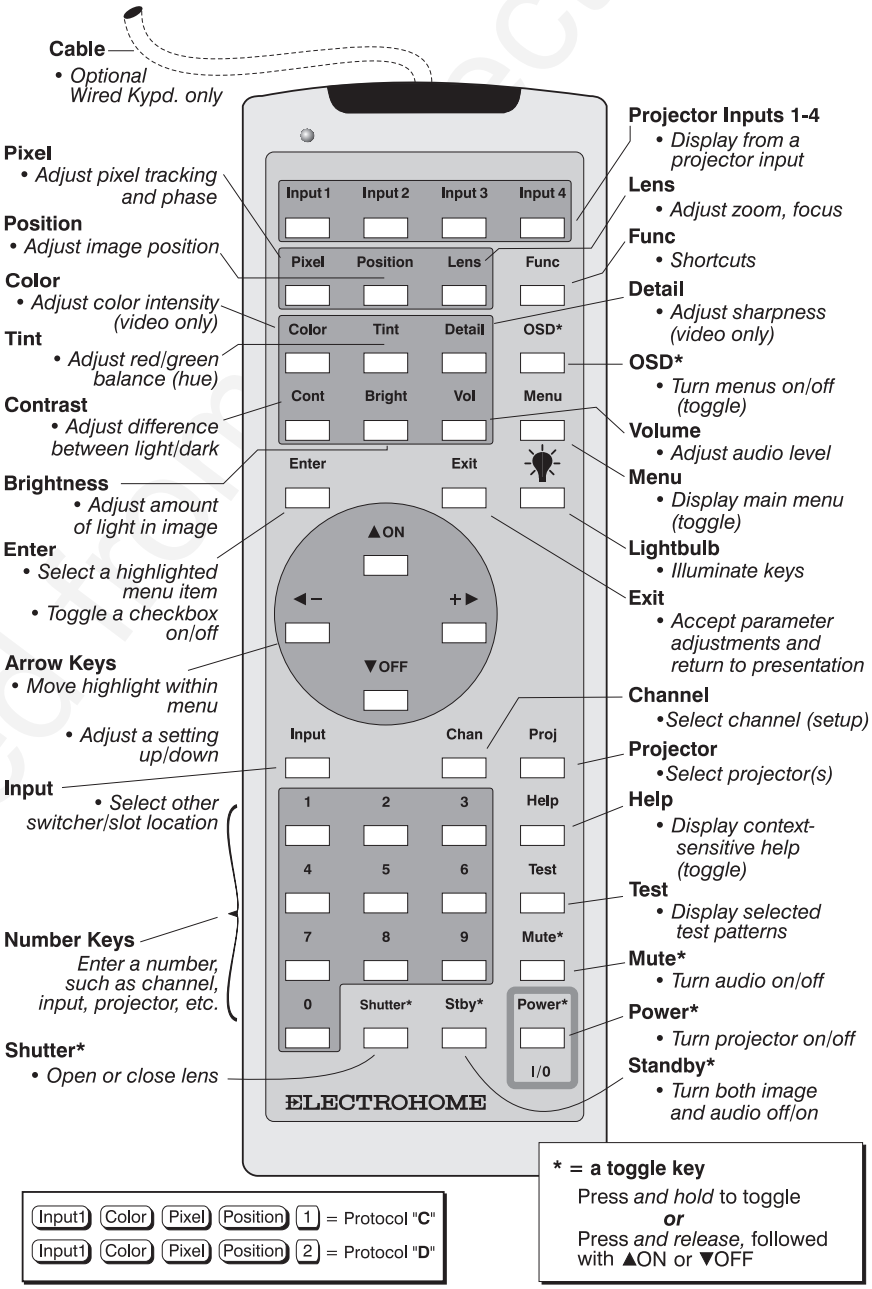

Figure B.1. Keypad

Downloaded from Projector.com

Downloaded from Projector.com

Appendix C

Menu Tree

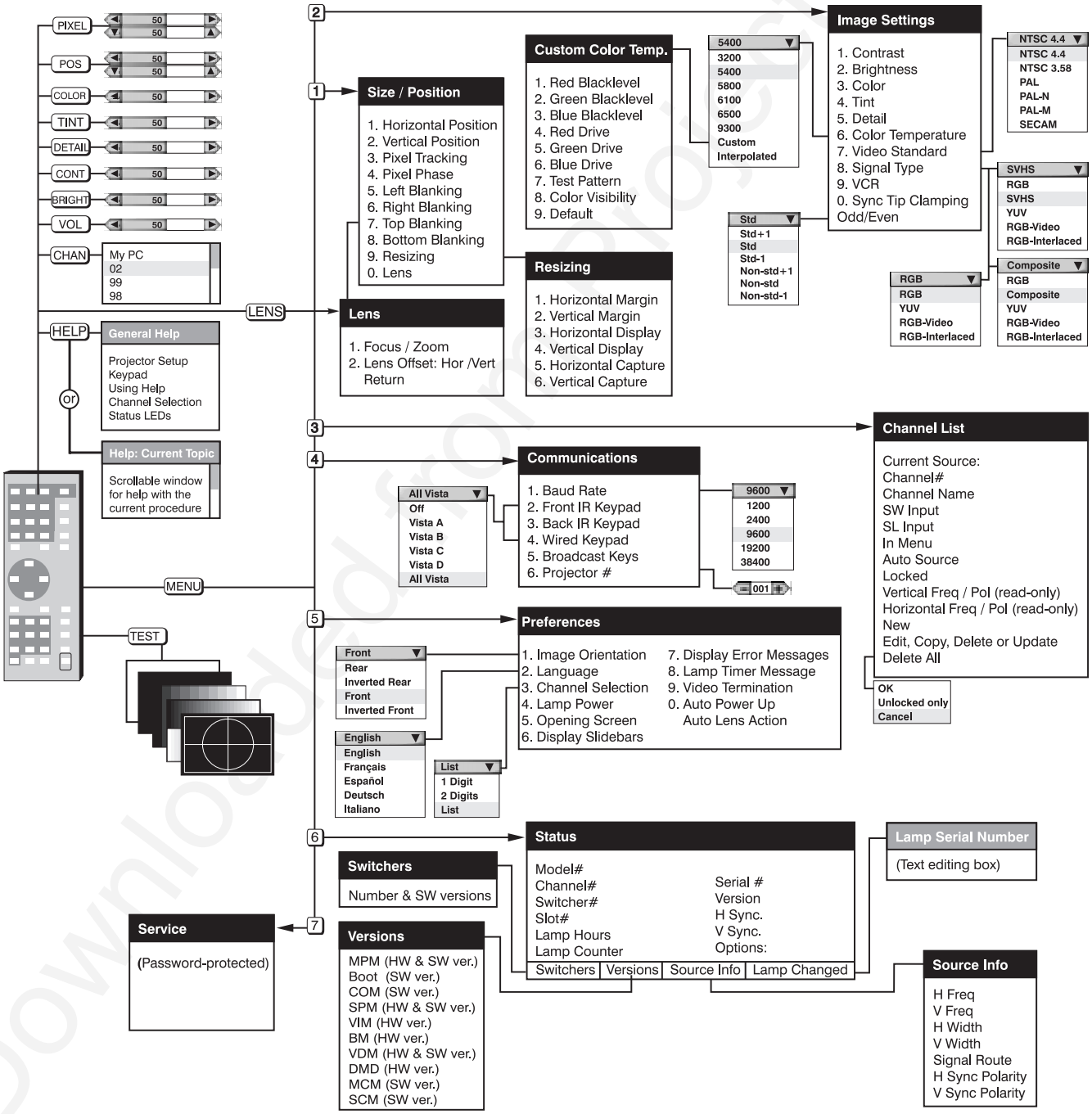

Downloaded from Projector.com

Downloaded from Projector.com

Appendix D

Serial Communication Cables

When connecting the *VistaGRAPHX 10K* to either a computer, another *VistaGRAPHX 10K* projector or a Marquee Signal Switcher, use a standard RS-232 serial communication cable. Cable details are provided below:

❑ *From projector to computer*

For computers having a 9-pin "AT" type serial port

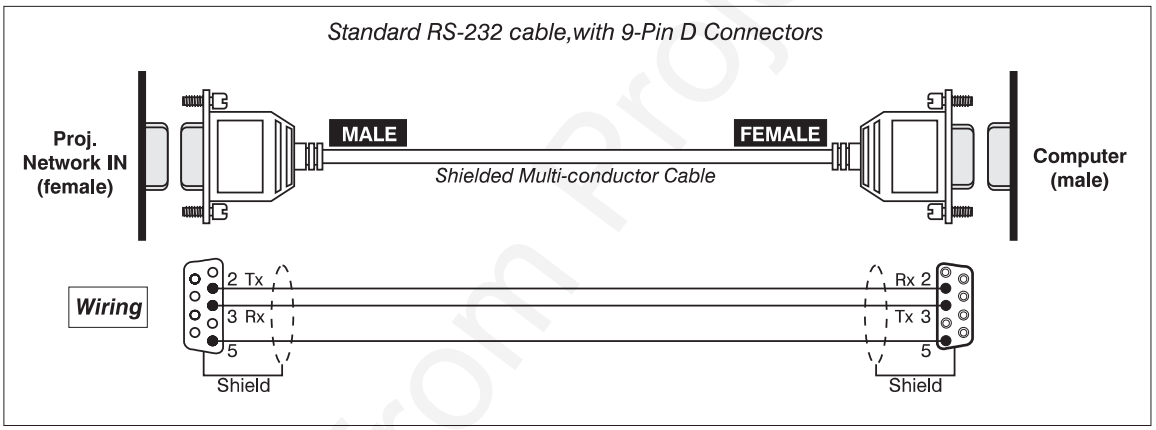

❑ *From projector to computer*

For computers having a 25-pin serial port

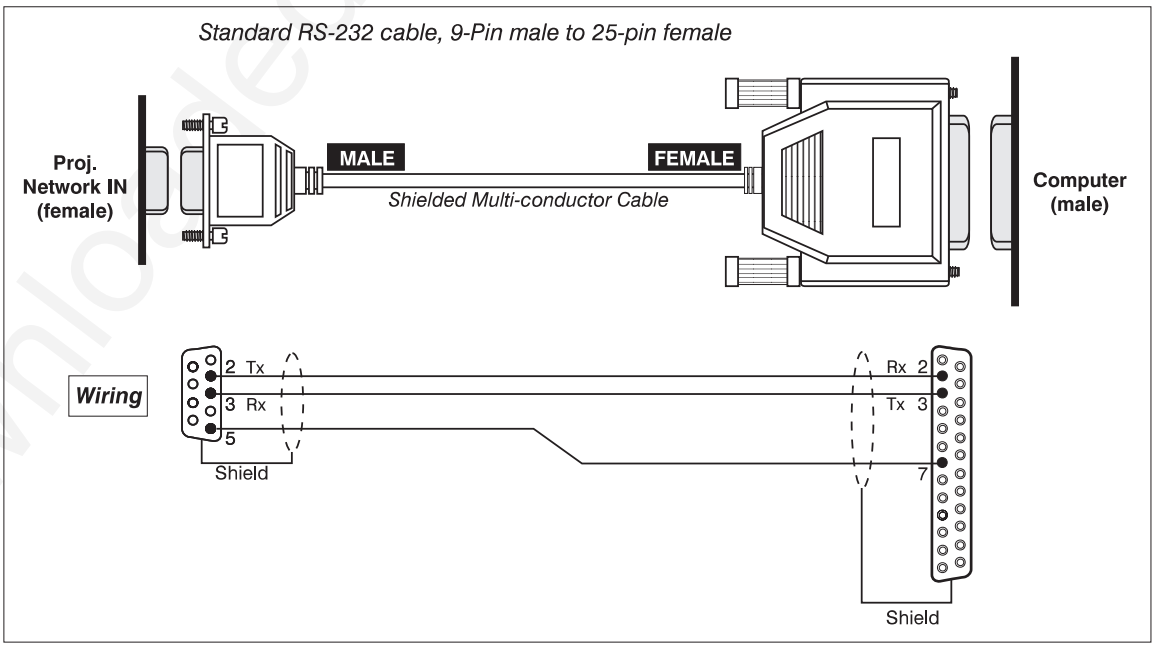

Downloaded from Projector.com

❑ *From projector to projector*

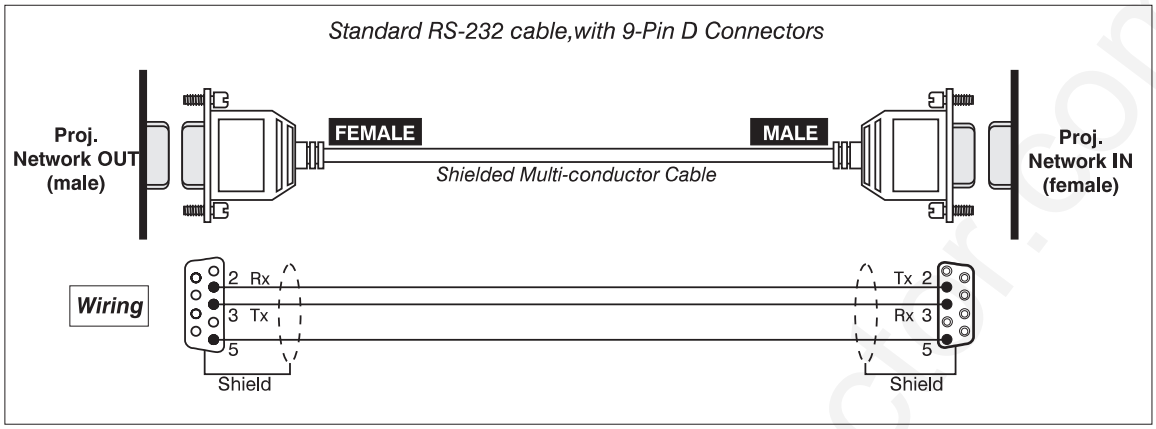

❑ *From projector to switcher, new installation*

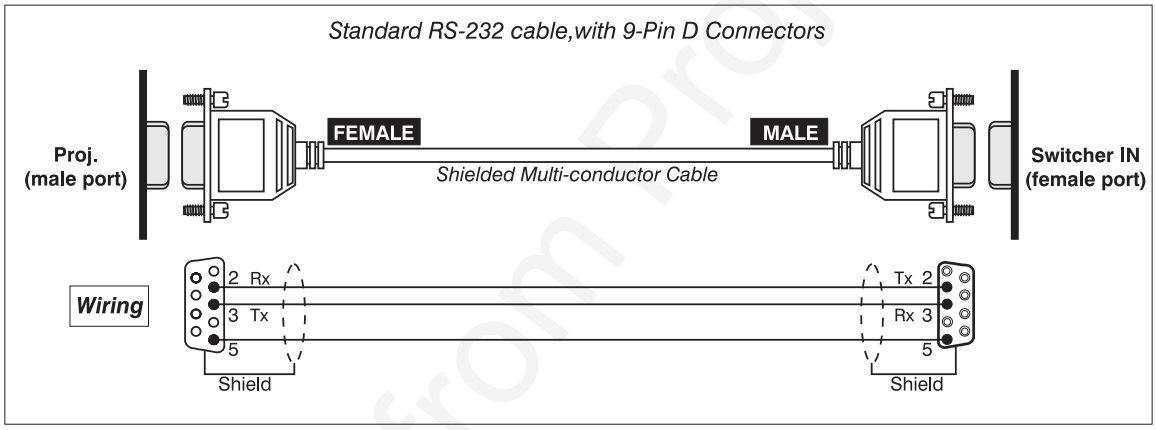

❑ *From projector to switcher, in existing Marquee installation*

For adding a VistaPro or VistaGRAPHX projector to an existing installation in which the switcher OUT port is used (such as with Marquee projectors), add a gender-changing adapter at the projector port as shown:

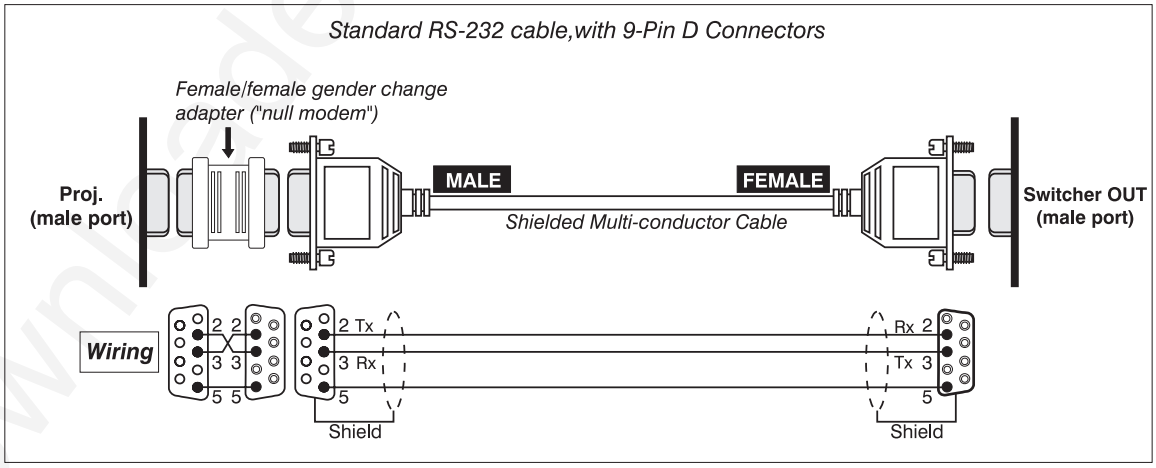

Downloaded from Projector.com

When connecting *VistaGRAPHX 10K* to a computer that has an RS-422 serial interface, refer to the following wiring information.

WARNING

Never use the RS-422 port unless you are using a computer with RS-422 capability. The higher voltage level of this signal could damage incompatible equipment.

❑ ***From projector to RS-422 compatible computer***

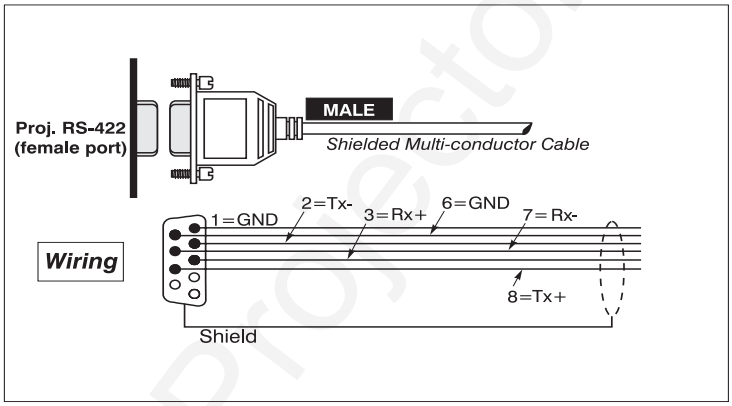

Downloaded from Projector.com

Downloaded from Projector.com

Appendix E

Throw Distance

Always consult this Appendix when planning a projector installation. See *2.3, Projector Position and Mounting* for additional information.

Calculating Throw Distance

The correct throw distance for an installation depends on the screen size and projector lens type present — the larger the image, the greater the distance you must allow between the projector and screen. Once you know the screen size and lens type present, you can calculate the throw distance required in an installation by using the appropriate formula as found in this appendix.

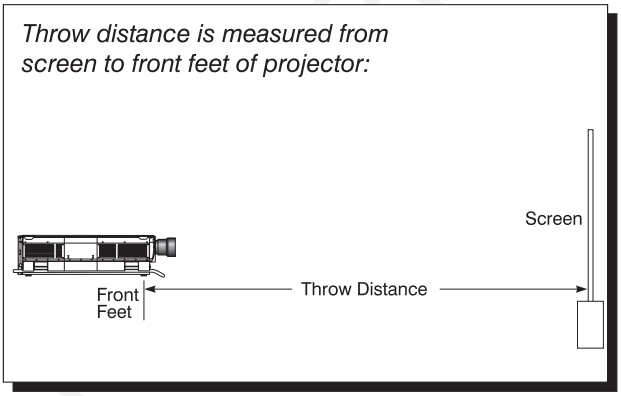

Note that throw distance is measured perpendicular to the projector front feet and the screen but not necessarily parallel to the floor — i.e., the projector and screen may both be inclined.

Pre-calculated throw distances for the complete range of lens types and screen sizes appear in the charts and graphs on the following pages. Refer to these examples to quickly determine the proper throw distance for your installation.

NOTE: The variable operating ranges for zoom lenses appear in graphs only. Formulae and charts do not apply.

Downloaded from Projector.com

0.8:1 Fixed Focal Lens

0.8:1 Formula

TD = (0.794 x W') + 0.60

(W' = ↔ *horizontal screen width in feet)*

↔ Screen Width [ft]	Throw Distance [ft]
4	3.77
4.5	4.17
5	4.57
5.5	4.97
6	5.36
6.5	5.76
7	6.16
7.5	6.56
8	6.95
8.5	7.35
9	7.75
9.5	8.14
10	8.54
10.5	8.94
11	9.34
11.5	9.73
12	10.13
12.5	10.53
13	10.93
13.5	11.32
14	11.72
14.5	12.12
15	12.51
15.5	12.91
16	13.31
16.5	13.71
17	14.10
17.5	14.50
18	14.90
18.5	15.30
19	15.69
19.5	16.09
20	16.49

Diagonal size ↗ = 5-25 feet

Image size range can be exceeded with some focus degradation

Downloaded from Projector.com

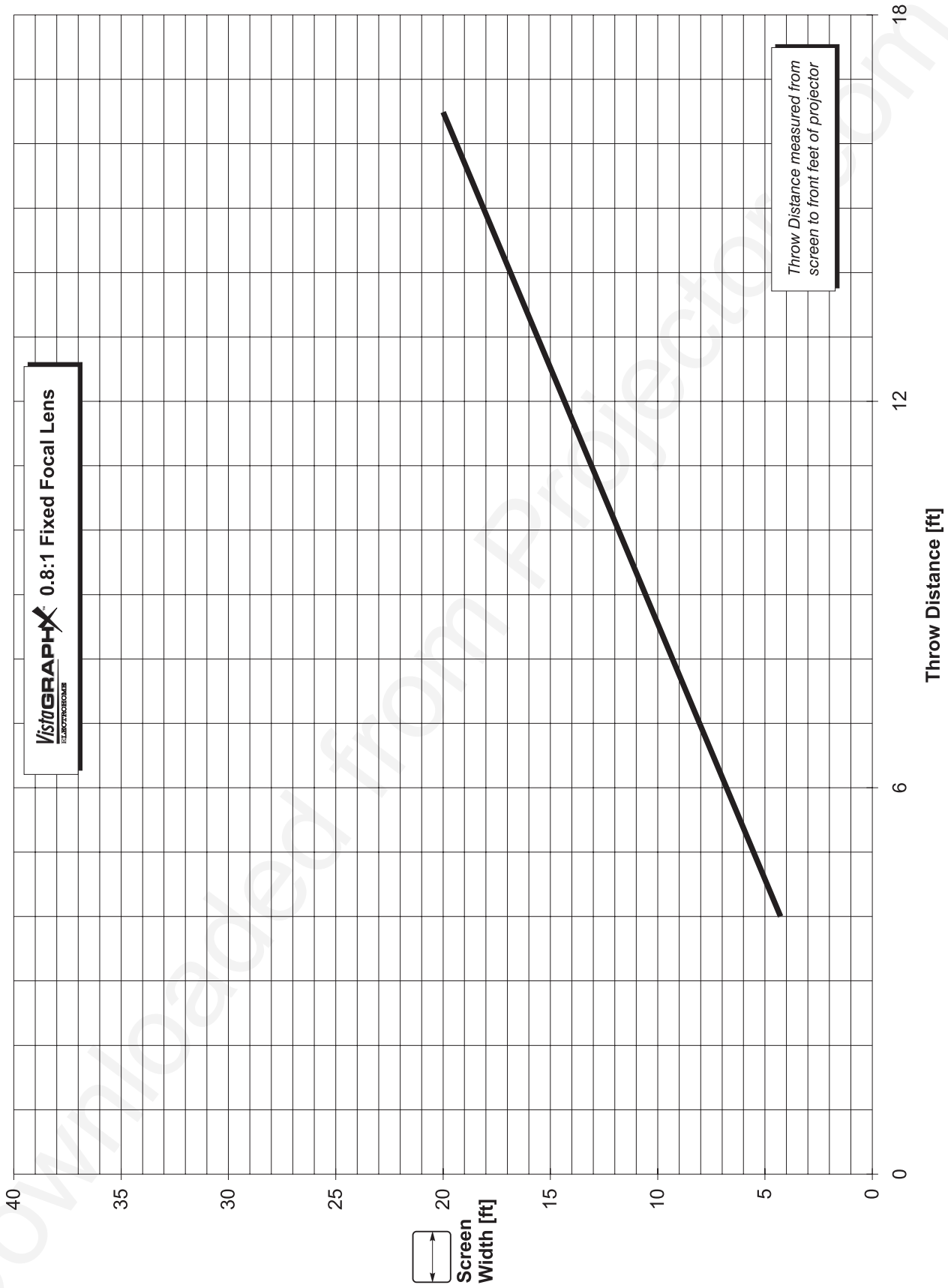

Downloaded from Projector.com

1:1 Fixed Focal Lens

(VistaPro 1.2:1)

1:1 Formula

TD = (1.01 x W') + 0.26

(W' = ↔ *horizontal screen width in feet)*

↔ Screen Width [ft]	Throw Distance [ft]
5	5.32
5.5	5.83
6	6.34
6.5	6.84
7	7.35
7.5	7.86
8	8.36
8.5	8.87
9	9.38
9.5	9.88
10	10.39
10.5	10.90
11	11.40
11.5	11.91
12	12.42
12.5	12.92
13	13.43
13.5	13.94
14	14.44
14.5	14.95
15	15.46
15.5	15.96
16	16.47
16.5	16.98
17	17.48
17.5	17.99
18	18.50
18.5	19.00
19	19.51
19.5	20.02
20	20.52
20.5	21.03
21	21.54
21.5	22.04
22	22.55
22.5	23.06
23	23.56
23.5	24.07
24	24.58

Diagonal size ↗ = 6-30 feet

Image size range can be exceeded with some focus degradation

2.3:1 Fixed Focal Lens

(VistaPro 3:1)

2.3:1 Formula

TD = (2.35 x W') + 0.26

(W' = ↔ *horizontal screen width in feet)*

↔ Screen Width [ft]	Throw Distance [ft]
5	12.02
5.5	13.19
6	14.37
6.5	15.55
7	16.72
7.5	17.90
8	19.07
8.5	20.25
9	21.43
9.5	22.60
10	23.78
10.5	24.95
11	26.13
11.5	27.31
12	28.48
12.5	29.66
13	30.83
13.5	32.01
14	33.19
14.5	34.36
15	35.54
15.5	36.71
16	37.89
16.5	39.07
17	40.24
17.5	41.42
18	42.59
18.5	43.77
19	44.95
19.5	46.12
20	47.30
20.5	48.47
21	49.65
21.5	50.83
22	52.00
22.5	53.18
23	54.35
23.5	55.53
24	56.71

Diagonal size ↗ = 6-30 feet

Image size range can be exceeded with some focus degradation

Downloaded from Projector.com

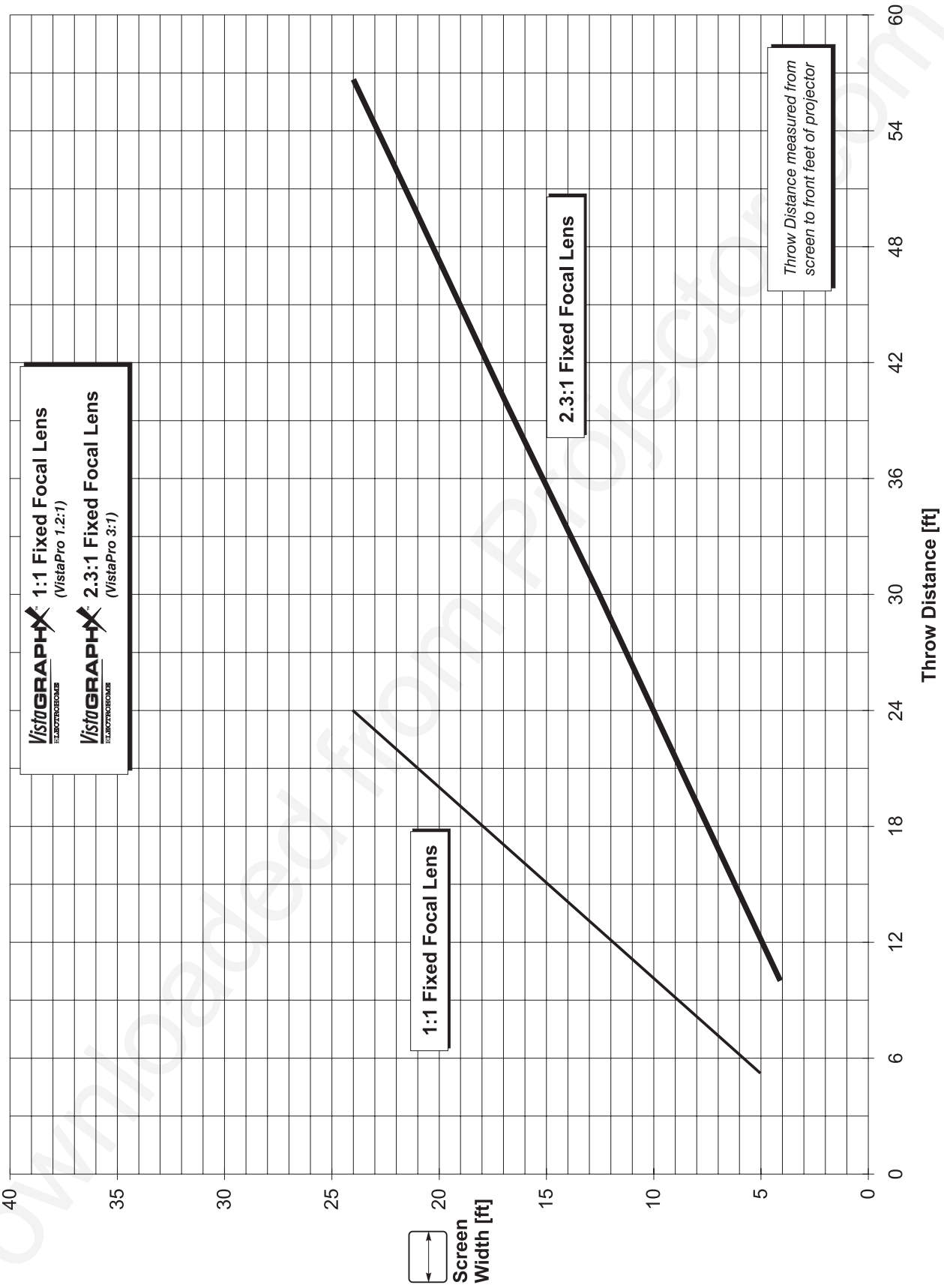

Downloaded from Projector.com

3.9:1 Fixed Focal Lens

(VistaPro 5:1)

3.9:1 Formula

TD = (3.97 x W') - 0.45

(W' = ↔ *horizontal screen width in feet)*

Screen Width [ft]	Throw Distance [ft]
7.5	29.32
8	31.30
8.5	33.29
9	35.27
9.5	37.26
10	39.24
10.5	41.23
11	43.21
11.5	45.20
12	47.18
12.5	49.17
13	51.15
13.5	53.14
14	55.12
14.5	57.11
15	59.09
15.5	61.08
16	63.06
16.5	65.05
17	67.03
17.5	69.02
18	71.00
18.5	72.98
19	74.97
19.5	76.95
20	78.94
20.5	80.92
21	82.91
21.5	84.89
22	86.88
22.5	88.86
23	90.85
23.5	92.83
24	94.82
24.5	96.80
25	98.79
25.5	100.77
26	102.76
26.5	104.74
27	106.73
27.5	108.71
28	110.70
28.5	112.68
29	114.67

Diagonal size ↗ = 9.6-36 feet

Image size range can be exceeded with some focus degradation

5.5:1 Fixed Focal Lens

(VistaPro 7:1)

5.5:1 Formula

TD = (5.50 x W') + 0.22

(W' = ↔ *horizontal screen width in feet)*

Screen Width [ft]	Throw Distance [ft]
7.5	41.77
8	44.54
8.5	47.31
9	50.08
9.5	52.85
10	55.62
10.5	58.39
11	61.16
11.5	63.93
12	66.70
12.5	69.47
13	72.24
13.5	75.01
14	77.78
14.5	80.55
15	83.32
15.5	86.09
16	88.86
16.5	91.63
17	94.40
17.5	97.17
18	99.94
18.5	102.71
19	105.48
19.5	108.25
20	111.02
20.5	113.79
21	116.56
21.5	119.33
22	122.10
22.5	124.87
23	127.64
23.5	130.41
24	133.18
24.5	135.95
25	138.72
25.5	141.49
26	144.26
26.5	147.03
27	149.80
27.5	152.57
28	155.34
28.5	158.11
29	160.88

Diagonal size ↗ = 9.6-36 feet

Image size range can be exceeded with some focus degradation

Downloaded from Projector.com

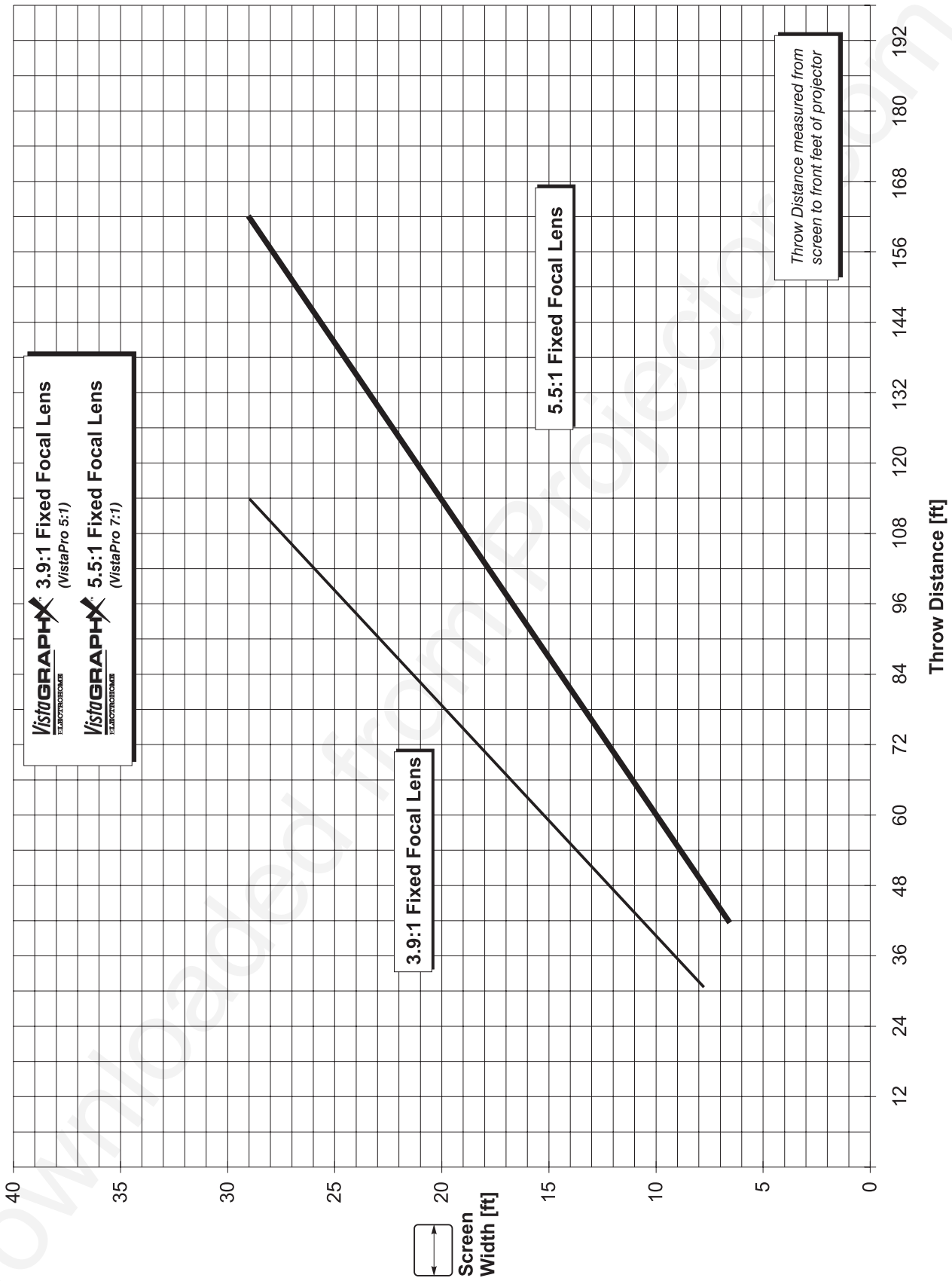

Downloaded from Projector.com

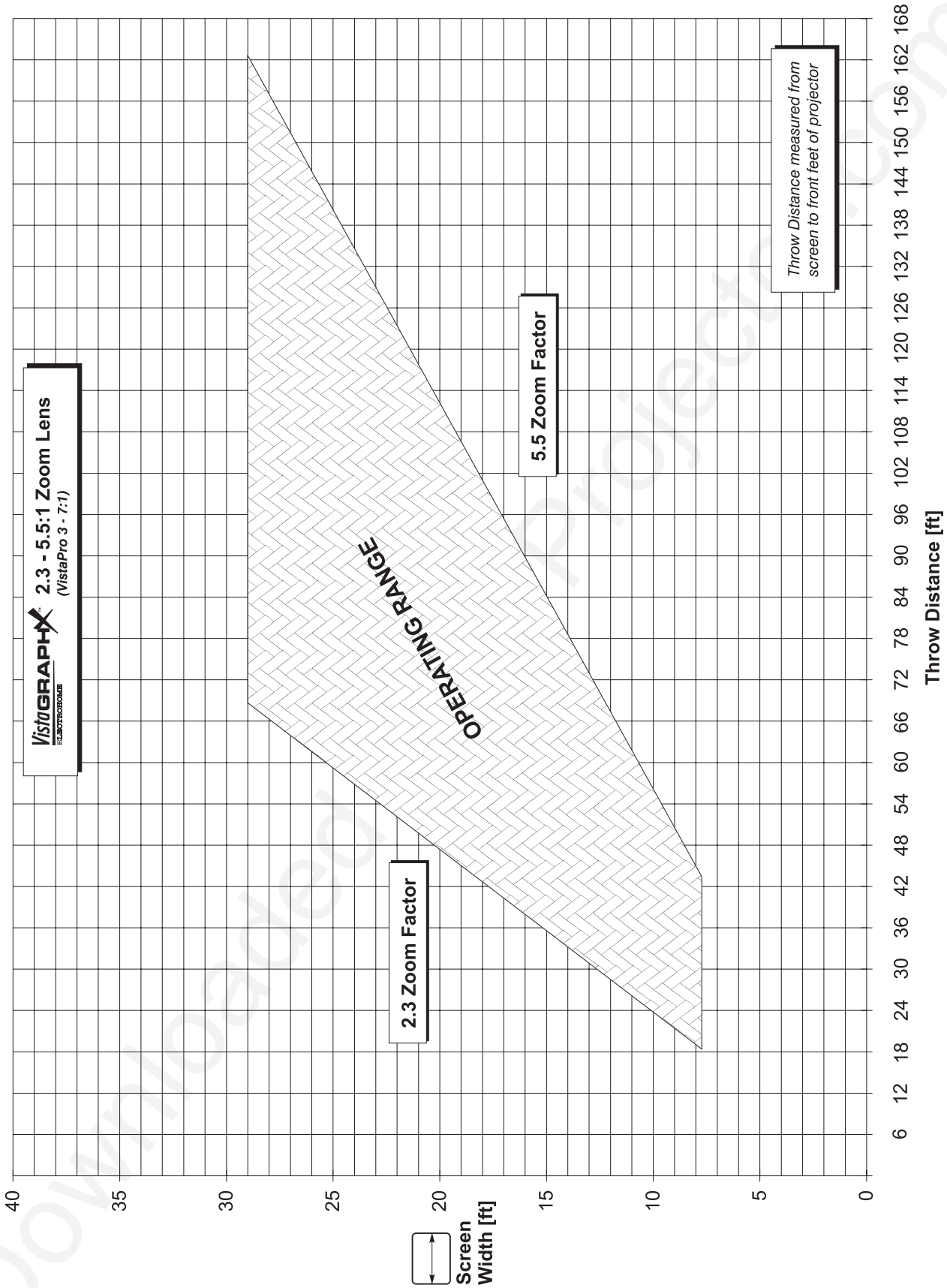

Downloaded from Projectorscreen.com

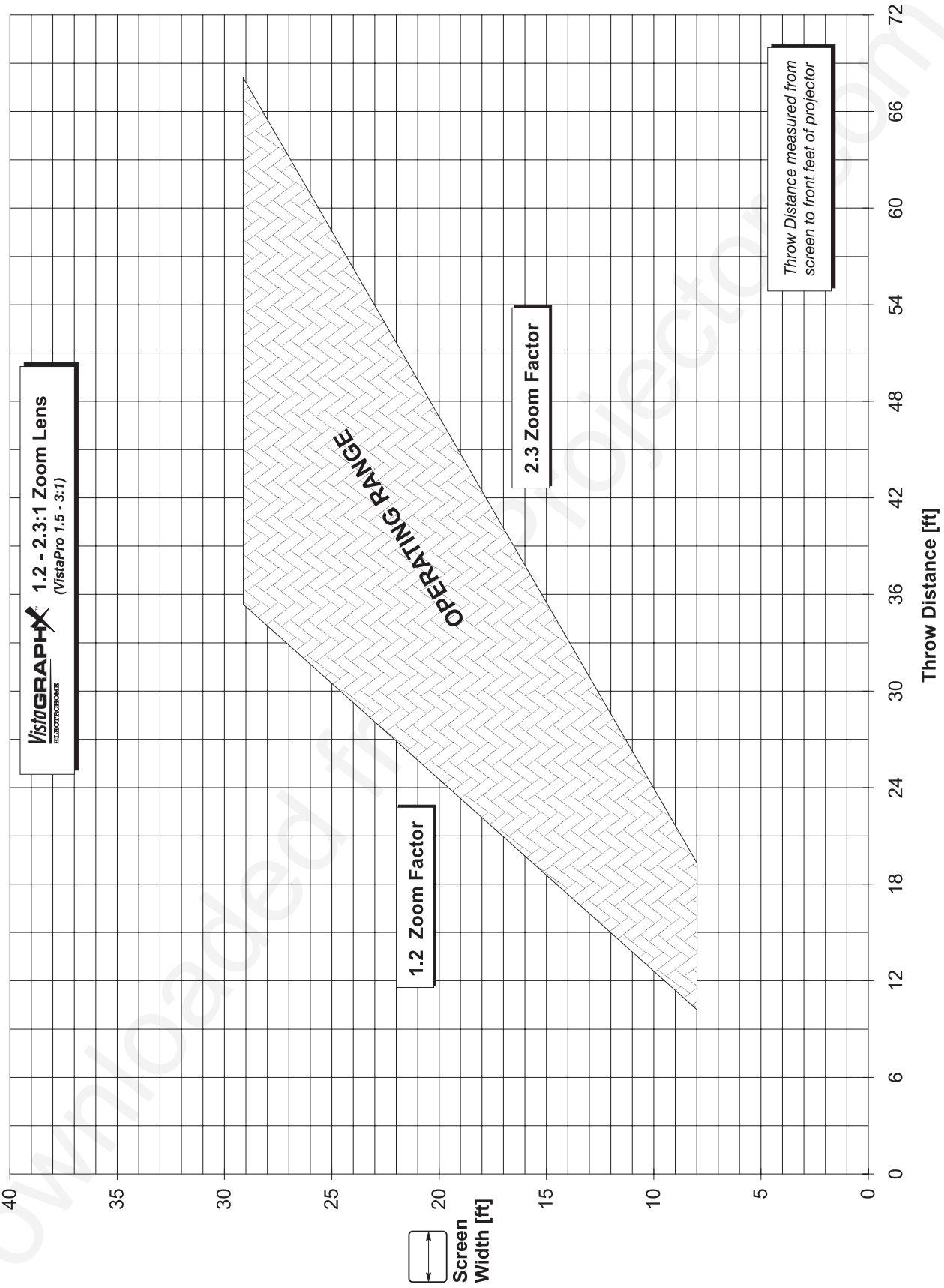

Downloaded from Projector.com

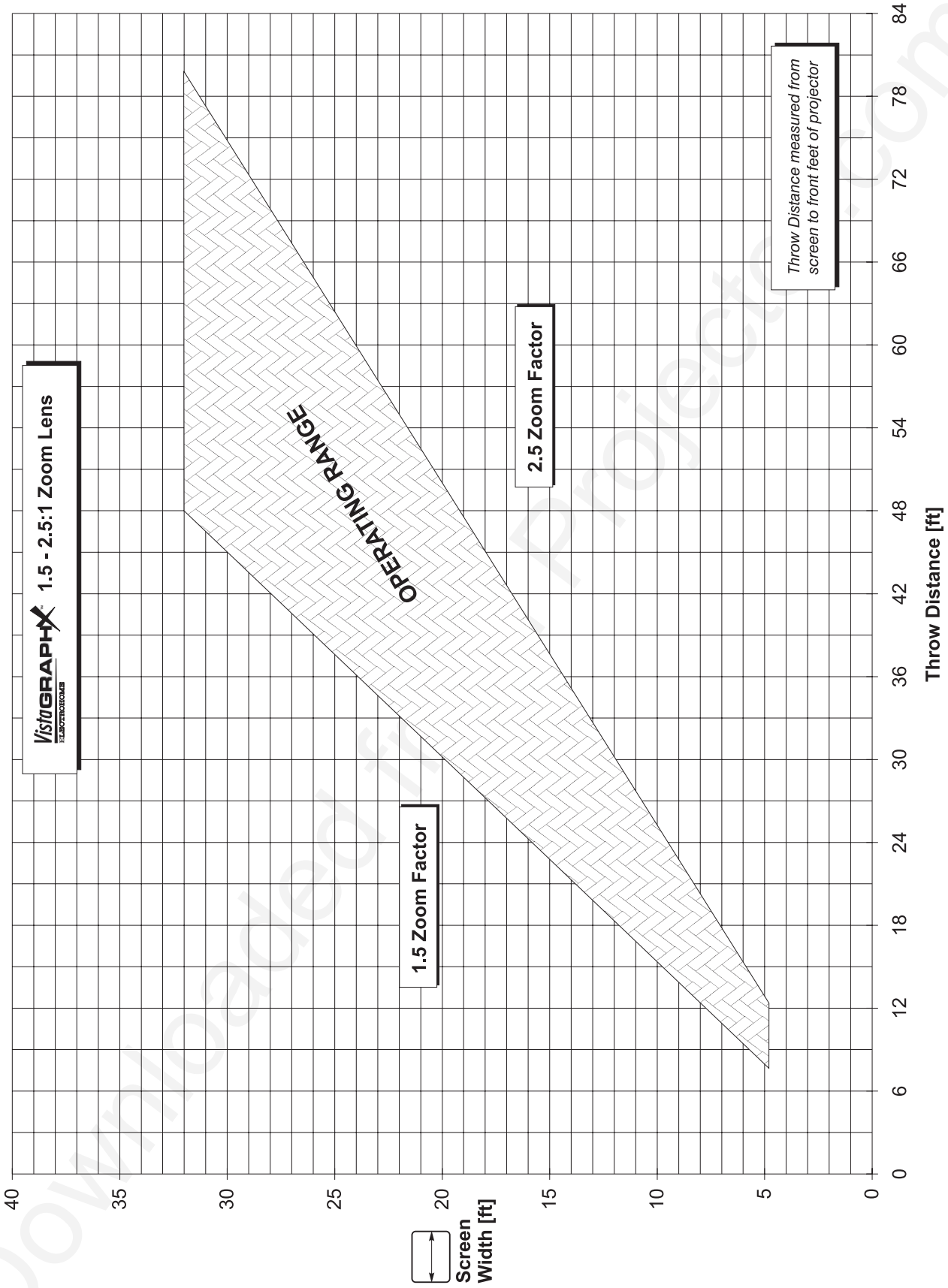

Downloaded from Projectorscom

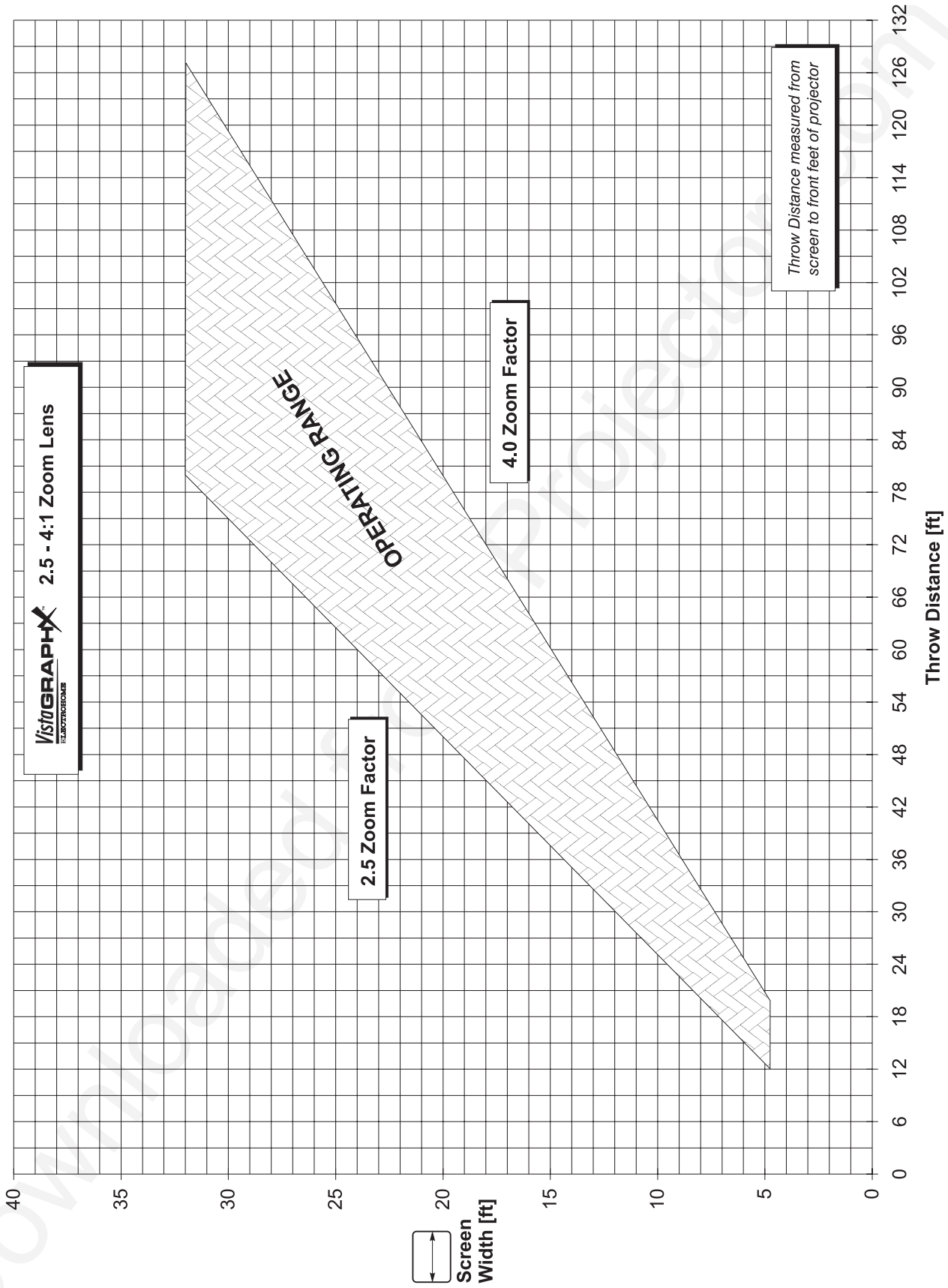

Downloaded from Projectorscom

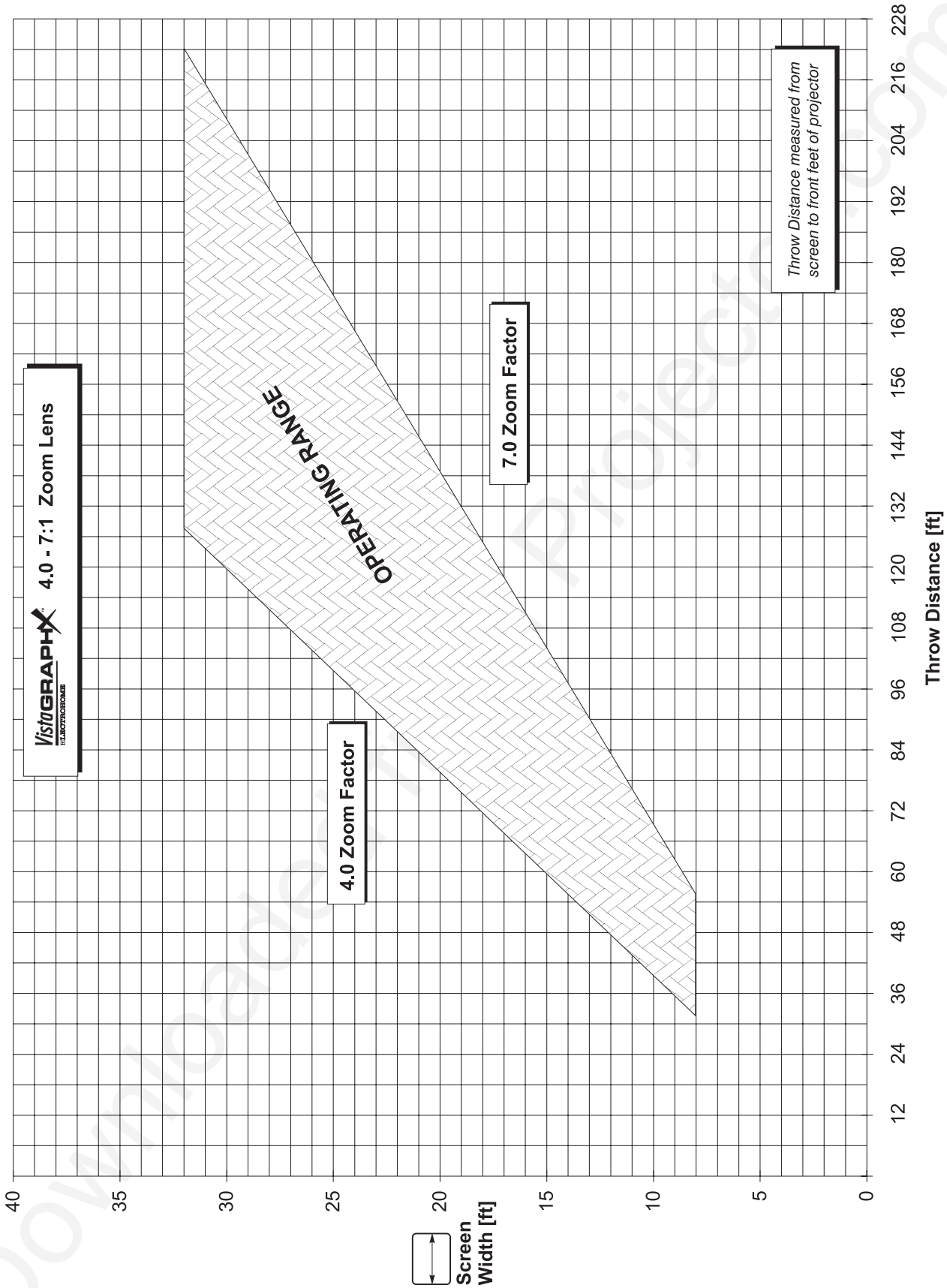

Downloaded from Projecto.com

Appendix F

Optional Input Modules

There are many optional input modules and accessories available for the *VistaGRAPHX 10K*. Contact your dealer for a complete and up-to-date listing.

Marquee Signal Switcher 38-801050-xx

➤ The *Marquee* Signal Switcher is a rack-mountable signal selector which can extend the number of selectable inputs by the *VistaGRAPHX 10K*. Connected to the projector RGB interface (INPUT 1), each switcher adds 8 more sources to the system. Other switchers can be connected to the first, with each input selectable through a keypad. Switcher inputs can also be selected by pressing the appropriate front panel push-button.

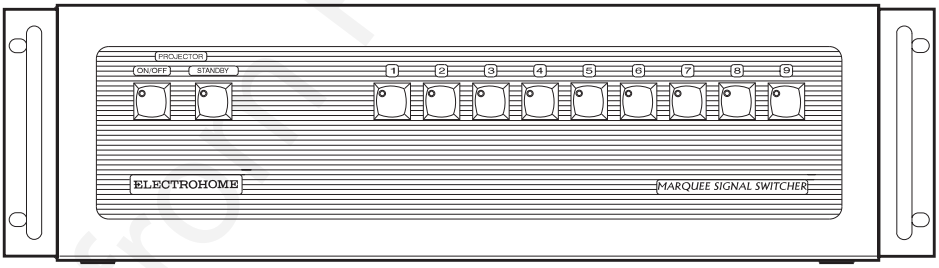

Features

- ◊ can be used with *VistaGRAPHX 10K* and other projectors
- ◊ simple push-button control
- ◊ easy to see, illuminated indicators
- ◊ 9 expansion slots for interface modules
- ◊ RS-232 serial interface
- ◊ input for a wired remote keypad
- ◊ universal power input
- ◊ up to 9 switchers can be ganged together for use with the *VistaGRAPHX 10K*

RGB500 Input Module 38-801001-xx

➤ The RGB Input Module may be installed in a *VistaGRAPHX 10K* projector, a *Marquee* signal switcher, or a *Marquee* Case/Power Supply. The module receives analog RGB input signals from computers or other RGB source devices.

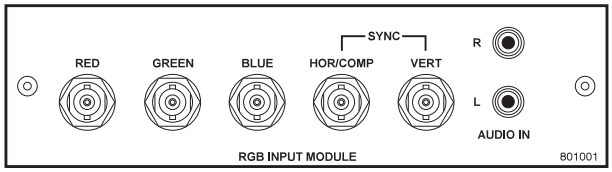

Downloaded from Projector.com

Features

- ◊ accepts 3, 4, or 5 wire RGB video (sync-on-green, composite sync, or separate horizontal and vertical sync), up to 500 MHz bandwidth
- ◊ BNC connectors for RGB signal inputs
- ◊ RCA connectors for left and right channel audio inputs

RGB400BA Input Module 38-801033-xx

➤ The RGB400 Buffered Amplifier Input Module may be installed in a Marquee signal switcher or Marquee Case/Power Supply. Connect three-, four-, or five-wire RGB video signals of up to 400 MHz bandwidth, signals typically produced by high-resolution computer or workstations. The buffering capability of the module enables the incoming signal to be sent to a remote destination. Inputs are 75Ω terminated.

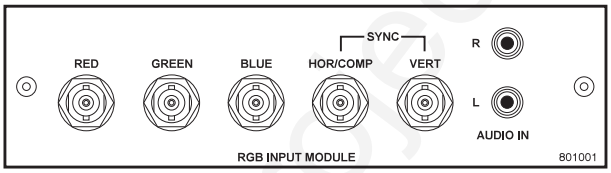

- ◊ accepts 3, 4, or 5 wire RGB video (sync-on-green, composite sync, or separate horizontal and vertical sync)
- ◊ BNC connectors for RGB signal inputs
- ◊ Buffered signals to a remote destination
- ◊ RCA connectors for left and right channel audio inputs

RGB400 Active Loop-Thru Input Module 38-801002-xx

➤ The RGB400 ALT Input Module may be installed in a *VistaGRAPHX 10K* projector, *Marquee* signal switcher, or *Marquee* Case/Power Supply. The module receives analog RGB input signals from computers or other RGB source devices. Video inputs are 75Ω terminated. Video outputs are provided for buffered loop-through to another display device.

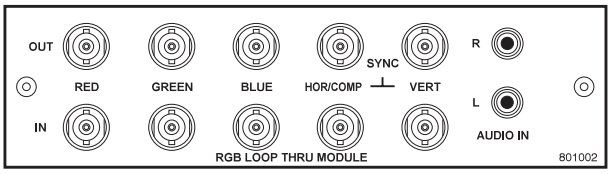

Features

- ◊ accepts 3, 4, or 5 wire RGB video (sync-on-green, composite sync, or separate horizontal and vertical sync)
- ◊ BNC connectors for RGB signal inputs
- ◊ RCA connectors for left and right channel audio inputs
- ◊ buffered loop-through video outputs

Downloaded from Projector.com

Composite / S-Video Input Module 38-801004-xx

➤ The Composite/S-Video Input Module may be installed in a *VistaGRAPHX 10K* projector, a *Marquee* signal switcher or a *Marquee* Case/Power Supply. The module receives composite video or S-video input signals from tape or disk players. Video inputs are 75Ω terminated. Video outputs are provided for buffered loop-through to another display device.

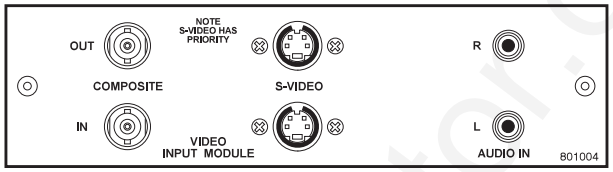

Features

- ◊ BNC connectors for composite RGB signals
- ◊ 4-pin mini-DIN connectors for S-Video signals
- ◊ RCA connectors for left and right channel audio inputs
- ◊ buffered loop-through video outputs

NOTE: This interface is not a decoder. Proper display of NTSC, PAL, OR SECAM signals requires that the ***VistaGRAPHX 10K*** *includes a multi-standard decoder.*

HDTV Input Module 38-801005-xx

➤ The HDTV Input Module may be installed in a *VistaGRAPHX 10K* projector, *Marquee* signal switcher, or *Marquee* Case/Power Supply. The module receives HDTV analog RGB input signals with tri-level sync, or YPrPb signals.

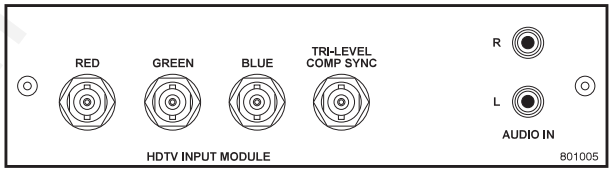

Features

- ◊ accepts RGB video with tri-level composite sync, or YPrPb signals
- ◊ BNC connectors for RGB signal inputs
- ◊ RCA connectors for left and right channel audio inputs

Downloaded from Projector.com

PC Analog Input Module 38-801006-xx ➤

Vista Digital Interface 38-804012-xx ➤

L

R

Features

- ◊ accepts serial digital 4:2:2 component video
- ◊ one BNC connector
- ◊ RCA connectors for left and right channel audio inputs
- ◊ status LEDs for signal and error

Downloaded from Projector.com

Marquee Case/Power Supply 38-801023-xx 38-801026-xx

➤ The *Marquee* Case/Power Supply enables you to use an input module as a stand-alone interface. Two supplies are available: one for use with 120 volt line voltage (38-801023-XX), and the other for use with 220 volt line voltage (38-801026-XX). Both models include a 15 Vdc, 500 mA AC adapter.

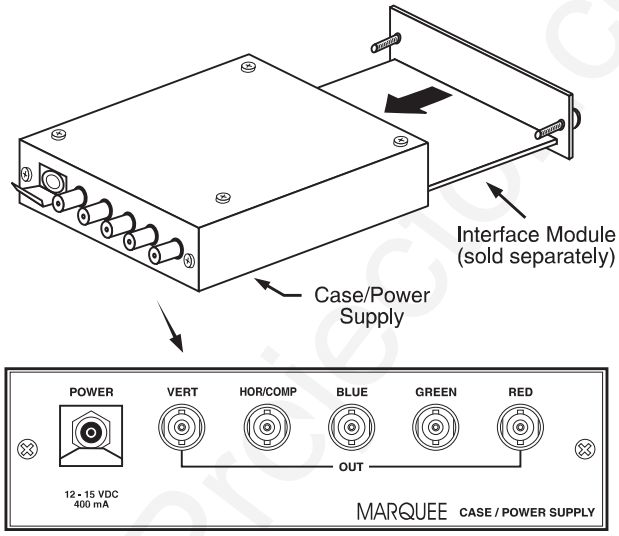

Features

- ◊ easy installation — no tools required
- ◊ can be used with the following *VistaGRAPHX 10K* input modules: RGB Input, RGB Loop-Thru, Composite/S-Video, HDTV, and PC Analog
- ◊ retaining clip to secure AC adapter
- ◊ non-slip feet
- ◊ supplied with 110 or 220 volt AC adapter

Downloaded from Projecto.com

Downloaded from Projector.com

Index

A

AC
- Circuit Breaker, 3-4
- Requirements, 2-1, 5-3
- Wiring, 5-3

Anamorphic, 3-27
Arrow Keys, 3-9
Aspect Ratio, 2-6
Audio Connection, 2-14
Auto Lens, 3-36
AutoSource Checkbox, 3-19

B

Back IR Keypad, 3-33
Batteries, 4-3
Baud Rate, 2-18, 2-20, 3-33
Blacklevel Adjustment, 3-30
Brightness, 1-1, 3-29, 5-1
Brightness Key, 3-10, 3-29
Broadcasting, 3-10, 3-34, 3-39

C

Channel
- Name, 3-20
- Number, 3-18, 3-19

Channel Key, 3-8, 3-18
Channel Selection, 3-35
Channels
- Copying, 3-20
- Creating automatically, 3-18
- Creating in Channel List Menu, 3-18
- Definition of, 3-18
- Deleting, 3-20
- Editing, 3-20
- Maximum Number, 3-17
- Selecting/Switching, 3-17
- Updating, 3-21

Checkboxes, Using, 3-15
Color, 3-29
Color Key, 3-9, 3-29
Color Temperature, 3-29, 5-1
- Adjusting, 3-30
- Custom, 3-30
- Interpolated, 3-30
- Resetting to Default, 3-30

Communication Cables, 2-17
Contrast, 3-28
Contrast Key, 3-10, 3-28
Contrast Ratio, 5-1
Custom preset, 3-26

D

Detail, 3-29
Detail Key, 3-9
Digital Micromirror Device, 1-2
Display
- Failure, 4-12

Display Adjustments
- Manual, 2-17, 3-3

Display Problems
- Faintness, 4-13
- Inaccurate colors, 4-15
- Incomplete Image, 4-14
- Instability, 4-13, 4-14
- Keystoned image, 4-15
- Noise in image, 4-15
- Out-of-focus, 4-15
- Proportion, 4-14
- Wrong Orientation, 4-14

Drive Adjustment, 3-30

E

Enter Key, 3-8
Error Conditions, 3-40
Error Messages, 3-40
- Displaying, 3-36

Exit Key, 3-8
Eye bolts, 3-5
Eye Bolts, 2-3

F

Fans
- Lamp Cooling, 2-16

Filter
- Replacement Procedure, 4-7
- Warning, 4-2

Focus, 2-2, 2-5, 2-17, 3-2
Folded Optics, 2-12
Formats
- Video, 1-1, 5-2

Front IR Keypad, 3-33

Downloaded from Projector.com

Function Key, 3-11

H

HDTV, 3-32
Help
  Context-sensitive, 3-13
  From presentation level, 3-14
  Help Key, 3-12
Hoisting the projector, 2-3
Horizontal Capture, 3-25
Horizontal Display, 3-24
Horizontal Margin, 3-24
Horizontal Position, 3-22

I

Image Orientation, 2-16, 3-35
InMenu Checkbox, 3-19
Input
  Connection, 2-1, 2-12
  Definition of, 3-17
  Selection, 2-1
Input 1, 2-13, 3-7
  Connection, 2-14
  Extra Video Sources, 2-15
Input 2, 2-15, 3-7
Input 3, 3-7
Input 4, 2-14, 3-8
Input Key, 3-8
Installation
  Front Screen, 2-4
  Rear Screen, 2-5, 2-12
  Room Lighting, 2-6
  Types, 2-4
Intelligent Lens System, 1-1, 2-2, 2-17, 3-36
Interfaces
  Optional, 2-16
IR Sensors, 3-4, 3-33

K

Keypad
  Types, 3-5
Keypad Protocol, 2-21, 3-12, 3-34, 4-12
  Changing, 2-21
  Conflicts, 2-23
  Default, 2-21, 3-12
  Hard-wired, 2-22
Keypad, Built-in
  Description and Use, 3-6
Keypad, IR Remote, 4-3
  Description and Use, 3-6
  Failure, 4-13
  Specifications, 5-3
Keypad, Wired, 3-34
Keystone, 2-9

L

Lamp
  Cleaning, 4-3
  Failure, 4-13
  Hours of Use, 4-4
  Recording serial number, 3-37
  Recycling, 4-6
  Replacement Procedure, 4-4
  Resetting timer, 3-38
  Specifications, 5-3
  Timer Message, 3-36
Lamp Power
  Adjusting, 3-35
Lamp Replacement
  Warning, 4-2
Lamp Timer
  Resetting, 4-8
Language, 3-35
LCD Display, 3-4
LED, AC, 3-4
LEDs, Status, 3-4, 3-40
Lens
  Cleaning, 4-3
  Focus and Zoom, 2-2
  Menu, 2-2
  Recalling Settings, 3-36
  Replacement Procedure, 4-9
  Tilt, 3-3, 4-12
  Types available, 5-1
  VistaPro Equivalents, 2-9, 5-1
Lens Key, 3-10, 3-28
Leveling, 2-1, 2-12, 2-17, 4-15
Locked Channels, 3-19

M

Menu Key, 3-8
Menu System, Navigation, 3-12, 3-21
Menu, Channel List, 3-19
Menu, Communications, 3-33
Menu, Image Settings, 3-28
Menu, Lens, 3-28
Menu, Main, 3-13
Menu, Preferences, 3-35
Menu, Service, 3-38
Menu, Size / Position, 3-22
Menu, Status, 3-36
Mounting, 2-11
Multiple Projectors, 2-17, 2-21, 3-39
  Connecting, 2-19
Mute Key, 3-11

N

Numerical Entry, 3-17

O

Odd/Even, 3-32
Offset. *See Vertical Offset*
OSD Key (On-Screen Display), 3-11

P

Pixel Key, 3-10, 3-22

Downloaded from Projector.com

Pixel Phase, 3-23
Pixel Tracking, 3-23, 4-14, 4-15
Position Key, 3-10
Power
  Connection, 2-1, 2-16
  Problems, 4-12
  Requirements, 5-3
  Warning, 2-1, 4-2
Power Key, 3-7
Presentation Level
  Definition, 3-7
Presets, 3-26
  Anamorphic, 3-27
  Custom, 3-26
  Default, 3-26
  Full Screen, 3-27
  No Resizing, 3-26
Projector
  Accessories, 5-4
  Angles of Operation, 2-12
  Cleaning/Maintenance, 4-3
  Components, 1-2, 3-2, 5-4
  Construction, 1-2
  Controlling with IR Remote, 3-10
  Dimensions, 5-3
  Features, 1-1
  Function, 1-2
  Hoisting, 2-3, 3-5
  Installation, 2-1
  Leveling, 2-17
  Networks, 2-19
  Number, 2-21, 3-17, 3-34, 3-39
  Position and Mounting, 2-8, 2-16
  Quick Setup, 2-1
  Resetting, 3-5, 3-41
  Service, 1-2, 4-3
  Transport by hand, 2-2
  Ventilation, 2-7, 4-2
  Voltage, 2-16
  Warm-up, 2-1
Pull-down lists, 3-15

R

Reset, Hard, 3-41
Resizing, 3-23
  How to Access, 3-24
  Typical Procedure, 3-25
  When to Use, 3-23
resolution, 3-32
Resolution, 1-1, 5-1
RGB
  Connection, 2-13, 3-3
  Frequencies, 5-2
RS-232, 1-1, 2-18, 2-19, 2-20, 2-21, 3-33, 3-39, 5-2
  Communication Cables, 3-33
  Software commands, 3-39
RS-422, 1-1, 2-18, 5-2

S

Screen size, 2-7, 2-8
Screen Size, 4-15
Screen Type, 2-4
Serial Communication, 2-17
Service, 1-2
Service Requirements, 4-3
Shutter, 3-3
Shutter Key, 3-11
Signal Type Checkbox, 3-32
Slidebars
  "Direct", 3-15, 3-21
  Hidden, 3-36
  Using, 3-14
Slot, 3-19
Source
  Connection, 2-1, 2-12
  Selection, 2-1
  Specifying a Location, 3-8
Source Setup. *See Channel*
Specifications, 5-1
Standby Key, 3-8
Switcher, 2-19, 3-19, 3-33
Sync
  Def. and types, 5
Sync Tip Clamping, 3-32

T

Test Key, 3-12
Test Patterns, 3-38
Text
  Editing, 3-16
Throw distance, 2-1, 2-8, 2-9
Throw Distance, 4-12, 4-15
Time-outs, 3-14
Tint, 3-29
Tint Key, 3-9, 3-29
Toggle Keys, 3-9
Two-Way Controller, 2-19, 3-5

V

VCR Checkbox, 3-32
Vertical Capture, 3-25
Vertical Display, 3-25
Vertical Margin, 3-24
Vertical Offset, 2-11, 4-12
  How to Adjust, 3-3
Vertical Position, 3-22
Video, 3-3
  Formats, 5-2
Video Decoder Module, 1-2
Video Standard Checkbox, 3-31
Video Termination, 3-36
Volume Key, 3-10

W

Warnings, 4-1
Warranty, 1-2, 4-9
Wired Keypad, 3-34
Wiring, Power Cord, 5-3

Downloaded from Projector.com

X

XLR
Connectors, 3-5

Y

YPrPb HDTV, 3-32
YUV (component video), 2-13

Z

Zoom, 2-2, 2-17, 3-2
Installing a zoom lens, 4-9
Screen size, 2-6

Downloaded from Projector.com