myprojectorlamps.com

The most trusted, dependable name in projector lamp sales.

http://www.myprojectorlamps.com

http://www.myprojectorlamps.ca

http://www.myprojectorlamps.eu

The following projector manual has not been modified or altered in any way.

Roadster/Mirage S+ User's Manual

Table of Contents

		Section	Contents	Page
1	Introduction	1.1	The Projectors	1-1
		1.2	Components	1-2
		1.3	Purchase Record and Warranty Registration	1-3
2	Installation & Setup	2.1	Quick Setup	2-1
		2.2	Installation Considerations	2-3
		2.3	Projector Position and Mounting	2-15
		2.4	Source Connections	2-18
		2.5	Connecting Communications	2-21
		2.6	Connecting Multiple Projectors	2-24
		2.7	Power Connection	2-27
		2.8	Operating Orientation	2-28
		2.9	Leveling	2-28
		2.10	Zoom, Focus, and Lens Offset	2-29
		2.11	Keypad Protocols and Conversion	2-29
3	Basic Operation	3.1	Overview	3-1
		3.2	Projector Basics	3-1
		3.3	Using the Keypads	3-4
		3.4	Navigating the Menus	3-12
		3.5	Using Inputs and Channels	3-16
		3.6	Adjusting the Image	3-21
		3.7	Adjusting System Parameters and Advanced Controls	3-37
		3.8	Working with PIP or Seamless Switching	3-51
		3.9	Working with the Lamp	3-54
		3.10	Status Menu	3-58
		3.11	Using Multiple Projectors	3-58
		3.12	Remote Control of the Projector	3-70
		3.13	Error Conditions	3-71
4	Maintenance	4.1	Warnings and Guidelines	4-1
		4.2	Cleaning	4-4
		4.3	Replacing Keypad Batteries	4-5
		4.4	Replacing the Lamp and Filter	4-5
		4.5	Replacing the Lens	4-11
5	Troubleshooting	5.1	Displays	5-1
		5.2	Lamp	5-3
		5.3	Ethernet	5-4
6	Specifications	6.1	Specifications	6-1

continued...

Appendices

A	Glossary	A-1
B	Remote Keypad	B-1
C	Serial Communication Cables	C-1
D	Throw Distance	D-1
E	System Integration	E-1
F	Optional Input Modules	F-1

NOTE: *Due to continuing research, all information in this manual is subject to change without notice.*

Section 1

Introduction

1.1 The Projectors

The *Roadster S*$^+$ and *Mirage S*$^+$*14K* projectors are innovative, high brightness DMD™ projectors that use next generation Digital Light Processing™ (DLP™) technology from Texas Instruments. All models feature compact size, rugged construction, and integral rigging hardware, with the *Roadster Series* ideal for difficult rental/staging installations of multiple projectors, and the *Mirage S*$^+$ *Series* featuring amazing stereo 3D output. A quick-change lamp module, no-tool lens replacement, and intuitive user interface means the ultimate in versatility and ease-of-use. These projectors provide brilliant images with 1400 x 1050 clarity and perfect color saturation in a wide variety of applications.

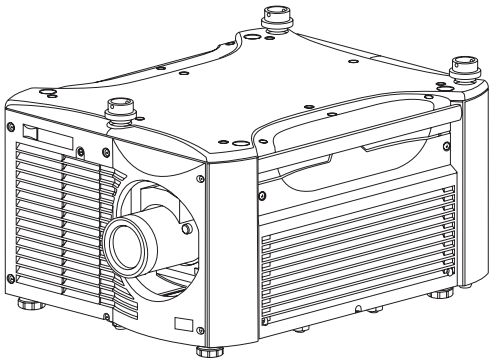

Roadster S$^+$ Series

The *Roadster S*$^+$ *Series* and *Mirage S*$^+$ *Series* each have features for your distinct needs. The stereoscopic *Mirage S*+ projector provides 3D solutions for power walls, simulation, and entertainment venues. *Roadster* models include an additional input module as well as integral hardware for stacking and flying up to 3 projectors.

Main Features ➤ *General*

- *DLP*™ 3-chip electronics with true 1400 x 1050 (SXGA+)
- 10 bit digital video processing
- Single-lens design with field-interchangeable, fast-change lens – no tools needed
- Modular design for easy servicing
- Intelligent Lens System (ILS™) to save and restore lens positions
- Built-in handles and multiple rigging points
- Lenses
  - Choice of lenses (*from 0.73:1 up to 7.3:1*), all zoom lenses motorized

Lamps / Light Output

- Brightness (ANSI lumens)
  - *Roadster S*$^+$*12K* = 12000 (± 10%)
  - *Roadster S*$^+$*16K* or *Mirage S*$^+$ *14K* = 16000 (± 10%)
  - *Roadster S*$^+$*20K* = 20000 (± 10%)
- Contrast Ratio (ANSI lumens)
  - *Roadster S*$^+$*12K/16K* or *Mirage S*$^+$ *14K* = 450-600:1, 1500-1800:1 Full Field
  - *Roadster S*$^+$*20K* = 450:1 ANSI, 1500:1 Full Field
- LiteLOC™ for automatic constant-brightness control

- Quick change bubble-style lamp module

Inputs

- One analog RGBHV/YPbPr input with 5 BNCs
- One DVI-I input for either digital RGB/YCrCb or analog RGB/YPbPr signals
- One analog composite-video input
- One analog S-video input
- Built-in multi-standard video decoder (*NTSC, NTSC 4.43, PAL, PAL-M, PAL-N, PAL-60 AND SECAM*)
- One Dual SD/HD-SDI input (standard in *Roadster Series* only)
- Compatible with all currently used HDTV formats

Special Display Functions

- Auto setup with seamless cut-and-fade source switching
- Electronic brightness uniformity
- Screen-to-screen matching and blending for smooth multiple-projector displays

Communications and Diagnostics

- 2 standard keypads: built-in and remote (for IR or wired control)
- Front and rear IR sensors
- Ethernet, RS232, RS422, and GPIO control ports
- Easy-view LED for error codes and LCD for status and error messages
- Voltmeter for monitoring AC

How The Projectors Work

➤ These projectors accept data/graphics and video input signals for projection on to front or rear flat screens. High brightness light is generated by an internal Bubble lamp, and then modulated by three DMD (digital micromirror device) panels that provide digitized red, green or blue color information. Light from the "on" pixels of each panel is reflected, converged and then projected to the screen through the front lens, where all pixels are superimposed as a sharp full-color image.

1.2 Components

Make sure you have received the following standard components:

- Projector
- Infrared (IR) remote keypad and conversion cable
- Power cord *(**NOTE:** integral on Roadster S+ 20K)*
- *Roadster/Mirage S+ User's Manual*
- *Using 3D in Mirage Manual* *(**NOTE:** for Mirage S+ Series only)*
- 3D Stereo Sync Cable *(**NOTE:** for Mirage S+ Series only*

Differences Between Models

Model Name	Lamp Type	Dual SD/HD-SDI Module	3D	Adjustable Iris	Stacking Mounts	4 Top Eyebolts	Integral Rigging Hardware
Roadster S+ 12K	2.0 kW	✓	*Not Available*	✓	✓	✓	✓
Roadster S+ 16K	2.4 kW	✓	*Not Available*	✓	✓	✓	✓
Roadster S+ 20K	3.0 kW	✓	*Not Available*	*Not Available*	✓	✓	✓
Mirage S+ 14K	2.4 kW	*Optional*	✓	✓	*Optional*	*Optional*	✓

1.3 Purchase Record and Warranty Registration

Whether the projector is under warranty or the warranty has expired, Christie's highly trained and extensive factory and dealer service network is always available to quickly diagnose and correct projector malfunctions. Complete service manuals and updates are available to service technicians for all projectors.

Should you encounter a problem with the projector and require assistance, contact your dealer or Christie. In many cases, any necessary servicing can be performed on site. If you have purchased the projector, fill out the Purchase Record below and keep with your records. In addition, make sure to complete the Product Registration at the Christie website—this will ensure that you receive all future product communications promptly.

Purchase Record

Dealer:	
Dealer Phone Number:	
Projector Serial Number ✽ :	
Purchase Date:	
Installation Date, if applicable:	

✽ ***NOTE:*** *The projector serial number is located on the projector's rear identification label and in the projector's "Status" menu.*

Section 2

Installation & Setup

This section explains how to install and set up the projector. If you are familiar with the projector and want to quickly set it up for temporary use, follow the *Quick Setup* instructions below. For a more complete setup, follow the instructions and guides covered in the remaining subsections.

NOTE: *The lens is not installed for shipping. Refer to* ***4.5, Replacing the Lens.***

2.1 Quick Setup

Follow these steps for quick setup of the projector in a standard floor mount position. Use either the remote or built-in keypad to work with the projected image.

STEP 1 ' Position the Projector

Set the projector at the expected throw distance (projector-to-screen distance) and vertical position. See ***2.3, Projector Position and Mounting*** and ***Appendix D***. Make sure that the projector is level from side-to-side (see ***Section 2.9, Leveling***).

STEP 2 ' Connect a Source

Locate the main input panel at the rear of the projector and connector your source to the appropriate input:

◊ **INPUT 1** (upper right area) – RGB input via BNC connectors.

◊ **INPUT 2 (**left of BNCs) – digital or analog signals (DVI-I) from a computer.

◊ **INPUT 3** (upper middle area) – composite video.

◊ **INPUT 4** (upper middle area) – S-video.

◊ **INPUT 5** (lower area of *Roadster* panel) – a factory-installed *Dual SD/HD-SDI* module that can accept serial digital.

◊ **INPUT 6** (lower area) – for optional input modules (see ***Appendix F***).

STEP 3 ' Connect to Power

⚠ **The North American rated line cord is provided with each projector. Ensure that you are using a line cord that meets the appropriate rating standards (CCC for use in China, PSE for use in Japan).**

Connect the projector's line cord to the AC receptacle* at the lower rear corner on the rear of the projector, and to proper AC—note the socket outlet must be installed near the equipment and is easily accessible. Use ***only*** the line cord provided with the projector. Power requirements are shown below, with complete information in ***Section 6.***

****NOTE:*** *The Roadster S+20K has an integral line cord.*

◊ The *Roadster S+ 12K* requires 200-240 VAC, 50-60 Hz, 12 amps @ 200 VAC.
◊ The *Roadster S+ 16K* and the *Mirage S+ 14K* require 200-240 VAC, 50-60 Hz, 16 amps @ 200 VAC.
◊ The *Roadster S+ 20K* requires 200-240 VAC, 50-60 Hz, 24 amps @ 200 VAC.

⚠ WARNING ⚠

Do not attempt operation if the AC supply and cord are not within the specified voltage and power range. See *Section 6*.

STEP 4 ' Turn On the Projector and Lamp

1. On the projector, turn the power breaker/switch on. The LCD Status Display Window displays the initializing window for 15 seconds, then indicates **POWER OFF** (see right).
2. Using the keypad, do one of the following:
   - Press and hold ⏻ briefly to toggle the lamp on.
   - Press and release ⏻ followed immediately by ▲.
   - Press ⏻ ⏻ to toggle from the off state.

   The LCD Status Display Window will display **Powering Up** and then, **Power On** (Figure 2.1) while the 2 Digit Status/Error Code Window will display **ON**.

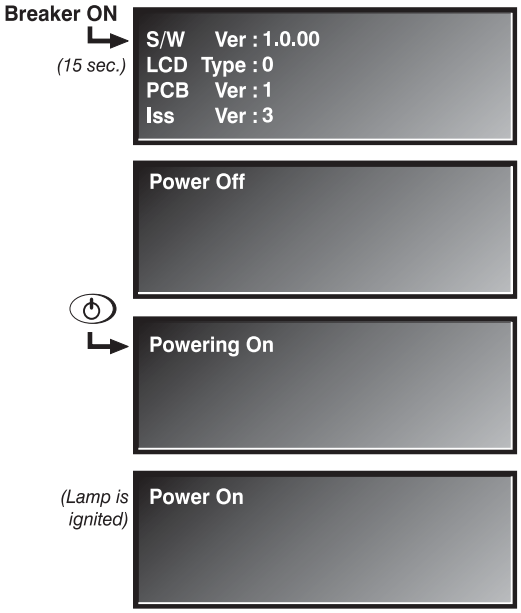

Figure 2.1. Turning on the projector

STEP 5 ' Select a Source

Using either keypad, press Input 1, Input 2, Input 3, Input 4, Input 5, or Input 6 to select and display the image for the source you connected in Step 2. The display will resize as needed, producing an image as large as possible for the type of source present.

STEP 6 ' Optimize the Display

Press Auto Setup on the built-in keypad (or A on the remote keypad) to initiate an automated process in which the projector optimizes critical display parameters such as size, position, pixel tracking, etc., for the current source. *Auto Setup* can save time in perfecting a display, and you can modify the adjustments later as desired. See *Section 3*.

STEP 7 ' ***Lens Adjustments***

NOTE: *Not applicable to fixed lenses. Focus fixed lens by turning focus ring on lens.*

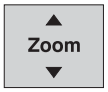

Figure 2.2

- ***ZOOM:*** With the input image displayed:
  - If remote keypad: Press Zoom ◀ or ▶.
  - If built-in keypad: Press Zoom ▲ or ▼.

  Hold the key down to see the effect –arrows in the display indicate the direction of the zoom (Figure 2.2).

- ***FOCUS:*** With the input image displayed:
  - If remote keypad: Press Focus ◀ or ▶.
  - If built-in keypad: Press Focus ▲ or ▼.

  Hold the key down to see the effect – arrows in the display indicate the direction of the focus (Figure 2.3).

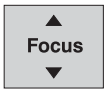

Figure 2.3

- • ***LENS OFFSET:*** To move the image:
  - If remote keypad: Press either Lens H ◀ ▶ or Lens V ▲ ▼ (Figure 2.4).
  - If built-in keypad: Press Lens Shift and use the arrow keys.

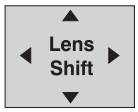

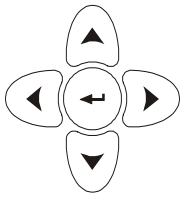

Figure 2.4

Step 8 ' ***Image Adjustments***

Press Menu or ≡ (remote) to access display parameters described in ***Section 3.***

.

2.2 Installation Considerations

Although this projector delivers a high brightness, quality output, final display quality could be compromised if the projector is not properly installed. This subsection discusses issues you should consider before proceeding with a final installation. Even if you do not intend to use the projectors in a fixed and permanent installation, the following information will help you to better understand what you can do to enhance display performance

Lifting, Hoisting, and Stacking ' For any new installation, you will likely have to safely lift or hoist the projector into place. Keep in mind the following guidelines for safety.

Lifting

All models include handles for convenient ***hand transport only***, such as when a projector is lifted from a shipping container to a table. Note the following:

◊ The handles are intended to support the weight of ***one*** projector only.
◊ The handles are intended to support a projector for a ***brief*** time only.
◊ The handles are ***not*** safety points, nor points from which to hoist or suspend the projector.

⚠ WARNINGS ⚠

- **The handles can't support more than *1* projector.**
- **Do *not* use handles for extended time periods.**
- **Do *not* use the handles as safety points, or as points from which to suspend or hoist the projector.**

Hoisting

Four integral rigging points on the top of the projector (Figure 2.5) and eight on the bottom (Figure 2.6) enable either upright or inverted hoisting. For either orientation, hoist an individual projector, or up to 3 projectors in a stack.

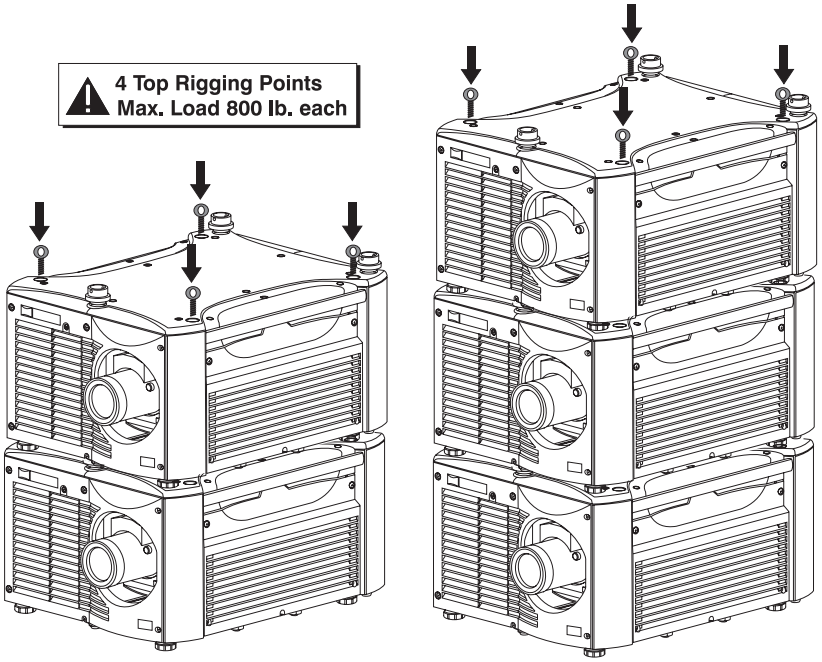

Figure 2.5. Top Rigging Points

RULES FOR ALL HOISTING:

◊ Use at least ***4*** rigging points for hoisting up to ***3*** projectors.

◊ Connect safety cables, and rigging equipment to the designated locations on the projector.

◊ Use hoisting and rigging equipment suitable to your application such as clamps, cables, eyebolts, or straps, and which accommodate the load rating. All integral, metric hardware on the projector accepts an M12 thread only.

◊ Never hoist a projector by its feet, handles, or any other component (Figure 2.7).

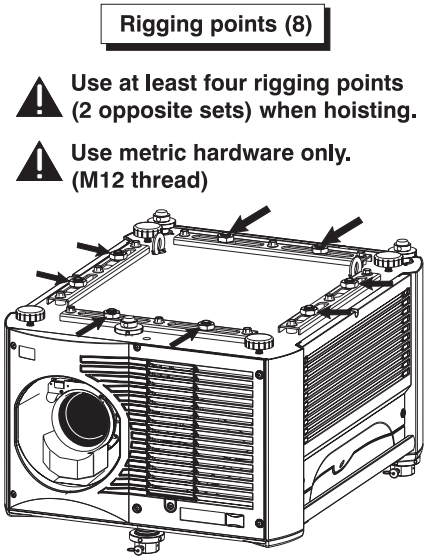

Figure 2.6. Bottom Rigging Points

⚠ WARNING ⚠
Use metric hardware only.
Never force incompatible threads.

⚠ RECOMMENDED ⚠
Remove the lens before hoisting a projector.

⚠ WARNING ⚠
Never hoist a projector by its feet, handles, or any other component.

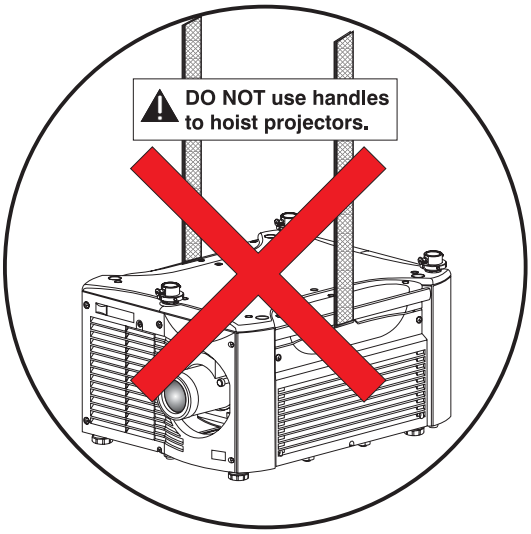

Figure 2.7. NEVER Use Handles for Hoisting or as Safety Points

Hoisting Procedure ' This procedure applies to one or more projectors. To hoist a stack, first stack 2 or 3 projectors according to the stacking procedure included in this manual. Never stack or hoist more than 3 projectors together.

STEP 1 ' ***Remove lens (recommended)***

To prevent possible lens damage during hoisting, remove the lens. See ***4.4, Replacing the Lamp and Filter.***

STEP 2 ' ***Retract feet***

Retract the adjustable feet if the projector is inverted to prevent the hoisting hardware from becoming snagged.

STEP 3 ' Attach safety cables

Attach a safety cable to each of the (2) eyebolts mounted on the bottom of the projector (Figure 2.8).

⚠ WARNING ⚠
Always use at least 2 safety cables for <u>any</u> hoisting.

⚠ WARNING ⚠
Attach safety cables to the 2 eyebolts.

NOTE: *When hoisting a non-inverted projector or stack, add 2 safety eyebolts in the front and rear threaded holes provided on the top of the projector. Make sure the eyebolts are rated adequately for the load. Secure safety cabling to both eyebolts.*

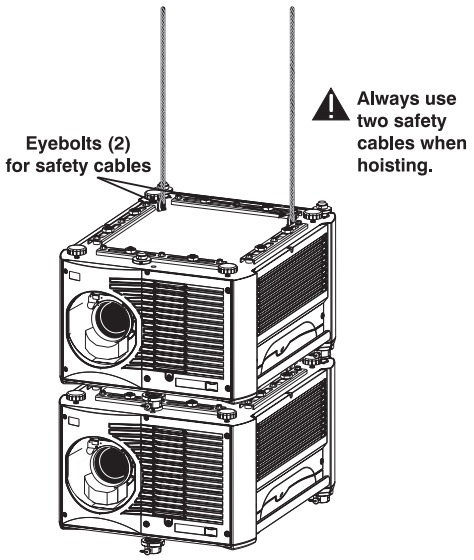

Figure 2.8. Attach Safety Cables
NOTE: ADD EYEBOLTS (2) IF NON-INVERTED

STEP 4 ' Attach rigging hardware

Secure your rigging components to the appropriate rigging points—8 sliding points are provided on the bottom. Tighten the nut at each required location (Figure 2.9) to prevent sliding.

NOTES: 1) *Use* ***at least 4*** *rigging points for all hoisting.* ***2)*** *Use straps, clamps or cabling with load capacity adequate for the total projector weight. See* ***Section 6****.* ***3)*** *Do not join the rigging straps or cables to a common point—keep separated as shown.*

⚠ WARNINGS ⚠
- **Maximum stack = 3 projectors.**
- **Stack first, then hoist.**

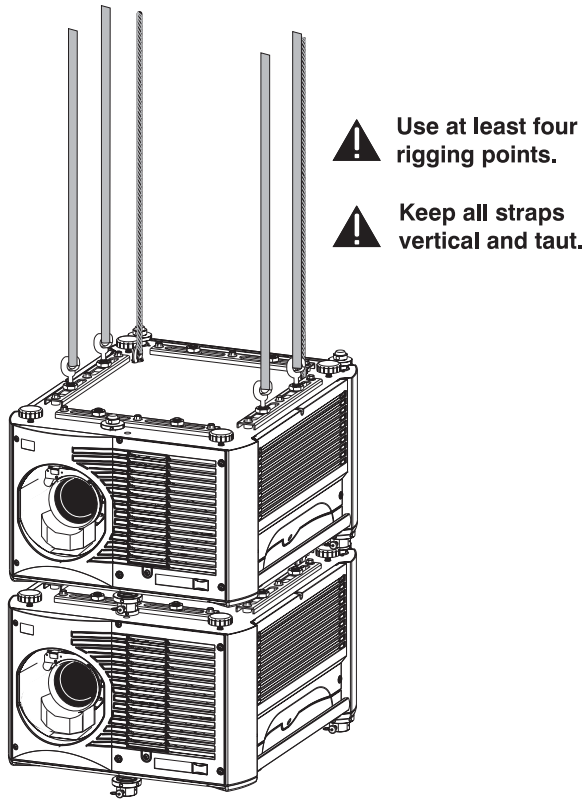

Figure 2.9. Using the Rigging Hardware

Stacking Procedure '

NOTES: 1) *Requires stacking hardware provided standard with* ***Roadsters*** *only. Available separately for* ***Mirage S$^+$****.* ***2)*** *Installation requires at least 2 people.*

Roadster and Mirage S$^+$ projectors can be stacked in either the upright or inverted position. Do not mix orientations—i.e., inverted with upright—in a stack. Secure a maximum of 3 projectors with the stacking mounts as described below.

⚠ WARNING ⚠
Do not stack more than 3 projectors.

⚠ WARNING ⚠
Christie stacking hardware required. The top projector could slide off and cause injury or death.

⚠ WARNING ⚠
Never carry a stack.

STEP 1 ' Position the projectors

Place the projectors to be stacked on a secure table or cart.

- Place one projector on its side to access its adjustable feet and stacking legs (Figure 2.10).
- Orient the other projector in either upright or inverted position as required (remember, each projector in a stack must be in the same orientation).

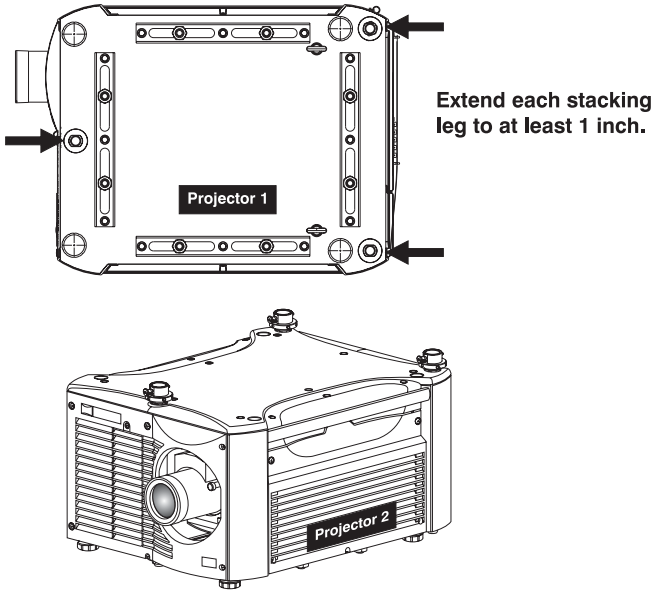

Figure 2.10. Adjust the Feet

STEP 2 ' Fully retract the (4) adjustable feet

Retract each foot as far as possible by turning it clockwise.

- If upright – retract the feet on top projector.
- If inverted – retract the feet on bottom projector.

STEP 3 ' *Extend the (3) stacking legs*

Extend the stacking legs by turning them so that at least 1 inch of thread is visible on each. This clearance accommodates the up-or-down movement for aligning the images from stacked projectors. Extend all 3 legs equally (Figure 2.11).

- If upright – extend legs on top projector (shown).
- If inverted – extend legs on bottom projector.

⚠ IMPORTANT ⚠
Extend the stacking legs equally by at least 1 inch.

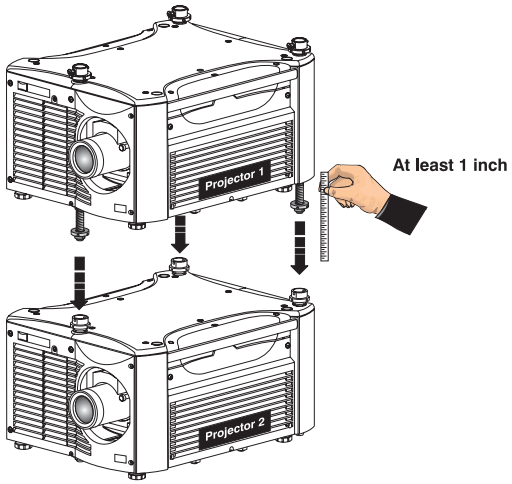

Figure 2.11. Extend 3 Stacking Legs
(UPRIGHT STACK SHOWN)

STEP 4 ' *Loosen the rear stacking leg nuts*

On the rear stacking legs, loosen the nuts so the legs have some lateral movement for easier alignment with the stacking mounts on the other projector.

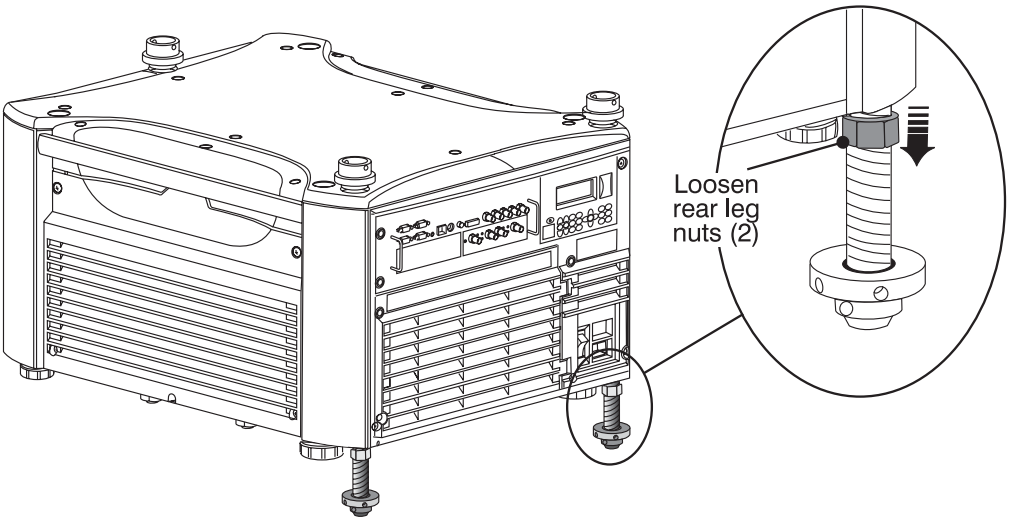

Figure 2.12. Loosen 2 Nuts

- If upright – release on top projector.
- If inverted – release on bottom projector.

STEP 5 ' *Release and remove (3) safety pins*

The safety pins must be removed from the stacking mounts so that the stacking legs can fit into the mounts (Figure 2.13).

- If upright – remove the pins from the mounts on the bottom projector.
- If inverted – remove the pins from the mounts on the top projector.

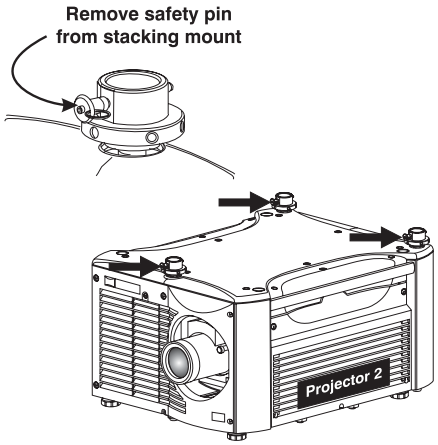

Figure 2.13. Remove Safety Pins

STEP 6 ' *Place top projector on bottom projector*

⚠ WARNING ⚠

Minimum of 2 people required.

With one person on each side, lift the top projector on to bottom projector, aligning all three stacking points between projectors. Legs should fit inside stacking mounts.

STEP 7 ' *Align holes in (3) stacking mounts and (3) stacking legs.*

On each stacking mount, turn the adjusting wheel slightly until the hole in the top portion of the mount lines up with the hole in the stacking leg (Figure 2.14).

NOTE: *You can increase leverage by using a screwdriver in the holes.*

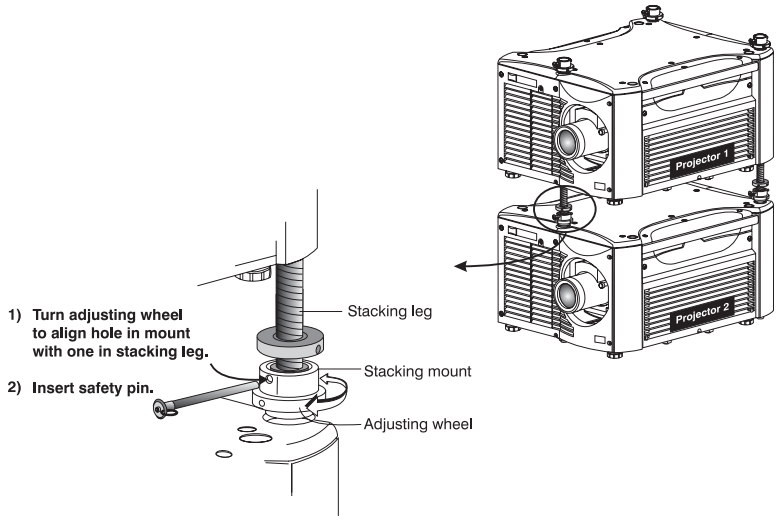

Figure 2.14. Align Holes in Mounts and Legs, and LOCK with Pin

STEP 8 ' *Insert (3) safety pins and LOCK all*

⚠ WARNING ⚠

Critical Safety Procedure.

At each of the (3) stacking points, insert the safety pin fully through the holes in the stacking mounts and stacking legs (Figure 2.14). Ensure that each pin is ***fully inserted*** to engage the safety lock and secure the projectors together. Failure to engage the safety lock could cause the projectors to separate and result in injury or death.

⚠ WARNING ⚠

Failure to engage the safety lock could cause the projectors to separate and result in injury or death.

STEP 9 ' ***Leg Nuts***

Before hoisting, firmly tighten the nuts on the (2) rear stacking legs (Figure 2.14). Or, if you are ready to align the projectors to one another, leave these nuts slightly loose until after the alignment.

STEP 10 ' ***Repeat STEPS 1–9 for a third projector.***

⚠ WARNING ⚠

Never stack more than 3 projectors.

Alignment Procedure ' Stacked projectors must be correctly aligned to one another so that the resulting display is optimized and as sharp as possible. If you are also hoisting the stack, hoist the stack into place first, then align. Lock all stacking hardware into place to maintain your alignment.

⚠ IMPORTANT ⚠

Make sure the stacking legs have been extended by at least 1 inch, and are slightly loosened. Refer back to Figure 2.11.

Before You Begin

- ❑ Always align to the *fixed* projector. In floor-mount or table-mount (i.e., ***non-hoisted***) stacks, you will align to the ***bottom*** projector as shown in drawings below. In ***hoisted*** stacks, align to the ***top*** projector.
- ❑ Leg nuts must be loosened before alignment; otherwise the stacking mounts will not turn and allow movement of the projector.

STEP 1 ' ***Position the first image (fixed projector)***

Position the fixed projector's image as desired and align the other image(s) to it as described below.

STEP 2 ' ***Display the grid test pattern***

To distinguish each image, enable "Red" for one display and "Green" for the other. See ***3.3, Using the Keypads*** if you need help enabling colors.

STEP 3 ' ***Adjust zoom and focus***

Minimize each projector's zoom and images are in focus.

STEP 4 ' ***Try aligning the two grid patterns***

Adjust zoom and offset on the top projector to precisely move its test pattern display on to the bottom test pattern. When properly aligned, all red/green grid lines in the combined image will turn yellow.

- If all lines are well aligned, skip to STEP 7 to lock all stacking mounts.
- If alignment needs improvement, proceed with the next step.

STEP 5 ' *Align the centerlines of the grid*

Turn the (2) rear stacking mount wheels to move the top projector as necessary for well-aligned centerlines. Use a screwdriver in the holes around the rim of each adjusting wheel for better leverage and control.

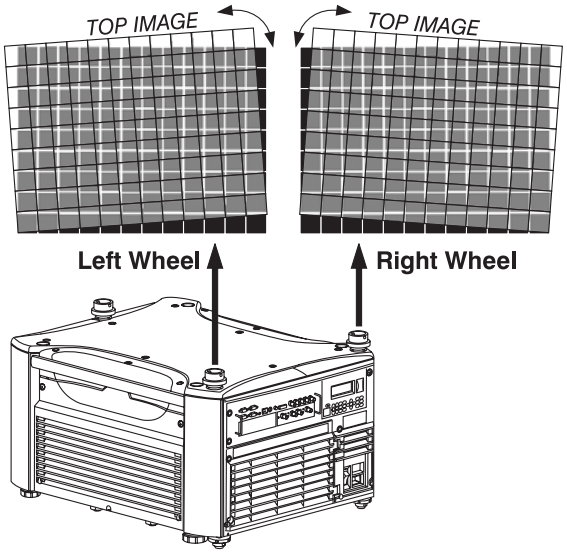

Figure 2.15. Adjustment Directions (Tilt)

HOW TO MOVE THE IMAGE:
Turned independently, each stacking mount acts as a pivot point for the opposite edge of the display (Figure 2.15). For example, turn the right mount to tilt the left portion of the image up or down, and turn the left mount to tilt the right portion of the image up or down. Turn together to raise or lower the top image like an offset adjustment, or turn the front stacker.

IF THE CENTER LINES FORM AN "X": This indicates that the projectors (and images) are slightly tilted in relation to one another. Turn one mount to raise one side, and/or turn the other mount to lower other side. See Figure 2.15.

IF THE CENTER LINES ARE PARALLEL BUT MISALIGNED:

- If centerlines are out by the same amount from top and bottom – use offsets (on top projector) to bring the centerlines into alignment.

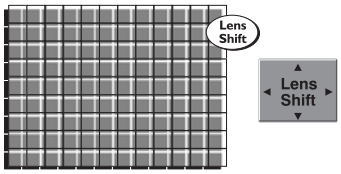

- If centerlines are parallel but others are not, turn the front stacking mount wheel to bring the centerlines into alignment.

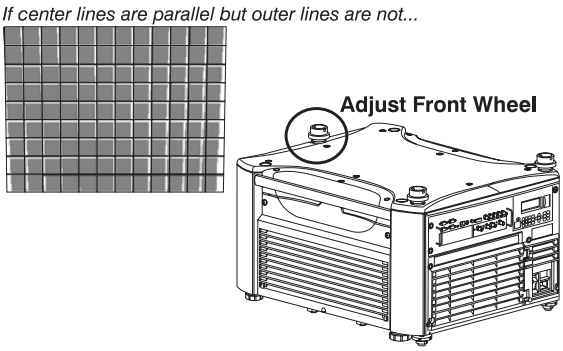

STEP 6 ' *Align the edges of the grid*

With centerlines aligned, adjust zoom (top projector) to align the edges of its image with the other image. Then adjust focus. When aligned, all lines from the combined red/green grids will be yellow.

STEP 7 ' Secure all stacking wheels and leg nuts

⚠ WARNING ⚠

Critical Safety Procedure.

- ❑ Turn all (3) stacking wheels until they are ***firmly secure*** against the rest of the stacking mount (Figure 2.16).
- ❑ Secure both (2) rear leg nuts against the bottom of the projector.

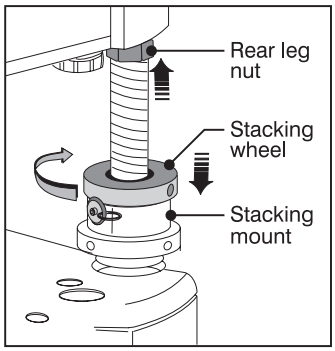

Figure 2.16. Secure All Hardware

STEP 8 ' Repeat steps 1 to 7 for a third projector

Installation Type '

Choose the installation type that suits your needs: front or rear screen, floor mount or inverted mount.

Front Screen, Floor Mount Installation

ADVANTAGES	CONSIDERATIONS
• Easy to set up • Can be moved or changed quickly • Easy to access	• Shares floor space with audience

Front Screen, Inverted Mount (ceiling) Installation

ADVANTAGES	CONSIDERATIONS
• Does not take up audience space • Projector is unobtrusive • Projector cannot be accidentally moved	• Installation is more permanent • It is more difficult to access the projector

Rear Screen, Floor Mount Installation

ADVANTAGES	CONSIDERATIONS
• Projector is completely hidden • Projector is easily accessed • Usually good ambient light rejection	• Requires separate room • Requires rear projection screen

Rear Screen, Inverted Mount (ceiling) Installation

ADVANTAGES	CONSIDERATIONS
• Projector is completely hidden • Usually good ambient light rejection	• Requires separate room • Installation cost is usually higher

Rear Screen, Floor Mount with Mirror

ADVANTAGES	CONSIDERATIONS
• Projector is completely hidden • Usually good ambient light rejection • Requires less space behind screen than other rear screen installations	• Requires separate room • Installation cost is usually higher

Screen Type '

Front Screen Installations

While there are two basic screen types, flat and curved, generally flat screens are recommended for this projector (Figure 2.17). Flat screens offer a gain of about 1 with a viewing angle just less than 180°. Incident light reflects equally in all directions so the audience can see the display from various angles. Because of the low gain, flat screens are most effective when ambient lighting is reduced, although this difference may be negligible given the high brightness output from this projector.

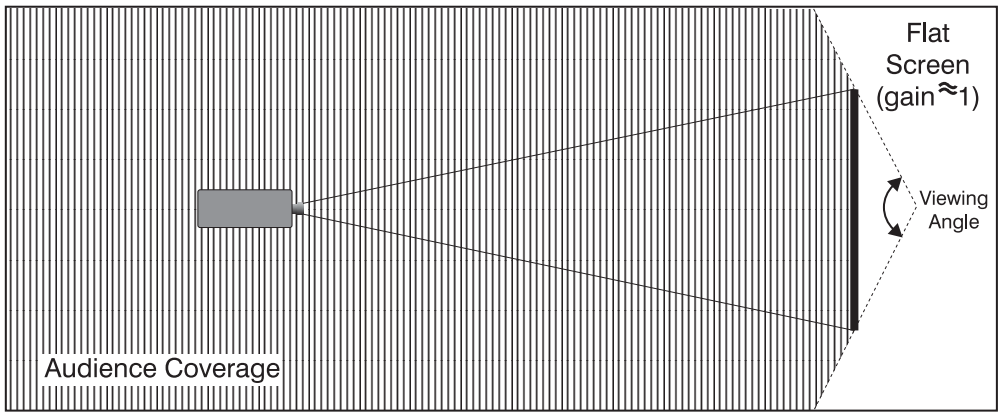

Figure 2.17. Audience Coverage with Flat Screen

NOTE: *Lenses for this projector are designed primarily for use with flat screens, but the projector depth-of-field range allows the lens to be focused on curved screens as well. While focus remains sharp in the corners, there may be significant pincushion distortion, primarily at the top of the screen.*

Rear Screen Installations

There are two basic types of rear screens: diffused and optical . A *diffused* screen has a surface that spreads the light striking it. Purely diffused screens have a gain of less than 1. The main advantage of the diffused screen is its wide viewing angle, similar to that of a flat screen for front screen projection. *Optical* screens take light from the projector and redirect it to increase the light intensity at the front of the screen. This increase at the front reduces the intensity in other areas. A viewing cone, similar to that of a curved front screen installation, is created.

To summarize, optical screens are better suited for brightly lit rooms where the audience is situated within the viewing cone. Diffused screens may be better suited when a wide viewing angle is required but there is low ambient room lighting.

Screen Size '

Screen size may vary from 4 feet (122 cm) to 45 feet (1372cm) diagonal, depending on the lens you are using. For instance, a 0.73:1 lens can produce a 5 foot (150 cm) to a 14 foot (548 cm) image size depending on the location of the projector, whereas a 4.5-7.3:1 zoom lens produces an 8 foot (160 cm) to 40 foot (438 cm) image size. Choose a screen size appropriate for your lens and application. Keep in mind that if the projector will be used to display text information, the image size must allow the audience to recognize all text clearly. The eye usually sees a letter clearly if eye-to-text distance is less than 150 times the height of the letter. Small text located too far from the eye may be illegible at a distance no matter how sharply and clearly it is displayed.

Ideally, to fill a screen with an image, the aspect ratio of the screen should be equal to the aspect ratio of the image. The aspect ratio of an image is expressed as the ratio of its width to its height such as a 4:3 aspect. Standard video from a VCR has a 4:3 aspect ratio. For example, to display a VCR output with a 4:3 aspect ratio onto a 10-foot (3m) high screen, the width of the screen must be at least 13.3 feet (4m).

Screen Aspect Ratio

Aspect ratio describes the proportion of the screen and is expressed as the ratio of width to height, such as “4:3” or “5:4”. Although image size and image aspect ratio can both be adjusted quickly through projector software, it is still a good idea to choose a *screen* aspect ratio that is most appropriate for your intended applications.

Ideally, to exactly fill a screen with an image, the aspect ratio of the screen should correspond to the aspect ratio of the image, which depends on the source in use. For example, standard video from a VCR has a 4:3 ratio (approximately), whereas a high-resolution graphics signal typically has a 5:4 aspect ratio. By default, images from your projector will be as large as possible and will maintain their aspect ratio.

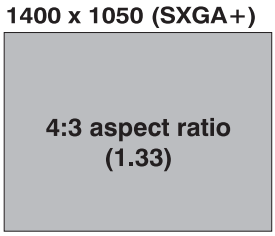

Figure 2.18. Aspect Ratio

The SXGA+ (1400 x 1050) aspect ratio for the *Roadster S*$^{+}$ and *Mirage* models is 4:3 (Figure 2.18).

Ambient Lighting

The high brightness of this projector is well suited for locations where ambient lighting might be considered less than ideal for projection. Even a typical room or large auditorium fully lit with ceiling lights and windows rarely requires special attention. Contrast ratio in your images will be noticeably reduced only if light directly strikes the screen, such as when a shaft of light from a window or floodlight falls on the image. Images may then appear washed out and less vibrant.

In general, avoid or eliminate light sources directed at the screen.

Other Considerations

Other considerations and tips that can help improve your installation:

- Keep the ambient temperature constant and below 35°C (95°F). Keep the projector away from heating and/or air conditioning vents. Changes in temperature may cause drifts in the projector circuitry that may affect performance.
- Keep the projector away from devices that radiate electromagnetic energy such as motors and transformers. Common sources of these include slide projectors, speakers, power amplifiers, elevators, etc.
- Choose the best screen size for the application. Since more magnification reduces brightness, use a screen size appropriate for the venue but not larger than required. Installing a large screen in a small room is similar to watching television at a close range; too large a screen can overpower a room and interfere with the overall effect. A good rule of thumb is to be no closer than 1.5 times the width of the screen.

2.3 Projector Position and Mounting

Installation type, screen type, and lighting all affect where the projector is positioned. In addition, both throw distance (the distance between the projector and screen) and vertical position (the height of the projector in relation to the screen) must be determined for every new installation. Both depend on the screen size and lens type you are using. Make sure that the room can accommodate the required position of the projector for the chosen screen size.

Throw Distance

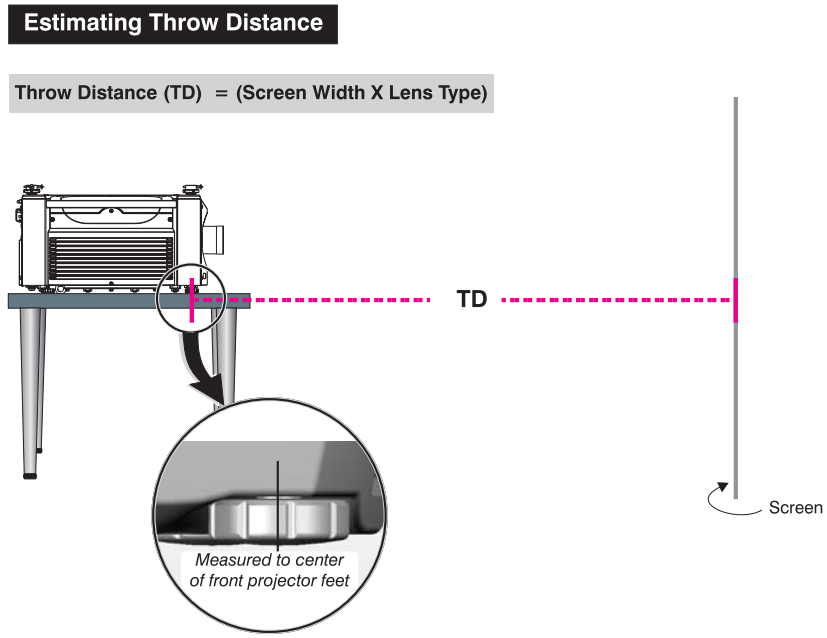

Figure 2.19. Estimating Throw Distance
(SEE APPENDIX D)

For any installation, an accurate throw distance (TD) must be determined in order for the image to be of the right size for your screen–the farther the projector is from the screen, the larger the image. Throw distance is the distance between the projector's front feet axes and the screen (Figure 2.19), and is roughly equal to the horizontal width of the screen multiplied by the throw ratio of the installed lens. Once you know your screen size and lens, you can estimate throw distance needed. For example:

- Screen Width = ***10*** feet
- Lens Type is ***0.7:1***
- Throw Distance (TD) = ***10*** feet x ***0.7*** = *7* feet

NOTES: 1) *If your projector is slightly tilted in relation to the screen, typical for large venues or flown installations, throw distance still represents the smallest measurement between the screen and front feet.* ***2)*** *For proper placement in an installation, always refer to the throw distance formula and/or chart for your lens as listed in* ***Appendix D****. Keep in mind that due to lens manufacturing tolerances for lens focal length, actual throw distance can vary ±5% between lenses described as having the same throw ratio*

Vertical & Horizontal Position

THE VERTICAL POSITION of the projector in relation to the screen also depends on the size of the screen and the lens type. Correct vertical position helps ensure that the image will be rectangular in shape rather than keystoned (having non-parallel sides) and that image focus and brightness both remain optimized.

If necessary, vertical position of the image can be offset—that is, moved up or down in relation to lens center—by using the motorized offset function. Starting with no offset, the image from this projector can be moved up or down by a maximum distance of 525 pixels for SXGA+ resolution, resulting in the entire image displayed above or below lens center. See Table 2.1 and Figure 2.20.

NOTE: *Not applicable for the fixed lens.*

THE HORIZONTAL POSITION of the image can be offset—that is, shifted left or right of lens center—by using the motorized offset function. Starting with no offset, the image from this projector can be moved left or right by a maximum distance of 350 pixels for SXGA+ resolution, resulting in 75% of the image displayed to one side of lens center. See Table 2.1 and Figure 2.21.

Table 2.1. Maximum Amount of Image Offset from Lens Center

Lens Type (All motorized lenses)	Offset Movement		Max. Amount of Display Above or Below Lens Center		Max. Amount of Display Right or Left of Lens Center	
	↑ or ↓	← or →				
SXGA+ Lenses	100% (525 pix)	50% (350 pix)	1050 pixels ↑ or ↓	100%	1050 pixels ← or →	75%

NOTES: 1) *Offsets are not available with fixed lenses.* ***2)*** *When offset movement is stated as a percentage (see left columns), this represents the percentage of ½ image height or ½ image width* ***3)*** *All offset values are ±7%.*

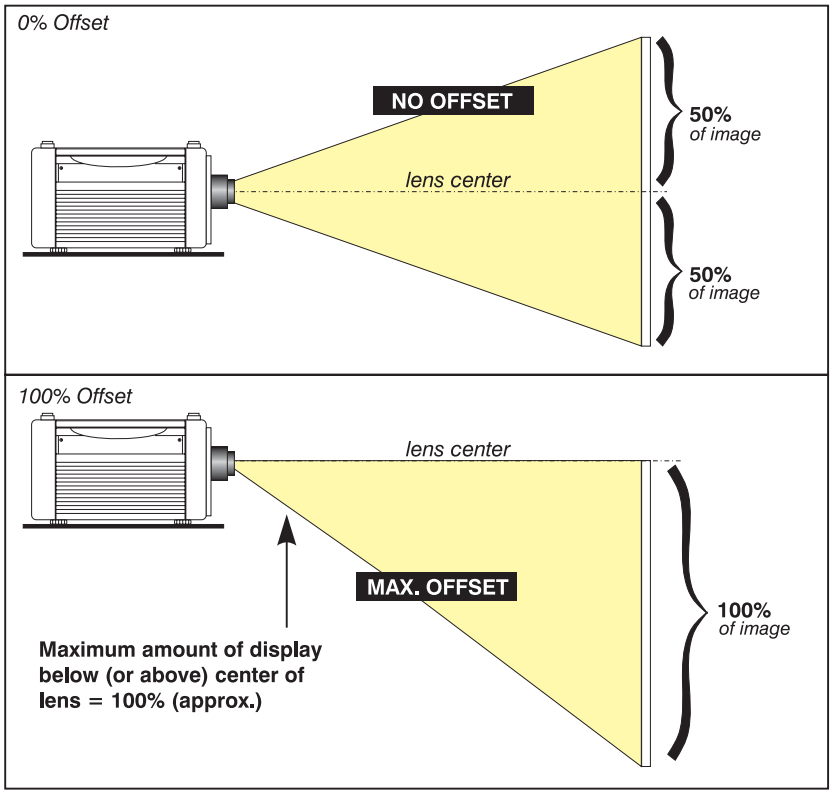

Figure 2.20. Maximum Vertical Offset

NOTES: 1) *If the image becomes keystoned or exhibits uneven brightness, the projector may simply be too high or low in relation to the screen.* ***2)*** *Recommended offset ranges can be exceeded, however this may affect image quality.* ***3)*** *Simultaneous* ***horizontal*** *and* ***vertical*** *offset limits the adjustment range of each.* ***4)*** *Offset can vary by ±7% and may be affected by the degree of zoom currently in use.*

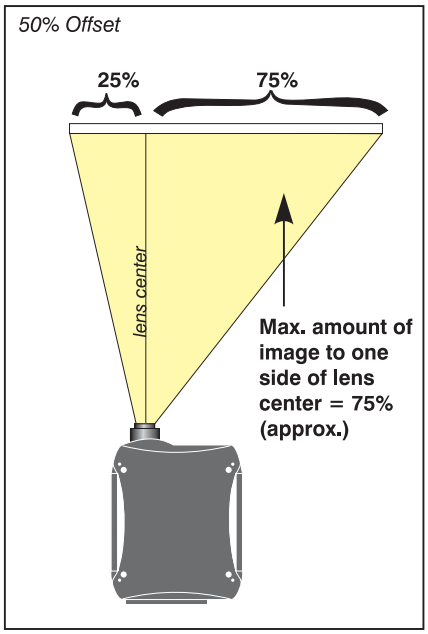

Figure 2.21. Maximum Horizontal Offsets

Tilting the Projector

The projector can be rotated and mounted at any vertical angle—i.e., you can tilt the face of the projector up or down as much as desired for your installation. Side-to-side tilt, however, must not exceed 15° (Figure 2.22). Keeping the projector fairly level in this manner ensures that the lamp axis is level, and is required for safe and reliable lamp operation. Always vent exhaust air *away* from the lens.

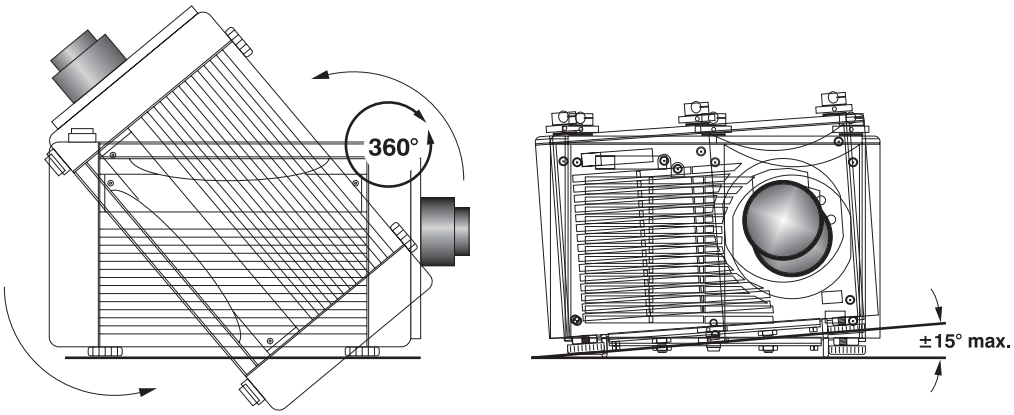

Figure 2.22. Vertical and Horizontal Tilt Ranges

CEILING MOUNT: Use ***only*** the Christie-approved ceiling mount kit designed for your projector. ***Refer to the installation instructions and safety guidelines provided in the kit.*** For more information, contact your dealer.

Folded Optics

In rear screen applications (Figure 2.23) where space behind the projector is limited, a mirror may be used to fold the optical path. The position of the projector and mirror must be accurately set. Consult your dealer or Christie for details.

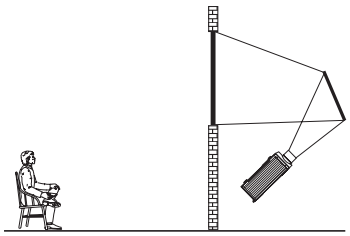

Figure 2.23. Rear Screen

2.4 Source Connections

Sources connect to the *Input Panel* located on the rear of the projector. As shown in Figure 2.24, the upper right corner (**INPUT 1**) typically accepts an *RGB signal* from an external analog RGB source, or it can also be used for YPbPr signals or additional video sources. Just to the left of the BNCs, the DVI-I connector (**INPUT 2**) accepts digital or analog display signals from a computer. Connect analog *composite video* at **INPUT 3**, or *S-video* at **INPUT 4** from devices such as VCRs, laser disk players, or DVD players. At **INPUT 5** (below **INPUT 1),** connect serial digital YCbCr (4:2:2) or compatible SMPTE signals (note this module can be moved to **INPUT 6** if desired).

There are also several optional interfaces available for connecting other sources—these interfaces slide into the remaining unused option slot, and can be done while the projector is running.

NOTES: 1) *See* ***Section 6, Specifications*** *for details regarding compatible inputs.* ***2)*** *Use high quality shielded cables only for all connections.* ***3)*** *The* ***Dual SD/HD-SDI*** *module shown is standard on the Roadster models, optional for the Mirage S+ series.*

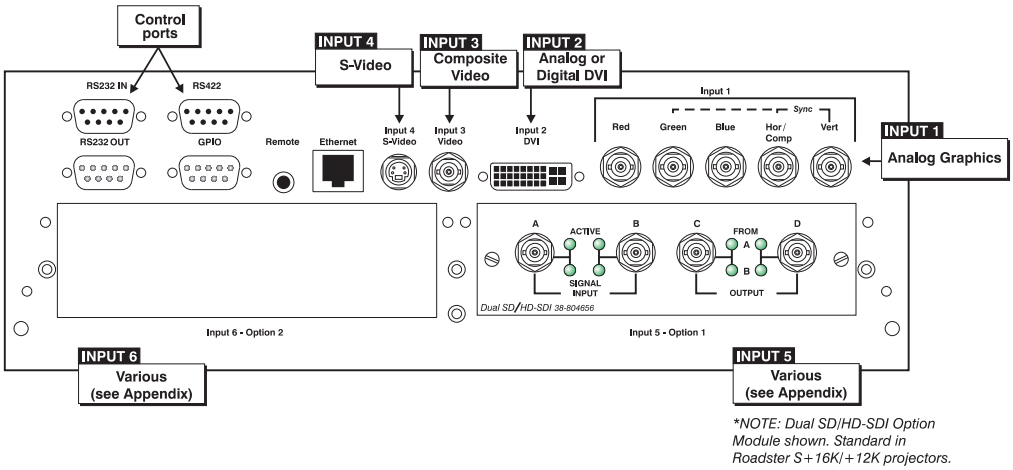

Figure 2.24. Input Panel

RGB Signals

INPUT 1 consists of 5 BNCs (connectors) for linking to a variety of RGB sources such as a PC, Mac, DEC, Sun, SGI, and others. This projector supports multiple sync types with RGB signals: sync-on-green, composite sync, and separate H & V syncs.

NOTE: *Depending on your source, you may need a custom adapter cable with BNC connectors at the projector end and a different type of connector at the other (such as a 15-pin "D" connector for some computer sources). Contact your dealer for details.*

Connect the **SYNC** BNC input(s) first. Then connect the red, green, and blue source outputs to the **RED**, **GREEN**, and **BLUE** BNCs on the **INPUT 1** panel. If the source uses sync-on-green, only the red, green, and blue connections are required. If the source provides a composite sync output, connect it to the **SYNC** input labeled **HOR/COMP**. If

the source provides separate horizontal and vertical sync outputs, connect horizontal sync to the **SYNC** input labeled **HOR/COMP,** and connect vertical sync to **SYNC** input labeled **VERT.** See Figure 2.25, below.

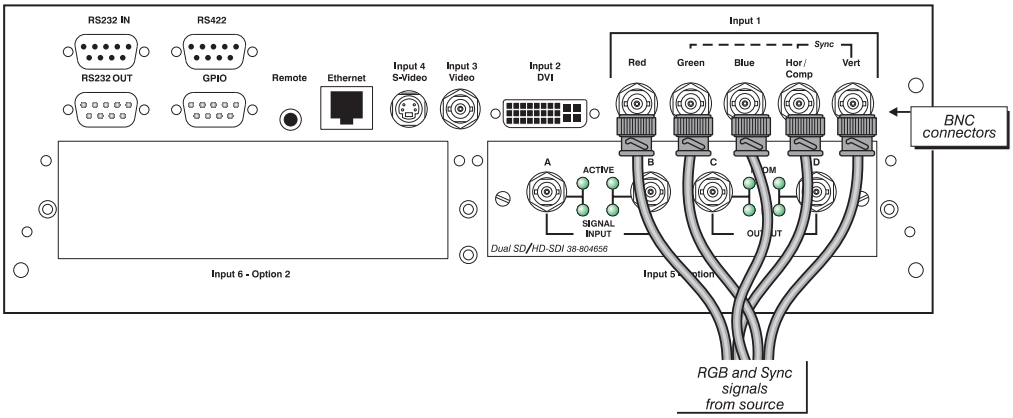

Figure 2.25. Connecting RGB Input

NOTES: 1) *If for some reason the projector fails to recognize a signal as an RGB signal, specify this* ***Color Space*** *option within the* ***Image Settings*** *menu. See* ***3.6, Adjusting the Image. 2)*** *To connect YPbPr signals–such as from DVDs or analog HDTV sources–to* **INPUT 1***, use the red, green and blue BNCs as described in* ***YPbPr Signals*** *(below)*

YPbPr (COMPONENT VIDEO)

Connect a YPbPr signal (a.k.a. *component video*) to **INPUT 1** or **INPUT 2** as shown in. Figure 2.26.

NOTES: 1) *If, for some reason, the projector fails to recognize a YPbPr signal, specify this* ***Color Space*** *option within the* ***Image Settings*** *menu. See* ***3.6, Adjusting the Image****. 2) Do not connect digital component signals (known as YCbCr) to* **INPUT 1** or **2**. *Use the appropriate digital interface option installed at* **INPUT 5 or 6**.

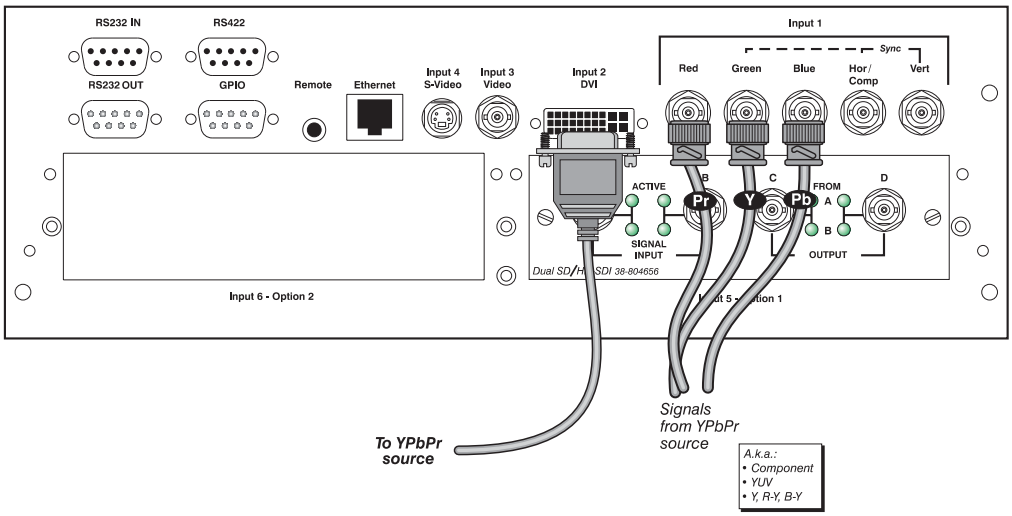

Figure 2.26. Connecting YPbPr

Composite Video

INPUT 3 and **INPUT 4** provide simultaneous connection of both a composite video source (**INPUT 3**) and an S-Video source (**INPUT 4**). See Figure 2.27 below.

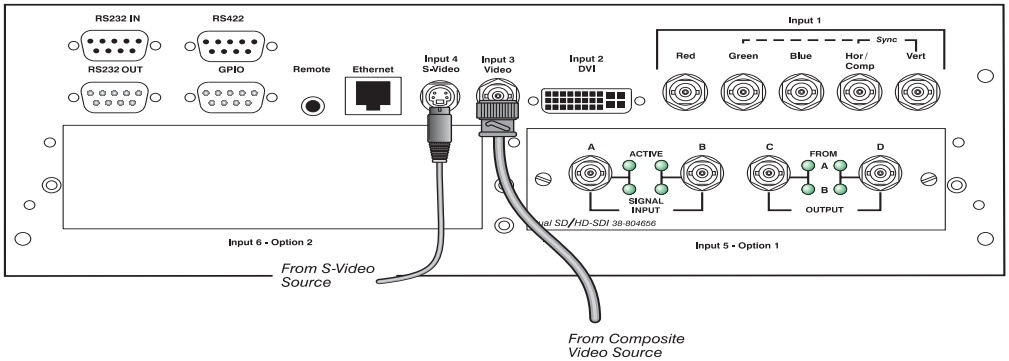

Figure 2.27. Connecting Composite Video

Dual SD/HD-SDI

Christie's *Dual SD/HD-SDI* input module is standard with the *Roadster S+* and factory-installed in **INPUT 5** or **INPUT 6**. The module's loop-through capability enables incoming serial digital data to be tiled across multiple screens, creating vast "mega resolution" displays. Alternatively, the multiple outputs can be overlapped for extra-bright displays, or simply distributed to additional projectors for multiple screens of the same image.

The module accepts one or two independent standard- or high-definition serial digital inputs, decodes them for processing in the main electronics of the projector, and outputs 10-bit YCbCr 4:2:2 video. Either input can be set as the active primary or secondary part of a Picture-in-Picture display, and either input can be looped through to one (or both) of the module's BNC outputs.

NOTE: *Selection of these inputs is described in* ***3.3, Using the Keypads****.*

Connect a compatible SMPTE 292M or SMPTE 259M-C source(s) to one or both of the inputs located on the left side of the module. The module will automatically detect the standard at each input and configure itself accordingly for correct termination of the signal. The module also detects and supports dual link 292M and SMPTE 372M video standards. For full details, consult the *Dual SD/HD-SDI* manual.

Other Optional Inputs

Optional modules allow you to increase your total number of inputs and/or accommodate different signal types, whether analog or digital. Install in the areas labeled **INPUT 6** or (if available) **INPUT 5.** Options include:

- RGB 500 Input Module
- RGB 400BA Input Module
- RGB 400 Active Loop Thru Input Module
- Composite/S-Video Input Module *(not currently supported with software v1.1 or higher)*
- PC250 Analog Input Module
- Serial Digital Input Module
- DVI Input Module
- Dual SD/HD-SDI Module *(standard on the Roadster series)*

For even more sources, connect a 3rd-party switcher to the RS232 IN port, or, if RS422-compatible, connect to the RS422 port.

NOTES: 1) *Optional* ***digital*** *interfaces cannot be used in a Marquee Case/Power Supply.****2)*** *See* ***Appendix F, Optional Input Modules*** *for a brief description of each interface.*

2.5 Connecting Communications

The most common method of controlling the projector is via one of its keypads. As an alternative, you may wish to communicate using a PC or similar controller. Such a device sends commands and receives feedback via serial links (2 types), Ethernet or GPIO communications to the projector, all described below.

Remote Keypads

As desired, direct the projector's IR remote keypad towards the display screen or the projector's IR sensors. Alternatively, connect the remote keypad by cable to the remote phono jack (labeled **REMOTE**) input at the back of the projector.

Other Controllers

RS232 Serial Communications

From most computers, connect a standard RS232 serial communication cable between the computer and the projector serial port labeled **RS232 IN**—this 9-pin connector is located on the input panel at the rear of the projector (Figure 2.28). In the *Communications* menu, set the projector's baud rate (default = 115200) to match that of the computer.

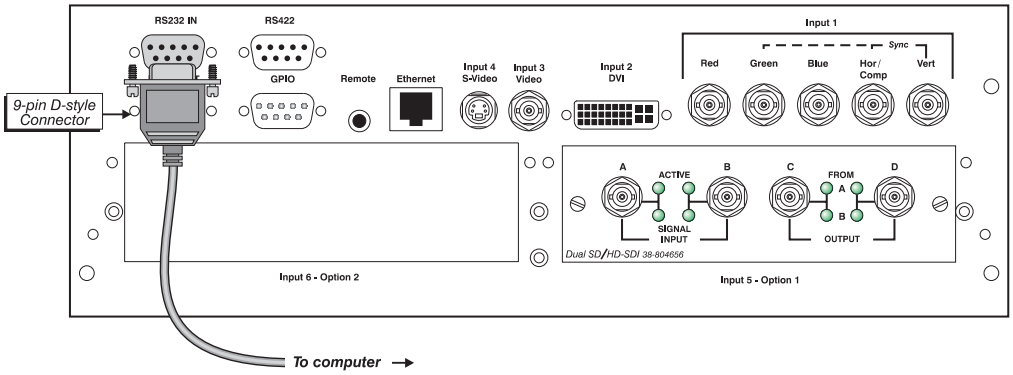

Figure 2.28. RS232 Serial Communications

Changing the baud rate is done in the projector's *Communications* submenu. See ***3.7, Adjusting System Parameters and Advanced Controls***.

RS422 Serial Communications

Some computers can provide RS422 serial communications (often through a plug-in adapter or external converter) rather than the more common RS232 standard. RS422 communication has differential "transmits-and-receives" and is generally better suited for long distances than is RS232 communication. Note that RS422 is ***not*** compatible with RS232—connecting an RS232-compatible PC to RS422 can damage the equipment at either end. Consult the documentation provided with your PC if you are unsure.

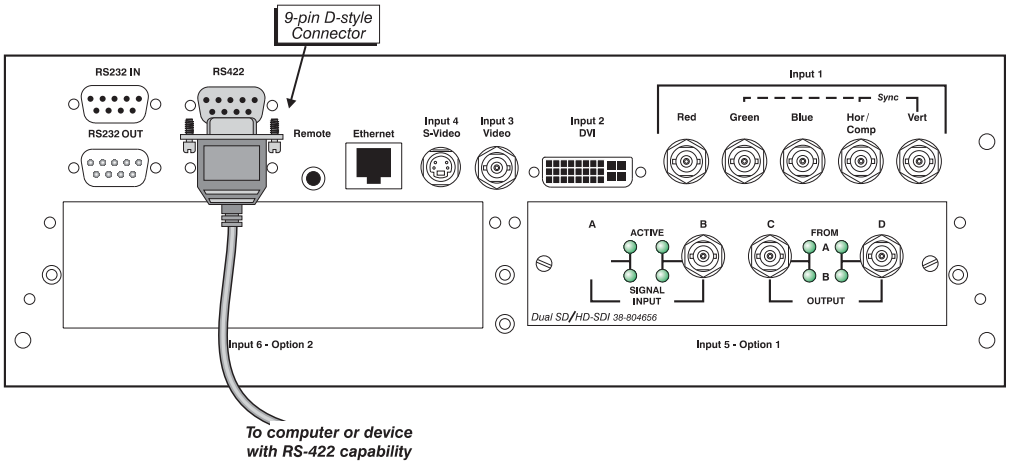

Figure 2.29. RS422 Connection to a Computer

The nine-pin RS422 connector is located at the rear of the projector (Figure 2.29). Use this port for communications to and from an RS422-compatible controller. In the *Communications* menu, set the baud rate to match that of your RS422 controlling device.

⚠ WARNING ⚠

Do not use an RS422 port unless you are using equipment with RS422 capability. The voltage levels of this signal can damage incompatible equipment.

Ethernet Communications

To add the projector to an existing Ethernet network with other equipment such as controllers and other projectors, connect standard CAT5 Ethernet cable between your Ethernet controller (or hub) and the Ethernet port at the rear of the projector as shown in Figure 2.30.

CONNECTING TO A PC: If you are connecting the Ethernet port directly to a PC (rather than a network or hub), make sure to use a *crossover* Ethernet cable. Keep in mind that an Ethernet link cannot be used for downloading a software upgrade to the projector—use RS232.

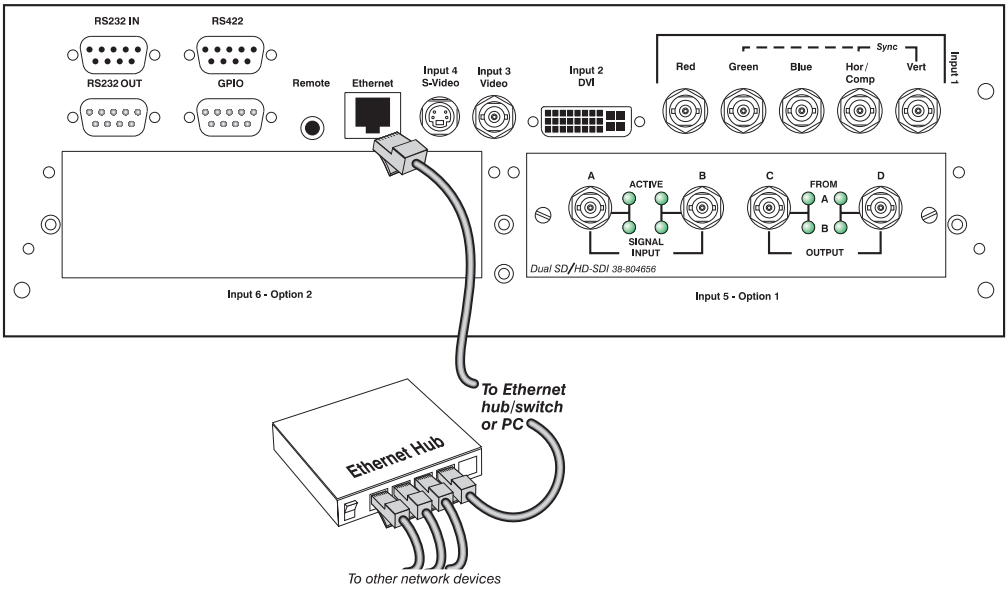

Figure 2.30. Connecting Ethernet

Upon connection to an Ethernet network, the projector's factory default IP address of 0.0.0.0 will automatically enable the DHCP function (if available on the network) to assign a new IP address that is valid and unique for that network. Or, if there is no DHCP function available on the network (or if a specific static IP address for the projector is preferred or required), you can set the address in the *Ethernet Settings* submenu or via an ASCII serial command.

NOTE: *Make sure the projector is connected to the network before attempting to change its IP address.*

Regardless of how it is assigned, once a projector has a valid and unique address it will respond to commands sent to this address. To determine the projector's current IP address, consult the *Status* or *Communications* menus.

Refer to ***3.7, Adjusting System Parameters and Advanced Controls*** for further information about setting up and using a projector connected via Ethernet.

The GPIO Port

The General Purpose In-Out (GPIO) port enables integration of the projector within an established control system (Figure 2.31). ASCII commands sent via the GPIO link are stored in projector memory, where they can be triggered as a sequence of events in the future. See ***Appendix E***.

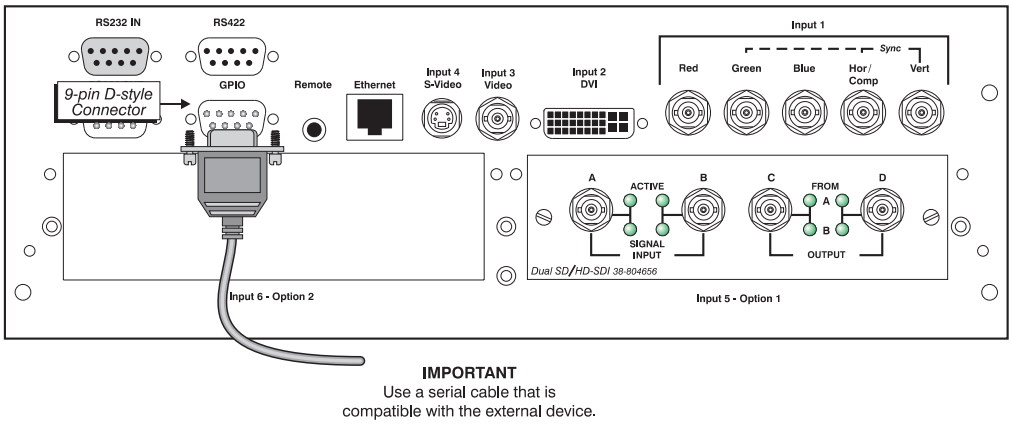

Figure 2.31. GPIO Port

2.6 Connecting Multiple Projectors

Serial Links

You may wish to chain two or more projectors together so that commands and communications to and from a controller are relayed to all projectors. Choose a hardware configuration that best suits your desired communication method.

RS232 NETWORK: To control multiple projectors with a computer/controller having an RS232 interface, first set all projectors to the same baud rate as the controller, then chain the projectors together by connecting the **RS232 OUT** connector of the first projector (already connected to the computer/controller) to the **RS232 IN** connector of the next projector in the chain. Continue connecting projectors in this manner until you've reached the last projector in the chain, so that only the last projector has an unused **RS232 OUT** port. See Figure 2.32.

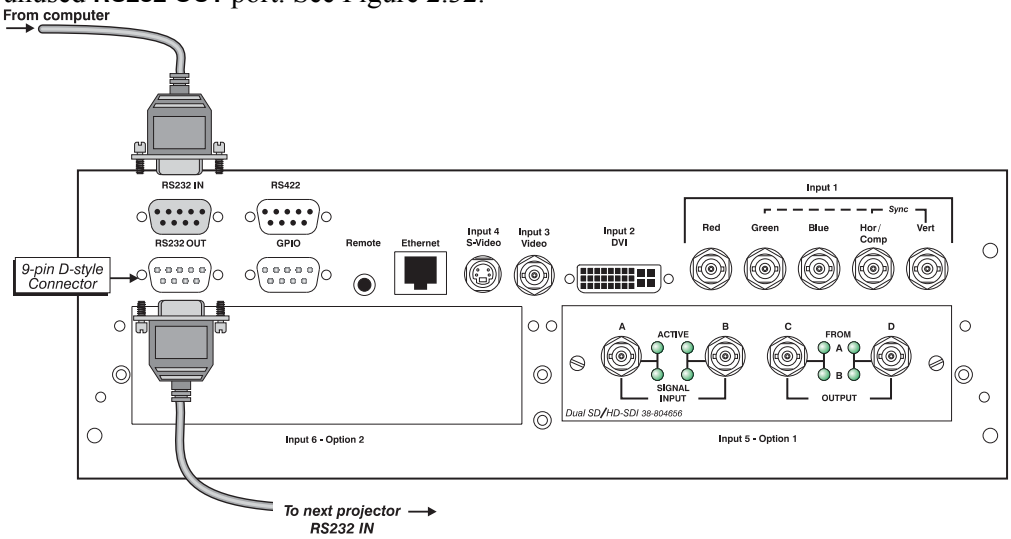

Figure 2.32. RS232 Serial Link Loop-Through at First Projector

MIXED NETWORK: To control multiple projectors with a computer/controller having an RS422 interface, first set them all to the same baud rate as your RS422 controller.

NOTE: *You must enable this combination of RS422 and RS232 in the Communications menu. Set the "Network Routing" option to "RS232 and RS422 Joined". See* ***Section 3*** *for details.*

Then chain the projectors together by connecting an **RS232** port of the first projector (already connected to the computer/controller through the **RS422** port) to an **RS232** port on the next projector in the chain. Continue connecting projectors in this manner until you've reached the last projector in the chain, so that only the last projector has one unused **RS232** port. See Figure 2.33.

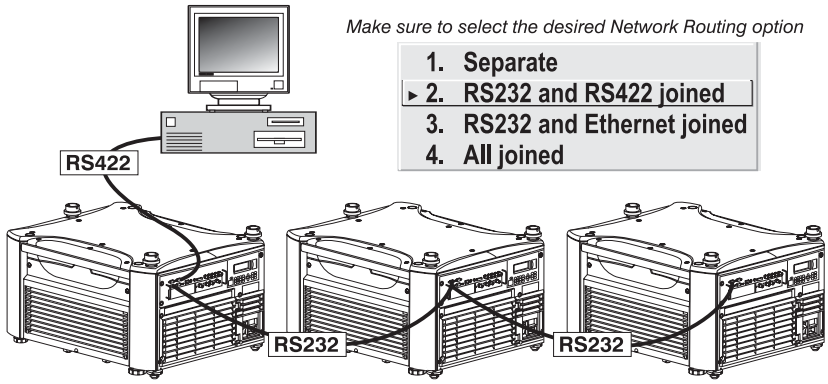

Figure 2.33. Mixed Serial Network

Note that communication parameters such as baud rate must be set to match the particular controlling device ***before*** connecting as a network—refer to the documentation that came with your controlling device in order to determine the proper baud rate. See ***3.7, Adjusting System Parameters and Advanced Controls*** if you need help changing the projector baud rate. In addition, set the Network Routing to "RS232 and RS422 Joined" if you want to reach all projectors.

NOTES: 1) *To avoid damage, connect only properly wired serial communication cables. See* ***Appendix C*** *for details.* ***2)*** *It is recommended that each RS232 communication cable be no more than 25 feet in length. Use high quality cables.*

Ethernet Networks

ETHERNET NETWORK SETUP: To add one or more projectors to an Ethernet network, use standard CAT5 cable to connect each projector's Ethernet port to a hub on to the network. A controller or PC must also be connected to the hub. See Figure 2.34.

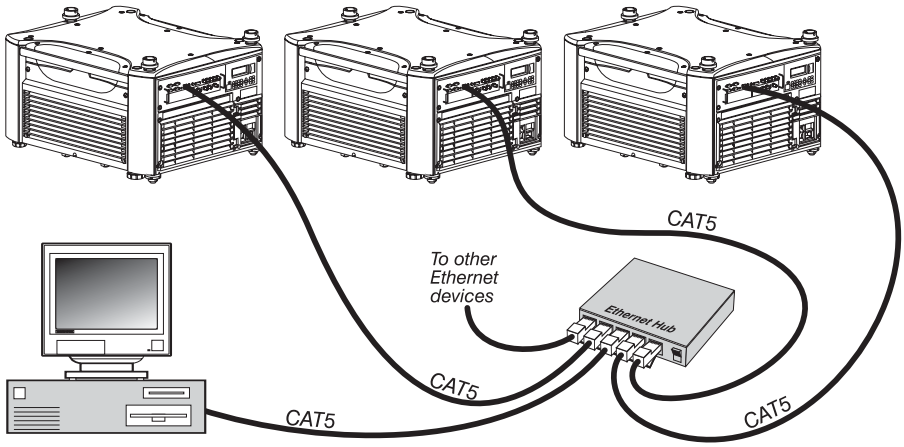

Figure 2.34. Typical Ethernet Network

SETTING THE PROJECTOR'S IP ADDRESS: Upon connection to most Ethernet networks, each projector's factory default IP address of 0.0.0.0 triggers the network's DHCP (Dynamic Host Configuration Protocol) server function to automatically assign an IP address that is valid and unique for use on that network. Depending on the network, this DHCP-assigned IP address usually remains stable for a single

session, but may change with subsequent power-ups and logins. On some networks, the address will remain stable from session to session. In all cases, the projector's IP address and port appear in the *Status* menu as well as the *Ethernet Settings* submenu. See Figure 2.35

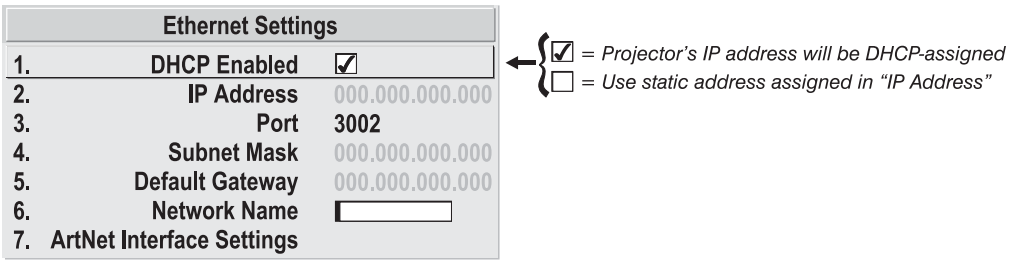

Figure 2.35. Setting the Projector's IP Address

Note that if a projector's IP address is anything *other* than 0.0.0.0 (shown as 000.000.000.000 in the *Ethernet Settings* menu) upon connection to an Ethernet network, or if DHCP is not available on the network, the automatic DHCP server function for supplying a valid and unique IP address to the projector is disabled. Instead, a specific and static IP address must be defined in projector memory—enter the new address in the *Ethernet Settings* submenu, or send to the projector via a serial command.. The IP address will be in effect until it is changed again, or until the DHCP checkbox is re-enabled for use with a DHCP server on the network.

NOTE: *Only the port and IP address of the projector can be changed. The subnet mask is fixed (255.255.255.0).*

CHANGING THE PORT#: On some Ethernet networks, firewall restrictions may require that the port number of the projector be changed from its default of 3002. If so, enter a new port number in the *Ethernet Settings* menu or include the new port# in an XIP serial command sent to the projector. It is highly recommended not to use a port# below 1000, as these ports are typically reserved for and used by common IP applications.

SUBNET MASK AND DEFAULT GATEWAY: The Subnet Mask and Default Gateway are automatically assigned when DHCP is enabled. If a static IP is being used, it must be assigned before the subnet mask. The Default Gateway is an optional router device used to send and receive data outside the subnet.

ArtNet INTERFACE SETTINGS: *Refer to* ***Section 3.6 – Adjusting System Parameters and Advanced Control, System Configuration – Communication*** *for additional information about ArtNet settings.*

Separating Networks

By default, communications originating from one type of serial controller—RS232 vs. RS422 vs. Ethernet—stay on the corresponding network path. A "Separate" setting indicates this separation for "Network Routing" in the *Communications* menu. If you are using an RS422 controller, for example, it will communicate only with the projector to which it is connected unless you change this setting to either "RS232 and RS422 Joined" or "All Joined" (Figure 2.36).

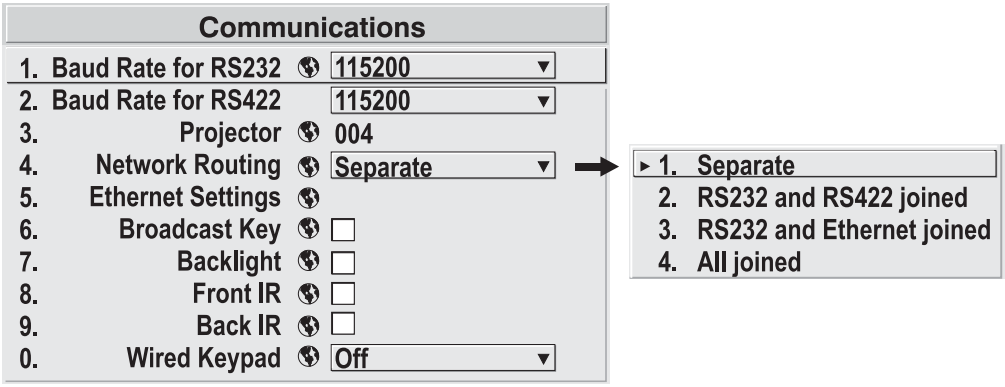

Figure 2.36. Keeping Communications Separate (default)

Communicating to All Ports

To relay all messages to all ports—RS232, RS422, and Ethernet—set the "Network Routing" option in the *Communications* menu for each projector to "All Joined". This configuration is useful if you are using a non-RS232 controller with the RS232 linking available between these projectors. For example, you may want to use both an RS422-compatible controller and an Ethernet-connected PC for working with a network of projectors linked via their RS232 in/out ports (Figure 2.37).

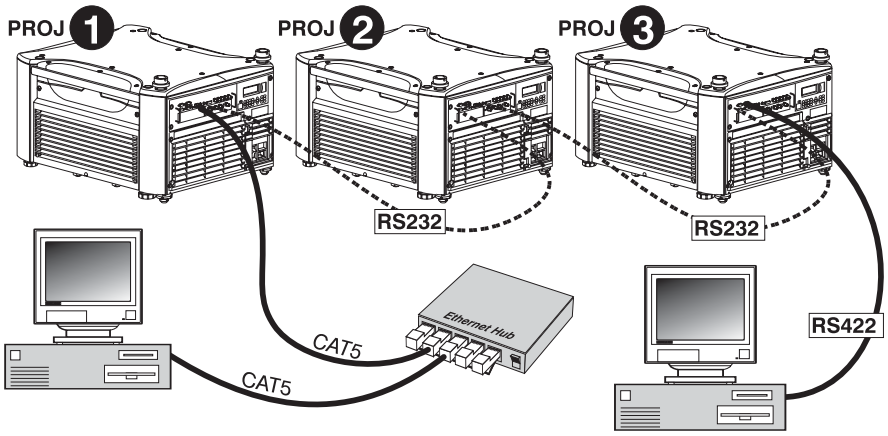

Figure 2.37. Joining All Networks

To isolate just RS422 communications, select "RS232 and Ethernet Joined". In Figure 2.37, only projector #3 will respond to the RS422 controller. To isolate just Ethernet communications, select "RS232 and RS422 Joined"—only projector #1 will respond via Ethernet.

2.7 Power Connection

⚠ The North American rated line cord is provided with each projector. Ensure that you are using a line cord that meets the appropriate rating standards (CCC for use in China, PSE for use in Japan).

Plug the projector's high-current line cord into the line input socket located in the lower right corner of the rear panel of the projector, then plug the 3-pronged end of the line cord into a grounded AC outlet. Make sure the socket outlet is installed near the equipment and is easily accessible. Input voltage to *all Roadster and Mirage S+* models must be capable of **200 –240** VAC. ***Use the proper power source and the high-current rated line cord provided.*** See ***Section 6, Specifications*** for all power requirements.

⚠ WARNING ⚠

Do not attempt operation if the AC supply and cord are not within the specified voltage and power range.

⚠ ***Caution for Shutdowns:*** *Once the projector is turned off (⏻), the lamp cooling fans will continue to run for approximately five minutes to ensure that the projector and lamp have sufficiently cooled, at which point the fans will automatically shut off. To avoid thermal stress that can lead to premature lamp failure,* ***never*** *unplug the line cord while the lamp cooling fans are running, and* ***never*** *unplug to power down.*

2.8 Operating Orientation

The projector is set up at the factory for use in a front screen, floor mount orientation. If your initial installation is ceiling mount or rear screen, displayed images may be upside down and/or reversed. To correct, you must change the image orientation from within the *Configuration Menu* (you may prefer to do this before physically installing the projector in its final position/orientation).

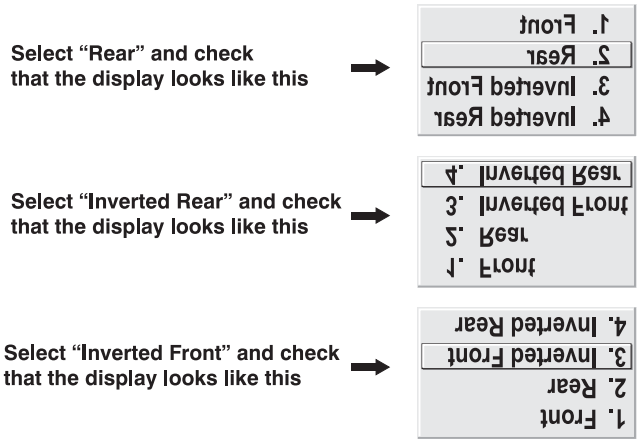

Figure 2.38. Image Orientation

In the *Configuration Menu* highlight and select the "Image Orientation" pull-down list. See Figure 2.38. Select from Rear, Inverted Rear, Front or Inverted Front according to your intended installation. See ***Section 3, Operation*** for further information.

2.9 Leveling

For most installations, the lens surface of the projector is parallel to the screen—this prevents major keystoning of the image (i.e., an image with non-parallel sides). In addition, the projector must be kept level from side-to-side in order for the lamp to function safely. To make small corrections to the projector's level, rotate each leg as necessary to raise or lower. See Figure 2.39. For angled installations, see *"Special Mounting"* under ***2.3, Projector Position and Mounting*** earlier in this section.

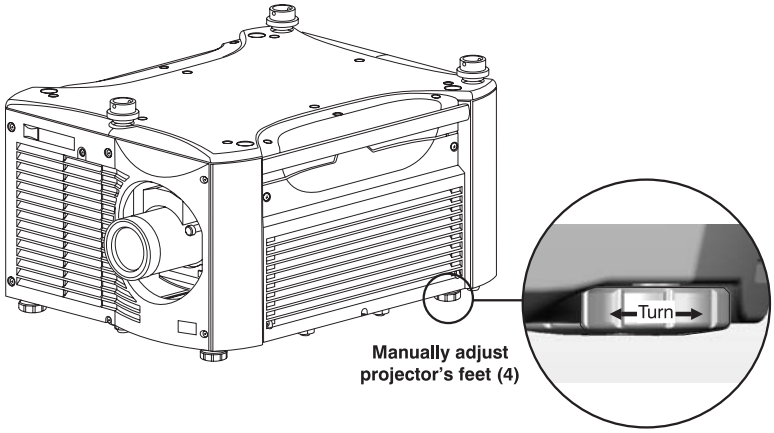

Figure 2.39. Adjusting the Feet Height

2.10 Zoom, Focus & Lens Offset

Once the projector is properly set up and producing an image, you are ready to make quick lens adjustments. Refer to ***3.3, Using the Keypads*** and ***3.4, Navigating the Menus*** if you are unfamiliar with using the keypad and menu system.

Lens Adjustments

NOTE: *Not applicable to fixed lenses. Focus fixed lens by turning focus ring on lens.*

Zoom ' With the input image displayed:

- If remote keypad: Press Zoom ◀ or ▶.
- If built-in keypad: Press Zoom ▲ or ▼.

Hold the key down to see the effect –arrows in the display indicate the direction of the zoom (Figure 2.40).

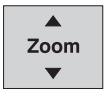

Figure 2.40

Focus With the input image displayed:

- If remote keypad: Press Focus ◀ or ▶.
- If built-in keypad: Press Focus ▲ or ▼.

Hold the key down to see the effect – arrows in the display indicate the direction of the focus (Figure 2.41).

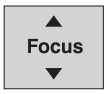

Figure 2.41

- • ***LENS OFFSET:*** To move the image:
  - If remote keypad: Press either Lens H ◀ ▶ or Lens V ▲ ▼ (Figure 2.42).
  - If built-in keypad: Press Lens Shift and use the arrow keys.

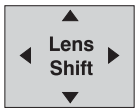

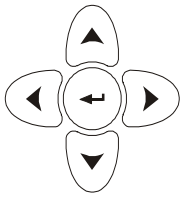

Figure 2.42

2.11 Keypad Protocols and Conversion

Both styles of remote IR keypads—ergonomic or "brick" rental staging—can be converted to a wired remote by adding the appropriate cable (provided). This is most useful for simple applications in which it is impractical to communicate via IR, such as when the projector is in another room and cannot respond to an IR signal, or when you wish to connect to and control individual projectors within a group.

Sample Keypad Cable

To control the projector when signals from a remote keypad cannot reach the projector, use the projector's built-in keypad. The nearby LED display provides feedback indicating current status and activities of the projector. Because the built-in keypad has fewer keys than the remote keypad, certain projector functions are accessible only through the menu system rather than via a direct key.

NOTE: *The built-in keypad cannot be disabled*

In addition, the rental staging keypad typically used with *Roadsters* can operate under a variety of different IR *protocols*, useful in multiple-projector sites where you prefer the tetherless freedom of controlling many adjacent projectors independently. When Keypad A operates under a different protocol than Keypad B (or others), each keypad communicates *only* with the projector(s) having a matching protocol defined in memory. See below.

Ergonomic Keypad

This style of keypad offers one protocol (A) only, and can be converted for wired use as follows:

1. Using the built-in keypad, display the *Communications* menu and choose the wired keypad option.
2. Then, connect the remote IR keypad to the phono jack input labeled **REMOTE** on the projector's input panel.

"Brick" Rental Staging Keypad

NOTES: 1) *Typically used for* ***Roadsters****.* ***2)*** *Protocols B-G described here require main projector software v1.2d or higher.*

At manufacture, this remote keypad is assigned "A" as its default protocol, which is simply a collection of settings that determines how the IR keypad operates. Once assigned, a protocol remains in effect until it is changed—that is, a remote keypad will operate as it currently does until you change its protocol. Each rental staging remote can operate using one of 7 different IR protocols, or it can be set to a "wired" protocol for use when a cable connects the remote to the projector. Change protocol via "hard-wired" jumper settings inside the keypad, set projector software to match, and add or remove the keypad cable as necessary.

NOTE: *Match the protocol on the projector to that of a keypad by accessing the* ***Communications*** *submenu. See* ***3.8, Adjusting System Parameters and Advanced Controls*** *for further information on how to define which protocol the projector's infrared sensors (rear and front) will recognize.*

Setting the Protocol

To convert the *Roadster* "brick" style of keypad from IR to wired use (or vice versa), set its protocol accordingly—see below.

Step 1

Unlatch and open the battery compartment on the back of the keypad as shown in Figure 2.43.

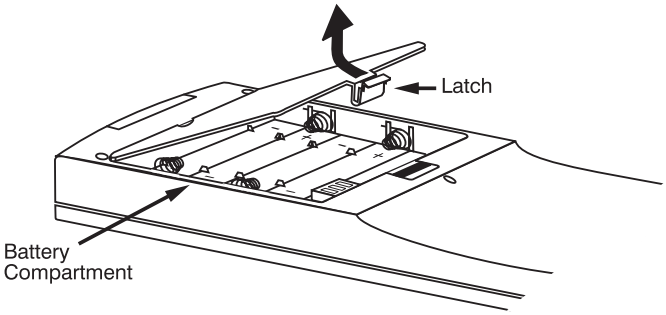

Figure 2.43. Opening the "Brick" Rental Staging Remote

Step 2

Find the 4 jumpers located along the latching side of the battery compartment. These jumper settings establish the remote keypad protocol so that the remote functions in a certain manner.

Step 3: Set the Jumpers

Set the jumpers to match one of the protocols shown in Figure 2.44. Use tweezers or needle-nose pliers to remove and replace each jumper as necessary.

- **J1** jumper: Set between 1 and 2 *or* 2 and 3 as required for the desired protocol.
- **J2** jumper: Set between 1 and 2 *or* 2 and 3 as required for the desired protocol.
- **J3** jumper: Set between 1 and 2 *or* 2 and 3 as required for the desired protocol.
- **J4** jumper: For IR use, *always* set between pins 1 and 2 (see A-G below).

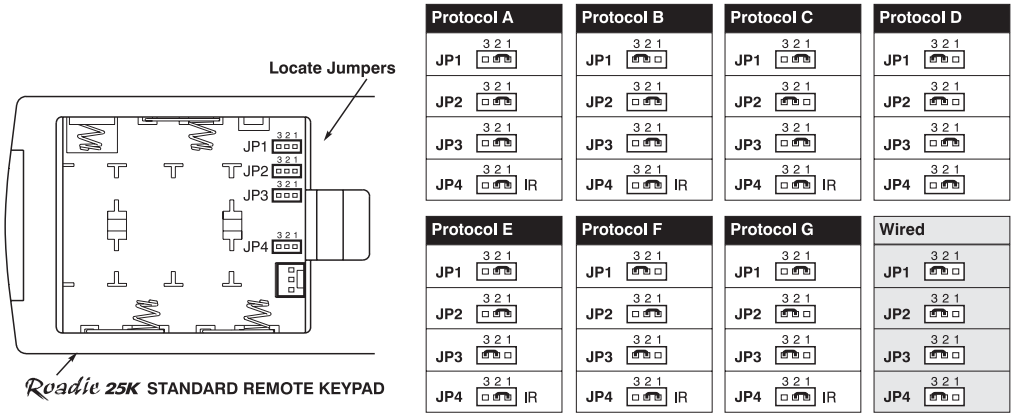

Figure 2.44. Setting the Jumpers in the "Brick" Rental Staging Remote

NOTE: *Protocols B-G require v1.2d (or higher) software.*

Step 4

Plug in the keypad cable (if jumpers are set for wired use) and replace the battery compartment cover. Plug into projector (wired keypad only) and test.

NOTE: *If you change any keypad to a new protocol and the projector stops responding, the projector may be set to a conflicting protocol. Use the projector's built-in keypad to access the* ***Communications*** *submenu. Under "Front IR" or "Back IR", select the protocol that matches the new protocol of the keypad at hand. The projector should now respond properly.*

SHORTCUT METHOD:

Unlike older models of Christie projectors and keypads, there is no shortcut method for changing a keypad's protocol through a special sequence of keystrokes. Simply change the internal jumper settings as described above.

Converting a Rental Staging Keypad

If desired, you can convert this IR remote keypad into a wired remote keypad and vice versa. Set the jumpers as shown in Figure 2.44, and add or delete the cable (supplied) and batteries as required.

TO CHANGE FROM INFRARED TO WIRED:

1. Remove battery compartment cover from back of keypad.
2. Remove batteries.
3. Wait 1-2 minutes. Meanwhile, notch the battery cover to create an exit hole for the cable. Make sure hole is smooth and will accommodate the cable without pinching.
4. Plug the keypad cable (supplied) into the empty battery compartment—make sure to orient the connector correctly (red wire nearest to the edge).
5. Set keypad protocol to "wired" jumper setting (refer back to Figure 2.44). Make sure to set jumper #4 between pins 2 and 3 as shown in the last example (shaded).
6. Replace battery compartment cover, keeping the strain relief tie just inside the battery compartment at the exit notch.
7. Plug into the port labeled **REMOTE** on the projector's input panel.

TO CHANGE FROM WIRED TO INFRARED:

1. Unplug the keypad from the projector.
2. Open the keypad back and unplug the keypad cable.
3. Wait 1-2 minutes.
4. Install batteries (see ***Section 4***)
5. Set jumpers according to the desired IR protocol (refer back to Figure 2.44). Make sure to set jumper #4 between pins 1 and 2 as shown for all remote IR protocols.
6. Replace battery compartment cover.

Section 3

Operation

3.1 Overview

This section explains how to use the projector once it has been installed. Please read through these pages before using the projector for the first time. An understanding of projector features and how to access them will help you to take full advantage of the capabilities of the projector within minutes.

NOTE: *Installation involves locating the projector and adjusting it for use at that location. If you have not yet installed the projector, refer to* ***Section 2, Installation and Setup****.*

3.2 Projector Basics

Most projector functions and adjustments are initiated via keypad commands that either control the projector directly or activate a system of intuitive menus. Collections of settings can be defined and retained in the projector's internal memory as a custom *channel,* with up to 50 different channels possible.

Projector components and functions are illustrated below (Figure 3.1). Refer back to the chart on page 1-2 for additional differences between models.

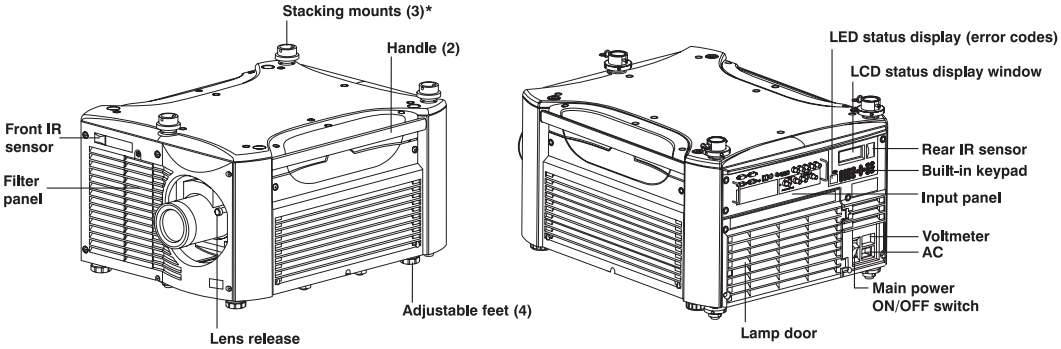

Figure 3.1. Basic Projector Components

Components / Features

Zoom

Operated with the keypad, the internal optics of a motorized zoom lens rotates to adjust the size of the image without moving the projector. Minimum and maximum image sizes depend on which zoom lens is installed. See *Section 5, Specifications.*

Lens Release

Push lens release to enable the lens to be rotated for removal.

Focus

Operated with the keypad, focus adjusts the sharpness of the image at the current throw distance.

Lens Offset

Operated with the keypad, vertical and horizontal offsets shift the lens and move the image up or down and left or right. See ***Section 2, Installation and Setup*** and ***Section 6, Specifications*** for ranges and other details.

Shutter and Iris

NOTE: *Iris is not available on Roadster S+ 20K.*

Operated with the keypad, closing the internal shutter blocks the lens internally and turns the image to off (black). Enlarge the diameter of the iris—a.k.a. *optical aperture*—for optimized brightness; reduce the diameter to optimize contrast ratio.

Eyebolts

- 2 eyebolts on bottom (factory-installed)—for attaching safety cables when hoisting inverted projectors.
- 4 eyebolts for top (separate)—for non-inverted hoisting.

NOTE: *2 additional safety eyebolts required.*

Handles

For brief hand transport only. Not used for hoisting, rigging, or as safety points.

Stacking Mounts / Stacking Legs

NOTE: *Optional on Mirage S+.*

For stacking up to 3 projectors. See ***Section 2*** for details.

⚠ WARNING ⚠

Use Christie stacking mounts only.

Adjustable Feet

Turn the 4 adjustable feet to increase or decrease height and/or tilt as needed. For most installations the projector will likely be slightly inclined to match the screen tilt – this reduces the amount of vertical offset required. See ***2.3, Projector Position and Mounting***

Filter Door

The filter door is a louvered grille for air intake. Remove to access and replace air filter.

Lamp Door

The lamp door is a louvered grille for accessing and replacing the lamp module.

NOTE: *Lamp replacement requires a qualified service technician.*

Input Panel

The input panel wires the projector to inputs (sources) and controllers such as PCs.

- **COMPOSITE/S-VIDEO INPUT -** Accepts a composite video, DVI and S-Video signal from devices such as VCRs.
- **RGB INPUT -** Accepts RGB and sync signals from devices such as computers, as well as composite video, S-Video or YPbPr component signals.
- **RS232 SERIAL INTERFACE (WITH LOOP THROUGH) -** Allows one or more projectors to be remotely controlled by a computer or controller,
- **RS422 INTERFACE -** Allows one or more projectors to be remotely controlled by an RS422 compatible computer or controller (such as the *Two-Way Controller* accessory).

AC Power Input and Monitoring

- ⚠ **AC LINE CORD INPUT -** Use the AC supply specified, and ***always use the line cord provided with the projector. See Section 5.*** Before unplugging, wait until the main blower turns off or the LCD status reads *Power Off*.

Model	AC Power Specifications
Roadster S+12K	200-240 VAC, 50-60 Hz, max. 15 amps @ 200VAC
Roadster S+16K	200-240 VAC, 50-60 Hz, max. 20 amps @ 200VAC
Mirage S+14K	200-240 VAC, 50-60 Hz, max. 20 amps @ 200VAC
Roadster S+20K	200-240 VAC, 50-60 Hz, max. 25 amps @ 200VAC

⚠ WARNING ⚠

Do not attempt operation if the AC supply is not within the specified voltage and power range. Use the specified line cord.

- **VOLTMETER -** Displays incoming voltage level reaching the projector.

- **SWITCH/BREAKER -** The breaker on the rear panel serves two purposes: **1**) It is a power switch for the ballast **2)** It protects against excessive AC conditions (15A or more for *Roadster S$^+$12K* 20A or more for *Roadster S$^+$16K/Mirage S$^+$14K*, and 25A or more for *Roadster S$^+$ 20K*). If the projector is faulty or excessive AC is detected, the breaker will "trip" to OFF in order to prevent damage. Try moving the breaker ON again - if the breaker continues to trip OFF, this indicates a major fault and the AC problem must be resolved. Possible causes might include shorts, damage to lamp cables, or excessive AC.

NOTE: *This switch powers only the ballast—it does not power up the projector or start the lamp. You must press* ⏻ *on the keypad.*

Two Status Displays:

- **2-DIGIT STATUS/ERROR CODE WINDOW -** This LED (light emitting diode) display is adjacent to the built-in keypad. During normal operation, the "Power" light is steady yellow and indicates "on". When the status of the projector changes, the LED displays a 2-digit code number representing the projector's new status. In addition to the numeric readout, there are two decimal points in the display: the right decimal point flashes when the projector *receives* a command, and the left point flashes when the projector *sends* a command.

- **LCD STATUS DISPLAY WINDOW -** Displays a text message describing the current system status (such as an error). During normal operation, this display indicates Power On and includes the frequencies of the vertical and horizontal syncs. The display also shows if the On Screen Display (OSD, or menu system) is on or off. The LCD displays the message Power Off when the breaker is on but the lamp is off.

Keypads / Sensors

- **WIRED REMOTE KEYPAD CONNECTOR -** For optional tethered remote control of the projector.
- **BUILT-IN KEYPAD -** Alternative location for working with the projector.
- **INFRARED SENSORS -** The infrared (IR) sensors on the front and rear of the projector receive infrared signals from the IR keypad for remote control of projector functions. For proper operation, make sure that these sensors are not blocked.

3.3 Using the Keypads

Using one of the following keypads typically controls the projector:

- ***Built-in Keypad*** at the rear of the projection head
- ***Remote Keypad*** for tethered or tetherless control (includes cable for connecting as a wired remote)

While each of the keypads provides complete control of the projector, they differ slightly in their arrangement of keys and in which functions can be accessed directly with a key press rather than requiring use of the menu system. You may find one keypad more convenient than another for your specific installation and application.

Built-in

To control the projector when signals from a remote keypad cannot reach the projector, use the projector's built-in keypad (Figure 3.2). Two nearby status windows provide feedback indicating current status and activities of the projector. Because the built-in keypad has fewer keys than the remote keypad, certain projector functions are accessible only through the menu system rather than via a direct key.

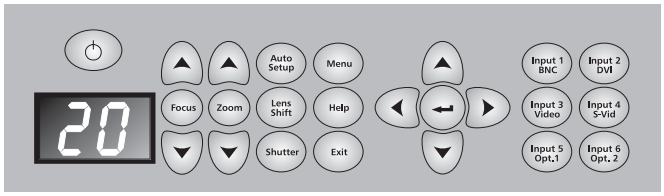

Figure 3.2. Built-in Keypad at Projector Rear

NOTE: *The built-in keypad cannot be disabled*

IR Remote

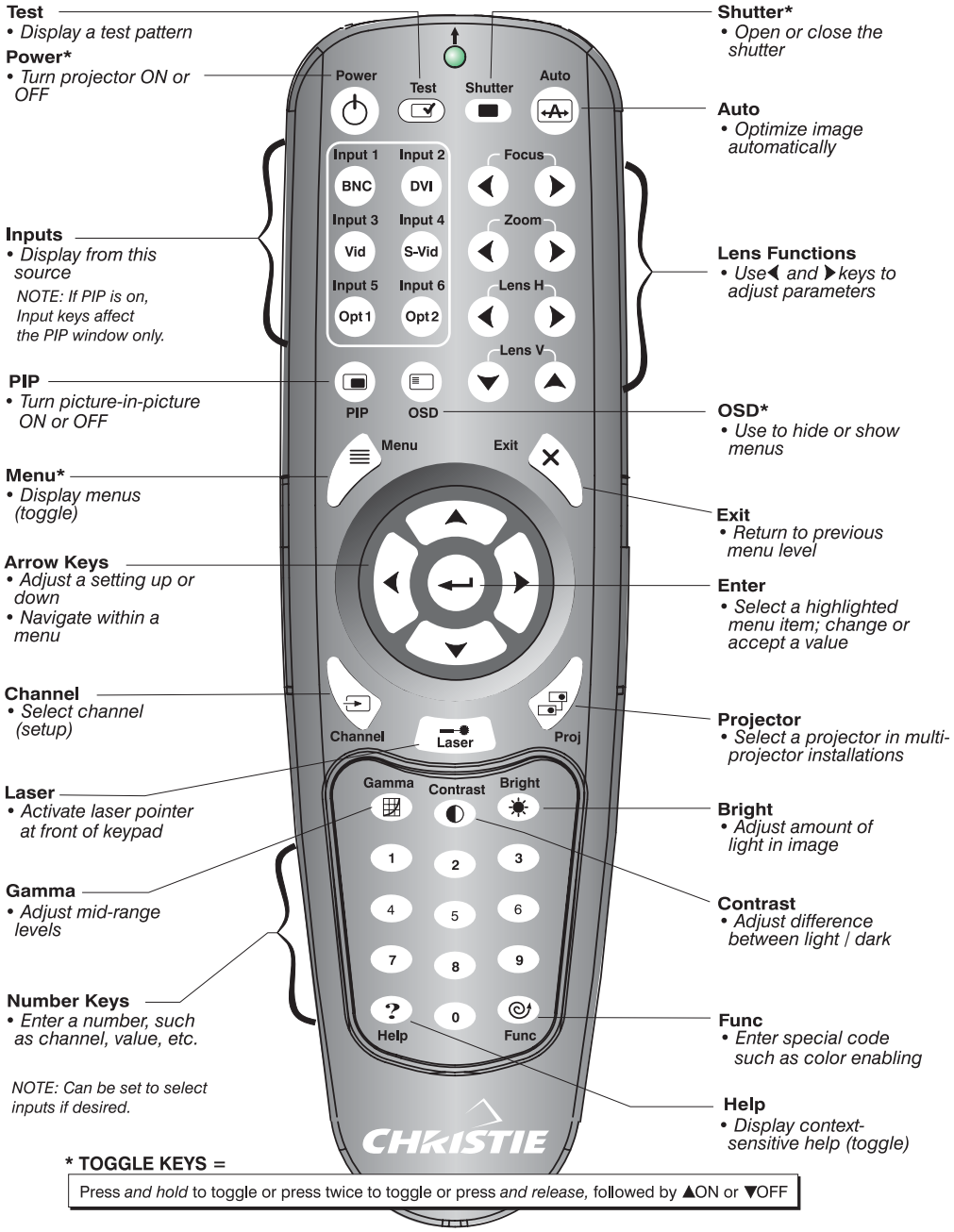

Figure 3.3. Remote Keypad

An IR remote keypad controls the projector by way of wireless communications from a battery-powered infrared (IR) transmitter. Use the IR remote keypad the same way you would use a remote keypad supplied with a TV or VCR. When making key presses, direct the keypad either toward the screen or toward the front or rear IR sensors on the projector.

NOTE: *For improved reception, use an optional remote IR sensor to route the signal via a phone cable plugged into the wired keypad port.*

The "brick" style rental staging IR remote, typically used with *Roadster* models, is shown in Figure 3.4. It has no laser pointer, but includes 3 additional keys: the *Swap* key for use with PIP functions, *Backlight* key for lighting keys, and direct *Input* key used with the numbered keypad to switch from one input to another.

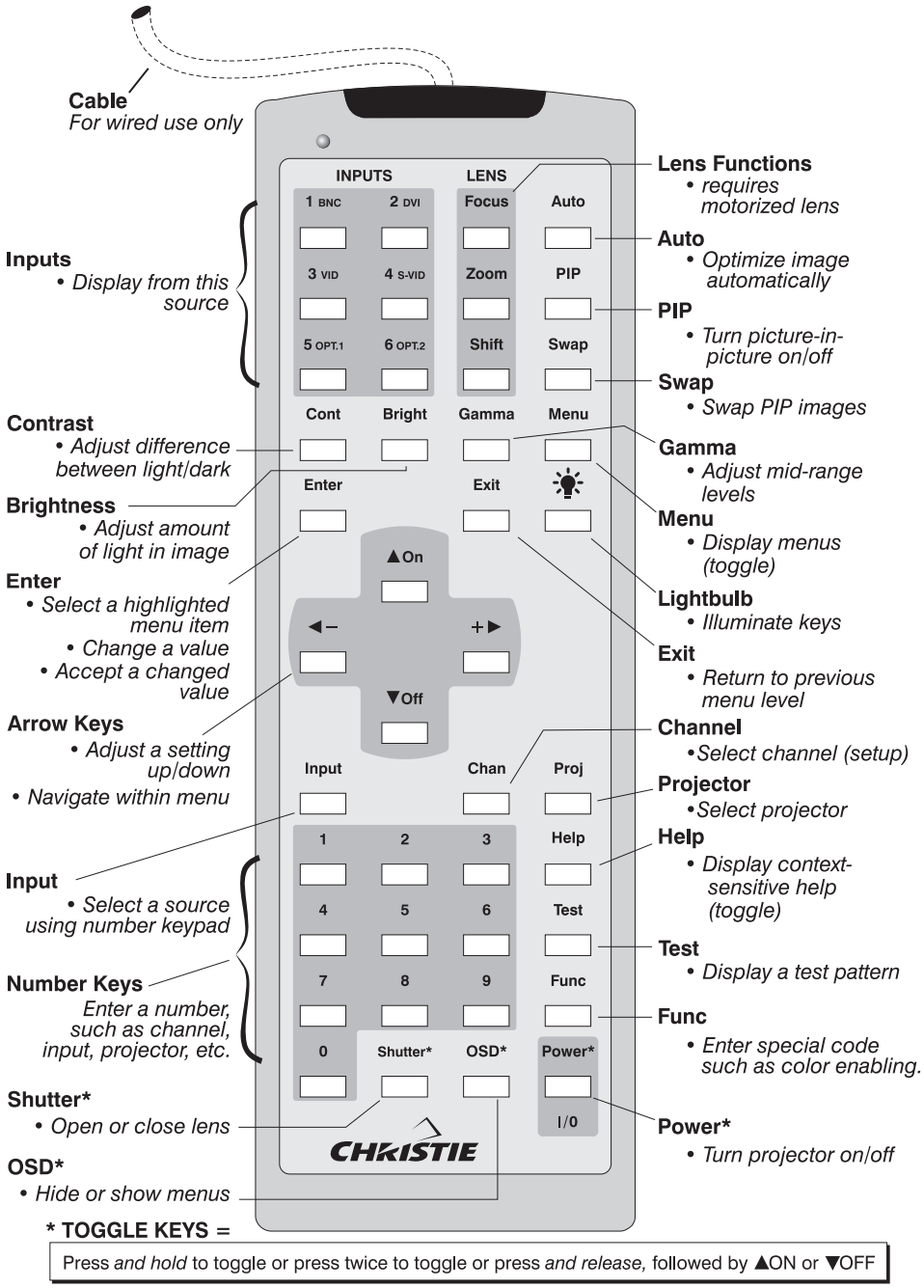

Figure 3.4. "Brick" Rental Staging Remote Keypad (Roadster)

Wired Remote ' With the addition of a cable (supplied), the IR remote converts into a wired remote keypad. Simply connect to the **REMOTE** input at the rear of the projector. The wired remote is recommended when the rear built-in keypad is inaccessible or if lighting conditions are interfering with IR transmission.

NOTE: *Batteries must remain in the remote to use the laser feature.*

Guide to Keypads '

1) Press keys one-at-a-time; there are no simultaneous key combinations required.
2) Note that three keys—Power, Shutter and OSD—are "press-and-hold" keys that do not function with a typical quick press-and-release keypress (see Figure 3.3).

3) Hold arrow keys down for continuous adjustment/movement in one direction. In serial networks, pause briefly between adjustments to ensure that more distant projectors can "keep up" with the commands.
4) If you press a key while the projector is still responding to the previous action, such as during power-up, the second key press may not take effect.

Keypad Commands

Specific keypad commands are explained below:

Power ON/OFF

Press and hold briefly to toggle the projector on or off with a single keystroke. Or press and release followed immediately by (on) or (off) to guarantee the correct toggle (useful if you are unsure of the present state).

NOTES: 1) *After powering down, the lamp cooling fan remains on for approximately 5 minutes to cool the lamp.* ***2)*** *It is a good idea to avoid turning a projector back on until it has been off for several minutes. Hot re-strikes of the lamp may reduce lamp life.*

Test

Press Test to scroll through the projector's internal test patterns. When a test pattern is up, use to scroll through the patterns without going back to the input.

Auto

Press Auto Setup to initiate an automated process in which the projector optimizes critical display parameters such as size, position, pixel tracking, etc., for the current unlocked channel. These parameters are listed in Table 3.1. An *Auto Setup* can save time in perfecting a display, and you can further modify the settings as desired.

Table 3.1. Auto Setup

What an "Auto Setup" Does	
OPTIMIZES:	***SETS TO DEFAULT:***
Pixel Tracking	Contrast
Pixel Phase	Brightness
Size and Blanking	Auto Input Level (off)
Vertical Stretch	Detail *(if video source)*
Position	Filter
Input Levels	Luma Delay

Channel

Press Channel to select a specific source setup (*channel*) defined and stored in projector memory. Once you enter a 2-digit channel number (or, if there is a list displayed, highlight it and press), the display will automatically change and update according to the numerous setup parameters defined for that channel. Note that a new channel is automatically created if you adjust an image from a new source.

NOTE: Channel (Channel) key behavior *during a presentation depends on whether or not the* ***Display Channel List*** *option is enabled in the* ***Menu Preferences*** *menu. You can choose to use a scrollable list of channels when you press* Channel*, or you may prefer to enter the desired channel number "blind", i.e., without on-screen feedback. See* ***Menu Preferences*** *later in this section.*

Input 1

Press Input 1 to display from the data input source connected to BNCs labeled **INPUT 1.** If PIP is enabled, pressing this key will change the PIP source.

Input 2

Press Input 2 to display from the DVI source connected to **INPUT 2**. If PIP is enabled, pressing this key will change the PIP source.

Input 3

Press Input 3 to display from the composite video source connected to **INPUT 3**. If PIP is enabled, pressing this key will change the PIP source.

Input 4

Press Input 4 to display from the S-video source connected to **INPUT 4**. If PIP is enabled, pressing this key will change the PIP source.

Input 5

Press Input 5 to display from the **INPUT 5** interface module installed in the Option 1. If PIP is enabled, pressing this key changes the PIP source. If there are two inputs connected here, such as if the Dual SD/HD-SDI is installed, the second input (B) is considered **INPUT 7.** Press **INPUT 5** to access **INPUT 7** as follows:

- While displaying from **INPUT 5**, press Input 5 again. This switches to **INPUT 7**.
- While displaying from any input *other* than the *Dual SD/HD-SDI Module*, press Input 5. This switches to either **INPUT 5** or **INPUT 7**, depending on which of the *Dual SD/HD-SDI Module* inputs (A or B) was last used. Press Input 5 again to display from the other *Dual SD/HD-SDI Module* input.

Input 6

Press Input 6 to display from the **INPUT 6** interface module installed in the Option 2. If PIP is enabled, pressing this key changes the PIP source. If there are two inputs connected here, such as if the Dual SD/HD-SDI is installed, the second input (B) is considered **INPUT 8**. If you are using the built-in keypad or the remote keypad, press **INPUT 6** to access **INPUT 8**as follows:

- While displaying from **INPUT 6**, press Input 6 again. This switches to **INPUT 8**.
- While displaying from any input *other* than the *Dual SD/HD-SDI Module*, press Input 6. This switches to either **INPUT 6** or **INPUT 8**, depending on which of the *Dual SD/HD-SDI Module* inputs (A or B) was last used. Press Input 6 again to display from the other *Dual SD/HD-SDI Module* input.

Input ' Input

NOTE: *Available on "brick" rental staging keypad only.*

Enter Input *n* (where *n* = 1, 2, 3, 4, 5, 6, 7 or 8) as an alternative method for selecting which source to display. Six source locations are identified with input numbers on the projector's input panel. The last two, 7 and 8, require the *Dual SD/HD-SDI Module* installed in either of the option slots.

If PIP is enabled, Input n changes the PIP (secondary) image source, and Input PIP n changes the main (primary) image source.

NOTE: *Input key behavior depends on whether or not the* ***Display Channel List*** *option is selected in the* ***Menu Preferences*** *menu. You can choose to have on-screen feedback when you press Input, or you may prefer to enter the desired source location "blind", i.e. without on-screen feedback. See* ***Menu Preferences****.*

Bright — *Brightness*

Press Bright to increase or decrease the amount of black in the image. Use ◀ ▶ keys until you reach the desired level of contrast—for best results, start high and decrease so that dark areas do not become black (i.e., "crushed"). Conversely, overly high brightness changes black to dark gray, causing washed-out images. See ***3.6, Adjusting the Image*** *(Image Settings* subsection).

NOTE: *Always adjust brightness before contrast.*

Contrast — *Contrast*

Press Contrast to change the amount of white in your images. Use ◀ ▶ keys until you reach the desired level of contrast—for best results, start low and increase so that whites remain bright but are not distorted or tinted, and that light areas do not become white (i.e., "crushed"). Conversely, low contrast causes dim images. See ***3.6, Adjusting the Image*** *(Image Settings* subsection).

Gamma — *Gamma*

NOTE: *This is the same as "****Gamma****" in the* ***Image Settings Menu****.*

"Gamma" determines what gray shades are displayed between minimum input (black) and maximum input (white) for a given amount of signal. The proper setting helps maintain optimized blacks and whites while ensuring a smooth transition for the "in-between" values utilized in colors and grays. Thus, unlike brightness and contrast settings controls, the overall tone of an image can be lightened or darkened without changing the two extremes, and your images will be more vibrant yet with good detail in dark areas.

The normal gamma setting of 2.2 is correct for most signals and conditions. If excess ambient light washes out the image and it becomes difficult or impossible to see details in dark areas, lower the gamma setting to compensate. This will improve contrast ratio while maintaining good details for blacks.

Menu — *Menu*

Press Menu to enter or exit the projector's menu system.

OSD — *OSD (On-screen display)*

Press OSD ▼ to hide the projector's menu system during use. To see the menus again, do one of the following:

- Press <u>*and hold*</u> OSD briefly
- Press and release followed immediately by ▲
- Press OSD OSD

Invisible menus are fully functional, enabling "hidden" access to numbered features and image adjustments by entering the corresponding sequence of keypresses on the keypad.

NOTES: 1) *With OSD "on", you can still hide error messages and slidebars by disabling these options in the* ***Menu Preferences*** *menu.* ***2)*** *The state of the on-screen display appears in the LCD window at the rear of the projector.*

(PIP) PIP

Press (PIP) to enable and disable Picture-in-Picture. PIP enables you to display two different images simultaneously – typically a smaller "secondary" image within a large "primary" background. When a menu control or slidebar is present, press (PIP) to toggle the current function to affect the other image.

NOTE: *Disable PIP and Best Switching for Interlaced sources > 35 kHz.*

[Swap] Swap

Press [Swap] to swap the current picture-in-picture relationship so that the primary image becomes secondary, and the secondary image becomes primary.

NOTES: 1) *This key is available on the "brick" rental/staging remote only. Alternatively, a swap can be accessed in the menu system.* ***2)*** *Requires PIP.*

(Shutter) Shutter

Press *and hold* (Shutter) briefly to toggle the internal mechanical shutter blade closed or open with a single keystroke. Or press and release (Shutter) followed immediately by (▲) (shutter on; closed) or (▼) (shutter off; open) to guarantee the correct toggle (useful if you are unsure of the present state). Alternatively, press (Shutter) (Shutter) to toggle from the present on/off state. A closed shutter blanks the display (turns it to black). Close the shutter to mute all display while maintaining access to projector functions. Opening the shutter restores the image.

NOTES: 1) *The status of the shutter is shown in the LCD display window at the rear of the projector.* ***2)*** *The shutter is open upon power-up.*

(Func) Function Key

IF WITHIN A MENU: Using the (Func) for special tasks within the menu system is noted with the appropriate topic elsewhere in *Section 3*. For example, press (Func) in the *Channel Setup* menu to enable deletion or copying of a channel.

IF WITHIN A PRESENTATION: Press (Func) followed by a 2-digit number to enable a specific color or colors in the display (see right). For example, (Func)(6)(4) will display only red and green data, (Func)(6)(7) will display all color data. Eliminating one or more colors can help with certain diagnostics and setups, such as when accurately overlaying one image on top of another when stacking projectors.

(Func)(6)(1) = Red
(Func)(6)(2) = Green
(Func)(6)(3) = Blue
(Func)(6)(4) = Red & Green
(Func)(6)(5) = Green & Blue
(Func)(6)(6) = Red & Blue
(Func)(6)(7) = All Colors

DEFINING OTHER USES: Through ASCII messaging on a PC, you can also create special user functions for keys 1 – 5 and 7 – 9 and others. For example, (Func) can be programmed to trigger RTEs (Real Time Events) or to display custom menus. Refer to the separate *Christie Serial Communications* publication.

(Proj) *Projector*

Press (Proj) to access a specific projector within a group of projectors or to confirm if the local projector is listening. The number in the "Enter Number" window indicates which projector is currently listening to commands, and will match the projector number that has been defined in the *Menu Preferences* menu.

The "Projector" checkbox (read-only) shows whether or not the projector physically connected to a keypad is listening to commands from that keypad. A checkmark means that connected projector is listening; if there is no checkmark, you are communicating with a different projector.

To control a specific projector with the keypad, enter the 3-digit number assigned to the projector you want to use. If you switch to a projector other than the one you are currently using, the checkmark will disappear.

To broadcast to multiple linked projectors, press (Proj) and then (Proj) again ***without*** entering a projector number. Keypad commands will then affect all projectors in the chain.

NOTE: *The "Broadcast Keys" option in the Communications menu must be selected for only* ***one*** *(any) projector in a serial network. The keypad in use must be OFF (disabled) for the remaining projectors. See also* ***2.14 Remote Keypad Protocols and Conversion****, and* ***3.7, Adjusting System Parameters and Advanced Controls.***

(↵) *Enter*

Press (↵) to select a highlighted item, to toggle a checkbox, or to accept a parameter adjustment and return to the previous menu or image.

(Exit) *Exit*

Press (Exit) to return to the previous level, such as the previous menu.

NOTE: (Exit) *does not save changes within text editing boxes (including number editing of a slidebar value) or within pull-down lists. It acts as a "cancel" in these cases.*

Arrow Keys

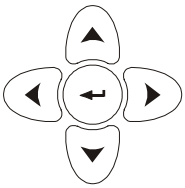

Use the (◀) (▶) keys to change a slidebar value or to select a different option within a pull-down list without having to first scroll through options. These keys also jump to the next page in long menus. See also *Editing Text* later in ***Section 3***.

Use the (▲) (▼) keys to navigate within a menu, pull-down list or text box. Use in combination with power, shutter and OSD keys to force the corresponding state. See details provided on the back of the remote keypad.

(Focus), (Zoom), (Lens H), (Lens V) *Lens Focus, Zoom and Lens H, Lens V*

Use (Focus), (Zoom), (Lens H), (Lens V) and (Lens Shift) with their corresponding arrow keys to adjust the lens for optical sharpness, size, and position. Note the (Zoom) requires a zoom lens.

***NOTES**: **1)** The (Lens Shift) key, when combined with (◄) (►) (▲) (▼) keys on the built-in keypad is the same as using the (Lens V) and (Lens H) keys on the remote. **2)** On the "brick" rental staging keypad, use the 3 lens keys with the arrow keys.*

Laser

***NOTE:** Not available on the "brick" rental staging keypad.*

Press (laser) to activate the laser pointer, and direct the remote at the screen to highlight an area with a light beam (dot). The closer you are to the screen the brighter the laser beam appears. The laser pointer works best with reduced ambient lighting.

Backlighting

***NOTE:** "Brick" rental staging keypad only.*

Press the "lightbulb" key to illuminate the keys on the remote without sending a command to the projector.

3.4 Navigating the Menus

Most of the controls for the projector are accessed from within the projector's menu system. There are several groups of related *functions*, with each group selectable from the *Main* menu as shown at right. Press (Menu) at any time to display this *Main* menu. Figure 3.5.

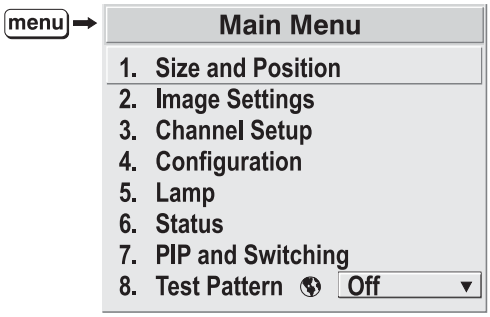

Figure 3.5. Entering the Menu System

On the remote keypad, either enter the number corresponding to the function menu you wish to access, such as (2) for the *Image Settings* menu. Or use the (▲) (▼) keys on any keypad to highlight the desired option, then press (↵). The corresponding function menu or pull-down list of further options will then appear.

With a function menu displayed, navigate in a similar manner—enter a menu option number for any numbered option, or use the (▲) (▼) keys to highlight the desired option, then press (↵) (Enter). Extra long menus have a scroll bar on the right—use the arrow keys to access the remainder of the menu. Locked items or items that do not pertain to the current action or condition appear dimmed and cannot be selected.

***NOTES: 1)** If there is no signal present, all source-dependent adjustments are disabled. **2)** After 15 minutes of inactivity, the projector leaves the menu system and returns to the presentation. **3)** The **Status** menu is read-only.*

When finished with a function menu, do one of the following:

- Press (Exit) to return to the previous screen
- Press (Menu) to leave the menu system and return to the presentation

On-line Help

If at any time you are uncertain what to do next, press (Help) to display summary information about the current menu or highlighted option. Press (Help) again to exit. In addition, a line of "hint" text is included at the bottom of some menus. Figure 3.6.

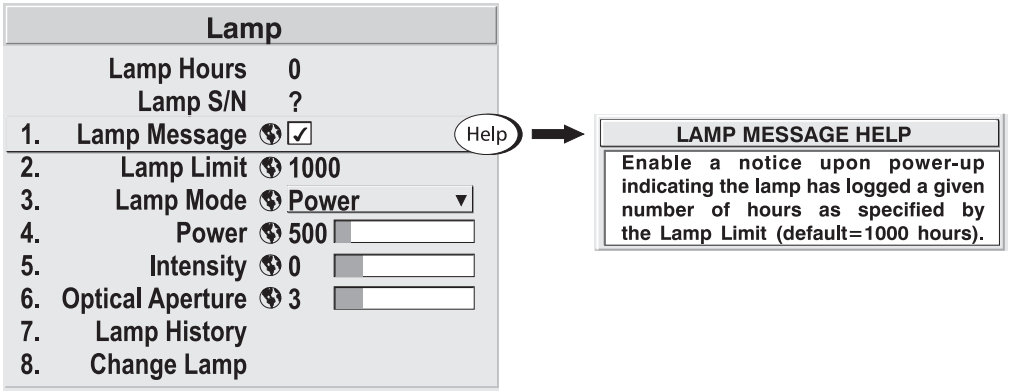

Figure 3.6. Context-sensitive Help

From presentation level, press Help to access general *Help Topics* (Figure 3.7). Scroll as necessary within a topic. Press Help or Exit to return to your presentation.

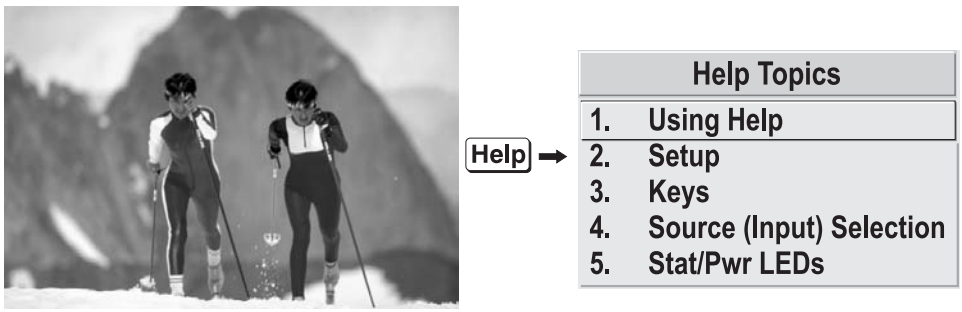

Figure 3.7. Accessing General Help Topics

Time-outs ' If a slidebar, menu, or message is displayed, you have limited time in which to make a keypad entry before the projector returns to presentation level Help and the graphic disappears. These time-outs may vary depending on what is displayed.

The Global Icon ' Menu options that include this icon apply universally to any incoming signal.

The PIP Icon ' Menu options that include this icon apply to PIP (secondary) images only.

Using Slidebars And Other Controls ' Most of the function menus allow you to change settings by using slidebars, checkboxes, and pull-down lists. To select a slidebar, toggle a checkbox status, or view a pull-down list, do one of the following within the function menu:

- Enter the menu option number corresponding to the setting you wish to change (for example, press 1 3 from the main menu to select Vertical Stretch in the *Size & Position* menu).
- Or move the highlight to the option desired and press ↵ (Enter).
- Or move the highlight to the option desired and press ◄ ► to adjust immediately.
- Or bypass the menus entirely and use a single key to immediately access an adjustment during your presentation

  NOTE: *applies only to options having their own key, such as Contrast, Brightness, Gamma, etc.*

- For "blind" access, hide the entire menu system (see OSD key, above) and/or direct slidebars activated by their own key (such as Contrast, Brightness, etc.). Control by using the proper keypress or numerical sequence of key presses.
- When using PIP images, use PIP key to adjust the image.

Once selected, change the settings as desired (see below). Changes take effect immediately and are saved upon exit from all menus, or after 15 minutes.

Slidebars in menus – The current value for a given parameter, such as size or vertical stretch, appears to the left of its slidebar icon (adjustment window). This number often expresses a percentage, or it may have units associated with it (such as pixels, degrees Kelvin, etc.), depending on the specific option. Press ◄ ► to gradually adjust the setting up or down—both the number and the length of the bar change accordingly. Hold for continuous adjustment. Or press ↵ to activate a slidebar text box for specific number entry via the keypad, then press ↵ to save (or press Exit to cancel).

Filter 5

"Direct" slidebars - For quick access, you access Gamma, Brightness, and Contrast slidebars without traveling the menu system. For example, simply press Cont to immediately display the same contrast slidebar accessed with the **Contrast** option in the *Image Settings* menu.

Use the arrow keys to adjust a direct slidebar, or press ↵ and enter a specific number from the keypad, then ↵ or ◄ or ► to save (or Exit to cancel). When you are done, press Exit to return to your presentation.

NOTES: 1) *You can still adjust a direct slidebar as usual if the display is turned off (see* OSD *or* ***Menu Preferences*** *menu) — the slidebar just won't be visible.* ***2)*** *A direct slidebar disappears if it is not used within 5 seconds.*

Checkboxes - Conditions are present if its adjacent checkbox contains a checkmark. To toggle the checkbox, simply highlight and press ↵, or highlight and use ► to check and ◄ to uncheck. If a checkbox is numbered, simply enter its number to immediately toggle the checkbox.

Pull-down lists – To see a pull-down list of options available for a given parameter labeled with a ▼, you can:

- Highlight it and press ↵ (Enter)
- Or enter the menu option number.

Use ▲ or ▼ keys to navigate up and down within the list (the current choice is noted with a small '). Press ↵ to choose an option from the list, if desired (Figure 3.8).

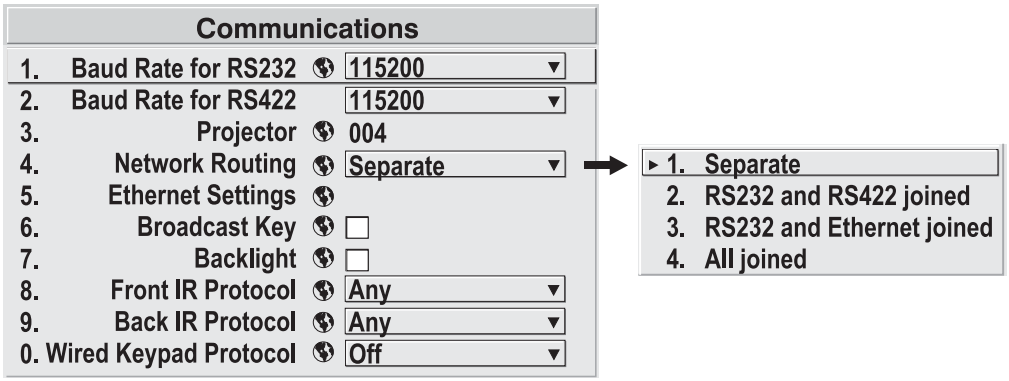

Figure 3.8. Example of Pull-Down List

NOTES: 1) *Press* ◀ or ▶ *to jump between pages in an extra long pull down list.* ***2)*** *Press* Exit *while in a pull-down list to* ***cancel*** *any change.*

Editing Text

ACTIVATE THE EDIT WINDOW: To enter or edit text, highlight the desired parameter (such as a channel name) and press ↵ to activate its adjacent edit window. Any previously entered text is displayed with its first character highlighted in a square cursor, signifying that this character is ready for editing. See Figure 3.9.

NAVIGATE WITHIN THE EDIT WINDOW: Press ▶ to move the cursor forward or ◀ to move the cursor backwards as desired.

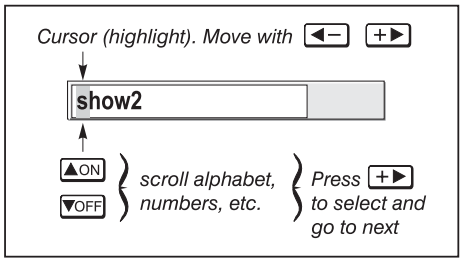

Figure 3.9. Entering Text

EDIT A CHARACTER: To edit a highlighted character, use ▲ and ▼ to scroll through the alphabet, numbers, spaces and punctuation available. When the character you need appears, press ▶ to select it—the cursor will move to the next character of current text, if present. Note that you can also enter a number directly from the keypad—it will be accepted and the cursor will move on.

ADD OR DELETE A CHARACTER OR SPACE: To insert a space at the cursor location, press Func ▶. To delete a highlighted character (or space), press Func ◀.

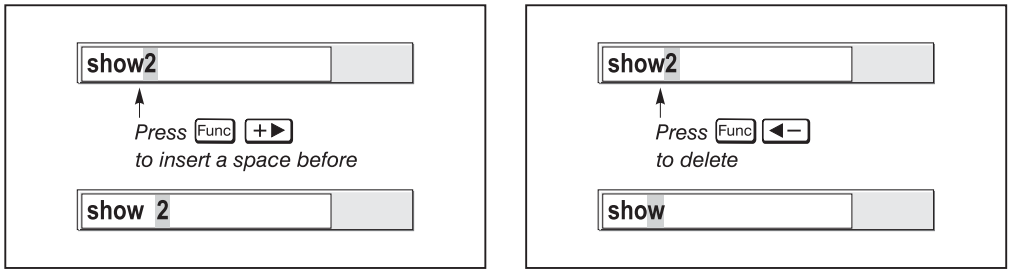

PRESS ↵ (ENTER) WHEN FINISHED: To accept edits and leave the edit window, press ↵ (Enter).

NOTE: *Press* Exit *at any time to cancel changes and return to the previously defined text.*

Editing Numerical Values

Enter numbers directly from the keypad in order to specify numbers representing projectors, channels (source setups), or slots. As each digit is entered, it is displayed and the cursor moves on. Note that channel numbers are defined with 2 digits—for example, if you enter only a single digit (such as "7") for a channel number, the channel will automatically be defined as "07". Enter "07" to utilize this channel.

NOTES: 1) *Once you enter the first digit, this digit replaces all old digits.* ***2)*** *If you press any non-numbered key, the number entered up to that point is accepted and updated as the new value.* ***3)*** *Press* (Exit) *to cancel editing of numerical values.*

3.5 Using Inputs and Channels

NOTE: *See* ***Section 2, Installation and Setup****, for a full explanation of how to connect sources to the projector.*

The projector stores and automatically recalls up to 50 different channels (source setups) for a variety of inputs. This memory feature allows you to define and conveniently use a wide variety of customized setups rather than having to repeatedly re-configure the projector for different presentations. Depending on what you have defined, each physical source connection (i.e., input at the projector) can have several different channels associated with it.

Do I Select an Input Or a Channel?

INPUT – An input is a source physically connected at the projector. (Input 1), (Input 2), (Input 3), (Input 4), (Input 5) or (Input 6) describes the source signal according to which *input slot* it is connected.

SWITCH TO AN INPUT IN EITHER ONE OF TWO WAYS – Pressing the appropriate direct key — (Input 1), (Input 2), (Input 3), (Input 4), (Input 5) or (Input 6) — is a quick and seamless way to display from one of the six inputs connected to the projector. Or, if the "Numbers Select Main Image" option, found in the PIP menu, is to enable, press numbers 1-6 on the number keypad. With either method, the image will be displayed according to the following:

If it is the first time you have used the source/input (or if you used the input but did not define a channel by adjusting anything), the projector will recognize the new input signal based on its frequencies and polarities, and will automatically display an image according to default settings for such a signal. In general, the default fills the screen as fully as possible. This and other default image settings depend on the incoming source.

If you used the source once before and changed a display parameter such as contrast, V-Position, etc., then a channel was automatically created and still exists in projector memory (see below).

If more than one channel exists for the input, the image will be displayed according to the setup parameters for the first channel with matching characteristics.

If PIP is enabled, an input key changes the PIP (secondary) image only. To switch the main input, use the keypad number keys with "Numbers Select Main Image" activated.

NOTES: 1) *Inputs 7 and 8 require the* ***Dual SD/HD-SDI*** *module in either of the projector's option slots. For their selection, see also* ***3.3, Using the Keypads. 2)*** *For more information on Numbers to Select Main Image, see* ***3.8, Working with PIP or Seamless Switching****.*

CHANNEL - A channel is a collection of measurements, locations and settings that tailor the display of a signal to your specific needs. Since source types and applications can vary greatly, you will likely want to adjust and define a wide variety of parameters, such as brightness, contrast, size, etc., in order to customize and optimize the display from or for a particular source. For example, the display settings you choose for a VCR source may be very different from those you choose for a high-resolution computer source, or one signal may simply vary from another signal used previously through the same input location. Once you have adjusted a display parameter, such as pixel tracking or contrast, all current settings are collectively stored in the projector's memory as a unique 2-digit channel, such as 0 9. You can have numerous distinct channels available for the same input, any of which can be selected by using the Chan key on the keypad followed by the 2-digit channel number.

Shown at right is a sample channel list as would be available from Chan. This is typically called the *channel list*.

NOTE: *The* Chan *key may display a channel list or not, depending on what you have defined for "Display Channel List" (see* ***Menu Preferences*** *later in this section).*

In order to access channels by using Chan on the keypad, you must first create the channels. See below.

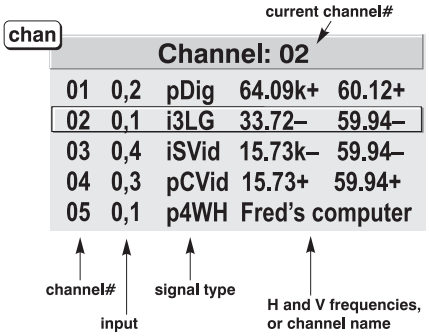

Channel List

Creating a New Channel – AUTOMATIC –

To use a new source with the projector, a new channel must be added to projector memory so that the projector will respond properly to an input signal from that source in the future. A new channel can be created automatically, as described here, or it can be copied from an existing channel and then edited as necessary (see *Copying or Deleting Channels* later in this section).

When you select a direct input (Input 1, Input 2, Input 3, Input 4, Input 5 or Input 6), the projector's existing channels are searched for matching input and signal parameters. If no match to the incoming input signal is found, a new channel is temporarily created based on factory-defined defaults for this type of signal. The *channel number* assigned is the lowest available number from 1-50.

NOTES: 1) *An automatic channel will be discarded unless one or more of its parameters are changed, and will not appear in the channel list (see below).* ***2)*** *If two channels have the same distinguishing source characteristics except for the reversal of sync connectors (i.e., H-sync and V-sync, are switched), they are still defined as distinct channels.* ***3)*** *You cannot define a new channel without an incoming signal.*

If the incoming signal *does* match an existing channel, the image will be set up and displayed as usual according to the parameters currently defined for that channel.

USING A CHANNEL: You can normally select a channel at any time by pressing Chan (see right). If you want to prevent a channel from appearing in this list, you must edit the channel as described in *Channel Edit* later in this section. Such a channel can still be selected by entering its number as shown at right.

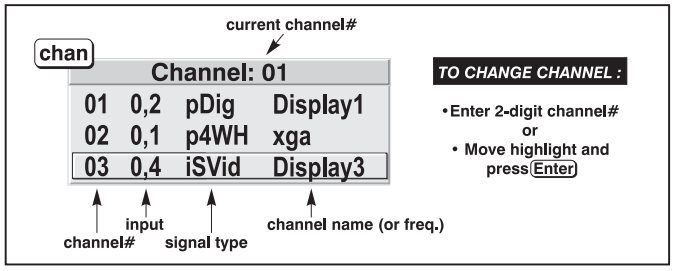

NOTES: 1) *The current channel is highlighted upon entering the channel list, or, if this channel is not displayed here, the first channel in the list is highlighted.* ***2)*** *Channels created automatically do not appear in the channel list unless a parameter for the channel has been changed.*

What Channels Are Defined So Far?

All available channels are listed in the *Channel Setup* menu (Figure 3.10), which describes how each channel can be accessed and which serves as the gateway for editing, copying and deleting channels.

From the presentation level press Menu to display the *Main* menu. To display the *Channel Setup* menu, press 3, or move the highlight to the *Channel Setup* option and press Enter. The *Channel Setup* menu will appear (see sample at right), with the active channel highlighted.

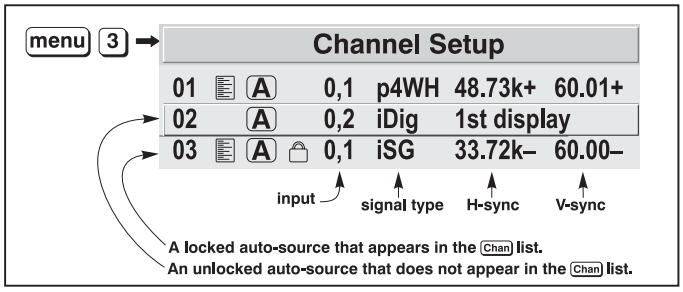

Figure 3.10. All Channels Appear in the Channel Setup Menu

WHAT APPEARS IN CHANNEL SETUP MENU? This menu lists all channels defined so far and indicates where they connect on the projector's rear input panel. The far left column lists channel numbers currently defined. The values in the far right columns indicate horizontal and vertical frequencies—if a user has defined a name for this channel, it appears here instead. Remaining columns contain details pertaining to each channel setup, such as its switcher number (always 0 = projector), slot location (01-08), a variety of icons indicating access to each channel, and an abbreviated description of each signal type. See *Editing a Channel Setup* for details.

NOTE: *If you have more than a handful of channels, use ◄– and +► to see the remaining channels not visible in the initial display of channels.*

SIGNAL TYPE — Either channel list, whether the Chan key list or the *Channel Setup* menu, identifies signal types in a shortened form as defined below. These descriptors indicate what signal information the projector uses to identify a match for a given channel, and are preceded by either an "i" (interlaced signals) or "p" (progressive signal"). See Table 3.2.

Table 3.2. Abbreviations for Signal Type

Abbrev.	Signal Type
4WH	Composite (4 wire) on HC input
4WV	Composite (4 wire) on V input
SG	Sync-on-green
5W	Separate H,V
5WR	Separate H,V swapped
SVid	S-Vid
CVid	Composite Video
Dig	Digital

FUNCTIONS WITHIN THE CHANNEL SETUP MENU —To copy, delete or edit a channel, highlight the desired channel in the *Channel Setup* menu and do one of two things:

- Press Func if you want to copy the selected channel or delete this or other channels. See *Copying or Deleting a Channel* below.
- Press Enter if you want to edit channel setups (i.e., non-image related parameters) for the selected channel. See *Editing a Channel Setup*, below.

Copying or Deleting Channels

TO COPY A CHANNEL, highlight the desired channel in the *Channel Setup* menu, then press Func to go to the *Channel Copy/Delete* submenu. Select "Copy" and press Enter—a new channel will be created. It is identical to original, which still remains, but it is identified with the next available number from 01-50 (Figure 3.11). If you change your mind and do *not* want to copy the current channel, press Exit to cancel and return to the previous menu. Copying channels is a quick method for creating numerous channels, each of which can then be edited and adjusted for a variety of presentations in the future.

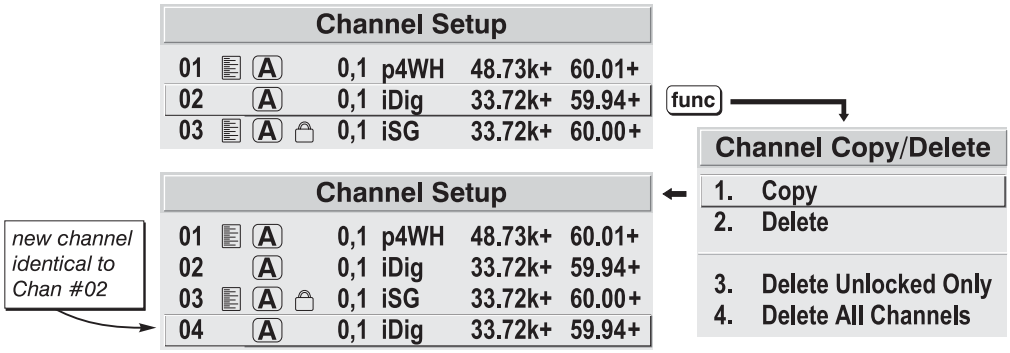

Figure 3.11. Copying A Channel

TO DELETE A CHANNEL, highlight the desired channel in the *Channel Setup* menu, then press Func to activate the *Channel Copy/Delete* submenu. Select "Delete" and press Enter—a confirmation window will appear to make sure that you really want to delete this channel. See Figure 3.12.

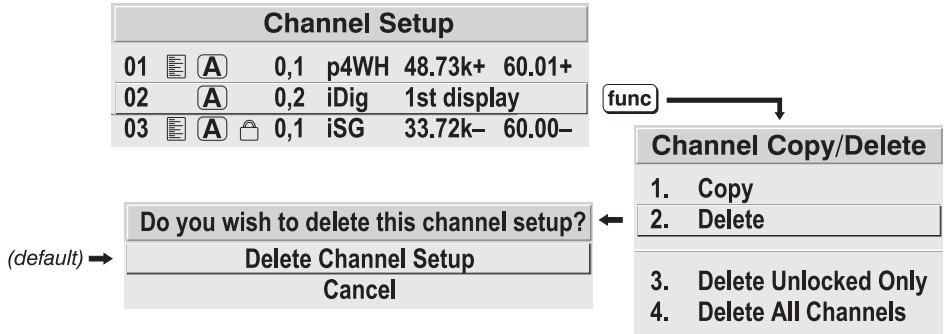

Figure 3.12. Deleting a Channel

TO DELETE MULTIPLE CHANNELS, highlight any channel in the *Channel Setup* menu and press Func to go to the *Channel Copy/Delete* submenu. Select "Delete Unlocked Only" and press Enter to delete all unlocked channels. Or select "Delete All Channels" to delete all channels, even those that are locked. In either case, the current channel will remain but will be redefined from projector defaults.

NOTE: *For any deletion, a confirmation box appears to make sure that you really want to delete. Select "Cancel" if you don't want to delete after all.*

Editing a Channel Setup

The basic setups that describe how and where a channel can be accessed are listed in the *Channel Setup* menu. These channel setups can be edited at any time in the *Channel Edit* submenu.

CHANNEL EDIT — STEP 1

From the presentation level press Menu to display the main menu. To display the *Channel Setup* menu, press 3, or move the highlight to the *Channel Setup* option and press Enter. The *Channel Setup* menu will appear.

CHANNEL EDIT — STEP 2

To edit parameters shown in the *Channel Setup* menu, select the relevant channel and press Enter. The *Channel Edit* menu will appear similar to the sample shown in Figure 3.13.

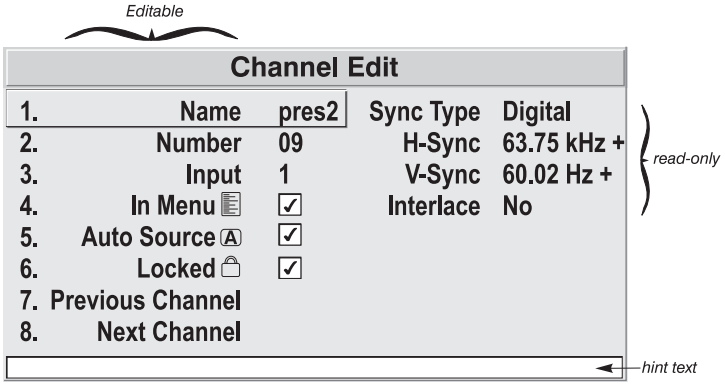

Figure 3.13. Channel Edit Menu (SAMPLE)

CHANNEL EDIT — STEP 3

If desired, review and/or edit the following channel setups in the *Channel Edit* menu:

- **CHANNEL NAME:** An alpha-numeric label can be defined and/or changed here. Channel names can be up to 12 characters in length.
- **CHANNEL NUMBER:** A 2-digit channel number can be changed here.

NOTES: 1) *If you enter a channel number that already exists, a dialog message appears indicating that this number is already in use–assign a different channel number.* ***2)*** *You can define 50 channels.*

- **INPUT:** 1-8, corresponding to where on the projector's input panel the source is connected.
- **IN MENU:** If checked (default, except for automatically defined channels with unchanged parameters), this defined channel will then appear in the list available when Chan key is pressed. If unchecked, the channel must be accessed via the channel setup menu Menu 3 on the keypad or via the Auto Source function.

  NOTE: *On-screen display of the channel list is an option that must be set in the* ***Menu Preferences*** *menu.*

- **AUTO SOURCE:** If checked, (default), the projector can automatically locate this channel when an incoming input signal matches. If not checked, the projector can locate the selected channel only when it is directly selected via Chan on the keypad—and a change in input signal will *not* result in a channel change.
- **LOCKED:** If checked, all of the image settings for this channel are disabled. If unchecked (default), all available image settings can be adjusted as desired. You cannot use Auto Setup with a locked channel.
- **PREVIOUS CHANNEL:** Select this option to see or change *Channel Edit* settings for the previous channel in the *Channel Setup* list.
- **NEXT CHANNEL:** Select this option to see or change *Channel Edit* settings for the next channel in the *Channel Setup* list.

3.6 Adjusting the Image

The most commonly used options for image adjustments are accessed through two menus: *Size and Position* (Menu 1) and *Image Settings* (Menu 2), both of which appear in the *Main* menu. From either of these two menus, you can change settings affecting the image from the current channel by working with the appropriate slidebars, checkboxes and pull-down lists. Exit will return to the previous menu (or to the presentation, if from the *Main* menu) and accept any changes you may have entered. Settings are saved with the current channel.

From your presentation, you can access any of the individual options in these menus by pressing Menu followed by the appropriate two-digit number representing their location in the menu system. For example, press Menu 2 3 to quickly access the "Gamma" option in the *Image Settings* menu.

Note that for certain options, you may prefer to use a "direct key" from presentation level to go directly to a particular option without traveling through the menu system (*available for certain display parameters only*). For example, press Cont to access the "contrast" slidebar immediately. Press Exit to return to your presentation.

NOTES: 1) *To hide these "direct" slidebars, disable the" Display Slidebars" checkbox in the* ***Menu Preferences*** *menu.* ***2)*** *To hide the entire menu system from view, turn off the on-screen display by pressing* OSD ▼.

Before You Begin

Use Auto Setup (Auto Setup)

For a good and efficient first step in perfecting the image, press Auto Setup. This initiates an automated process in which the projector quickly optimizes critical display parameters for unlocked channels such as size, position, pixel tracking, etc., based on the type of incoming source data detected. An *Auto Setup* can save considerable setup time, and you can still modify the adjustments as desired using menu options described below.

Size and Position Menu

In the *Size and Position* menu, you can increase or decrease the size of your main image, change its proportion (aspect ratio), move the image to a specific area of the screen, and refine other related parameters. Use *Size and Position* controls to match the image precisely to the screen used at the site.

Size and Position		
1.	Resize Presets	No Resizing ▼
2.	Size	0.729
3.	Vertical Stretch	1.000
4.	Pixel Track	858
5.	Pixel Phase	0
6.	H-Position	360
7.	V-Position	262
8.	Reserved	
9.	Reserved	
0.	Advanced Size and Position	

Refer to *"Using Slidebars and Other Controls"* (earlier in this section) if you need help using any of the options and controls. Changes made in the *Size and Position* menu are applied immediately and are saved when you exit the menu (press Exit or Menu).

Resize Presets

Select a *Resize Presets* option to quickly display an image in its native resolution or to automatically resize an image to closely fill the projector's native resolution of 1400 x 1050, or to optimize the width or height of your display. *Size*, *Position* and *Blanking* parameters will automatically adjust accordingly. Or, if Blanking is set first, which defines an Active Input Area, *Resize Preset* scaling will occur in this region of interest only. Resizing options are explained in detail below.

Resize Presets	
1. Default	= maximize for current source
2. No Resizing	= display in native resolution
3. Full Size	= fill the screen (regardless of source)
4. Full Width	= fill display width & keep aspect ratio
5. Full Height	= fill display height & keep aspect ratio
6. Anamorphic	= retain 16:9 aspect ratio
Custom (not selectable)	= **non-preset values for** *Size, Vertical Stretch, H-Position, V-Position and/or Blanking*

WHAT IS THE RESIZING DEFAULT? By default when displaying a new source, your image will utilize as much of the projector's display area (1400 x 1050) as possible for the type of incoming source data. See *Select "Default"* below.

WHEN "CUSTOM" APPEARS: The "Custom" re-size descriptor automatically appears in the *Size and Position* menu when any of the values for *Size*, *Vertical Stretch*, *H-Position*, V-*Position* or *Blanking* do not correspond to those for a preset. It is not a choice in the *Resize Presets* pull-down list.

- Select **"DEFAULT"** for most sources (factory default). The image will be centered and displayed as large as possible *depending on the type of source,* as described below:

- ✓ ***A 5:4 graphic image*** will enlarge to fill the screen height, and be centered between narrow black sidebars.
- ✓ ***A video image or 4:3 graphic image*** will enlarge to fill the screen width.
- ✓ ***An HDTV (16:9) image*** will fill the width and be centered between black bars on top and bottom.

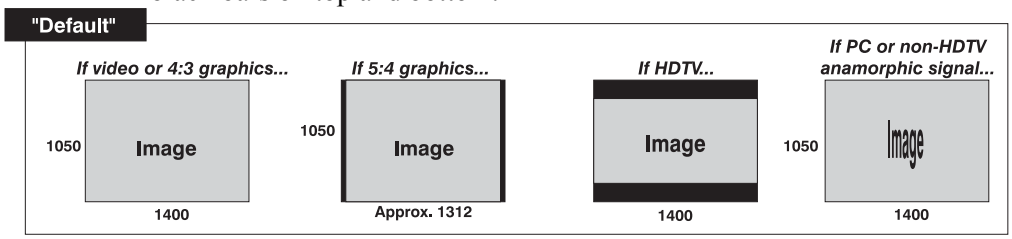

- Select **"NO RESIZING"** to display the image in its native resolution, which may be smaller than the projector's 1400 x 1050 resolution. For example, for a source with a native resolution of 800 x 600, "No Resizing" will center a small image within a black border—the black border areas are unused areas. See below.

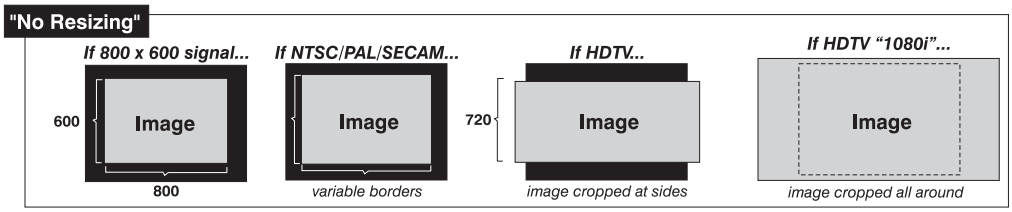

- Select **"FULL SCREEN"** to use *all pixels* (1400 x 1050) for displaying the image, regardless of source or original aspect ratio. Incoming source material having a different aspect ratio than the projector will be stretched for display.

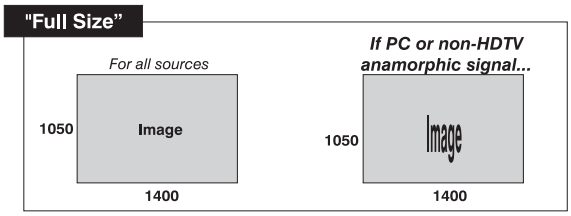

- Select **"FULL WIDTH"** to fill the projector's display from left-to-right without changing the original aspect ratio of the image. Depending on the source, data at the top and bottom may be discarded (cropped), or the display may have black borders at the top and bottom (called "letterboxed").

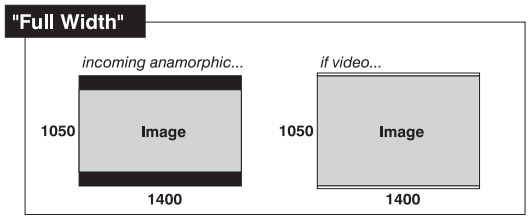

- Select **"FULL HEIGHT"** to fill the display from top-to-bottom. Depending on the source, this may create borders.

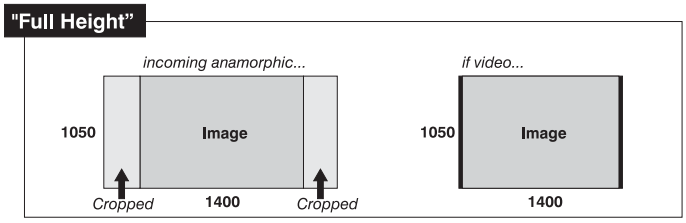

- Select **"ANAMORPHIC"** to display an anamorphic image in its native 16:9 aspect ratio. The image will fill the screen from side-to-side, and be centered between narrow black bars on top and bottom. This is used for DVD players that output widescreen images compressed into 4:3 NTSC format.

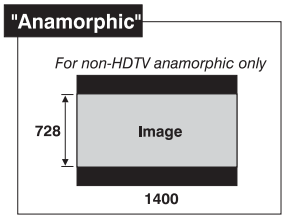

Size

"Size" controls both the image *width* and *height* in tandem, maintaining the current aspect ratio (proportion) of the displayed signal data.

Vertical Stretch

"Vertical Stretch" adjusts the *height* of the image while keeping the width constant. Use "*Vertical Stretch"* to change the aspect ratio of the display.

Pixel Track

Steady flickering or several soft vertical stripes or bands across the entire image indicates poor pixel tracking. Proper pixel tracking helps ensure that the image quality is consistent across the screen, that the aspect ratio is maintained, and that the pixel phase can be optimized (described below). Tracking determines the frequency of the pixel-sampling clock, indicated by the number of incoming pixels per line, so that all pixels generated by a particular source are sampled.

NOTE: *By default, the projector samples at the correct frequency for most sources.*

For best results, use a good test pattern such as a smooth gray consisting of a clear pattern of black and white pixels, or a similar "half on, half off" graphic image, such as the Windows 2000 shutdown screen. Adjust the slidebar until the vertical stripes broaden to the point where one large stripe fills the image. If the image still exhibits some shimmer or noise, adjust *Pixel Phase* (below).

Pixel Phase

NOTE: *Adjust "Pixel Phase"* ***after*** *"Pixel Tracking".*

Adjust pixel phase when the image (usually from an RGB source) still shows shimmer or "noise" after pixel tracking is optimized. Pixel phase adjusts the phase of the pixel sampling clock relative to the incoming signal.

For best results, use a good test pattern such as a smooth gray consisting of a clear pattern of black and white pixels, or a similar "half on, half off" graphic image, such as the *Windows 2000* shutdown screen. Adjust the slidebar until the image stabilizes and each pixel is clearly defined. You may notice that you can stabilize the image at more than one point—i.e., you may find that the image appearance at "11" is identical to the image appearance at "38", thus you can use either setting.

If some shimmer from a video or HDTV source persists, use the "Filter" control to remove high-frequency noise from the signal.

H-Position

This option moves the image right or left within the area of available pixels.

NOTE: *The value shown represents where the approximate center of the image lies in relation to the total number of pixels available horizontally. This varies widely according to the signal—watch the image while adjusting.*

V-Position

This option moves the image up or down within the area of available pixels.

NOTE: *The value shown represents where the approximate center of the image lies in relation to the total number of pixels available vertically. This varies widely according to the signal—watch the image while adjusting.*

Advanced Size and Position — SUBMENU

This submenu consists of the following options:

Advanced Size & Position		
	Active Input Window	720x483
1.	Top Blank	0
2.	Bottom Blank	0
3.	Left Blank	0
4.	Right Blank	0
5. Plug & Display (EDID)		1280x1024x60Hz▼

ACTIVE INPUT WINDOW: This read-only value indicates the current size (i.e., area) of your displayed data or "region of interest" as defined by the blanking controls. By default, the projector automatically determines what portion of its full resolution to use, and pixels in the surrounding borders are turned off. You can also specify a specific active input window size by adjusting one or more "Blank" settings. For example, if you have blanked (cropped) 100 pixels from both the left and right edges of an incoming source of 1400 x 1050, the remaining active input window will be reduced to 1200 x 1050. When using SD or HD or a decoded video source at **INPUT 3** or **INPUT 4**, the default blanking of "0" defines an active input window of 720 x 483.

BLANKING (TOP, BOTTOM, LEFT, and RIGHT): Crop the image as desired so that unwanted edges are removed from the display (changed to black—see Figure 3.14). Blanking defines the size of the *Active Input Window*, or area of interest. Range of adjustment depends on the source resolution and other factors. After adjustment of blanking it may be necessary to perform a source switch.

NOTE: *Blanking a PIP image resembles zoom (Figure 3.15). For example, left Blanking zooms the right side of the PIP image; Right Blanking zooms the left side. There are no black bars.*

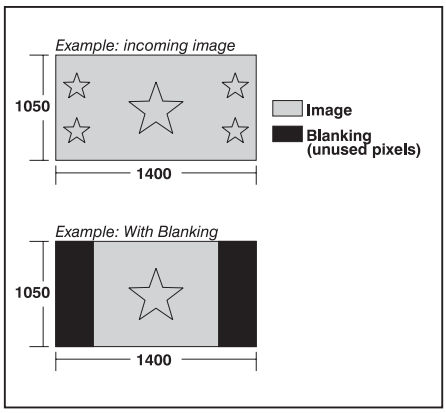

Figure 3.14. Blanking of a Primary Image

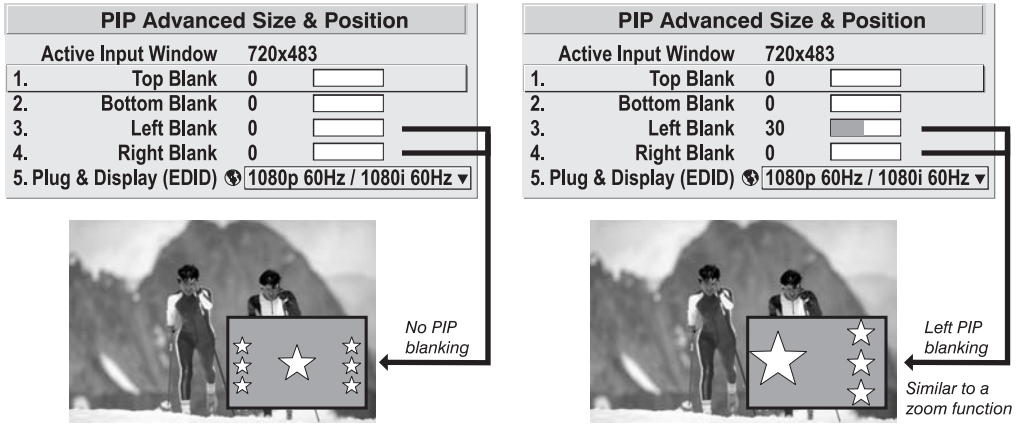

Figure 3.15. Blanking of a PIP Image

PLUG & DISPLAY (EDID): By default, a *Plug & Play (EDID)* source outputs a signal according to the EDID information provided by the projector. To override this information and display in a different format (for example, if your *Plug & Play [EDID]* device does not support the projector's resolution and/or frequency), select the desired *Plug & Play (EDID)* resolution from the list.

1. 1400x1050x60Hz
2. 720p (1280x720x60Hz)
3. DC2K (2048x1080x60Hz)
4. 1024x768x116Hz 3D
5. 1280x1024x110Hz 3D
6. 1400x1050x102Hz 3D
7. 1080p 60Hz / 1080i 60Hz
8. 1080p 50Hz / 1080i 50Hz
9. 1080p 24Hz / 1080i 30Hz

Any daisy-chained projectors will also display according to the chosen *Plug & Play (EDID)* format.

EDID = Extended Display Identification Data standard.

Image Settings Menu

Use options in the *Image Settings* menu to alter your main image without affecting its size or position. Changes made to the *Image Settings* menu are applied immediately and are saved when you exit the menu (press Exit or Menu). Options not available for the projector model or source are disabled and appear dim (gray).

Image Settings

1.	Contrast	50.0
2.	Brightness	50.0
3.	Gamma	2.2
4.	Filter	Off
5.	Detail	0
6.	Noise Reduction	0
7.	Color Space	YPbPr
8.	Video Options	
9.	Input Levels	
0.	Advanced Image Settings	

Contrast

(***SHORT CUT:*** Press Contrast and adjust the slidebar.)

"Contrast" increases or decreases the perceived difference between light and dark areas of the image (0-100). For best results, keep close to 50. If the contrast is set too high, the light parts of the image lose detail and clarity. If the contrast is set too low, the light areas will not be as bright as they could be and the overall image will be dim. For best results, start with a low value and increase so that whites remain bright but are not distorted or tinted, and that light areas do not become white (i.e., are "crushed").

NOTE: *If the environment lighting changes, an adjustment of* ***Gamma*** *is recommended (see below).*

Brightness

(SHORT CUT: Press (Bright) and adjust the slidebar.)

"Brightness" increases or decreases the amount of black in the image (0-100). For best results, keep close to 50. Start with a high value and decrease so that dark areas do not become black (i.e., are "crushed"). Conversely, high brightness changes black to dark gray, causing washed-out images.

NOTE: *Brightness should be adjusted before contrast, as Brightness setting affects the contrast setting.*

Gamma

(SHORT CUT: Press (Gamma) and adjust the slidebar.)

"Gamma" is a global setting that determines what gray shades are displayed between minimum input (black) and maximum input (white) for all signals. A good gamma setting helps to optimize blacks and whites while ensuring smooth transitions for the "in-between" values utilized in other colors. Thus, unlike "Brightness" and "Contrast" controls, the overall tone of your images can be lightened or darkened without changing the extremes, and all images will be more vibrant while still showing good detail in dark areas.

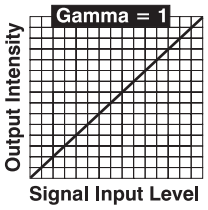

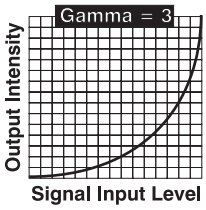

Gamma is used to fine-tune the gamma table currently in use, ranging from 1 – 3 (2.2 = default). If excess ambient light washes out the image and it becomes difficult or impossible to see details in dark areas, lower the gamma setting to compensate. This will improve contrast while maintaining good details for blacks. Conversely, if the image is washed out and unnatural, with excessive detail in black areas, increase the setting. In high ambient light conditions, lower gamma may produce better results than higher gamma. Gamma of 2.2 (default) indicates the gamma table has not been adjusted. For more information, refer to *Advanced Image Settings* submenu, *Gamma Table*. Again, good gamma improves contrast while maintaining good details for blacks.

Filter

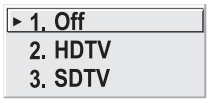

The proper filter setting is automatically set for virtually all signals, and rarely needs to be changed. It applies a low pass filter for noise reduction in the incoming input signal, particularly for HDTV or SDTV. Applied in the analog domain before sampling, this filtering removes high frequencies and thus reduces pixel phase noise (note this also reduces signal bandwidth). Override only if standard pixel tracking and phase adjustments do not adequately clear up a "noisy" video signal, or if a graphics signal appears overly "soft". Both instances indicate that "Filter" may be set to the wrong option.

Detail

"Detail" adjusts the sharpness of a video image so that edges remain clearly defined. It can be particularly useful if a significant "Noise Reduction" adjustment has caused the image to appear too soft. Adjust until the display is as sharp as desired, keeping in mind that because "Detail" adds some high frequencies back into the image, it can also re-introduce a certain degree of noise.

Noise Reduction

"Noise Reduction" is similar to the "Filter" control, but operates in the post-sampling digital domain with a more subtle effect. Higher settings are most useful for clearing up noisy RGB images such as those from a PC. Adjust as desired, keeping in mind that reducing noise (which reduces high frequencies) may also soften the image.

Color Space

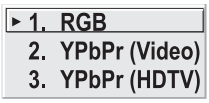

"Color Space" determines how the color components of an analog input signal are decoded for accurate color in the display. Selecting a color space option is useful only for analog signals and certain digital sources connected to **INPUT 1, INPUT 2, INPUT 5** or **INPUT 6.** Although color space for these analog signals is automatically determined by the projector, in some circumstances you may wish to override this and manually set a specific color space.

NOTE: *For many digital signals or for signals connected to* **INPUT 3** *or* **INPUT 4***, the color space function is entirely automatic and the pull-down list disabled.*

The current color space appears in the *Image Settings* menu. Press ENTER to select a different option:

- Select **RGB** *unless* you are using component video at **INPUT 1, 2, 5** or **6.**
- Select **YPbPr (Video)** with a standard definition televised signal (SDTV).
- Select **YPbPr (HDTV)** with a high definition televised signal (HDTV).

NOTE: *When certain RGB signals are first connected, the projector may not initially recognize them as RGB and will incorrectly decode their color information as YPbPr (video). These signals can include:*

- *RGB signals in NTSC, PAL, SECAM frequency ranges.*
- *Scan-doubled sync-on-green.*
- *Scan-quadrupled sync-on-green.*

For these signals, change the Color Space to RGB and then define a new channel for future use.

Video Options — SUBMENU

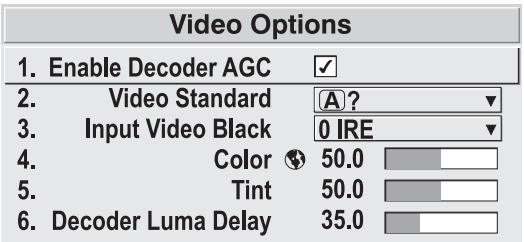

This submenu is used with video sources only (**INPUTS 3** or **4**).

ENABLE DECODER AGC: Automatic Gain Control (AGC) affects decoded video images only. Enter a checkmark (default) in most instances—this activates the decoder's AGC circuit to

ensure properly bright images. Delete the checkmark if a decoded video image exhibits strange color artifacts such as stripes in highly saturated colors, indicating an incompatibility between this source and the AGC.

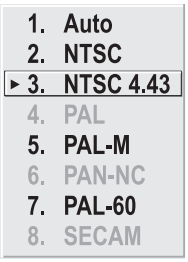

VIDEO STANDARD: For all but the more unusual video standards available in the world, the projector automatically detects the incoming horizontal and vertical frequencies and sets the projector's processing of this signal to the corresponding standard. The current video standard name appears in the *Video Options* submenu, and includes an "A" if it has been auto-detected. Press ↵ to view or select a different video standard from those available to the projector—any that are disabled have frequency characteristics that differ from those of the incoming signal. Selecting a specific standard forces the projector to process the signal according to this standard.

NOTE: *Best results are obtained with defined channels. Otherwise, switching from one video source to another can sometimes cause slight disturbances in the display, indicating that the Auto function is struggling. Recover by briefly selecting a different video standard, then going back.*

Table 3.3. Regions and Video Standards: Summary

Standard	Where Used (SUBJECT-TO-CHANGE)
NTSC	N. America and Japan
NTSC 4.43	A tape-only standard for partially-translated hybrid signals
PAL	Most of Europe, China, Australia, some of S. America, some of Africa
PAL-M	Brazil
PAL-NC	Argentina, Chile, other Latin American countries
PAL 60	
SECAM	France, Eastern Europe, most of Africa

NOTE: *Generally, use "Auto" for all instances EXCEPT:* ***1)*** *a poor quality input signal or* ***2)*** *a black-and-white video signal. In order to detect and display such signals, select the relevant standard from the list.*

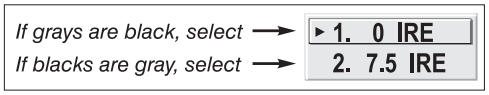

INPUT VIDEO BLACK: This control compensates for incoming elevated black levels present in certain video signals, and ensures that blacks in the display are neither crushed (i.e., where dark grays appear black) nor excessively elevated (i.e., where blacks appear dark gray). By default, the projector automatically determines the best setting according to the type of incoming video signal:

- **0 IRE** – Used for DVD output with "enhanced black", SECAM, most PAL standards, and Japanese NTSC.
- **7.5 IRE** – Used for most NTSC video signals.

For some types of video, you can override the setting. The control is disabled for other types of video (and all graphics sources). Generally, if black appears crushed when brightness = 50, choose "0 IRE". If black appears excessively elevated, use "7.5 IRE".

COLOR: This slidebar adjusts the color saturation level, i.e. the *amount* of color in a video image. Lower settings produce less saturated colors — for example a setting of "0" produces a black and white image. If the color level is too high, colors will be overpowering and unrealistic.

TINT: This slidebar adjusts the red/green color hue for true color reproduction of video and HDTV signals connected to Input 3 or 4. For best results, adjust tint while displaying an external test pattern—otherwise, it is recommended that tint remain at its default setting.

DECODER LUMA DELAY: This control affects any incoming composite or S-video signal, delaying the luma signal (intensity) in relation to the chroma (color). In the image, increasing the luma delay will move luma (seen as a shadow where colors overlap) to the right slightly, with colors remaining in place. Decreasing this delay will move the shadow slightly to the left. If necessary for your current source, adjust so that no shadows occur with adjacent colors.

Input Levels — SUBMENU

NOTES: 1) *Because the projector automatically optimizes input levels for all but the most unusual of sources, it is recommended that only experienced users use the* ***Input Levels*** *submenu.* ***2)*** *Before beginning, check that overall contrast and brightness settings are near 50* ***and*** *that color temperature is properly set up on an internal grayscale test pattern.* ***3)*** *There must be at least 2 consecutive white pixels present in the image for proper "Auto Input Level" function. Leave this control* ***off*** *after use.*

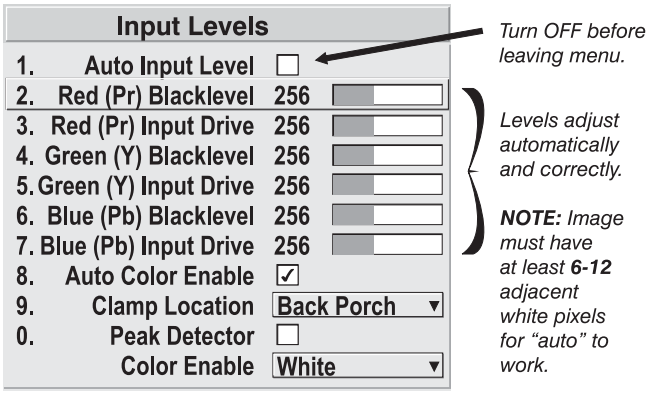

Good RGB or input levels—that is, the *drives* and *blacklevels* for each of the three colors, red, green and blue—ensure that images from analog sources other than decoded video have maximum contrast without crushing black or white. By default (and in an "Auto Setup"), the projector automatically determines the best input levels by monitoring image content and adjusting the controls appropriately—further adjustment is typically not required to obtain proper blacks or whites.

NOTE: *This automatic adjustment requires at least* ***6-12 consecutive white pixels*** *in the image. Without these pixels, input levels may produce skewed colors, particularly in non-video images.*

However, for a very unusual source exhibiting one or more overly high blacklevels (typically caused by a noisy source causing blacklevel spikes), an experienced user may prefer to use the *Input Levels* menu (shown above). These adjustments, which together serve as a calibration process compensating for differences in sources and cabling, enable an experienced user to perfect the source image input levels and eliminate the "overshoot" and "undershoot". Note that *Input Levels* are of limited use with digital signals, but do offer some ability to tweak poorly mastered source materials.

NOTES: 1) *Input levels apply for the current source only, but for any color temperature used.* ***2)*** *Assuming that color temperature has been set up based on the internal test patterns, you can then set up input levels for a given source so that it matches the color temperature of the internal test patterns.*

AUTO INPUT LEVEL – Temporarily enter a checkmark *only* if you are an experienced user and you have an unusual source that you feel needs further color temperature and/or input level adjustment. This compensates for incoming out-of-range drives (white) and blacklevels (black) that would cause "crushing" of light and dark colors in the image. After entering a checkmark, wait for the six slidebar values to stabilize, then delete the checkmark and exit. The Auto Input Level is automatically turned off upon exit from the Input levels Menu.

BLACKLEVELS AND DRIVES – To check your image levels and adjust these controls:

1. Make sure overall "Contrast" and "Brightness" settings are both set to near 50.

   NOTE: *Not required for "Auto" adjustment.*

   - (Contrast) = 50 (approx.)
   - (Bright) = 50 (approx.)
2. Check the color temperature setup using an internal grayscale test pattern, making sure to obtain a neutral grayscale. *NOTE: Not required for "Auto" adjustment.*
3. Confirm that you are using an analog source ***not*** connected to **INPUT 3** or **INPUT 4**, as Input Levels are not applicable for digital sources or sources going through the decoder. A grayscale is recommended.
4. If the blacks and/or whites appear OK, input levels do not need adjustment. If black levels are too high (and/or whites are too low, which is rare), you likely have a noisy source that is producing skewed input levels. Continue with Step 5.
5. Temporarily enable "Auto" in the *Input Levels* submenu. Wait for all 6 values to stabilize. Alternatively, do *not* use "Auto"—reduce blacklevels manually instead. Judge by eye and change one or more of the six levels as necessary to obtain proper blacks and whites. You may want to see only a certain color while adjusting—use the "Color Enable" option (described below).
6. Delete the "Auto" checkmark and leave the *Input Levels* menu.

IMPORTANT: Do not use Input Levels to adjust color temperature. *This will distort Contrast and Brightness functions as well as color temperature.*

AUTO COLOR ENABLE – When a checkmark is present, selecting a specific blacklevel or drive to adjust will automatically enable the corresponding color in the display. Delete the checkmark to see all colors, or to enable a different specific color through the Color Enable Control.

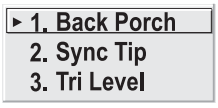

CLAMP LOCATION – This option (formerly known as *sync tip clamping*) can brighten the image produced from certain high-resolution high-frequency graphic sources. For almost all sources, the projector automatically selects the best clamp location. Use the normal *Back Porch* location if the image is either sufficiently bright or overly bright. Select *Sync Tip* if the image appears unusually dim, if there are horizontal streaks across the image, or if there is significant color drift. This moves the clamping pulse from the normal back porch location (which is likely too short) to the tip of the horizontal sync pulse. *Tri Level* is typically needed for an HDTV source.

COLOR ENABLE – Select which color or colors you want to see in the display, useful while working with color temperature white levels or input levels.

PEAK DETECTOR – The Peak Detector is a tool to assist with defining individual input levels, enabling you to accurately set the Input Levels for any particular source with the appropriate image. Enabling the Peak Detector activates a special operating mode for detecting ***only*** pixels that are considered black or white—all other levels are displayed as a mid-level gray. When used with a smooth grayscale pattern in which black and white are known to be at opposite edges of the image, you can watch these isolated areas while adjusting individual blacklevels and input drives until both black and white edges are ***just*** visible and distinguished from neighboring pixels. Images from this source will then display correct blacks and whites without crushing.

See Figure 3.16. ***Adjusting Input Levels Using the Peak Detector***:

1. Display a 16 level grayscale test pattern from the desired external source, and enter a checkmark in the Peak Detector checkbox.

   NOTE: *The "Peak Detector" will initially render the grayscale as a uniform gray field before adjustment or extreme crushing.*
2. Display one primary color.

   NOTE: *Selecting Auto Color Enable ensures the correct color is displayed for each setting.*
3. For the current color, adjust its corresponding "Blacklevel" slidebar ***just*** until a single band of black appears at one edge of the screen. This band represents the first band of the grayscale pattern, which should be 100% black. Do not adjust too far.
4. With the same color still active, adjust its corresponding "Input Drive" slidebar ***just*** until a single band of color appears at the opposite edge of the screen. This band represents the last band of the grayscale pattern, which should be 100% white (or the current color, if a certain color is enabled). Do not adjust too far.
5. It may be advantageous to go back and check the black band—adjust the blacklevel slidebar if necessary.

   NOTE: *Readjusting blacklevels at this point affects the gain; only readjust when absolutely necessary.*
6. Repeat Steps 3-5 with the other two remaining primary colors. When each primary color shows ***one*** optimized black band and white (or colored) band, the input levels for this source are correctly set. Upon exiting the *Input Levels* menu, the Peak Detector checkbox will clear.

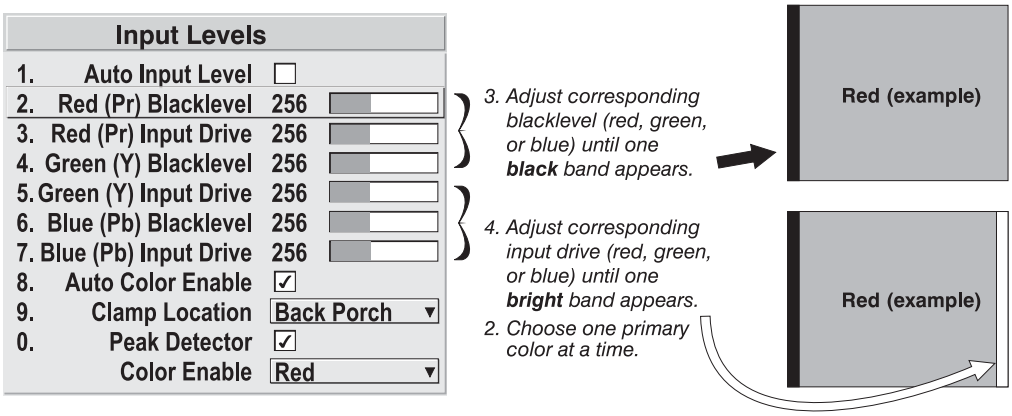

Figure 3.16. Adjusting Input Levels Using the Peak Detector
(RED EXAMPLE SHOWN)

Advanced Image Settings — SUBMENU

Use the *Advanced Image Settings* submenu to make the adjustments necessary for lesser used but more specialized applications on your projector.

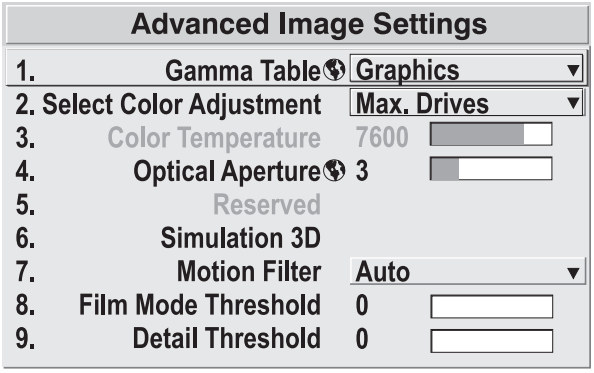

GAMMA TABLE: This control applies a default *video*, *graphics* or *simple* gamma table or "curve" to your images, controlling the intensity of midlevel colors and producing maximum contrast, brightness and color performance. As shown at right, the graphics curve is a simple power curve while the video curve has a linear segment near black to compensate for increased black levels typical of video signals. A simple gamma curve is a value of 2.2 and is correct for most signal conditions. Although the projector automatically applies either the graphics or video curve according to what type of incoming signal is detected, in some cases you may wish to override this default and use *graphics* gamma for a video source or *video* gamma for a graphics source. Alternatively, if neither default is ideal, you may prefer to apply the simple (non-optimized) gamma curve or a user-defined custom gamma curve that has been created externally, named, and downloaded to the projector (requires separate PC-based *Arbitrary Gamma* and *KoRE Librarian* software applications). If any of these special user curves have been installed, their names will appear in the Gamma Table pull-down list.

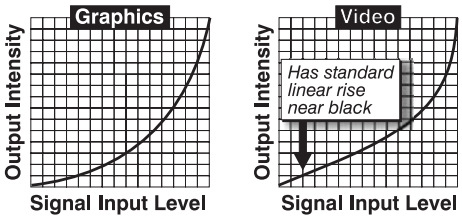

Keep in mind that any *Gamma Table* choice sets the related *Gamma* value (shown in the *Image Settings* menu) to a 2.2 default, where it can be fine-tuned as desired.

Different values (1-3) here indicate that the original gamma table has been adjusted with either the *Gamma* slide bar or direct key.

1. Max. Drives
2. Color Temperature
3. SD Video
4. HD Video
5. User 1
6. User 2
7. User 3
8. User 4

SELECT COLOR ADJUSTMENT: In "Select Color Adjustment", choose an overall color palette for all images. The "Max Drives" factory default simply drives all 3 colors at their maximum level so that they are fully on and cannot be changed. The two other pre-defined color adjustment choices—*SD Video* and *HD Video*—apply a color gamut optimized for video sources (standard or high-definition). Alternatively, you can specify a color temperature. This enables the adjacent Color Temperature slidebar and applies its current setting (default = 6500K). If none of the pre-defined "Select Color Adjustment" options or color temperatures suit your application, select one of four color gamuts previously defined by a user (User 1, 2, 3, 4). A "User" option applies a customized color performance in which the user has precisely set the hue and intensity of each color component in the *Color Adjustment by X/Y* or *Color Saturation* submenus. It is most often needed with multiple-projector applications. Select the color adjustment producing the best color accuracy for your application and installation.

To configure a "User" color adjustment (gamut), use either the *Color Adjustment by X/Y* or *Color Saturation* submenu.

NOTES: 1) *"Color Temperature" defaults to 6500K until changed. All four "User" options default to SD Video unless the user has redefined them.* ***2)*** *Factory-defined color primaries, which ensure consistent color gamut from projector-to-projector, can be calibrated in the* ***Service*** *menu only. If you suspect alteration, the factory settings can be recovered with selection of "****Reset to Factory Defaults?"*** *in the* ***Color Primary Settings*** *submenu within the* ***Service*** *menu (password-protected).*

COLOR TEMPERATURE — Adjust to apply a specific and accurate color temperature to all displays. Color temperatures are expressed in degrees Kelvin (3200-9300K), and utilize different combinations of the projector's original native color primaries to produce a "coloration" or cast (reddish or bluish) in images—the lower the temperature, the more reddish the cast; the higher the temperature, the more bluish the cast. Note that the slidebar is enabled only if you have a source connected and have selected "Color Temperature" in the adjacent "Select Color Adjustment" pull-down list in the *Advanced Image Settings* menu.

OPTICAL APERTURE - The optical aperture inside the projector controls the diameter of the light beam passing through the system. With a fully open aperture (slidebar default of "0"), the maximum amount of light passes through for maximum brightness in your images. Increase the slidebar setting to reduce the aperture diameter and maximize contrast ratio instead. Performance of aperture depends on the lens in use (optical aperture is not available in Roadster S^+ 20K).

NOTE: Optical Aperture *(when present) also appears in the* ***Lamp*** *menu.*

RESERVED - No function.

Simulation 3D — SUBMENU OF ADVANCED IMAGE SETTINGS

Use the options in the *Simulation 3D* menu to make the timing adjustments necessary for realistic simulation and 3D images. Figure 3.17.

NOTES: 1) *Available in Mirage projectors only.* ***2)*** *For complete 3D application notes, refer to the separate Using 3D in Mirage manual provided with the Mirage projector.*

Simulation 3D		
	Frame Delay Monitor	1047
1.	Frame Delay	1000
2.	Dark Interval	1200
3.	3D Stereo Sync Locking	Output ▼
4.	3D Stereo Sync Select	Input A ▼
5.	3D Stereo Sync Delay	1000
6.	Frame Lock Enable	Locked ▼

Figure 3.17

FRAME DELAY MONITOR — This slidebar monitors the latency between input and output. For best results, the bar width and value should remain fairly constant, indicating that timing of input and output frames is locked; the Frame Delay Monitor value should stay within 5-10 lines or so of the Frame Delay setting. If a frame is lost or "dropped", the bar will move suddenly and the values will change, indicating that the frame input is no longer equal to the output.

NOTE: *See separate Using 3D in Mirage manual provided for more information.*

FRAME DELAY — Set the number of lines delayed between the input signal and its appearance on screen, keeping in mind that projector processing always *adds one frame of delay* to the frame delay setting. For applications such as simulation, where the feeling of "real time" image response is a priority, a minimum setting is usually preferable. For projectors capable of 3D (stereographic) applications where alternating left-right frames must be synchronized with the corresponding L/R shutters in 3D glasses, a total frame delay setting of two (or multiple of two) may be more useful. If set too high or low, frame locking will not be possible—most sources require approximately 50 lines of delay to ensure frame locking.

NOTE: *See separate Using 3D in Mirage manual provided for more information.*

DARK INTERVAL —Adjust Dark Interval to artificially increase the amount of dark time between displayed frames for stereographic 3D images. Higher settings provide more time for shutters in 3D glasses to open/close, ensuring that each eye sees the full display intended for it. Symptoms of cross-talk and/or color artifacts can indicate need for adjustment. The Dark Interval range of adjustment depends on the vertical frequency of your source—the higher the frequency, the smaller the range.

NOTE: *See separate Using 3D in Mirage manual provided for more information.*

3D STEREO SYNC LOCKING — This option defines 1) whether or not the incoming stereographic 3D signal locks to the vertical sync output so that signals are synchronized, and 2) whether or not the 3D frames must be inverted, i.e. swapped left-with-right. The correct setting ensures that the projector's 3D display of left/right frames is synchronized with the rest of the 3D system components so that the intended eye sees left/right image data. Select the option corresponding to your 3D source connections and timing, and use only if the *Mirage 3D Stereo Sync Cable* is connected between the projector's GPIO port and a server. Keep this adjustment OFF (default) when you are not using the *Mirage 3D Stereo Sync Cable.*

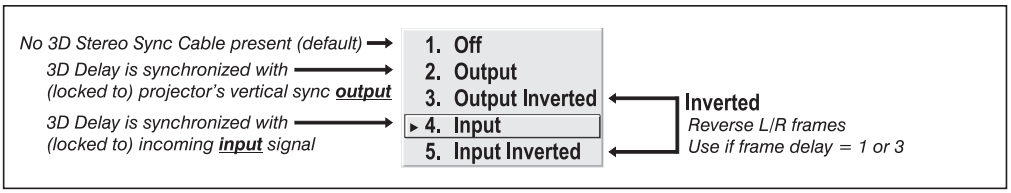

With your sync cable, Z-screen and, if desired, emitter connected as described in the *Using 3D in Mirage manual*, select the option suited to your 3D configuration (see above). If Frame Delay is 2 (or 0), do not invert; if frame delay is 1 or 3, invert. Generally, an "Unlocked" setting is synchronized with the incoming L/R signal rather than the vertical sync output, and may be needed only with multi-projector installations in which the vertical sync outputs vary.

NOTE: *See separate Using 3D in Mirage manual provided for more information.*

3D STEREO SYNC SELECT — Define which of the *Mirage 3D Stereo Sync Cable's* input connecters is routed from your server. Use only if the cable is present.

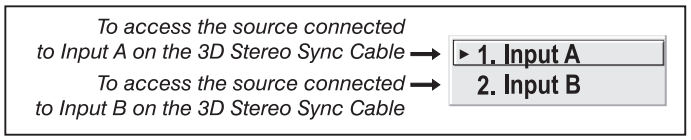

3D STEREO SYNC DELAY — Set when the L/R frames begin, defining the best reference point for synchronizing the display with your glasses. Proper adjustment of this delay should eliminate cross-talk and odd colors caused by timing differences between the glasses and the projected display. Use this slidebar only if the *Mirage 3D Stereo Sync Cable* is connected between the projector's GPIO port and a server. Slidebar values indicate the number of lines that are delayed.

FRAME LOCK ENABLE — This option allows the projector to control the output frame timing based on the input signal. The *locked* option forces (if possible) the output image to be phase locked to the input frames. *Rate Matched* means that the output runs at close to the input frequency but isn't locked to it so the output will drift in phase relative to the output. Free Run forces the output to run at a 60Hz frame rate.

NOTES: 1) *When enabled, the output is always locked to the primary source.* ***2)*** *See separate Using 3D in Mirage manual provided for a full explanation.*

WARP LATENCY — Requires optional *ChristieTWIST* module. See *ChristieTWIST User's Manual* provided with the module.

Advanced Image Settings continued — SUBMENU

MOTION FILTER — This control is most useful for smoothing out moving images from interlaced sources. In most cases the proper Motion Filter setting is automatically determined according to the type of incoming source signal. However, if your source is jittery and/or tearing you may wish to "force" a setting to ensure stable processing for this source—if desired, override the default "Auto" setting by selecting the appropriate motion filter:

1. **AUTO:** The projector will automatically use the correct motion filter according to the incoming signal.
2. **STILL:** For static images with no motion, such as graphics from a CD.
3. **MOTION:** For video images that did not originate from film, or for moving computer-generated images.
4. **FILM:** For video images that originated from film. This will optimize image quality and stability.

FILM MODE THRESHOLD — This setting determines how sensitively the projector can detect if an incoming video signal originated from film or not. It should not require adjustment.

DETAIL THRESHOLD —Use "Detail Threshold" to define at what frequency level the "Detail" control will begin to magnify high frequencies, which adds details back into the image. Raise the threshold to *ignore* more of these high frequencies, and lower the threshold to *magnify* more of these frequencies. A setting of "0", for example, means no noise will be ignored and all will be magnified. An ideal detail threshold is one in which high frequencies that are causing objectionable noise are *not* magnified when using "Detail", but frequencies which can help sharpen an overly-soft image are magnified.

3.7 Adjusting System Parameters and Advanced Controls

Use the *Configuration* menu to define general operating parameters and communications with other projectors and equipment, and to access other advanced processing and image adjustments affecting overall performance. In addition, the *Configuration* menu provides access to diagnostics, calibration tools and the *Service* submenu (password-protected).

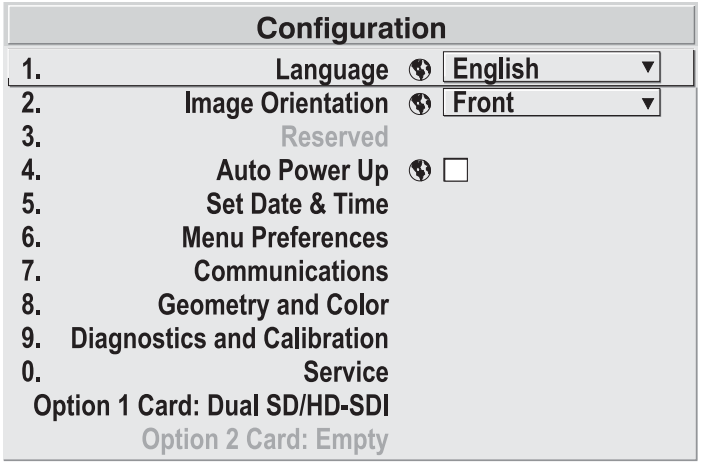

Keep in mind that settings in the *Configuration* menu (and its submenus) are typically "global" settings applied regardless of the type of source your are using. This characteristic is identified with the (globe) icon alongside the option.

NOTE: *The* ***Configuration*** *menu is recommended for experienced users/technicians only.*

System Configuration — GENERAL —

The first six options in the *Configuration* menu are explained below:

Language

Choose from available languages to use in the projector's menus. The change will take effect immediately.

Image Orientation

Set the orientation of the image according to the orientation of your projector. If the setting is incorrect, projected images will be reversed and/or upside down.

Reserved

No function.

Auto Power-up

Enter a checkmark to enable the projector to automatically power up after losing power due to a power failure or due to unplugging the projector during operation. Note that unsaved display adjustments may be lost.

Set Date & Time

Enter/read the current year-month-day and hour-minute-second. Changes here reset the projector's real-time clock.

Menu Preferences — SUBMENU

Adjust the appearance, content and/or location of on-screen menus and messages.

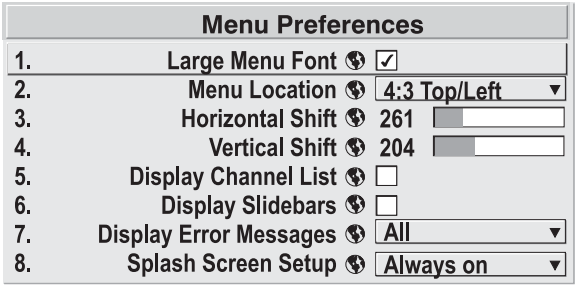

LARGE MENU FONT — Enter a checkmark to enlarge menus and their text. You may have to adjust "Menu Location" to accommodate the increased menu area.

MENU LOCATION — Use the pull-down list to choose a pre-defined default or customized location for the display of all on-screen menus.

To create a custom menu location quickly, choose a preset that is closest to the desired location. Then adjust "*Horizontal Shift"* and "*Vertical Shift"* slidebars to move the menu to the desired location. Avoid locations too close to a corner or edge to prevent cropping of larger menus.

HORIZONTAL SHIFT AND VERTICAL SHIFT — Shift your menus as desired, creating a customized menu location.

DISPLAY CHANNEL LIST — Enter a checkmark if you want to see a scrollable channel list whenever you press Chan from your presentation. Channels marked with a list icon in the *Channel Setup* menu will appear here. The "Display Channel List" option also enables on-screen feedback when using the Input key. If you prefer to hide the channel list and input dialog box while switching channels and sources during a presentation clear the checkbox.

NOTE: *The Channel List and input dialog box cannot be hidden during use of the menus.*

DISPLAY SLIDEBARS — Enter a checkmark to superimpose a small slidebar over the current image whenever an adjustable parameter is selected directly with a key such as Contrast or Bright. If "Display Slidebars" is unchecked, these slidebars can still be

accessed, but will be hidden during adjustment. This option does not affect slidebars in menus.

DISPLAY ERROR MESSAGES — Choose how you want to be notified of errors detected in either the incoming signal or projector. Select "Screen" or "All" (default) to see brief on-screen messages. This is particularly recommended during setup or testing of the projector. Or select "Serial Ports" to receive messages via RS232 or RS422 serial communication only. To hide error message displays, such as during shows and presentations, select "Off" or "Serial Ports".

SPLASH SCREEN SETUP — Use the Splash Screen to choose when you would like to display a special introductory splash screen image, such as your company logo, graphic or message.

- Always Off = A splash screen never appears
- Always On = A splash screen is always on behind the current display image, similar to wallpaper.
- Startup Only – The splash screen logo appears at projector startup only.
- Startup And No Signal – A splash screen appears at startup only if there is no source signal.

To replace the default "Christie logo" splash screen (or other) with one of your own, use *KoRE Librarian* to download the desired .bmp to the projector. This will overwrite the current splash screen content in projector memory.

System Configuration — COMMUNICATIONS —

Settings in the *Communications* submenu define and control how single or multiple projectors are linked with each other and with a controlling device. See Figure 3.18.

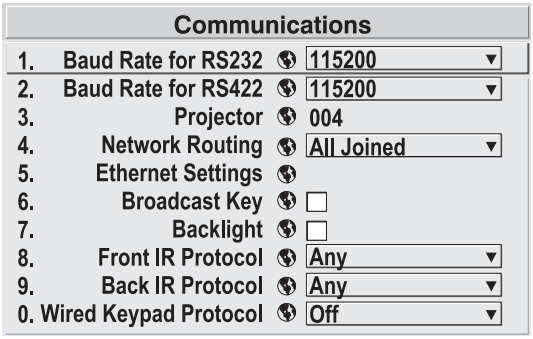

Figure 3.18. Communications

Baud Rates

The baud rate setting determines the speed of communication to and from the projector on the RS232 or RS422 links. The maximum rate for the RS232 is 115200; for RS422 it is 19200. Set the baud rate to match that of your controlling device, such as your PC. If you are unsure about what baud rate to choose, refer to the documentation for the controlling device. In an existing network of projectors, if you discover that a projector has a different baud rate, make sure to use the pull-down list and select the correct baud rate using the ↵ key—do not just scroll this control with ◄ or ► keys. Serial communication is always 8 data bits, no parity.

Projector

Enter a three-digit number (such as "001") to assign or change a number to the projector currently in use. If the current projector already has a number assigned, that number will appear here (for example, "004" in Figure 3.18, above). Numerical identity for projectors enables you to communicate with a single projector within a multiple-projector application (see also Proj key in *3.3 Using the Keypads*). If you make a mistake in assigning or changing the projector number, press Exit to cancel.

NOTE: *When multiple projectors are being used and you want to adjust the color and edge blending settings for individual projectors to create one seamless image, you must assign different numbers for each projector to allow toggling back and forth between projectors while adjustments are being made.*

Network Routing

NOTE: *Not applicable for stand-alone projectors or simple serial networks with only one type of controller and linking.*

▸ 1. Separate	= Networks do not communicate with one another
2. RS232 and RS422 joined	= Serial networks are joined, but Ethernet is isolated
3. RS232 and Ethernet joined	= RS232 and Ethernet are joined but RS422 is isolated
4. All joined	= Network communications travel all networks

SEPARATE: Select "Separate" (factory default) to keep RS232, RS422 and Ethernet messages on their respective paths instead of being broadcast to the other types of ports. In Figure 3.19A, RS422 controls only the projector to which it is connected. In Figure 3.19B, either RS232 or RS422 will control the network.

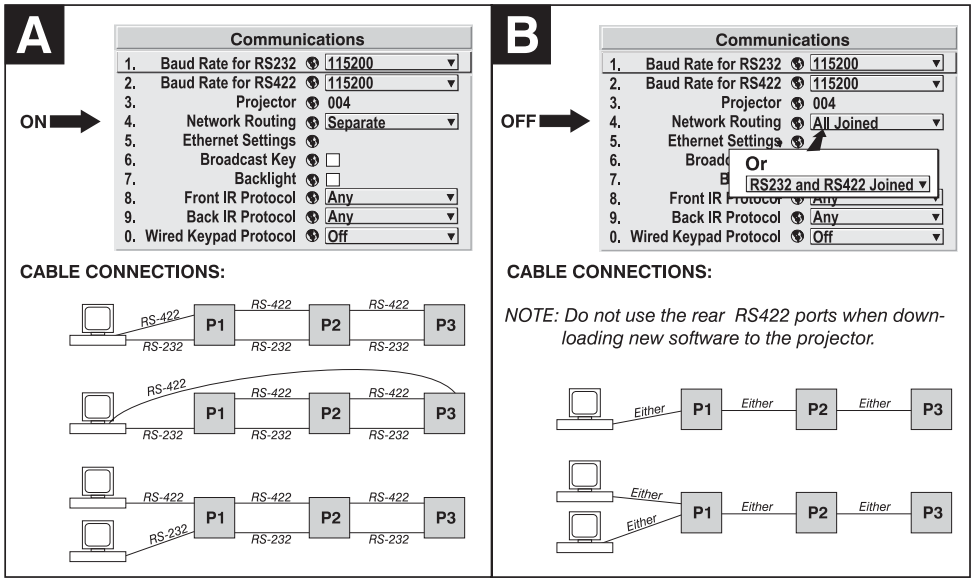

Figure 3.19. Using the "Network Routing" Option

RS232 AND RS422 JOINED: Messages originating from an RS232 or RS422 controller will be relayed to all RS232or RS422 ports. Any Ethernet communication, however, will not.

RS232 AND ETHERNET JOINED: Messages to and from the RS232 ports will also be relayed to the Ethernet port, and vice versa. Any RS422 communications will be isolated.

ALL JOINED: All messages reach all ports, regardless of type.

Ethernet Settings (SUBMENU)

NOTE: *Recommended for network administrators only.*

DHCP: Enable this checkbox if you want a DHCP server to automatically change the projector's default IP address (0.0.0.0) to one that is valid and unique for use on the current Ethernet network. On networks without a DHCP server, or to simply override the automatic DHCP server function, delete the checkmark and enter the new "IP Address" settings desired. Remember that only a 0.0.0.0 address will trigger the DHCP addressing service, and only when the DHCP checkbox is enabled.

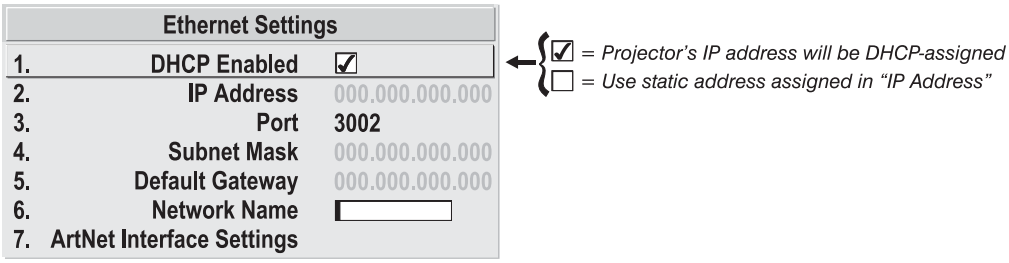

IP ADDRESS: Enter a valid and unique IP address for use on the network to which the projector is currently connected. This address will overwrite any previous IP address such as the projector's factory-defined default (0.0.0.0), or one that has been assigned by a DHCP server or other user. It takes approximately 10 seconds for the projector to respond at its new address.

PORT: On some Ethernet networks, firewall restrictions may require that the port number of the projector be changed from its default of 3002. If so, enter a new valid port number here. It is highly recommended not to use a port# below 1000, as these ports are typically reserved for and used by common IP applications.

SUBNET MASK AND DEFAULT GATEWAY: The Subnet Mask and Default Gateway are automatically assigned when DHCP is enabled. If a static IP is being used, the IP must be assigned first since the projector estimates the subnet mask after the IP is entered. The Default Gateway is an optional router device used to send and receive data outside the subnet.

ArtNet Interface Settings — SUBMENU

ArtNet is an Ethernet communication protocol that was developed by Artistic Licence. It is used for controlling lighting/staging equipment from a lighting console or PC application. It is based on the popular DMX512 control protocol.

ArtNet SUBNET: This is the highest level address for a device. Typically it is set to 0.

ArtNet UNIVERSE: Each packet of data is broadcasted to all devices plugged into a universe (up to 512 devices/channels).

ArtNet CHANNEL: There are 512 channels per universe. This control allows you to specify the starting channel for this projector.

ArtNet ADVANCED MODE: When this setting is enabled, each projector listens for data on 64 channels starting with the base channel. When advanced mode is not in use, the projector only listens on 10 channels. You can squeeze more devices per universe when the projector uses fewer channels.

NOTE: *The additional 54 functions are not currently implemented and are reserved for future use.*

ArtNet BASE CHANNEL: When advanced mode is enabled, the projector listens to data on 64 consecutive channels, or 10 consecutive channels when advanced mode is not enabled. The projector processes requests that come on either 10 or 64 consecutive channels beginning with the 'base channel' defined here. The requests implement the following functions:

DMX Channel	Function	Value	
Base	Shutter	0 – 64 65 – 192 193 – 255	Open No Action Closed
Base + 1	Slider Lock	0 – 254 255	Locked Unlocked *
Base + 2	Input *	1 – 8	Input #
Base + 3	Channel *	1-99	Channel #
Base + 4	Lens – Vertical * †	0 1 – 254 255	Lens Down Stop Lens Up
Base + 5	Lens – Horizontal * †	0 1 – 254 255	Lens Right Stop Lens Left
Base + 6	Lens – Focus * †	0 1 – 254 255	Negative Focus Stop Positive Focus
Base + 7	Lens – Zoom * †	0 1 – 254 255	Zoom Out Stop Zoom In
Base + 8	Power *	0 1 – 254 255	Power Off No Action Power On
Base + 9	None		

** Functions are only active when the Slider Lock is set to Unlocked*
† Lens functions have no effect on the Roadie 25k

NOTE: *It is important to make sure the channels* ***DO NOT*** *overlap another device.*

Example:

Good	Bad
Proj1_Base = 0	Proj1_Base = 5
Proj2_Base = 10	Proj2_Base = 9
Proj3_Base = 20	Proj3_Base = 11

DEVICE NAME: This option is used to name each device. Some ArtNet servers support querying for devices.

DEVICE DESCRIPTION*:* More information that is returned when a "device query" has been done.

Broadcast Key

Enter a checkmark if you want keypad commands sent to one projector to be relayed to all projectors in a serial network. Note that the (Proj) key will temporarily "override" the effect of a broadcast setting and allow you to control a specific projector when necessary. Disable the setting for all but one (any) projector in a network.

Backlight

Toggle to turn the built-in keypad backlighting on and off.

Front IR / Back IR

As needed for your application, set to “any” so that the front and/or rear IR sensor locations on the projector respond to the IR keypad. Set to “off” to disable.

To disable *both* IR sensors, you cannot use the IR remote keypad to select the second **OFF** setting. This safeguard prevents accidentally disabling an IR keypad while you are using it. Instead, use either the built-in keypad or a wired remote (optional) to set the remaining active sensor to **OFF**. The projector will no longer respond to an IR remote keypad.

NOTE: *Protocols **B – G** are used for rental staging applications.*

Wired Keypad

The wired keypad is ON by default to when connected to the rear of the projector. The projector will then respond to incoming commands from this port. To disable the wired keypad, you must use a different keypad—the built-in or an IR remote keypad—to select “off”. This safeguard prevents you from accidentally disabling the wired keypad during use.

System Configuration
— GEOMETRY & COLOR —

In the *Configuration* menu, select the *Geometry and Color* submenu when you need to modify overall color performance and/or image geometry for all sources.

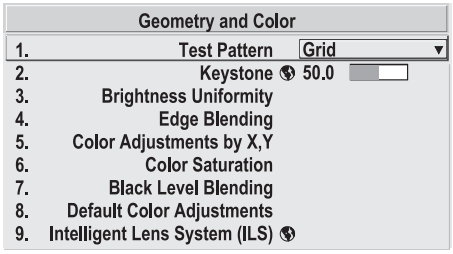

* ***Keystone and Warping*** *if ChristieTWIST warping module is present (standard in Matrix models, optional in all others).*

Test Pattern

Choose the desired internal test pattern, or select OFF to turn off a test pattern. Alternatively, use the (Test) key for cycling through test patterns.

Keystone

NOTE: *If the optional **ChristieTWIST** module is installed, this option is **Keystone and Warping**, and activates a submenu for defining custom image shapes. Please refer to documentation included with your Christie TWIST module.*

Use to correct a keystoned image shape in which both sides of your image are inclined toward the top or bottom edge (see Figure 3.20). Tilting the projector in relation to the screen typically causes keystone, so that the lens surface and screen are no longer parallel to each other.

Figure 3.20. Keystone Adjustment

Brightness Uniformity — SUBMENU

Brightness Uniformity provides further refinement of displays already matched for their primary colors and overall light output. Use Brightness Uniformity to create an exceptionally smooth image in which no area appears brighter and/or more red, green or blue than another. In the *Brightness Uniformity* menu, enable the "Uniformity Enable" checkbox to access a multitude of adjustments for critical color light output control in specific areas throughout the image. Your settings apply as long as the "Uniformity Enable" checkbox is enabled and you are using a "User" color temperature defined by the Brightness Uniformity controls. To disable the Brightness Uniformity function, delete the "Uniformity Enable" checkmark.

NOTES: 1) *See also* ***3.10, Using Multiple Projectors*** *for the complete step-by-step procedure for achieving uniform brightness in adjacent displays.* ***2)*** *If Christie TWIST module is installed, the enable checkbox changes to a list giving the option to choose from several different uniformity maps. Please refer to documentation included with your Christie TWIST module.*

Edge Blending — SUBMENU

The *Edge Blending* submenu provides a range of controls for smoothing together the overlapping bright edges of multiple adjacent projected images to create a single larger "seamless" image. These controls, which primarily affect whitelevels, are typically used in conjunction with mechanical lens blinders (optional), which are installed on the front of the projector and which primarily affect blacklevels.

NOTES: 1) *There is a centerline (both horizontal and vertical) in the Edge Blending test pattern. The intersection of these lines is the true center of the projector's display area.* ***2)*** *See also* ***3.10, Using Multiple Projectors****.*

Color Adjustments by X/Y, and Color Saturation — SUBMENUS

NOTES: 1) *For defining or changing a User 1, 2, 3, or 4 color performance or "gamut". Sometimes known as Comprehensive Color Adjustment™.* ***2)*** *Factory-defined primary color levels, which ensure a specific color performance from projector-to-projector, can be calibrated in the* ***Service*** *menu only. If you suspect alteration of these defaults, the factory settings can be recovered with selection of "****Reset to Factory Defaults?****" in the* ***Color Primary Settings*** *submenu accessed via the* ***Service*** *menu (password-protected).*

From the factory, the projector can utilize any of the 3 pre-defined color performance settings identified at right (default=Max Drives), or colors can be driven on the basis of color temperature (Figure 3.21). For most applications, one of these gamuts will produce accurate and realistic colors from a variety of sources. They can be applied at any time in the *Advanced Image Settings* menu ("Select Color Adjustment"), and are not adjustable.

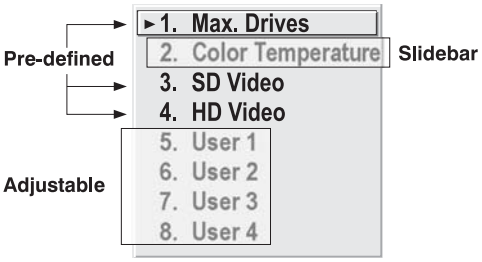

Figure 3.21. Color Gamut Choices

DEFINING "USER" COLOR GAMUTS: In some cases, you may find that none of the pre-defined "Select Color Adjustment" options exactly suit your needs. For example, you may require a unique color gamut (range) for a single projector or application, or you may need to precisely match colors across multiple adjacent displays. In such cases, use the *Color Adjustments by X,Y* or *Color Saturation* submenu to define the precise

hue of each primary color component (red, green, blue, and white) used to generate the millions of colors produced in displays. You can create up to four custom color gamuts (User 1, 2, 3, or 4) with these adjustments.

Note that the two menus differ only in their user interface, so use whichever menu best suits your needs and application. A color meter can help with adjustments.

- *Color Adjustments by X,Y* — Enter known x/y coordinates from the chromaticity graph.
- *Color Saturation* — Adjust color slidebars and judge image color by eye or meter.

A user-defined color "adjustment" can be applied by selecting it in the *Advanced Image Settings* menu ("Select Color Adjustment").

COLOR ADJUSTMENT BY X,Y: Use this submenu if you want to create, alter or copy a color gamut (i.e., "color adjustment"). Controls in this menu define the precise hue of each primary color component (red, green, blue, and white) used to generate the millions of colors produced in displays (Figure 3.22). The x/y coordinates for each color define its location on the standard CIE chromaticity graph (see Figure 3.23)—changing either or both of these numbers will change the hue of the color, and relocate the "triangle" for possible colors. For example, changing the x/y coordinates for red may move the color closer to orange or closer to violet, which will in turn affect all displayed colors having a red component. Adjust the slidebars or enter new specific coordinates as desired to define or change up to four "User" color gamuts needed for your environment and applications. Apply at any time in the *Advanced Image Settings* menu.

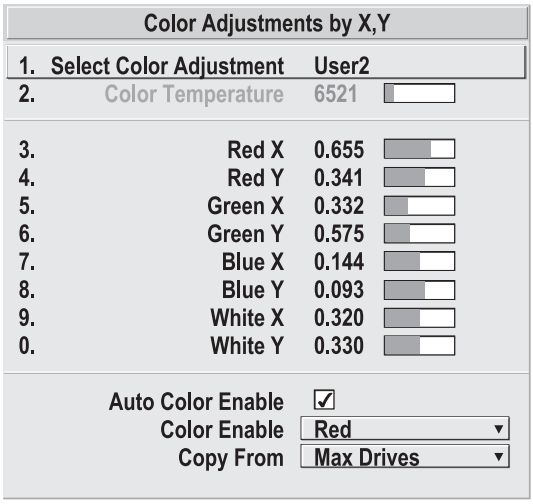

Figure 3.22. Customize Color

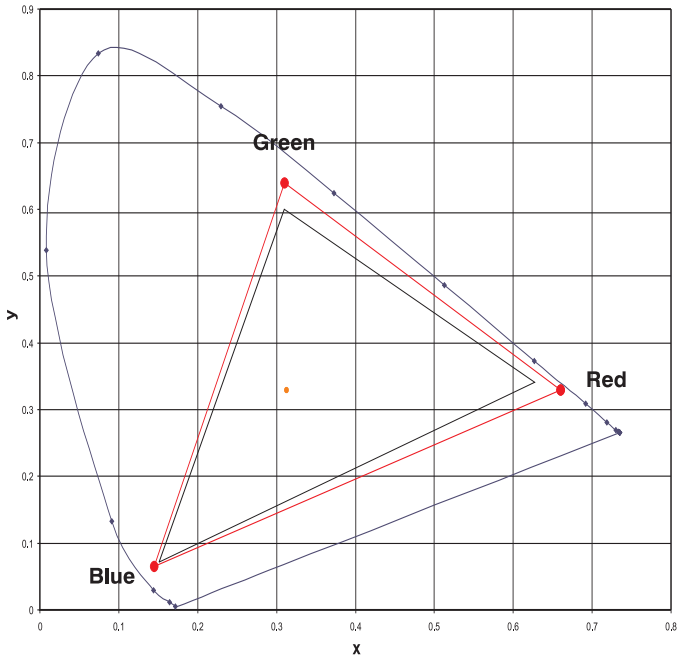

Figure 3.23. CIE 1931 Chromaticity Diagram

NOTE: *Keep new x,y coordinates within the original color gamut triangle shown here.*

PROCEDURE FOR X,Y ADJUSTMENTS: *See **3.11, Using Multiple Projectors**.*

COLOR SATURATION: Use this submenu if you do not have specific color coordinates in mind and will simply judge color performance by eye or meter. Like the *Color Adjustment by X,Y* submenu, each color control actually defines new x/y coordinates for that color and changes its hue—it is just a different interface. Figure 3.24.

Adjust the hue of each primary color (red, green, blue, and white) by using more or less of it in relation to the other colors.

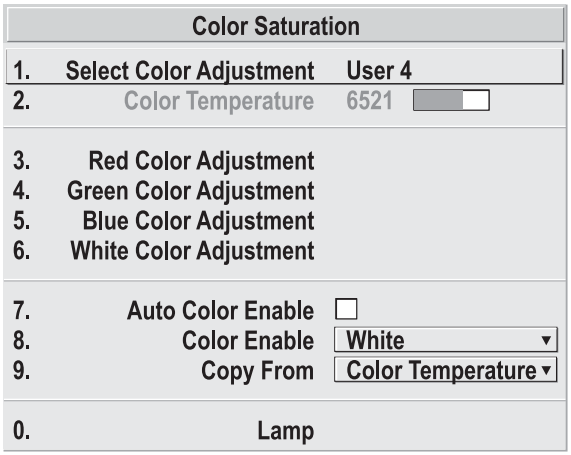

Figure 3.24. Customize Color

NOTE: *A **Color Saturation** adjustment defines the corresponding x/y coordinates shown in the **Color Adjustment by X,Y** submenu. These x/y coordinates will remain stable for this User gamut until they are changed again via either menu. Values displayed in the **Color Saturation** menu, however, will likely fluctuate as you use the projector, and will be different when you return to this menu at some point in the future. These floating changes do not affect the x/y coordinates or gamut.*

Black Level Blending — SUBMENU

Black Level Blending is a feature that eliminates the differences between black levels when edge blending multiple projectors. The Black Level Blending submenu

provides many controls to allow the edges of adjacent images to be smoothly overlapped creating a "seamless" image. Edge blending smoothes white levels, and if edge blending is not in use, Black Level Blending is disabled. Black Level Blending provides a simple solution for uneven black levels, without the need for external hardware, by matching up black level hues with a "target area" hue (the intersection of the center lines), and adjusting the overlaps (edges) surrounding the target area.

NOTES: 1) *Refer to section* ***3.10, Using Multiple Projectors*** *for additional information.* ***2)*** *There is a centerline (both horizontal and vertical) in the Black Level Blending test pattern. The intersection of these lines is the true center of the projector's display area.* ***3)*** *Adjust white levels before adjusting black levels.* ***4)*** *Blinders are recommended for fixed installations.*

Default Color Adjustments — SUBMENU

Refer to ***System Configuration – Geometry and Color, Color Adjustments by X,Y*** for description.

Intelligent Lens System (ILS™) — SUBMENU

ILS™ provides the ability to recall focus, zoom and positioning settings specific to each source input. This allows the projector to display multiple aspect ratios correctly sized and positioned on the same screen. It's useful when working with a variety of source types that might differ in size and/or aspect ratio since the custom lens settings you've chosen for any source will be quickly and accurately applied when you select that source. Place a checkmark in the checkbox to enable ILS™. If no calibration has previously been done you may be prompted to do a full calibration. If a motion calibration has been done, you will be prompted to complete a reference calibration. If both calibrations have been done, the checkbox will be checked and ILS™ enabled. If ILS™ is enabled, a reference calibration will be done on power up and the lens will return to the saved position of the source that is active at the time of power up or to the position the lens was located when it was powered on. Further adjustments to the zoom, focus and position will be automatically saved for source the selected source. If you switch to a source with different lens settings and switch back, the lens will automatically move to your desired settings upon return. Other sources can be used without using ILS™

NOTES: 1) *See* ***System Configuration – Diagnostics/Calibration, ILS Calibration*** *for further details about calibration.* ***2)*** *ILS™ control is a preference setting and will be retained between power cycles.*

System Configuration
DIAGNOSTICS / CALIBRATION

Test Pattern

Choose the desired internal test pattern to display, or select OFF to turn off a test pattern. Alternatively, use the (Test) key for cycling through test patterns.

NOTE: *There is a center line (both horizontal and vertical) in the Edge Blending test pattern. The intersection of these lines is the true center of the projector's display area.*

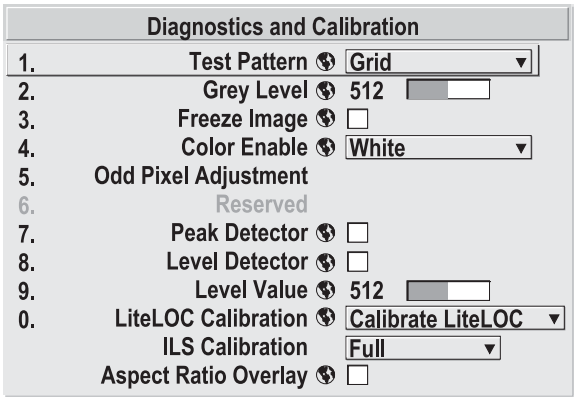

Test Pattern Grey Level

Set the desired level of grey for displaying in the full gray field test pattern.

Freeze Image

Enter a check mark to freeze (stop) an image on a single frame. This diagnostic tool is useful if you need to examine in detail a still version of an incoming image that cannot be "frozen" at the source. For example, in moving images it is sometimes difficult to observe artifacts such as external deinterlacing/resizing and signal noise. Remove the checkmark to return back to normal.

Color Enable

Select which color or colors you want to see. This is useful while working with color temperature, input levels or other special setup parameters. Colors can also be enabled/disabled by entering the corresponding function code listed on the back of the standard remote keypad.

Odd Pixel Adjustment

NOTES: 1) *Factory-set and rarely required by user.* ***2)*** *Source must be >90 MHz.*

When using certain RGB sources, you may need to adjust the normal gain or offset of odd pixels in relation to even pixels. This will smooth out very narrow (1-pixel wide) "checks" or vertical stripes that indicate adjacent "on" and "off" pixels. Using the Level Detector simplifies this process (see Figure 3.25):

1. Use an external analog native-sized continuous grayscale test pattern with at least 256-levels.
2. Turn "Level Detector" on.
3. Set "Level Value" to ***~200***. The image should now be black-and-white (or black-and-one color, if you use "Color Enable" function).
4. Adjust ***offset***. Half of the pixels will move, the other half will not.
5. Adjust until the two transition regions overlap. The stripe of noise will be minimized, defined by the value in the slidebar.
6. Set "Level Value" to ***~800***. The image should now be black-and-white.
7. Repeat Steps 4 and 5, but adjusting ***gain***.
8. Repeat Steps 3-7 for all remaining colors. Your RGB source should now be OK.

Two sets of values are automatically saved with these controls—one value for Input #1, and one for Input #2 (analog). The current set of values depends on which source is in use. This enables a source to be processed correctly via 2 different inputs.

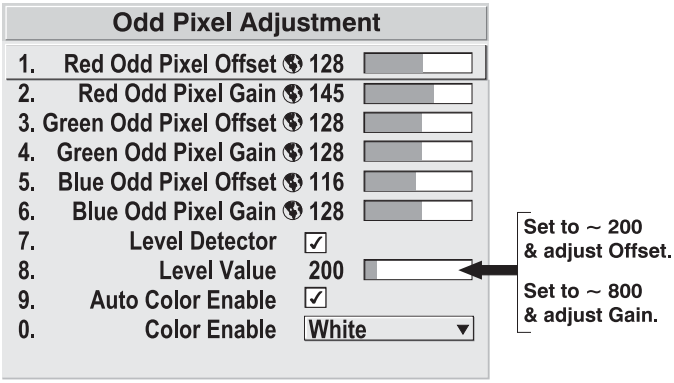

Figure 3.25. Using "Odd Pixel Adjustment"

NOTES: 1) *Adjust offset before gain, since offset affects gain.* ***2)*** *A value of 128 represents no change in normal odd pixel offset or gain.* ***3)*** *Odd Pixel Adjustment eliminates "1 pixel on, 1 pixel off" artifact only, not any type of larger artifacts.*

Reserved

No function.

Peak Detector

The "Peak Detector" is a fast method for defining individual input levels, and can improve the accuracy of input levels set by the Auto Input Level function. Enabling the "Peak Detector" activates a special operating mode for detecting ***only*** pixels that are considered black or white—all other levels are displayed as a mid-level gray. When used with a 16-step grayscale pattern in which the two black and white bands are known to be at opposite edges of the image, you can watch these isolated areas while adjusting individual blacklevels and input drives until both bands are just visible. Images from this source will then display correct blacks and whites without crushing or washing out.

NOTE: *If using Peak Detector with PIP, both images must have the same color space.*

Level Detector

The "Level Detector" checkbox enables specific thresholds for blacks and whites—input levels that fall below a specified *Level Value* (see below) are displayed as black, and all others are displayed as white. It aids in Odd Pixel Adjustment. To use:

1. Enable "Level Detector" and display a continuous grayscale.
2. Set "*Level Value"* to near black (such as 200).
3. Adjust Offsets to minimize area of black stripe.
4. Set "*Level Value"* to near white (such as 800).
5. Adjust Gains to minimize area of white stripe.

Level Value

Level Value defines the value to be used by the Level Detector in recognizing blacks and whites. See *Level Detector*, above.

LiteLOC™ Calibration

NOTES: 1) *LiteLOC™ Calibration takes up to two minutes. 2) For best results, allow the projector to warm up for 15 minutes prior to calibration.*

LiteLOC™ Calibration defines the range of power needed to maintain lamp brightness. Select *Calibrate LiteLOC* for calibration using your projector's unique specifications (recommended) rather than standard specifications. The projector will revert to the default back-up in the event of a power failure.

Intelligent Lens System (ILS™) Calibration

This option allows you to choose between three types of lens calibrations. *Reference calibration* determines a reference point that is used as a defined starting position for relative motion of the lens. All positioning is measured from this reference point. A *reference calibration* is lost when power is removed from the projector and will occur on every power up as long as ILS™ is enabled. A *motion calibration* determines the characteristics of each motor and values are saved in the projector's memory. If ILS™ is enabled and a *motion calibration* has previously been done, the projector will automatically recall these settings from memory when it's being powered up and a *motion calibration* will not take place. A *full calibration* performs both a *reference* and *motion calibration.*

Aspect Ratio Overlay

Selecting this option with a checkmark will overlay a number of common aspect ratio boxes on top of the source image. This is very helpful during the setup of the projector and can be turned off after desired specifications have been achieved.

System Configuration
OPTIONAL INPUT MODULES

The two "Option Card" entries In the Configuration menu identify which optional input modules (a.k.a. cards) are present at INPUT 5 (Option 1) and INPUT 6 (Option 2).

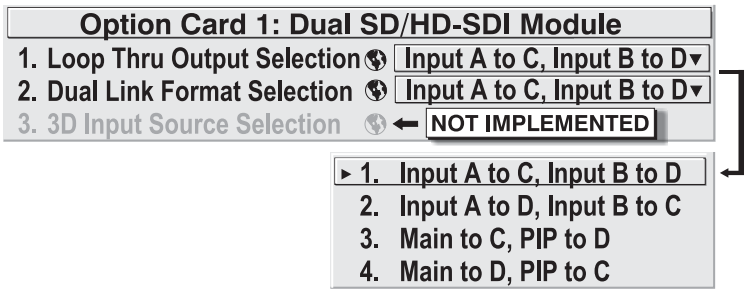

If either of these option slots is empty, the corresponding read-only menu entry does nothing. If there is a module installed, the corresponding menu entry may activate a submenu of further options pertaining to that module.

For example, on *Roadster* models the *Dual SD/HD-SDI* module is factory-installed at **INPUT 5** (Option 1). The Option 1 Card submenu provides controls for configuring the various connections on this multi-input, multi-output module. As desired for your application, you can define 1) which physical input loops through to which output, and 2) which functional input (main or PIP signal) loops through to which output.

3.8 Working with PIP or Seamless Switching

PIP (Picture-in-Picture) and Seamless Switching are independent but related projector features that both utilize two image-processing paths within the projector. In the case of Picture-in-Picture, this double processing enables you to display two different images simultaneously – typically a smaller "secondary" image within a large "primary" background. In a seamless switch, the double processing essentially occurs between displays so that a full image relayed from one source can smoothly transform into a full image from another source. This change can be virtually instantaneous, or slowed as desired so that the current image appears to dissolve or "fade" into the new image.

Options for enabling and controlling PIP and Seamless Switching all reside in the same menu. Note, however, that because both features utilize the projector's double processing capability, PIP and Seamless Switching cannot be used together. For example, fading a pair of PIP images into a new display from a different source is not possible.

For best PIP or Seamless Switching results, use two *different* signal types* as defined below. Do not mix two signals of the same type.

Signal Type	Description (Input Location)
#1	5 BNCs (RGBHV or YPbPr)
#2	DVI - I (analog or digital)
#3	Decoded signals (Input 3, Input 4, Composite video, S-Video, or any video signal via Input 1 BNC connectors or via an analog option card).
#4	Analog Option Cards
#5	Digital Option Cards
#6	Digital Option Cards

* *HD interlaced sources are not recommended for the PIP window.*

Other PIP or Seamless Switching tips to keep in mind include:

- When using 2 digital signals or 1 analog and 1digital, each must be ≤ 165 megapixels.
- When using two analog signals, each must be ≤ 90 megapixels.
- Avoid using an interlaced source in the PIP window
- Seamless switching may affect image quality in some cases

Working with PIP

NOTE: *To control the primary image, access all picture controls through the Main menu. To control the secondary (PIP) image, access picture controls through the Picture-in-Picture and Switching menu.*

Use the first of six options in the *PIP and Switching* menu to enable and define how you want to use PIP.

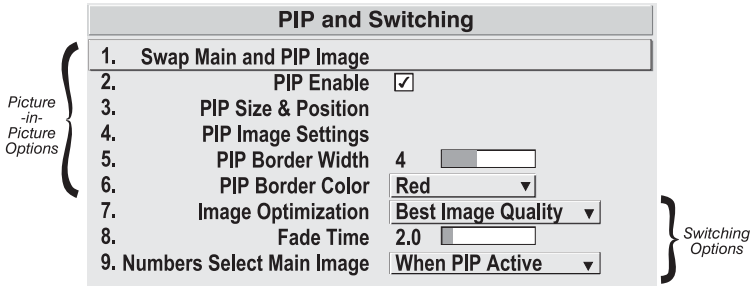

Swap Main and PIP Image

Toggle the current picture-in-picture relationship so that the primary (main) image becomes secondary (PIP), and the secondary image becomes primary. Swapping is available only when PIP is enabled.

NOTE: *There may be a slight delay when swapping the Primary and Secondary images.*

PIP Enable

(**Short cut:** Press PIP on the Remote) if menu not present.

Toggle to display from two sources at once (Picture-in-Picture) or the primary source only. This checkbox turns the secondary source on and off.

NOTE: *Disable PIP and Best Switching for Interlaced sources > 35kHz.*

PIP Size and Position – SUBMENU

Most controls in the *PIP Size and Position* menu adjust the PIP (secondary) image in the same fashion as their counterparts in the main *Size and Position* menu adjust the main image—see ***3.6, Adjusting the Image*** for details. Exceptions are:

PIP Size and Position		
1.	Position Presets	Bottom Right ▼
2.	Size	0.729
3.	Vertical Stretch	1.090
4.	Pixel Track	858
5.	Pixel Phase	0
6.	H-Position	360
7.	V-Position	262
8.	Aspect Ratio Presets	Anamorphic ▼
9.	Reserved	
0.	Advanced Size and Position	

POSITION PRESETS –Set the location of the PIP (secondary) image in the display.

ASPECT RATIO PRESETS – Choose the desired aspect ratio for your PIP window. A "Default" aspect ratio matches that of the projector, whereas "Anamorphic" will be a widescreen window. Choose according to your incoming source material.

PIP Image Settings — SUBMENU

Adjust the PIP (secondary image) without affecting the size or position. The primary image remains unchanged. See ***3.6, Adjusting the Image*** for details

PIP Border Width

Set the desired line thickness for your PIP window border.

PIP Border Color

Select the desired color for the PIP window border.

NOTES: 1) *Numbers 7 and 8 on the Picture-in-Picture and Switching submenu control switching parameters.* ***2)*** *Disable PIP in order to work with Seamless Switching.* ***3)*** *Disable PIP and Best Switching for Interlaced sources > 35kHz.*

Working with Seamless Switching

Seamless Switching is the ability to instantly and/or smoothly switch sources, and is controlled with options 7 and 8 in the *PIP and Switching* menu. To use Seamless Switching, PIP must be disabled.

Tips for best source switching:

- Make sure a channel has been configured for each source.
- Progressive digital and analog sources are recommended
- Set Image Optimization to Seamless Switching (see below).
- For best results, use the same frame rate and gamma setting for each.

NOTE: *Avoid using two Interlaced sources.*

Image Optimization

Use this setting to choose what is more important, image quality or switching between sources. Selecting *Best Image Quality* will ensure your image is always proper however when switching sources, the screen will go blank increasing your switching time. *Smooth Switching* allows for a cleaner transition between sources. The image will fade from one image to another according to the *Fade Time* control. *Seamless Switching* overrides the *Frame Lock Enable* settings and forces the output

to run at 60Hz regardless of the input signal. Image is 100% seamless when switching sources.

NOTE: *Disable PIP and Best Switching for Interlaced sources > 35kHz.*

Fade Time

Set how long (in seconds) it takes to gradually dissolve one image into another for a source switch. Fading is available for single-image "best" source switching only—PIP cannot be in use, and Image Optimization must be set to Best Switching.

NOTE: *PIP must be disabled for Fade Time to take effect. Also, the PIP window must be closed to activate it.*

Numbers Select Main Image

Use *Numbers Select Main Image* to use the numeric keys #1-8 as input keys. This remapping of the keypad (see right) can be particularly useful with PIP displays, providing a convenient shortcut for changing the primary (background) image without first having to return to the *Main* menu. To use the keys in this manner all of the time, even with single displays, select *Always*. For normal keypad function, select *Never* (default). Set to *When PIP Active* to activate number keys only when PIP is in use.

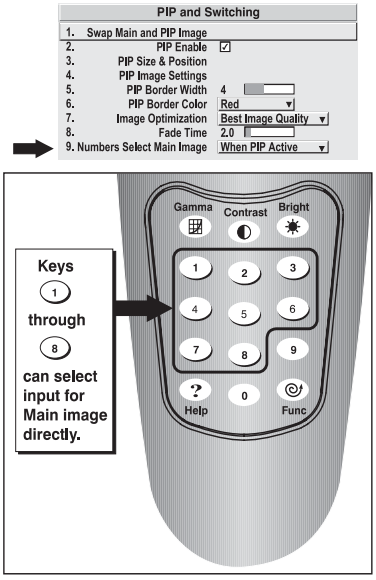

NOTE: Numbers Select Main Image *keypad functionality works only when menus are closed.*

3.9 Working with the Lamp

Whenever you install a new lamp in the projector, access the *Lamp* menu to record the lamp serial number in the projector's memory. You can also choose a lamp mode for regulating power and light output, change optical aperture size (if present), and access other read-only information pertaining to past and present lamps.

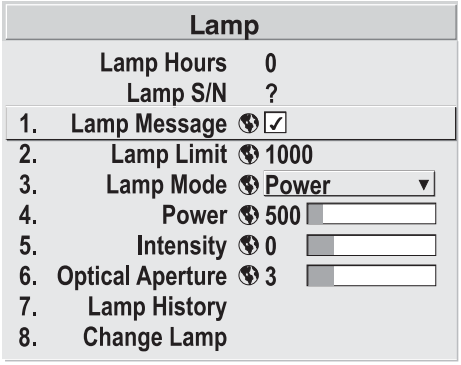

LAMP HOURS (read-only) shows the number of hours logged on the current lamp. Whenever you record a new lamp serial number this value automatically resets to "0", where it begins to log time for the new lamp. This information also appears in the *Status* menu.

LAMP S/N (read-only) is the serial number recorded for the current lamp. When you install a new lamp and enter its serial number, the number will appear here.

Enter a checkmark for **LAMP MESSAGE** to enable a warning message that will appear upon power-up when the lamp has reached the specified lamp limit and should be replaced. Delete the checkmark to prevent display of this message—instead, when your lamp expires, only the status display messages on the back of the projector will provide the visual warning to replace the lamp.

NOTES: 1) *It is recommended that the Lamp Message checkbox remain enabled.* ***2)*** *When a lamp warning message appears, press* EXIT *to temporarily cancel the message. The message will continue to appear upon power-up until you install a new lamp.*

Set **LAMP LIMIT** to the number of hours you expect to log on the current lamp before replacing it. This will trigger a lamp message on-screen (if enabled).

NOTES: 1) *If you change modes over the life of a lamp, the lamp limit you originally expected may no longer be possible.* ***2)*** *Turning the lamp on and off repeatedly reduces lamp life significantly, as do other factors, such as hot re-striking.* ***3)*** *It is recommended that Lamp Limit not exceed the warranted lamp life, otherwise a lamp could become dangerously fragile with overuse.*

Set which **LAMP MODE** you want to use in order to control the light output (see Figure 3.26). You can choose to run the lamp as bright as possible (i.e., always using maximum power—this is the default). Alternatively, power the lamp with a specific wattage appropriate for the installed lamp, or set a desired intensity (brightness) to maintain. Although there are exceptions, generally higher light output or higher power settings can shorten lamp life.

Figure 3.26.

Use the lamp mode that best suits your brightness needs. For example, in a tiled application you may want to precisely match brightness levels between adjacent images—judge by eye and set each individual **Lamp Power** setting as necessary. Or you may always want images to be as bright as possible—choose **Max Brightness**. Keep in mind that higher lamp power settings can shorten lamp life.

Lamp modes are described below:

- **Max Brightness:** The lamp will always burn as brightly as possible, driven by 100% of the power level rating for the installed lamp (see ***Section 6, Specifications***). Keep in mind that the "maximum brightness" for any lamp gradually diminishes with age—images will become dimmer over time. Its current output level appears in the "**Intensity**" option (*not* in lumens).

- **Intensity:** Brightness will remain close to a specified level for as long as possible. Once you select this option, enter a number representing the intensity level (brightness) you wish to maintain—the projector will automatically adjust power as needed to maintain this intensity as closely as possible. Note that the intensity value is a correlation only and does not represent an actual lumens level. See "**Intensity**" below.

- **Power:** The power supplied to the lamp will remain at your specified wattage level. Once you select this option, enter the number of watts representing the power level you wish to maintain. See "**Power**" below.

POWER - This slidebar and number indicates how many watts are applied to the lamp. You can apply anywhere from approximately 60% to 100% of the lamp power rating. Set for the number of watts as desired, keeping in mind that lower power levels produce dimmer images. When in either **Power** or **Max Brightness** modes, the power level remains constant. Specifying a maximum power level here is the same as operating in **Max Brightness** mode.

NOTE: *Power level can be set only if the lamp is in* ***Power*** *mode.*

INTENSITY – This value and slidebar represents the current brightness of your lamp, decreasing over time when you are operating in **Max Brightness** mode or at a specific **Power** level. When you are operating in "**Intensity**" mode, this value remains at the original "**Intensity**" setting chosen and cannot be adjusted.

NOTE: *The number shown for "intensity" is not the actual lumen output, but rather a correlated value only—1246 may represent 3500 lumens, for example.*

To use "**Intensity**" mode, judge by eye or meter and set the level as desired for your application. Over time, the projector will automatically increase the power supplied to the lamp as needed to maintain the chosen intensity as closely as possible. This mode is known as "Brightness Tracking" or "LiteLOC™".

HOW LONG CAN I MAINTAIN BRIGHTNESS? Software can maintain your **Intensity** setting until the required power reaches the maximum rating for the lamp. The lower the setting, the longer it will take to reach this threshold, and the longer you can maintain the desired brightness. Keep in mind that once the lamp power reaches its *maximum* wattage (see "**Power**", above), this tracking is no longer possible. At this point, the lamp will gradually begin to dim as usual, even though your original "**Intensity**" value will still appear in the menu. To resume accurate tracking, reduce the intensity setting so that the resulting "**Power**" value is less than its maximum—the lower the intensity, the longer it can be maintained.

For example, a 1000-watt lamp can be driven at no more than 1000 watts. To produce desired brightness at the screen, a new lamp would likely need less than this maximum rating—perhaps 812 watts (example only). Over time, however, the lamp will require more and more current in order to generate the desired light, until eventually the lamp wattage reaches its 1000-watt maximum and the lamp power automatically levels off. At this point, the tracking function terminates (i.e., the power level stabilizes) and the lamp will begin to dim normally. Either reduce your "**Intensity**" setting or replace the lamp.

Do not lower the "**Intensity**" so much that the corresponding **Power** value reaches its *minimum*—the intensity setting will be inaccurate and cannot be maintained. For best results in achieving uniform intensity amongst tiled images, choose an **Intensity** setting that enables all lamps to operate at less than the maximum number of watts available in your projector but high enough to keep the corresponding lamp power above its minimum. See "**Power**", above.

NOTES: 1) *Lamps become more stable over time, thus a specific intensity is more easily maintained as the lamp ages.* ***2)*** *Intensity can be set only if the lamp is in "Intensity" mode* ***3)*** *Intensity cannot exceed the output of Max Brightness mode.*

LAMP HISTORY - This read-only option lists the lamps most recently installed and recorded in the projector. *Lamp History* automatically updates whenever you record a new lamp serial number—the new lamp is added to the bottom of the list.

Lamp History	
S/N	Hours
1234	1999
5678	27

Use **CHANGE LAMP** to record the serial number for a newly installed lamp:

In the *Lamp S/N* window, use the number text entry keys to record the new lamp serial number and press ↵ again to accept the change (see Figure 3.27). See *Using Slidebars and Other Controls* if you need help entering the number. Once entered, the new lamp serial number will be added to the *Lamp History* menu and the *Lamp Hours* timer will reset to "0". *Lamp Mode* and *Lamp Limit* remain as they were for the previous lamp and can be changed at any time.

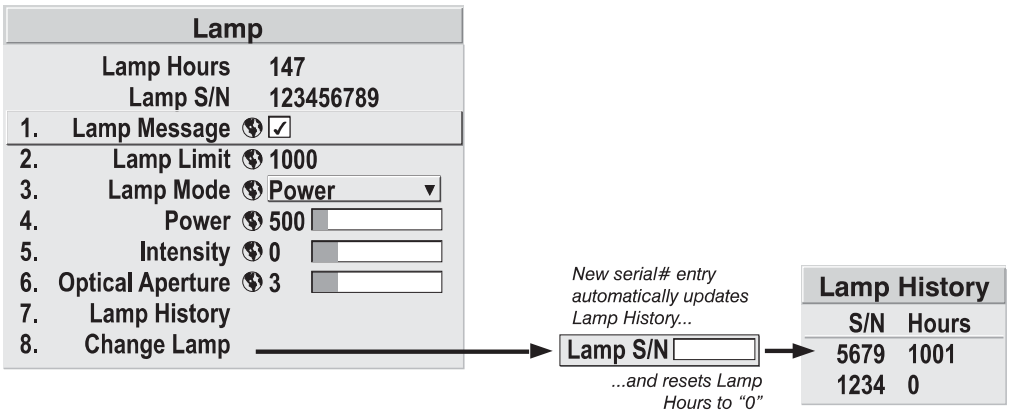

Figure 3.27. Recording the New Lamp Serial Number

NOTE: *Enter a serial number* ***only*** *if you have just installed a new lamp. This will help ensure that lamp timer is not reset on an old lamp and that the number of hours logged on the lamp will be accurate.*

⚠ IMPORTANT ⚠

ALWAYS record the serial number of a NEW lamp.

How Old is the Lamp?

When a new lamp is installed and its serial number recorded by selecting "Change Lamp" in the *Lamp* menu, the lamp timer resets to "0" and begins logging time for the new lamp. This tally appears in both the *Lamp* menu (see right) and the *Status* menu.

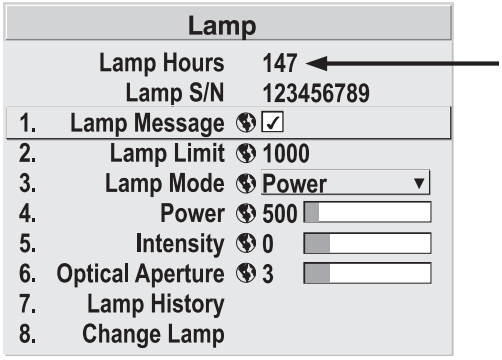

To review the number of hours logged for previous lamps, consult the *Lamp History* menu.

When to Replace the Lamp

If the "Lamp Message" checkbox has been enabled in the *Lamp* menu (recommended), an expiry message will appear upon power-up when the lamp has reached its defined "Lamp Limit".

In addition, the LED's next to the built-in keypad will flash "LP" when lamp time has expired. The lamp should be replaced.

The "Lamp Limit" setting should not exceed the warrantied lamp lifetime, as an old lamp becomes increasingly fragile and more prone to sudden failure.

See also ***4.4, Replacing the Lamp & Filter*** and ***Section 6, Specifications***.

3.10 *Status* Menu

The read-only *Status* menu lists a variety of details about the standard and optional components currently detected in the projector. Refer to the *Status* menu for versions of hardware and software installed, the type (size) of lamp defined in projector memory, and hours logged in total and for a specific period (such as a rental period), and for your projector model name and serial number. In addition, the *Status* menu identifies the current channel, its location, its frequencies and other details.

Scroll the full *Status* menu using ▲ ▼. Use ◀ ▶ for page up/down.

3.11 Using Multiple Projectors

When an installation requires multiple projectors, you can use the RS232 serial ports to daisy-chain the units together and control the group with a single keypad or a computer/controller connected to the first projector. In such a network, you can choose to broadcast commands to the entire group, or use the Proj key as desired to limit responses to an individual projector.

Alternatively, you may want to add projectors to a hub on an Ethernet network. See ***2.6, Connecting Multiple Projectors*** for full routing details.

NOTE: *Refer back to* ***3.7, Adjusting System Parameters and Advanced Controls*** *for complete information about communicating with multiple projectors.*

Matching Colors In Multiple Screens

In a multiple-projector wall, you will likely want to precisely match color and intensity from image-to-image so that the full wall is as uniform as possible. This matching is typically done in conjunction with brightness uniformity and edge blending.

Preliminary Calibration

As a final part of the manufacturing process, all primary colors in the projector are precisely set to pre-established values to ensure that overall color performance is optimized and is as accurate as possible (refer back to Figure 3.23). Upon installation at a site, however, lighting and other environmental factors may slightly change how these colors appear on your screen. While the change is negligible in most cases, you may prefer to recover the originally intended color performance before trying to match colors from several projectors. Or you may be renting a projector in which the colors were corrected for use at its previous site, but are not ideal for yours.

The recommended first step in achieving such consistency is to use a color meter to measure the native primary colors—red, green, blue, and white—as they appear at the screen and record these as *Color Primary Settings* in the *Service* menu (password-protected) for each projector. On the basis of these new values, which are stored in memory, each projector will then automatically calculate any necessary corrections to reproduce the original factory colors under the current environmental conditions. This essentially calibrates a projector to its surroundings, compensating for factors such as screen type; lamp and/or ambient lighting that can alter the final color characteristics on-screen, and will improve color accuracy and consistency in a group of projectors. It ensures a good starting point for further customizing and matching; however, is not critical for all installations.

To return to the factory-set color primaries, such as when a projector is moved to different site, you must access the *Service* menu (password-protected). Select the *Reset to Factory Defaults?* option in the *Color Primaries* submenu. Then repeat the calibration process describe above, if desired, and continue with matching of colors.

Color Adjustment Procedure

Once the *Color Primary Settings* are calibrated for the site (see above), use the *Color Adjustments by X,Y* or *Color Saturation* menu to further refine each projector's fundamental colors so that the hue and intensity of each color appears the same from one display to another. Once matched, you will have created a single new shared range of colors or "color gamut" that all of your projectors can produce. This palette—named User 1, 2, 3 or 4—can be applied or disabled for a source at any time throughout a bank of adjacent displays, simplifying both the setup and maintenance of a "seamless" wall.

1. Set up and optimize all projector settings. You can ignore color temperature, since you will be redefining color performance in this procedure, but do optimize each projector in every other aspect. Closely align all screen edges.

2. Assign projector numbers to make communications easier. Use desired keypad.

3. Use the same lamp mode for all projectors, and do the following:

   - Set *Select Color Adjustment* to "Max Drives"
   - Display a full white test pattern
   - Adjust lamp power and Optical Aperture (if available in your projector) until adjacent white fields appear the same brightness.

4. Display the *Color Adjustments by X,Y* menus for all projectors. Each menu shows the x/y coordinates defining the "Max Drives" color gamut for this projector. Write the values shown in any one of the displays. See Figure 3.28. Or use the "Copy From" function to copy them into a "User" gamut in one projector.

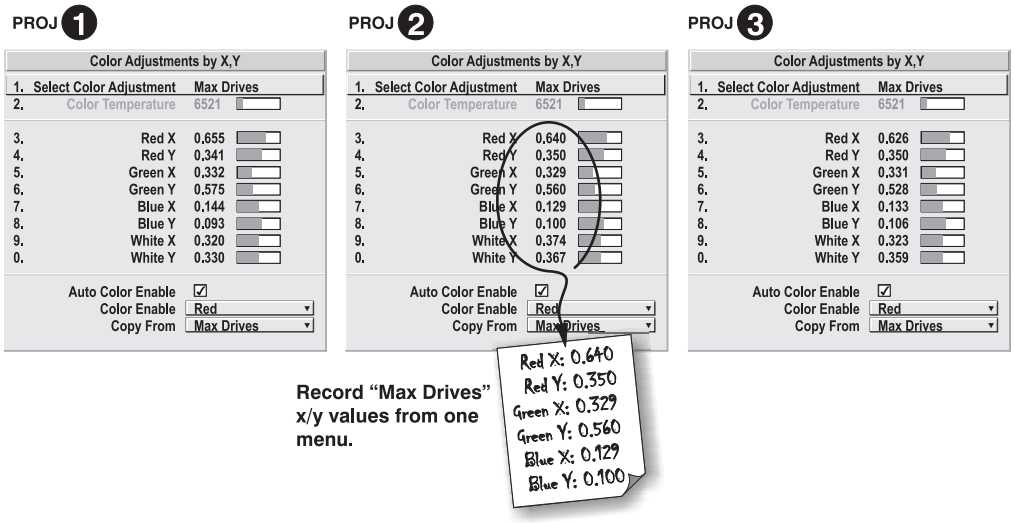

Figure 3.28. Jot Down a Set of "Max Drives" X/Y Values

5. In each projector, select a "User" color adjustment (1-4) to enable *Color Adjustments by X,Y* changes. Then enter your recorded x/y values into each menu (Figure 3.29).

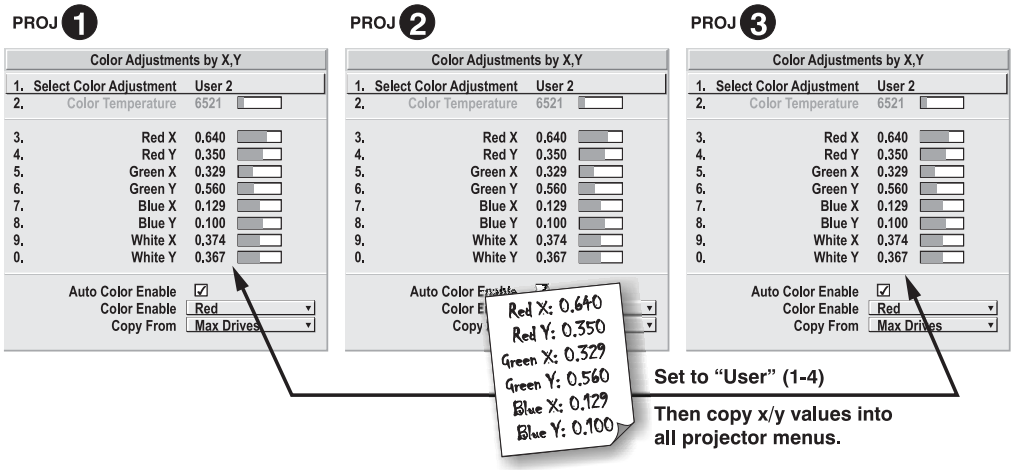

Figure 3.29. Copy X/Y Values into All Projectors

6. In each projector, judge by eye and adjust x/y coordinates slightly in the following manner:

   - To match reds, decrease "Red X" until full field red screens match.
   - To match greens, decrease "Green Y" until full field green screens match.
   - To match blues, increase both "Blue X" and "Blue Y" until full field blue screens match.

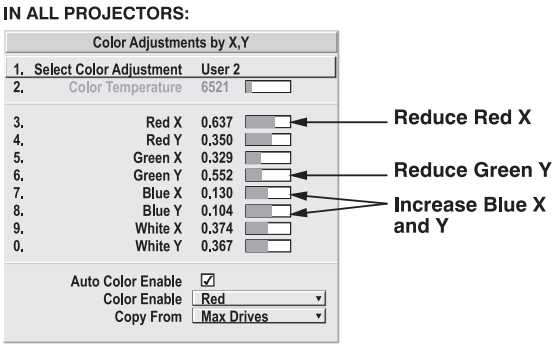

NOTE: *For speed, enable the "Auto Color Enable" checkbox. Each color coordinate you select will then automatically trigger a full field display of the corresponding color.*

Alternatively, use the Color Saturation menu for these adjustments or to fine tune.

These coordinate adjustments move the three color points closer together (refer back to the chromaticity chart shown in Figure 3.23) to establish a "shared" gamut attainable by all projectors in your group. Adjust only as necessary to ensure that the resulting color palette is as large as possible. When done, you may need to adjust lamp power slightly.

7. All screens should now be color-matched and the will remain matched upon exit from the menus. Apply this new "User" gamut to a source at any time by selecting it in the "Select Color Adjustment" list accessed in the *Advanced Image Settings* menu.

Using the Color Saturation Menu for Color Matching

You may prefer to use the *Color Saturation* menu to match colors across multiple screens. In the three *Color Adjustment* submenus (Red, Green, Blue—see Figure 3.30), set all main values to 100 and the secondary values to 0. Then judge by eye and adjust the slidebars as needed. Note that adjustments here define new x/y coordinates in the *Color Adjustments by X,Y* menu.

For best results, use this menu after doing the color adjustment procedure.

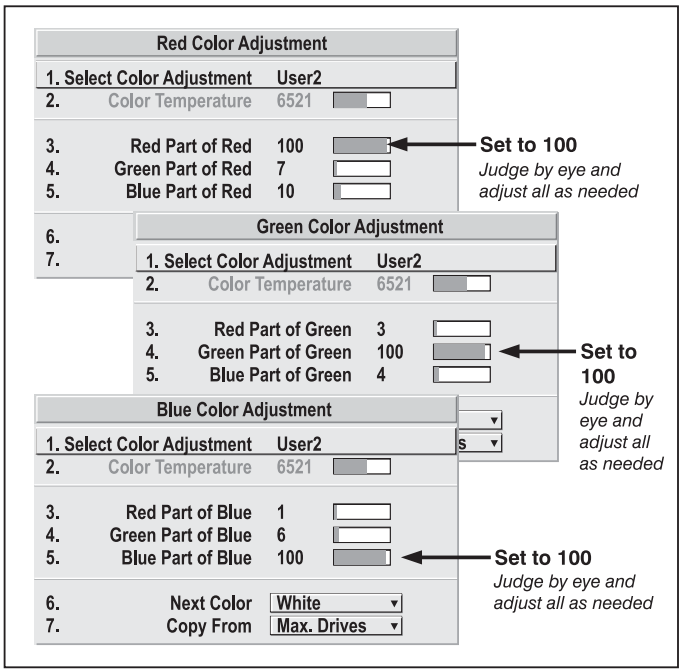

Figure 3.30. Color Matching Using Color Saturation Menu

Achieving Brightness Uniformity

WHAT IS BRIGHTNESS UNIFORMITY? When used to refine screens already matched for their primary colors (see *Matching Colors in Multiple Screens*, above) and overall light output, proper adjustment of *Brightness Uniformity* can create an exceptionally smooth screen in which:

- no area of the screen appears more red, green or blue than another
- no area of the screen appears brighter than another
- color and light output from one screen closely matches adjacent screens

Although the *Brightness Uniformity* control can be used for a stand-alone projector, it is particularly useful for setting up and maintaining tiled images that form a cohesive display wall in which the color "cast" and light output appear uniform throughout each image as well as throughout the entire wall. The procedure provided here assumes a multiple-screen application.

⚠ *Before You Begin*

Read through the entire procedure before attempting to adjust Brightness Uniformity controls, and keep in mind the following checklist of prerequisites and guidelines:

- ❑ **ADJUST COLORS FIRST—**Always adjust the primary colors as described in the "*Matching Colors in Multiple Screens*" procedure (above) before attempting to work with Brightness Uniformity. This ensures that primary colors, color temperature, and maximized light output are all well matched from one screen to another. These matches are needed before you can achieve good Brightness Uniformity results.
- ❑ **RUN LAMP FOR 100 HOURS—**Light output and Brightness Uniformity can vary significantly during the first 100 hours of lamp use. For best results with

new lamps, either set up Brightness Uniformity after this period, or do an initial setup and re-check at 100 hours.

- **SET LAMP POWER—**Make sure each "Lamp Power" setting is as high as possible for your application while still maintaining a good overall match of light output from screen-to-screen. By nature, achieving a *uniform* brightness will require a slightly reduced *overall* brightness—this reduction will help ensure that you have enough range of adjustment when examining brightness variables more closely from screen-to-screen, and will help prevent premature "maxing out" when trying to match to a certain color, zone or projector.
- **USE A "USER" COLOR TEMPERATURE—**Always adjust Brightness Uniformity for a *User* color temperature defined when you matched primary colors, and continue to use it for all sources displayed on the wall. Your other color temperatures will not necessarily be matched from screen-to-screen.
- **WHITE UNIFORMITY SLIDEBARS—**White Uniformity slidebar values may not reduce to "0". Each slidebar adjusts overall light output in a specific screen zone, but the value shown represents the current setting for *green* in this zone. When other "hidden" values (red or blue) are lower than green, during adjustment in the White Uniformity menu their values will reach "0" first, causing the slidebar to stop earlier than expected.
- **JUDGE BY EYE OR USE A METER—**Good brightness uniformity can be achieved with either.

Step 1: General Setup

1a) Adjust primary colors (see *Matching Colors in Multiple Screens)* to ensure matched overall color temperatures and light output between screens.

⚠ IMPORTANT ⚠

Double-check that all WHITES and LIGHT OUTPUT are well-matched.

1b) Enable the *Brightness Uniformity* checkbox. This will enable access to the uniformity controls and will apply the settings to your image.

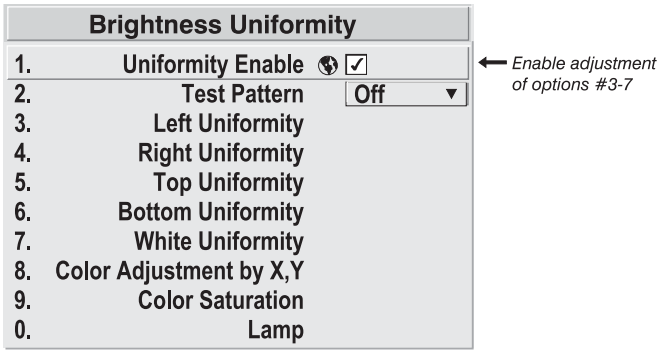

1c) Select the 13-Point test pattern for display. This pattern provides 9 screen "zones" with 13 targets.

FOR BEST RESULTS: Rather than examining the CENTER of each zone when assessing Brightness Uniformity adjustments focus on extreme EDGES as indicated in the illustration at right.

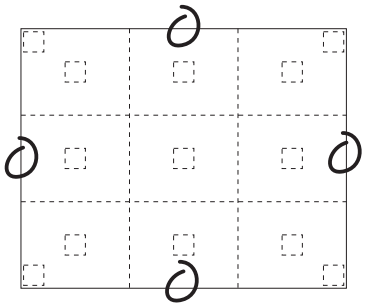

1d) In either *Color Adjustments* menu, select a "User" color. Then:

- ***If you have created a "User 1"*** color gamut (recommended) for a well-matched wall, continue to Step **1e**.
- ***If you prefer maximum brightness*** rather than a particular color temperature, select "Max Drives".

⚠ IMPORTANT ⚠
Do not change User 1 Color Adjustment in color-matched applications!

1e) In the *White Uniformity* menu, set the "Overall" output level to **50.0** and all remaining slidebars to **0.0**. This decreases the light output *just enough* throughout the screen so that any color level can then be *increased* later as necessary for matching light output from zone-to-zone. Do not exceed **50.0** for "Overall"—a higher level will likely interfere with achieving brightness uniformity and is not recommended.

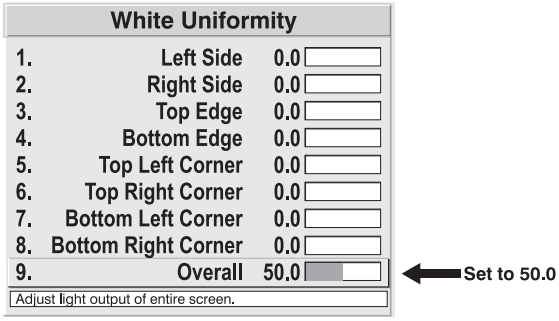

Ensure that overall light output remains well-matched from one screen center to the next. Where necessary, increase or decrease Lamp Power slightly to recover center matches.

Step 2: Adjust Color (level of red/green/blue) in 8 Zones

NOTES: 1) *At this point, ignore the* ***brightness*** *of individual zones.* ***2)*** *Always ignore menu colors.*

2a) On each screen, compare the color temperatures in the 8 target zones (4 edges and 4 corners) to that of the color temperature of the center. Compare using a ***white*** field only, and take note of any areas that do not match the center. Also decide if any screen exhibits a more obvious color shift than other screens—begin with this screen in Step **2b**.

2b) Return to the *Brightness Uniformity* menu. Beginning with the screen that exhibits the most obvious color shift(s), for each edge that exhibits a noticeably different color temperature from the center, select the corresponding *Uniformity* adjustment menu—*Left*, *Right*, *Top* or *Bottom*. For example, if any part of the left side is too blue, too red or too green, go to the *Left Uniformity* menu and adjust the colors (i.e., change their light output) until all portions of the left side closely match the center color temperature. Adjust an edge first (focusing on its center), and then adjust its corners. See Figure 3.31.

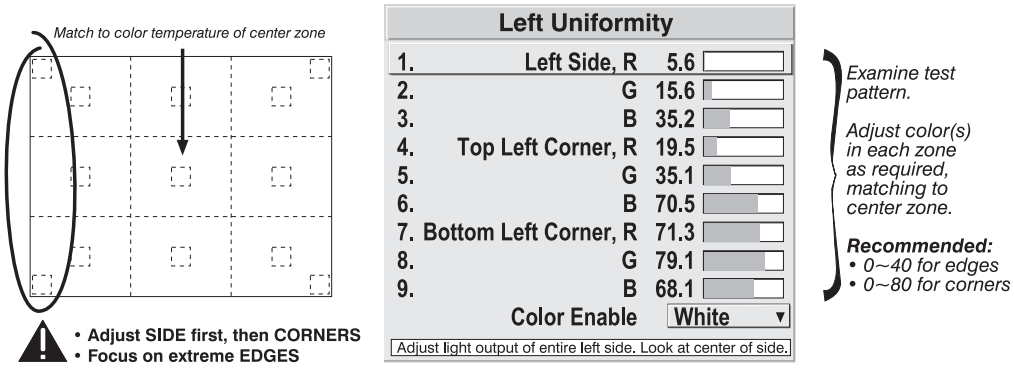

Figure 3.31. Match Zones to Center Color Temperature

Repeat the color adjustment of sides and corners for each edge of the screen that does not yet match the center (note that each corner is adjustable in either of its two adjacent "side" menus). When done, all areas of a given screen should match. Repeat Steps **2a** & **2b** for all remaining screens.

Step 3: Adjust Light Output in 8 Zones

3a) For each screen, compare the light output of each *edge* and *corner* to that of the *center*. If any of the areas differ, use the *White Uniformity* menu to match edges and corners to the center as described below (see Figure 3.32). Begin with the screen exhibiting the most obvious variations in light output.

- Adjust **edge** *White Uniformity* first—note that each edge adjustment also affects the rest of the screen slightly. Keep all edges just slightly *lower* than the center light output rather than matching light output precisely. Otherwise, it may not be possible to brighten the corners (typically the dimmest areas of the screen) enough. I.e., the best uniformity is a compromise between the brightest and darkest areas of the screen.
- Adjust **corner** *White Uniformity* last—each corner adjustment affects only this quadrant.
- Repeat for each screen.

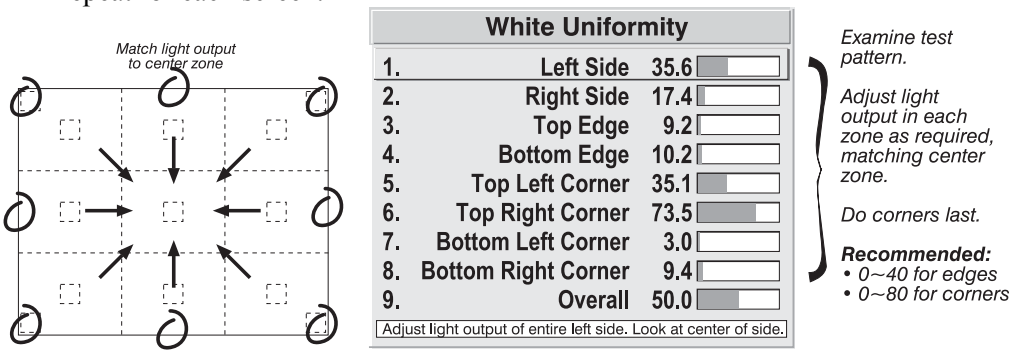

Figure 3.32. Match Zones to Center Light Output

Step 4: Readjust Color Temperature (level of red/green/blue) in 8 Zones

4a) Return to Steps **2a** & **2b** and, if necessary, fine-tune the zones so that they all still exhibit a single color temperature.

Canceling Brightness Uniformity

If you do not want to use or apply Brightness Uniformity settings, delete the checkmark from the "Uniformity Enable" checkbox at the top of the *Brightness Uniformity* menu.

Edge Blending

Christie *Edge Blending* is an innovative set of software functions that can quickly and easily blend the edges of multiple adjacent full screen images to create a single seamless larger image.

What is a Blend?

In simple terms, a blend appears as a gradient strip along an edge of a projected image. It is darkest along the extreme edge of the image, and lightens nearer to the rest of the image (see Figure 3.33). This area runs along the edge of the projector's internal DMDs (display area); it cannot be located on interior pixels.

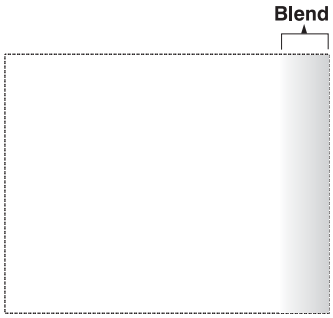

Figure 3.33

How Are Blends Used?

In multiple-projector walls, complementary blends between neighboring images can compensate for the extra "brightness" or intensity where these edges overlap. By controlling blend width and other properties, you can achieve uniformity across the group of images. Visible overlaps will disappear as illustrated in Figure 3.34.

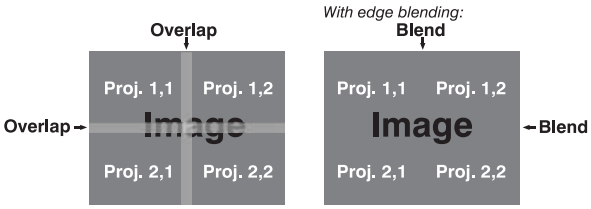

Figure 3.34. Edge Blending Concept
(NOTE: TILING DONE AT SOURCE)

For best results, use the same projector model and type throughout your display wall. In addition, avoid high-gain screens whenever possible—the optical performance of such screens demands minimal image offset, thus projectors must be located very close to one another. Note too that the requisite tiling of the image—with data repeated along internal edges that will overlap—must be correctly done by your source.

Flat Blends vs. Warped Blends

FLAT BLENDS: It is important to remember that the projector's standard edge blending controls affect the *outer edges* of the projector's display panel, and that each blend is consistent along its length (refer back to Figure 3.33). The standard *Edge Blending* menu controls can blend multiple *flat* full-panel displays if they have no warping or keystoning applied.

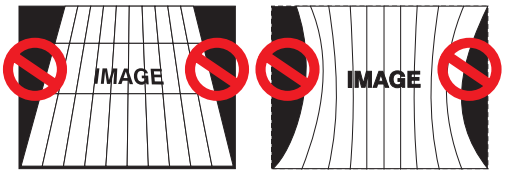

(Requires ChristieTWIST)

WARPED BLENDS: When using the optional *ChristieTWIST* module for warping images on to *curved* screens, work with its separate *ChristieTWIST* PC application to create more specialized blends required. Such a blend can vary along its length to compensate for curves. Once downloaded to the projector, simply apply the desired custom "user" blend by selecting it in the *Blending Enable* pull-down list.

Optional Blinders

If desired, you may wish to install the optional mechanical blinders at the projector lens. These adjustable blades help to blend blacklevels along edges of the image, and are available in a separate kit.

Since the *blinders* and *Edge Blending* menu controls are intended to complement each other, with blinders primarily affecting blacklevels and software primarily affecting whitelevels, together these components produce the best blends possible for any type of flat image. Or, depending on your projector model and your application needs, you may prefer to utilize only the standard software controls—for example, you may find that the edges of white or very light images can be well-blended without blinders. In other more unusual applications with only a very small area of overlap, you may need only the blinders.

Standard edge blending software controls are located in the 2-page *Edge Blending* submenu access via *Configuration* menu, then *Geometry and Color* submenu, then *Edge Blending*. The *More* option opens the second page of the *Edge Blending* submenu.

Main Functions

Use standard edge blending controls to set the precise *width*, *shape* and *midpoint* you need to blend overlapping edges together smoothly.

- **Blend Width** determines how much area is used for blending along an overlapping edge. Slidebar values represent the number of 8-pixel steps used for the blend. For example, a setting of "3" creates a blended edge 24 pixels wide. A setting of "0" signifies no blending. For best results in most applications, use a blend width of 16-48 steps (128-384 pixels).

  Ranges: 0-80 horizontal, 0-60 vertical.

- **Blend Shape** determines the rate of roll-off across the blend width, i.e. how quickly the white levels across the blend change from light and dark. Increasing the *Blend Shape* setting accelerates the rate of change at both extremes so that *less* of the region appears mid-gray (see Figure 3. 35). Decreasing the *Blend Shape* setting slows the rate of change so that *more* of the region appears mid-gray. For most applications, this subtle control is best left close to 50.

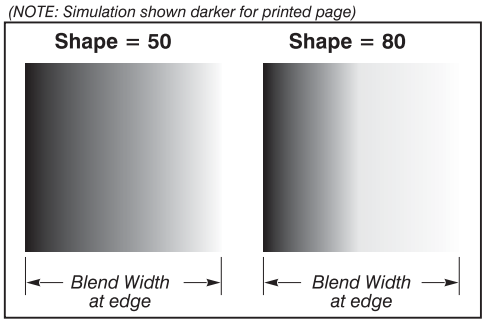

Figure 3. 35. "Shape" Examples

- **Blend Midpoint** determines the white level at the blend midpoint (the point equidistant between the beginning and end of the blend). Increasing the *Blend Midpoint* setting creates a blend that appears brighter than the rest of the image. Decreasing the *Blend Midpoint* setting creates a blend that is darker than the rest of the image. A setting of 50 means the midpoint is approximately 50% black—for best results in most applications, keep fairly close to this default (see Figure 3.36).

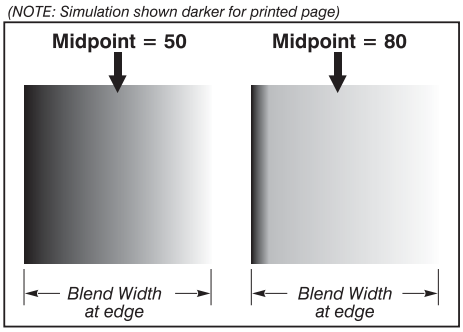

Figure 3.36. "Midpoint" Examples

- **Show Blending Overlap** turns your defined blend width area to solid gray so that simply overlapping their gray bars, if needed can seamlessly align two adjacent images. Toggle the *Show Blending Overlap* off to reactivate the blend effect.

  NOTE: *Show Blending Overlap appears as* ***Reserved*** *when ChristieTWIST is installed.*

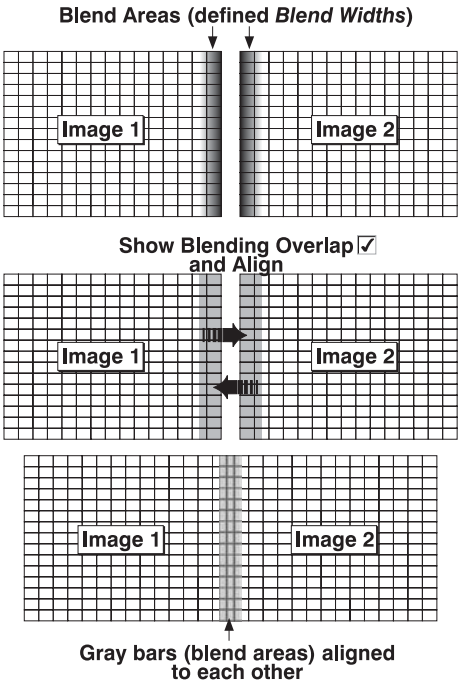

Other Functions

For convenience, the *Edge Blending* submenu also includes related options for enabling a specific color and/or test pattern, or for working with colors or the lamp. Such functions duplicate those provided elsewhere in the menu system.

Edge Blending Procedure

BEFORE YOU BEGIN: Make sure your source hardware and/or software can supply a *tiled* image for the number of projector in use, and that the tiling includes overlapping data of approximately 12.5-25% along shared edges (see Figure 3.37). Tiling not a projector feature.

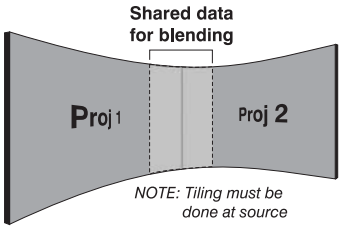

Figure 3.37. Tiling Example

Physically align the projectors and images from your intended external source, then match colors and Brightness Uniformity.

⚠ IMPORTANT ⚠

For a shared edge, the following *Blend* procedures and settings should be identical on BOTH projectors.

1. Start with 2 full-screen projector images overlapped by approximately 12/5%-25% each. Display full white field test pattern from both.
2. In the *Edge Blending* submenu, enable the top checkbox to activate all controls.

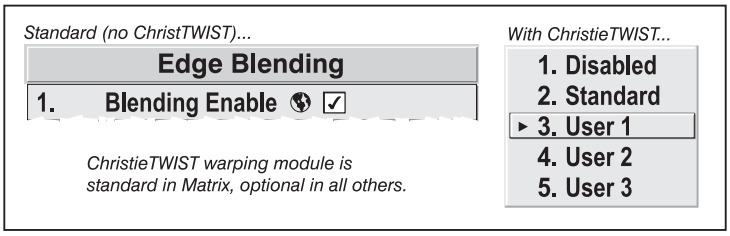

NOTE: *If the optional ChristieTWIST module is installed, a pull-down list replaces this checkbox (see right). Select the desired user-defined blend created for your current warp; no further blending at the projector is required. Or, to simply edge blending a non-warped flat image, select "Standard" and continue with Step 3.*

3. **SET STARTING POINTS FOR ADJUSTMENT (Figure 3.38)**:
   - Set all blend widths to 0.
   - Go to "More" and set everything in the *Edge Blending (2)* menu to 50.

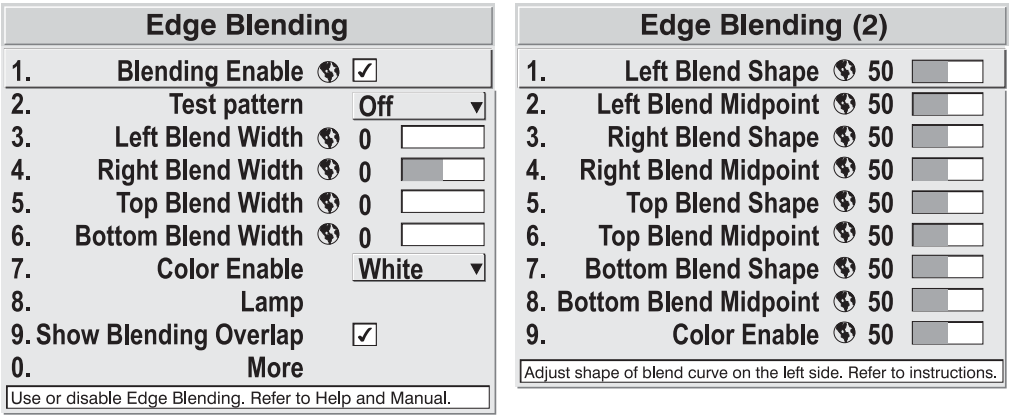

Figure 3.38. Set Starting Points for Each Projector

4. **SET BLEND WIDTH**: On one projector, increase the *Blend Width* for an overlapping edge (for example, if the projector's image is on left, its right edge overlaps the adjacent image—adjust *Right Blend Width*). Use the same setting on the second projector for this shared edge.
5. Re-adjust width (both projectors) until the overly bright band at the midpoint of the overlapping blends disappears or *just* changes to very light gray. For the shared edge, use the same *Blend Width* setting on each projector. If the best effect appears to be between two settings, choose the wider setting for both projectors.
6. **CHECK BLEND:** If the blended region appears too dark or light in relation to the rest of the image:
   - Increase *Blend Midpoint* in both projectors to "lighten" the overall blend, decrease to "darken" the overall blend.

- Adjust *Blend Shape* in both projectors to fine-tune change the amount of mid-gray intensity (as opposed to black/white) in the blend.

7. Repeat with remaining projectors / overlaps.
8. Check completed display wall with the desired external signal.
9. Adjust mechanical alignment if necessary to maintain perfect pixel-on-pixel alignment over time.

In applications where you are projecting only white or light images, the *Blend Width* may be slightly higher—set according to how much overlap you have between images.

- Recommended overlap is 12.5% - 25%

Black Level Blending

Similar to Edge Blending, Black Level Blending allows you to adjust the black level hues of multiple adjacent projected images to create one large seamless display. Edge blending must be enabled in order to use the Black Level Blending features.

Black Level Blending Procedure

NOTES: 1) *Adjust white levels before adjusting black levels.* ***2)*** *The zones in BLB menu correspond to the Edge Blend zones. If a given Edge Blend zone width is set to 0 (i.e. no blend on that side) then the corresponding BLB zone is disabled. It only becomes accessible when that Edge Blend zone is active.*

1. Start with 2 projectors. Select the black test pattern for both projectors from the *Geometry and Color* submenu.

2. In the *Black Level Blending* submenu, enable black blending by putting a checkmark in the checkbox for each projector.

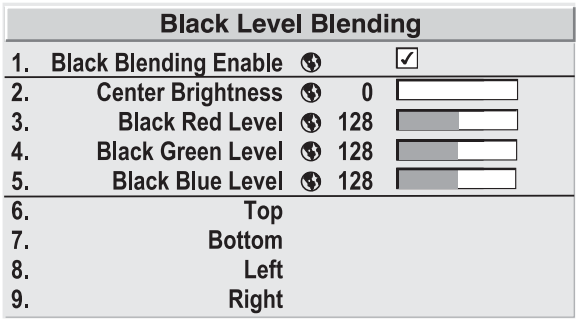

3. Working with one projector at a time, use the center brightness slide bar to adjust the center brightness (brightness of the non-blended region) so that the center intensity matches that of the brightest blended region (the center of all images when blending a 2x2 display is the target area).

4. Use the following three color slide bars, Black Red Level, Black Green Level and Black Blue Level, so the black hue of each projector matches.

5. You can choose which of the next four options, Top, Bottom, Left, Right, to use depending on which edge of the projector you are working with has been edge blended. The blend width can be adjusted to line up properly but by default it corresponds to the edge blending setting determined for that edge.

6. The brightness and black hues of the blended region can be adjusted in more detail in case fine-tuning is needed (may be only necessary for blending a 2x2 projector display because of blending differs for the sides and center).

NOTES: 1) *The menu options vary depending on the Edge Blending parameters.* ***2)*** *You may need to re-adjust the black level hues following the overlap adjustments on each blended edge.* ***3)*** *When adjusting six or more projectors, you need to ensure that the hue and brightness of each target area is matched at closely as possible.*

3.12 Remote Control of the Projector

As an alternative to using a keypad, most projector functions can be controlled remotely, typically at a controller such as a PC, via 1) simple bi-directional ASCII messaging on an Ethernet or serial communication link or 2) a web interface or "ChristieNET" on an Ethernet network.

VIA ASCII MESSAGING — Connect a serial link between your controller and the RS232 or RS422 port (recommended), or open an Ethernet socket (i.e., Telnet) between your controller and the valid projector address. Valid ASCII codes and messages are documented in the *Christie Serial Communications* document available at the Christie website.

VIA WEB INTERFACE — Connect your PC to the projector's Ethernet port. In your web browser (*Internet Explorer*, for example), enter the IP address of the projector you wish to control. This will start a password-protected ChristieNET application—enter the factory default "**ccm7**" login and password to open the program. If the projector is powered up, you can access assorted menu options and slidebars.

Repeat for remaining networked projectors as desired. Keep in mind that multiple units can be controlled from one PC, but each unit will be in its own ChristieNET interface (web browser) at the PC. Likewise, you can make up to five separate web locations to a single projector.

The default login provides access to security settings, where you can define other users with the same or fewer rights. Use "unlimited" rights for most applications. For all logins, the *Service* menu is still protected with its own password.

NOTES: 1) *Any proxy server settings that interfere with this type of link should be disabled for using ChristieNET. Disable through Internet Explorer's < Tools> <Internet Options> <Connections> <LAN Settings>.* ***2)*** *Your PC must be Java-enabled to v1.4.2 or higher to run ChristieNET.* ***3)*** *Depending on your projector model, certain controls provided through ChristieNET are non-functional.*

3.13 Error Conditions

Occasionally the projector will encounter an error condition that can interrupt normal operation. Such a condition can be caused by a simple invalid keypad entry, an input signal error (most common) or a system error. The manner in which users are to be notified of error conditions is set in the *Menu Preferences* menu:

- To see error messages displayed on-screen, select the "**Screen**" option
- To be notified via a serial communication only, select the "**RS232**" option.
- To receive both types of notifications, select "**All**".
- To disable error messages (except for "invalid user key entry", which can't be hidden), select "**Off**".

Note that status/error messages also appear in the LCD Status Display window near the keypad at the rear of the projector. They are accompanied by their corresponding 2-digit error code next to the keypad, evident at a greater distance. Normal operation is indicated by the "00"status code.

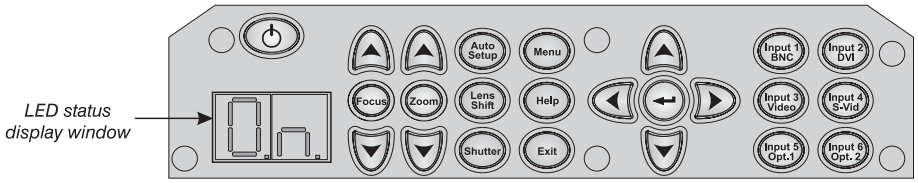

User Errors

Invalid User Entry

A keypad entry not recognized by the projector triggers a short on-screen error message identifying the problem. For example, if you specify a channel number that is not available, the message "*Invalid Channel* will appear. Or if you try to enter the wrong password, you'll see "*Invalid Password*". Press ↵ or Exit to clear the message and try again.

NOTE: *On-screen display of "Invalid User Entry" messages cannot be disabled, even if* ***Display Error Messages*** *has been set to "Off".*

Input Signal Errors

An input signal error message occurs if you are in presentation level (i.e., there are no menus present) and have selected an input on which the projector detects a problem. While menus remain operational and any key press will temporarily remove any displayed error message, you must resolve the signal problem in order to permanently eliminate the message.

No Signal

The message *"No signal"* occurs when there is no source signal detected at the selected input—both HSYNC and VSYNC are inactive and the screen background is black. Connect or correct the signal, or try another input.

Bad Sync

The message *"Bad Sync"* occurs when HSYNC or VSYNC are active but the signal cannot be displayed. Such a condition occurs when only one of the two sync signals is present, or when either sync signal is unstable or of the wrong frequency. Correct the signal or select another input.

Other Signal Error Messages

In addition to the common *"Bad Sync"* and "*No Signal*" errors, you may encounter a signal error message indicating that HSYNC and/or VSYNC are either too fast or too slow. When such a message appears, check the frequencies shown in the *Status* menu. If they are correct, then the projector does not recognize the signal. On some PCs you may be able to change the settings to generate a compatible signal. If the frequencies shown in the *Status* menu are incorrect, check the cabling to see where the problem might originate.

System Warnings / Errors

When the projector encounters a system malfunction, either a *System Warning* message or a *System Error* message may appear. Both types of messages are accompanied by a numerical error code on the "Status" LED, and a related text message appears in the LCD Status Display window. A system malfunction can be cleared with Exit Exit from presentation level, but may indicate the need for service by a qualified service technician.

NOTE: *System messages appear on-screen only if* ***Display Error Messages*** *has been set to "Screen" or "All".*

System Warnings

A system *warning* indicates that a system malfunction has been detected (see *Status LED Codes*, below). A system *warning* message replaces any input signal message and disappears when the input signal status changes. While the projector will remain operational, the message indicates the presence of a potentially serious problem that should be reported to the manufacturer. You can press Exit Exit to remove the message, but for best results you should reset the projector—power the projector down and up again with the ⏻ (power) key.

System Errors

A system *error* message indicates that a serious malfunction has been detected and must be reported to the manufacturer as soon as possible (see *Status LED Codes*, below). The projector will no longer operate and must be reset—power the projector down and up again with the ⏻ (power) key.

The Status LED Codes

If the status code display on the back of the projector shows one of the following values, you have encountered a likely system error requiring the attention of a qualified service technician (see *System Warnings* and *System Errors*, above). Acknowledge and clear the error with Exit Exit from presentation level, or try resetting the projector by powering it off and on again, cooling when necessary. Consult Table 3.1 and contact your dealer if the problem persists.

Table 3.4. System Error Codes

Code	Description
GENERAL	
12	Software error. Contact dealer/factory.
13	CRC error in flash ROM. Download new software.
14	Engineering-only programming is complete. Call Christie, replace TIPM.
15	Attempting to download s/w code without being in boot mode
16	Invalid interrupt. Power off/on. If persists, contact dealer/factory.
17	User has forced system to stay in boot mode
18	Attempting to program boot mode without jumper
LAMP / BALLAST	
20	The lamp is unexpectedly on (likely a ballast and/or wiring problem)
21	Lamp airflow is low; overheating imminent
23	Cannot read valid ballast ID
26	Lamp door is open, or lamp is not installed (interlock)
27	Lamp cannot ignite
28	Lamp has turned off unexpectedly
29	Lamp ballast is overheated
2D	Unknown or invalid Ballast ID, usually caused by faulty ballast cable or faulty ballast.
POWER & COOLING	
46	Red DMD heat sink has overheated
47	Green DMD heat sink has overheated
48	Blue DMD heat sink has overheated
49	Prism has overheated *(not applicable to Roadster S+12K)*
4C	Projector has shut down due to critical error
C0	Lamp cannot ignite due to blower failure
C6	TIPM is overheated
C7	TIPM is approaching the over-temperature threshold
53	Card cage fan failed (Fan 3) *NOTE: may be connected as fan 4 or 5*
54	LVPS fan failed fan failed (Fan 4) *NOTE: may be connected as fan 3 or 5*
55	Exhaust fan failed (Fan 5) *NOTE: may be connected as fan 3 or 4*
56	Prism fan failed (Fan 6)
57	Red DMD fan failed (Fan 7)
TIPM (10-bit Image Processor)	
60	Boot code CRC failed
61	Unable to program DigMux PLD
62	Unable to program Control PLD
63	Unable to program Bubks PLD
64	Unrecognized ROM type
65	Write to flash ROM failed
66	General TIPM failure
67	Downloaded code will not fit into ROMs
68	Communication failure with scalar on TIPM
Keypad and EEPROM	
70	Unable to access EEPROM on the built-in keypad
71	EEPROM memory on the built-in keypad has reinitialized
PANEL DRIVER or FORMATTERS	
80	Unrecognized Panel Driver
81	Unable to program device on Panel Driver
82	TI flash download failure
83	TI flash download failure
84	TI flash download failure
85	TI - I^2C write failure
86	One or more Formatters is not responding — probable Formatter s/w fault
87	Formatter reports consecutive RDRAM failures
88	Red modular Formatter communication failure
89	Green modular Formatter communication failure
8A	Blue modular Formatter communication failure
93	Modular Formatter architecture error
94	Modular Formatter / DMD mismatch
95	Modular Formatter sequence mismatch
MISCELLANEOUS	
A0	Unable to program the optional interface module
A1	Unable to power the optional interface module
A2	Unable to program the Dual Slot Backplane Module (DSBP)
A3	Unable to program the warping module option (*ChristieTWIST*)

If you encounter a system error, clear it with Exit Exit*. If necessary, try resetting the projector by powering it off and on again (cooling if necessary). Contact dealer/factory if error persists.*

The specific code number identifies the source of the error detected, and is particularly useful in cases wher8e the projector is too far away to read the accompanying text message in the LCD status display window. For example, the code “21” means the lamp could not be turned on. Error codes for this projector are listed in Table 3.4.

Section 4

Maintenance

4.1 Warnings and Guidelines

This projector is safety agency approved and is designed for safe and reliable operation. However, safe operation cannot be assured by design alone; installers, maintainers, and users must maintain a safe operating environment for the system. Please read through and understand the following warnings and guidelines promoting safe usage of the projector.

⚠ WARNING ⚠

Always remove the lens when shipping the projector.

⚠ WARNING ⚠

**NEVER look directly into the projector lens.
The high brightness of this projector
could cause permanent eye damage.**

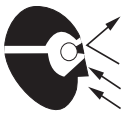

⚠ WARNING ⚠

**For protection from ultraviolet radiation,
keep all projector shielding intact during operation.**

! CAUTION

Installation should be performed by qualified personnel ONLY.

Labels and Markings

Observe and follow all warnings and instructions marked on the projector.

The exclamation point within the equilateral triangle alerts the user to important operating and maintenance (servicing) instructions in the literature accompanying the projector.

The lightning flash and arrowhead symbol within the equilateral triangle alerts the user to non-insulated “dangerous voltage” within the projector’s enclosure that may be of sufficient magnitude to constitute a risk of electric shock.

Projector Location

Operate the projector in an environment that meets the operating range specifications in ***Section 6, Specifications***. Do not operate the projector close to water, such as near a swimming pool.

Do not place the projector on an unstable cart, stand or table. If the projector is to be ceiling mounted, only use the Christie-approved ceiling mount fixture designed for your projector.

A projector and cart combination should be used with care. Sudden stops, excessive force, and uneven surfaces may cause the projector and cart combination to overturn.

Lamp and Filter Replacement

LAMP: Do not operate the Bubble lamp for more than the lamp's warranty limit; risk of the lamp shattering increases as a result of changes in the quartz glass that occur with use. Operation beyond the lamp's warranty limit also significantly reduces brightness output.

⚠ WARNING ⚠

Wait approximately 5 minutes after powering down the projector to allow internal cooling fans to stop and for the lamp to cool sufficiently before removing.

Never attempt to remove the lamp housing directly after use. The lamp is under great pressure when hot and may explode, causing personal injury and/or property damage. Allow cooling completely.

The Bubble lamp operates at a very high temperature and pressure. Failure to allow the lamp to sufficiently cool prior to handling could result in an explosion causing personal injury and/or property damage. After turning the projector off it is important that you wait at least five minutes before unplugging it. This provides enough time for the internal lamp cooling fans to cool the lamp and to automatically shut off. Cool completely before handling.

⚠ WARNING ⚠

Use only lamps supplied by Christie. Use lamps of the correct wattage for your projector model when replacing.

FILTER: Replace the front filter when you replace the lamp or sooner. If this filter is not replaced, airflow may become restricted and cause the projector to overheat.

See ***4.4, Replacing the Lamp and Filter*** for the complete replacement procedure.

⚠ WARNING ⚠

Use only filters supplied by Christie.

Power Cord and Attachments

⚠ The North American rated line cord is provided with each projector. Ensure that you are using a line cord that meets the appropriate rating standards (CCC for use in China, PSE for use in Japan).

Only use attachments or accessories recommended by Christie, such as the specific power cord supplied. Use of other attachments or accessories with this projector may result in the risk of fire, shock or personal injury.

⚠ WARNING ⚠

Use only the AC power cord supplied. Do not attempt operation if the AC supply and cord are not within the specified voltage and power range. See Section 6.

- Do not allow anything to rest on the power cord. Locate the projector where persons walking on it or objects rolling over it cannot abuse the cord.

- Operate the projector at the specified voltage only. Do not overload power outlets and extension cords as this can result in fire or shock hazards.
- The projector is equipped with a three-wire plug having a third (grounding) pin. This is a safety feature. If you are unable to insert the plug into the outlet, contact an electrician to have the outlet replaced. Do not defeat the safety purpose of the grounding-type plug.

Ventilation ' Before unplugging the power cord, make sure the internal lamp cooling fans have shut off. The fans automatically shut off when the projector has adequately cooled down.

Slots and openings in the projector provide ventilation. To ensure reliable operation of the projector and to prevent overheating, these openings must never be blocked or covered. The projector should never be placed near or over a radiator or heat register. The projector should not be placed in an enclosure unless proper ventilation is provided. For best results, ensure that the projector bottom is above any “lip” that may be present on a cart—extend projector feet as necessary.

Do not push objects of any kind into the projector through the ventilation openings. They may touch dangerous voltages or short-out components resulting in a fire or shock hazard. Do not spill liquids of any kind into the projector. Should an accidental spill occur, immediately unplug the projector and have it serviced by a qualified service technician.

Servicing ' If any of the following conditions exist, immediately unplug the projector from the power outlet and refer service to qualified service personnel.

- The power cord has been damaged.
- The internal cooling fans do not come on within 2 minutes after the projector is first turned on.
- Liquid has been spilled into the projector.
- The projector has been exposed to excessive moisture.
- The projector does not operate normally.
- The projector has been dropped or the case has been damaged.
- Projector performance has deteriorated.

⚠ WARNING ⚠

Do not attempt to service the projector yourself. All servicing must be performed by CHRISTIE accredited service technicians.

Use replacement parts that are manufacturer-approved only. Use of any other part other than the ones specified by the manufacturer can result in fire, electric shock or risk of personal injury and irreparable equipment damage.

4.2 Cleaning

⚠ WARNING ⚠

Always power down and unplug the projector before cleaning or servicing.

Table 4.1. Maintenance Guide

Part Description	Frequency	Action
Lens	*As required*	**CLEAN:** Clean if absolutely necessary. A small amount of dust on the lens has very little affect on picture quality. **To clean:** Apply a solvent such as acetone, alcohol or vinegar sparingly to clean, lint-free lens tissue. Wipe across the surface of the lens. Do not scrub or rub tissue in circular motion, this will scratch the lens. Do not reuse tissue. Do not use cleaning tools treated with Ether. If particles still appear on the lens, try using compressed air to remove.
Lamp	*As required*	**CLEAN:** Clean if absolutely necessary. Never touch the glass surface of the lamp. Fingerprints left on the glass will seriously degrade lamp performance or cause "hotspots" which can lead to an accumulation of intense heat in the touched area and cause the lamp to shatter. **To clean:** Wait until lamp is cool. Moisten a clean, lint-free cotton cloth with isopropyl alcohol and gently rub the surface of the glass in a circular motion until clean.
	1000 hrs or sooner if required	**REPLACE:** Refer to ***4.4 Lamp and Filter Replacement*** procedure later in this section.
Filters	*Whenever a lamp is replaced or sooner if required*	**REPLACE:** Do not reuse old filters. Use the filter provided in the Christie Lamp and Filter Kit.
Covers (External)	*As required*	**CLEAN:** Clean dust from external covers using a clean, lint free cotton cloth as required. ***NOTE:*** *Before cleaning the modules, it is recommended that you install the lens cap. This will keep dust particles from settling on the glass surface of the lens.*

⚠ WARNING ⚠

Proper face shield and protective gloves are required if the lamp module is removed from the projector.

4.3 Replacing Keypad Batteries

The IR Remote Keypad uses two AA size, 1.5V batteries (preferably alkaline). To install new batteries:

1) Open the battery compartment at the backside of the keypad by placing your thumb in the oval depression and sliding the cover out about ½ inch. See Figure 4.1. Remove the old batteries and properly discard. Wait a minute or two.

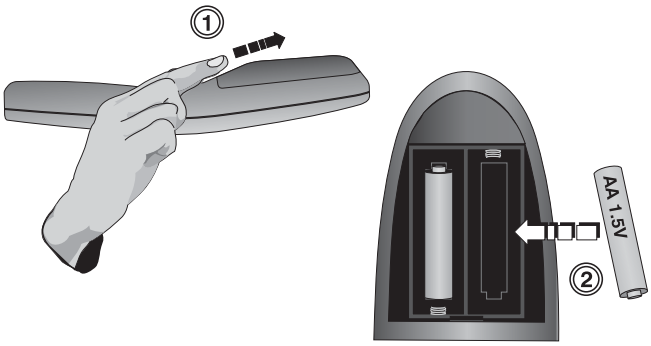

Figure 4.1. Replacing Batteries

2) Place the new batteries in the compartment, orienting the positive/negative of each battery according to the labels in the compartment. When the batteries are in place, replace the cover by placing the cover ½ inch from its closed position and slide it into place. Do not force the cover.

NOTE: *Always wait a minute or two when replacing batteries so that the internal electronics discharge and can recognize the change.*

4.4 Replacing the Lamp and Filter

For this procedure you will need the appropriate ***Roadster S+12K, Roadster S+16K/Mirage S+14K or Roadster S+20K Lamp and Filter Replacement Kit*** manufactured by Christie Digital Systems. See Table 4.2 below.

Table 4.2. Lamp and Filter Kits

Projector Model	Lamp Type (Watts)	Lamp/Filter Kit Required
Roadster S+12K (38-DSP210-02) (38-DSP210-52)	2.0kW	03-900519-01P 03-900519-51P
Roadster S+16K (38-DSP214-03) (38-DSP214-53)	2.4kW	03-900518-01P 03-900518-51P
Mirage S+14K (38-DSP214-04) (38-DSP214-54)		03-900518-01P 03-900518-51P
Roadster S+20K (104-001001) (104-001101)	3.0kW	003-000306 003-000306-02

A bubble lamp permanently mounted inside its own protective assembly provides the high brightness of your projector. Using this module beyond its warranted life is not recommended—changes in the quartz of the bulb can lead to reliability problems, poor performance or sudden lamp expiry. The filter should always be changed when the lamp is replaced, or sooner in dusty environments.

The lamp module is calibrated for maximum performance and brightness in this projector. Do not attempt to re-align or adjust the lamp module.

How old is the lamp?

The number of hours logged on the current lamp appears both in the *Lamp* menu and the *Status* menu. In the *Status* menu, do not confuse "Lamp Hours" with "Lamp Counter" which indicates the number of hours logged during the current rental period only and is normally used for rental projectors only.

NOTE: *As the lamp nears its limit (as set in* ***Lamp Limit****), a message can appear on screen to warn that the lamp needs to be replaced. The LED's next to the built-in keypad will flash "LP" when lamp time has expired. To make sure that this warning appears, enter a checkmark in the* ***Lamp Message*** *checkbox located in the* ***Lamp*** *submenu.*

Lamp Replacement Procedure

TOOLS: A #2 Phillips screwdriver is required. All access panels' screws are ¼-turn to lock/unlock.

Warnings

⚠ Lamp replacement must be performed by a qualified service technician.

⚠ Cool the lamp completely and handle by the housing only.

⚠ Install the correct wattage lamp supplied by Christie (see above) and read the Lamp Replacement procedure in its entirety before proceeding.

⚠ Do not touch the glass surface of the lamp. Fingerprints left on the surface can lead to an intense accumulation of heat called a "hotspot", which could potentially result in the lamp shattering. It is recommended you wear clean, lint-free gloves and a face shield when working with the lamp.

1. TURN THE LAMP OFF

Press ⏻ (power) to turn the lamp off. Allow the cooling fans to stop automatically (within approximately 5 minutes) before proceeding with Step 2. This wait period is also required to allow the lamp to sufficiently cool before handling.

2. UNPLUG THE PROJECTOR

When the cooling fans have stopped, turn the projector's main switch off, and unplug.

⚠ WARNING ⚠

Always power down and unplug the projector prior to servicing. Allow the lamps to cool before handling

3. OPEN THE LAMP DOOR

⚠ WARNING ⚠

Protective gear required. Wear a face shield.

Using a #2 Phillips screwdriver, loosen the ¼-turn lock screws (2) securing the lamp door, which is located at the rear of the projector below the input panel. See Figure 4.2.

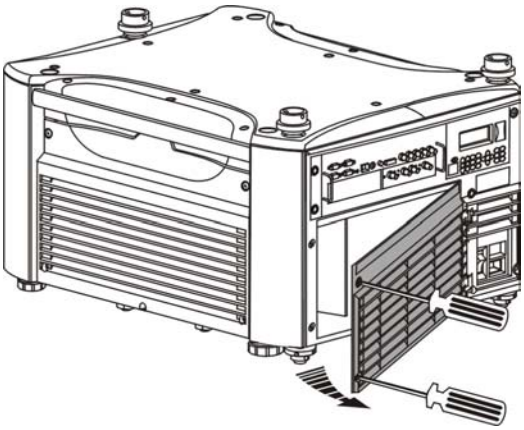

Figure 4.2. Open Lamp Door

4. REMOVE LAMP RETAINING BAR

Remove the two (2) screws that secure the retaining bar along the bottom edge of the lamp module using a #2 Phillips screwdriver. See Figure 4.3. Swing the bar aside—it is hinged on the left.

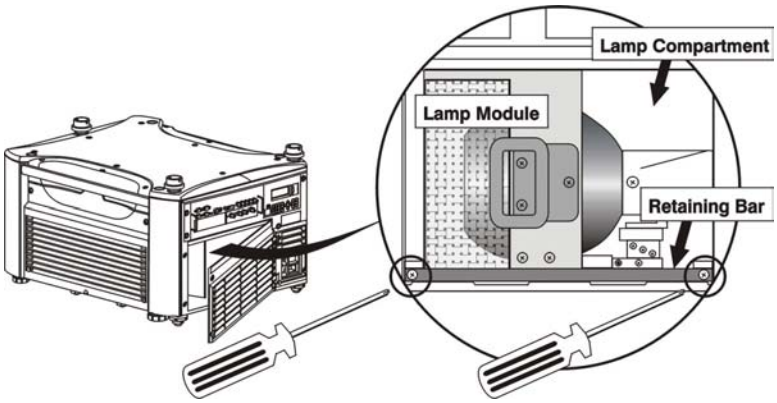

Figure 4.3. Remove Retaining Bar

5. REMOVE THE LAMP MODULE

Firmly grasp the handle and pull the lamp module straight out of the projector. See Figure 4.4. Discard the lamp using safe disposal/recycling practices.

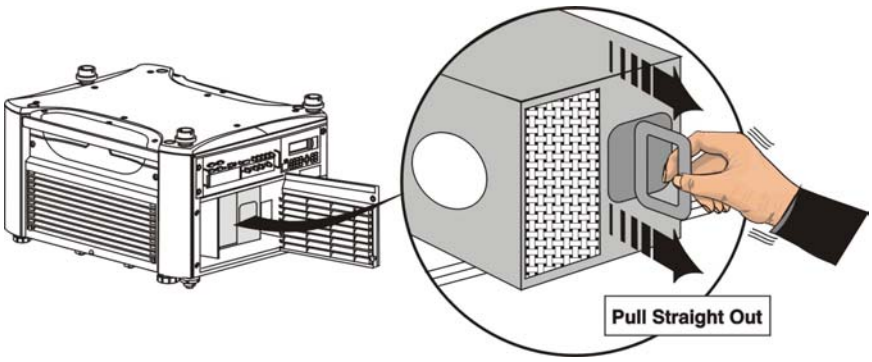

Figure 4.4. Remove Lamp Module

6. INSERT THE NEW LAMP MODULE

Align the base plate of the new lamp module under both side alignment guides (see right). Slide the module fully into the projector in the same orientation you removed the old lamp module. Push with normal force until the resistance increases, then firmly push module another ½ inch.

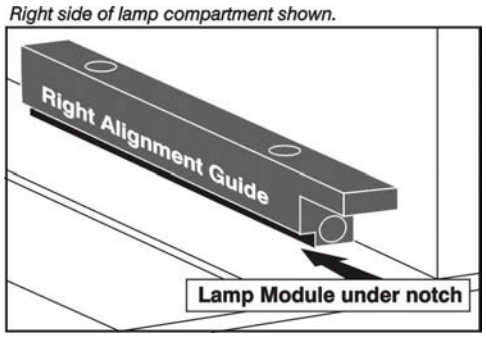

NOTE: *The lamp module must make* ***full contact*** *with the lamp connectors. Increased resistance when sliding the module in indicates initial contact with these connectors—push firmly at this point.*

⚠ WARNING ⚠

Improper installation could cause a serious meltdown inside the projector.

7. RE-INSTALL LAMP RETAINING BAR

Position the retaining bar along the bottom edge of the lamp module, with its ends under the alignment guides. If the bar does not fit, push the lamp module further in. See Figure 4.5.

⚠ IMPORTANT ⚠

The tightening order of the screws is critical for proper lamp *contact* and *alignment*.

- ❑ Secure screw **B** until just engaged.
- ❑ Secure screw **A** until just engaged.
- ❑ Go back and forth between **A** and **B** to lock the bar in place with even pressure and correctly position the lamp module.

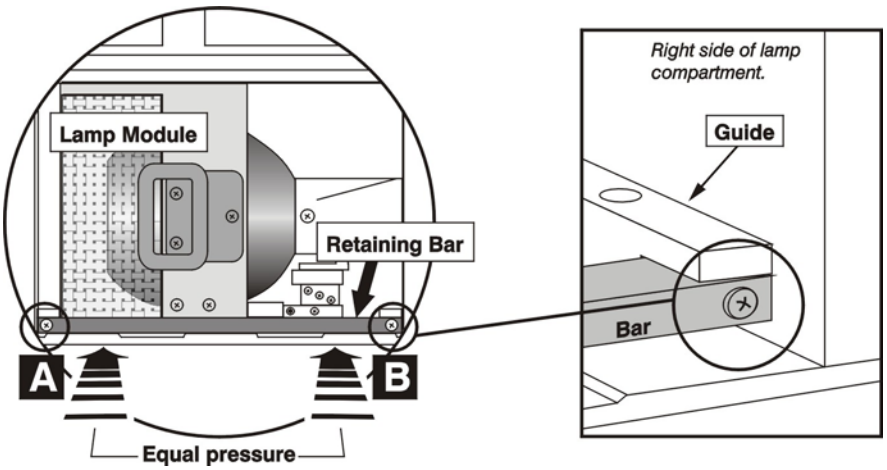

Figure 4.5. Install Retaining Bar

8. CLOSE LAMP DOOR

Close the lamp door and lock its two (2) ¼-turn lock screws.

⚠ IMPORTANT ⚠

The lamp module is calibrated for maximum performance and brightness in this projector. Do not attempt to re-align or adjust the lamp module.

9. RECORD THE SERIAL NUMBER OF THE NEW LAMP

- Plug in the projector and power it up.
- In the Lamp menu, select "Change Lamp".
- In the Lamp S/N text box, enter the serial number.
- Press to record the number and to reset the lamp timer. The timer will now begin to log time for the new lamp.

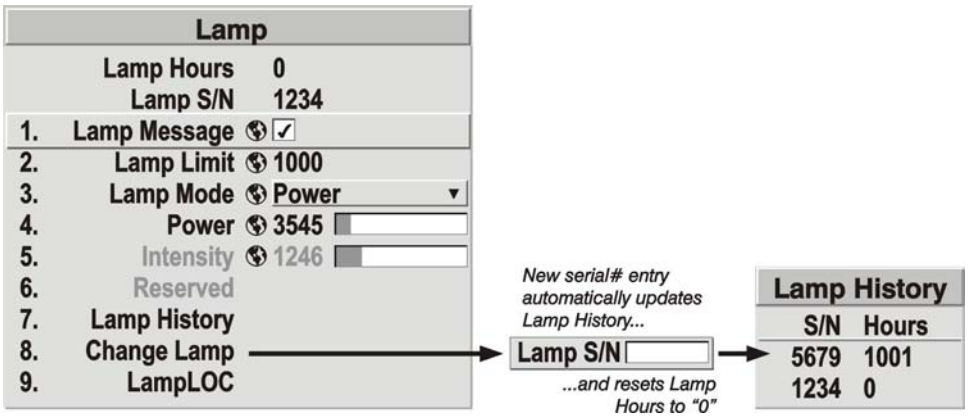

⚠ IMPORTANT ⚠

If you neglect to enter a serial number, the lamp timer will not reset to "0" and will therefore be inaccurate. The lamp life limit may then expire prematurely.

Filter Replacement Procedure

' The filter located at the front side of the projector should be replaced whenever the lamp is replaced. If you are working in an extremely dusty environment you may want to replace the filter sooner. Use the filter provided in the Christie approved Lamp and Filter Kit for your specific projector model (see Table 4.2).

1. TURN OFF THE PROJECTOR, COOL and UNPLUG

Before removing or installing a filter, turn off the projector and allow it to cool for 5 minutes before unplugging.

2. REMOVE FILTER DOOR

Loosen the ¼-turn screw at the top of the filter grille/door. Lift the door away from the projector. See Figure 4.6.

NOTE: *In the Roadster S⁺20K, also remove the triangular metal filter brace.*

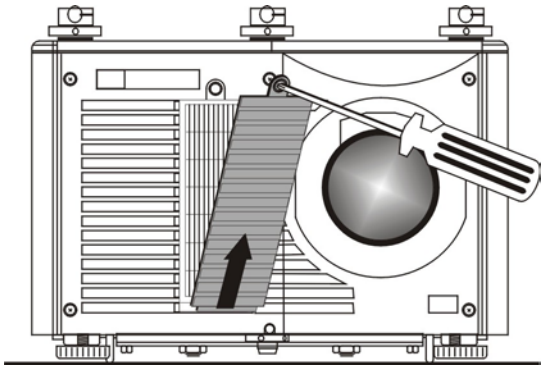

Figure 4.6. Remove Filter Door

3. REPLACE FILTER

Remove the old filter and insert the new one. Follow the airflow arrows for correct orientation. See Figure 4.7. In the Roadster S+20K, which has a rhomboid-shaped filter, insert the sharply angled corner first – place fully back on the left. Make sure to install the triangular metal filter brace after the filter has been positioned. See Figure 4.8.

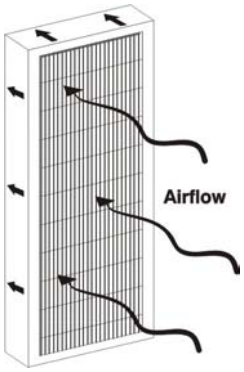

Figure 4.7. Airflow

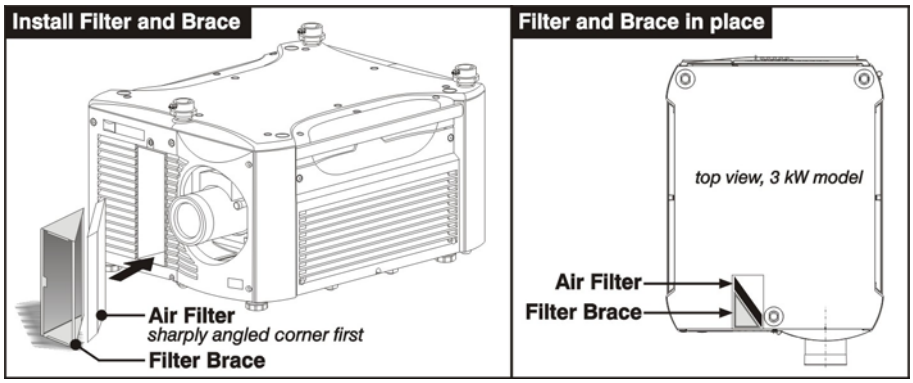

Figure 4.2. Installing the Angled Air Filter (Roadster S⁺20K Only).

4. RE-INSTALL THE FILTER GRILLE/DOOR

Secure with the single top screw.

4.5 Replacing the Projection Lens

A variety of lenses can accommodate different throw distances and specific types of installations. See page 6-1 for details. To change a lens, follow the steps below. No tools are required for “compact” lenses shown.

STEP 1 ' *Turn off the projector, cool and unplug*

NOTE: *If necessary, a lens can be swapped out while the projector is running, but this can result in dust being drawn into the projector. Avoid if possible.*

Before removing or installing any lens, turn off the projector and allow the fans to cool the lamp before unplugging the projector. Ensure that the lens cap is on.

WARNING
Unplug the projector.

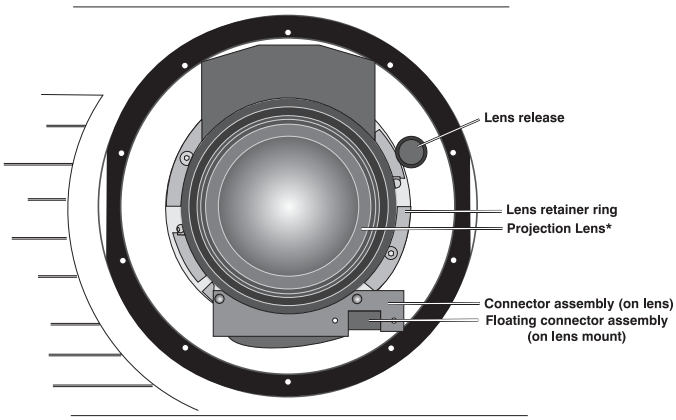

STEP 2 ' *Install the lens cap and press the lens release button*

See Figure 4.9.

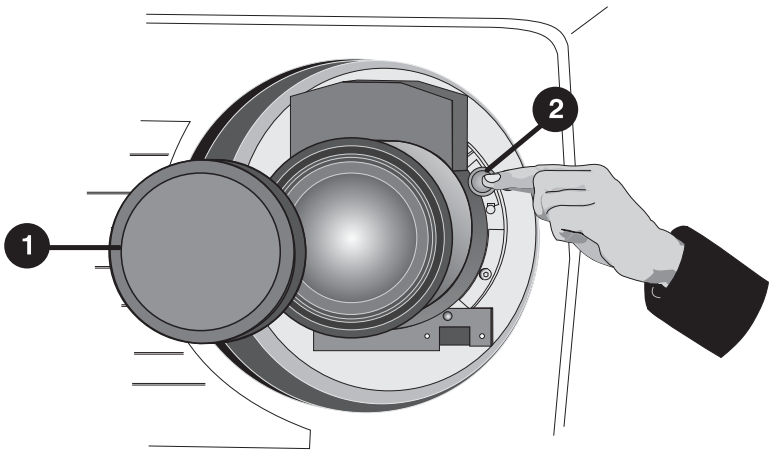

Figure 4.9. Depressing Lens Release

STEP 3 ' Rotate the lens

Rotate the lens counter-clockwise until the tabs are free from the lens retainer ring. See Figure 4.A.

NOTE: *The connector slide assembly allows the connector to move as the lens is rotated.*

STEP 4 ' Pull lens out

Lens connectors will disconnect when you pull the lens straight out from the projector. See Figure 4.B.

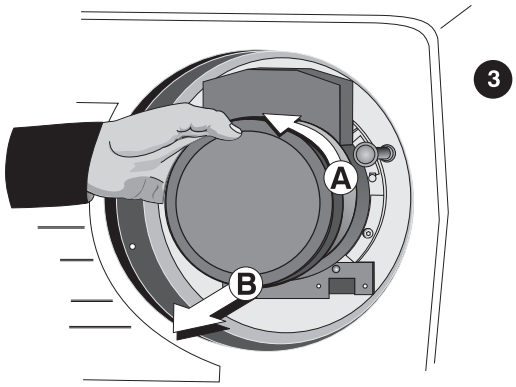

NOTE: Connector assembly will move as you turn the lens.

Figure 4.10. Rotating the Lens

STEP 5 ' Insert new lens.

NOTE: *Remove small rear cap! Keep front cap on.*

- ***Electrical connector:*** Line up male connector on the lens with the female connector on the connector slide assembly.
- ***Insert lens:*** Align the tabs on the lens plate lock with the slots in the lens retainer ring. Push the lens in approximately ½ inch.
- ***Rotate the lens:*** Rotate the lens clockwise until the tabs are tightly secured and the lens release button CLICK.
- ***Secure lock-down screws (optional):*** For added stability, secure the adjustment screws provided on the lens retaining ring (see Figure 4.). If you have installed a large zoom lens, one or more of the screws may be inaccessible—simply tighten those that are accessible.

  NOTE: *Recommended for heaviest lenses such as 0.73:1 and 1.2:1.*

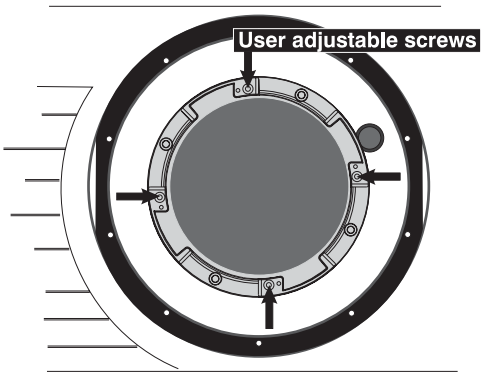

Figure 4.11. Adjustable Screws on Retaining Ring

STEP 5 ' Power Up

Remove the lens cap and power up the projector.

STEP 6 ' Reposition the Projector for New Lens

Reposition the projector closer or further from the screen as necessary for the screen and the new lens type – refer to lens descriptions in ***Section 2***, ***Section 6*** and ***Appendix D, Throw Distance***. In a permanent installation, always use the appropriate throw distance formula to calculate the best position for the projector (Figure 4.12).

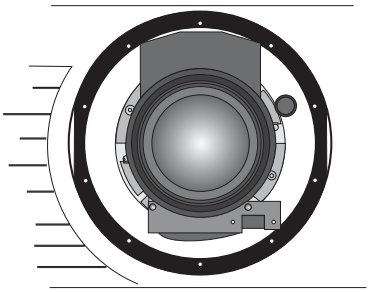

Figure 4.12. View With Zoom Lens Installed

Section 5

Troubleshooting

If the projector does not appear to be operating properly, note the symptoms present and use the following guide to assist you. If you cannot resolve the problems yourself, contact your dealer for assistance.

NOTE: *A* ***qualified service technician*** *is required when opening the projector to diagnose any "probable cause".*

5.1 Displays

Symptom ' ***Blank screen, no display of image…***

CAUSE/REMEDY:

1. Confirm all power connections are still OK.
2. Make sure the lens cap has been removed.
3. Make sure the shutter is OPEN.
4. Make sure there is not a full black test pattern selected for display—press Menu ▲ to access test patterns, then cycle patterns with ◀ ▶ keys.
5. Is the input selected? Check connections.

Symptom ' ***Blacklevels seem too high***

Reduce Brightness setting.

Symptom ' ***Image appears "squeezed" or vertically stretched into center of screen***

CAUSE / REMEDY:

1. Check your Resizing selection.
2. The anamorphic lens (optional) may be needed for this source.

Symptom ' ***The projector is on but there's no display...***

CAUSE / REMEDY:

1. Was a lens cover accidentally left on? Remove lens cover.
2. Make sure the shutter is OPEN.
3. Is the lamp ignited? Check for interlock problems such as an open lamp door.
4. Is the correct input selected?
5. Is the source connected properly? Check the cable connections and make sure the correct source is selected.
6. Is AC power connected?
7. Can you access test patterns? If so, check your source connections again.

Symptom ' ***The display is jittery or unstable…***

CAUSE / REMEDY:

1. If the display is jittery or blinking erratically, ensure that the source is properly connected and of adequate quality for detection. With a poor quality or improperly connected source, the projector will repeatedly attempt to display an image, however briefly.
2. The horizontal or vertical scan frequency of the input signal may be out of range for the projector. Refer to *Section 6, Specifications* for scan frequency ranges.
3. The sync signal may be inadequate. Correct the source problem.

Symptom ' ***The display is faint…***

CAUSE / REMEDY:

1. Brightness and/or contrast may be set very low.
2. The source may be double terminated. Ensure the source is terminated only once.
3. The source (if non-video) may need a different sync tip clamp location.

Symptom ' ***The upper portion of the display is waving, tearing or jittering…***

CAUSE / REMEDY:

1. This can sometimes occur with video or VCR sources. Check your source.

Symptom ' ***Portions of the display are cut off or wrap to the opposite edge…***

CAUSE / REMEDY:

1. Resizing and/or blanking may need adjustment.

Symptom ' ***The display appears compressed (vertically stretched)…***

CAUSE / REMEDY:

1. The frequency of the pixel sampling clock is incorrect for the current source.
2. Resizing, vertical stretch and positioning options may be improperly adjusted for the incoming source signal.
3. You may need an anamorphic lens for sources that have been supplied in a re-sized and vertically stretched format.

Symptom ' ***Data is cropped from edges***

CAUSE / REMEDY:

1. Check settings for Blanking.
2. If incoming data is still missing from the image, reduce the image size to within the display area available in the projector.

Symptom ' ***Display quality appears to drift from good to bad, bad to good…***

CAUSE / REMEDY:

1. The source input signal may be of low quality.
2. The H or V frequency of the input may have changed at the source end.

Symptom ' ***The display has suddenly frozen…***

CAUSE / REMEDY:

1. If the screen blacks out inexplicably, it is possible that excessive voltage noise on the AC or ground input has interrupted the projector's ability to lock on to a signal. Power down the projector and disconnect from AC. Then plug in again and power up as usual.

Symptom ' ***Colors in the display are inaccurate…***

CAUSE / REMEDY:

1. The color, tint, color space, color temperature and/or other settings may require adjustment.
2. Make sure you are using the proper channel for this source.

Symptom ' ***Values in Color Saturation slidebars vary over time***

CAUSE / REMEDY:

1. Once defined, *Color Saturation* slidebar values fluctuate over time and will likely be different upon subsequent visits to this menu. This is normal and should be ignored, as these changes do not redefine the x/y coordinates or color gamut.

Symptom ' ***The display is not rectangular…***

CAUSE / REMEDY:

1. Check leveling of the projector. Make sure that the lens surface and screen are as parallel to each other as possible.
2. Is the vertical offset correct? Adjust as necessary using the vertical offset knob.

Symptom ' ***The display is "noisy"…***

CAUSE / REMEDY:

1. Display adjustment at your input source may be required. Adjust pixel tracking, phase and filter. Noise is particularly common on YPbPr signals from a DVD player. (If using a PC source, adjust using a high-frequency test pattern with one pixel on/off throughout.)
2. The video input may not be terminated. Make sure the video input is terminated (75Ω). If it is the last connection in a loop-through chain, the video input should be terminated at the *last* source input only.
3. The input signal and/or signal cables carrying the input signal may be of poor quality.
4. If the distance between the input source device and the projector is greater than 25 feet, signal amplification/conditioning may be required.
5. If the source is a VCR or off-air broadcast, detail may be set too high.

5.2 Lamp

Lamp Does Not Ignite '

1. If the lamp won't ignite, there may be an interlock failure such as an open lamp door, or failed lamp fan. An error code will display on the status LED display located on the built in keypad.
2. If a temperature is too high ("DMD over critical temp limit", e.g.), the lamp will not ignite until the temperature is low enough. Cool the projector and try again.
3. For suspected communication failures, power-down the projector and try again.
4. If the lamp does not ignite after a second and third try, replace the lamp.

Lamp Suddenly Turns Off '

1. Try increasing the lamp power.
2. The DMDs may be overheated.
3. Replace the lamp.

Flicker, Shadows Or Dimness '

1. Increase lamp power, if possible.

LiteLOC™ Does Not Seem To Work '

1. Make sure "Intensity" is selected in the *Lamp* menu. Other lamp modes disable LiteLOC™ .
2. If the lamp power has increased to its maximum in order to maintain a LiteLOC™ setting, LiteLOC™ is automatically terminated. If the values shown in the *Lamp* menu indicate that the lamp power has reached this "over-drive" state, either reduce your LiteLOC™ setting or install a new lamp.

5.3 Ethernet

1. Make sure the Ethernet settings are valid for your site—all network devices should have the *same* subnet mask and *unique* IP addresses.
2. Make sure the projector is connected to a network before you attempt to change its IP address, and always cycle power (off-on) to implement the new IP address.
3. Make sure to save any address change, and re-boot to implement.
4. If you still have trouble establishing communications with a projector added to an existing Ethernet network, the projector's IP address is likely in conflict with another address already in use. Contact your network administrator.

Section 6

Specifications

6.1 Specifications

Roadster S+ Series
Mirage S+14K'

NOTE: 1) Due to continuing research, specifications are subject to change without notice. 2) 3D available in Mirage S+ series only.

Display

Panel Resolution and Refresh Rate

Pixel format (H x V) on 3 DMDs	1400 x 1050 (SXGA+)
Refresh rate	
• *Roadster S+*	23.97 – 92 Hz
• *Mirage S+ 14K*	92 – 115 Hz

Brightness ***ANSI 9 point measurement, with fully open optical aperture***

• *Roadster S+ 12K*	12,000 ANSI lumens
• *Roadster S+ 16K / Mirage S+ 14K*	16,000 ANSI lumens
• *Roadster S+ 20K*	20,000 ANSI lumens

Contrast Ratio

450-600 ANSI, 1500-1800 full field in *Roadster S+12/16K and Mirage S+14K*
450 ANSI, 1500 full field in *Roadster S+20K*

Colors and Gray Scale

Default Optical Color temperature (at grays)	5150K – 6750K	
Range of adjustment	3200K – 9300K	
Displayable colors	1.1 billion min.	
Gray scale resolution	10 bits (non-linear) min.	
Color Primaries (nominal)	X	Y
Red	0.660 ±0.025	0.330 ±0.025
Green	0.310 ±0.040	0.670 ±0.040
Blue	0.145 ±0.020	0.065 ±0.025

Lenses

Screen Widths

Lenses	Screen width ↔		Screen width Diagonal	
	ft	M	ft	m
0.73:1 Fixed Lens	5-14	1.5-4.38	6-18	1.88-5.48
1.2:1 Fixed Lens (short)	N/A	N/A	N/A	N/A
1.2:1 Fixed Lens (long)	2.30-23	0.7-7	3-32	1-10
1.45 – 1.8:1 Zoom	4-36	1.3-11	5-45	1.63-13.75
1.8 – 2.5: Zoom	4-36	1.16-11	5-45	1.45-13.75
2.5 – 4.5:1 Zoom	4 -36	1.35-11	6-45	1.69-13.75
4.5 – 7.3:1 Zoom	5-36	1.6-11	7-45	2.00-13.75

Lens Offsets

Lenses	Offsets (Movement)		Max. Amount of Display Above or Below Lens Center		Max. Amount of Display Left or Right of Lens Center	
	↑ or ↓	← or →				
0.73:1 Fixed	N/A	N/A	N/A	N/A	N/A	N/A
1.2:1 Fixed (short)	N/A	N/A	N/A	N/A	N/A	N/A
1.2:1 Fixed (long)	100%	50%	1050 pixels ↑ or ↓	100%	1050 pixels ← or →	75%
1.45 – 1.8:1 Zoom	100%	50%	1050 pixels ↑ or ↓	100%	1050 pixels ← or →	75%
1.8 – 2.5: Zoom	100%	50%	1050 pixels ↑ or ↓	100%	1050 pixels ← or →	75%
2.5 – 4.5:1 Zoom	100%	50%	1050 pixels ↑ or ↓	100%	1050 pixels ← or →	75%
4.5 – 7.3:1 Zoom	100%	50%	1050 pixels ↑ or ↓	100%	1050 pixels ← or →	75%

NOTE: *Maximum offsets are reduced when simultaneously offsetting horizontally and vertically. All measurements are performed from the optical center ±7%.*

Inputs

Number of inputs	
Roadster Series	5 standard inputs including a Dual SD/HD-SDI 1 input module slot
Mirage S+ 14K	4 standard inputs 2 input module slots

Analog: RGB / YPbPr (5 BNCs at INPUT 1)

Signal types / color spaces	○ RGB ○ YPbPr ○ Component video (CVBS), S-video (Y/C)
Horizontal frequency range	15 – 120 kHz
Vertical frequency range ✽	23.97 – 150 Hz
Scan format	Interlaced or progressive
Pixel clock rate	220 MHz max.
Active pixels per scan line (H)	640 – 2048
Active lines per field/ frame (V)	200 – 1536
A/D conversion resolution	10-bit
Input levels	
R,B,G,Y — with sync	$1.0V_{p-p}$ ±2 dB ($0.79V_{p-p}$ – $1.26V_{p-p}$)
R,G,B — without sync	$0.7V_{p-p}$ ±2 dB ($0.56V_{p-p}$ – $0.88V_{p-p}$)
Pb, Pr	$0.7V_{p-p}$ ±2 dB ($0.56V_{p-p}$ – $0.88V_{p-p}$)
DC offset	± 5V
Nominal impedance	75 ohms
Max. return loss (VSWR)	1.2:1 dB @ 200 MHz

✽ *Specifies **frame** rate for non-interlaced sources and **field** rate for interlaced sources. Input frequencies higher than the maximum panel refresh rate are displayed at a lower rate.*

Analog: Video (INPUTS 3 and 4)

Signal formats	Composite-video (CVBS), S-Video (Y/C)
Connectors	
• Composite Video *(INPUT 3)*	BNC
• S-Video *(INPUT 4)*	4-pin miniature DIN
Video standards	NTSC, NTSC 4.43, PAL, PAL-M, PAL-N, PAL-60 & SECAM
A/D conversion resolution	8-bit
Input levels	
Composite	1.0 V_{p-p} ± 3dB *(including sync tip)*
S-Video, Luma (Y)	1.0 V_{p-p} ± 3dB *(including sync tip)*
S-Video, Chroma ©	630 mV_{p-p} nominal (burst)
DC offset	± 2V
Nominal impedance	75 ohms
Maximum return loss (VSWR)	1.2:1 dB @ 6 MHz

Analog: Sync (INTERLACED OR PROGRESSIVE SCAN FORMAT)

Input levels *(for composite or separate H & V)*	$0.5V_{p-p}$ – $4.0V_{p-p}$
Impedance *(for composite or separate H & V)*	75 ohms
Sync type *(for composite or separate H & V)*	• Separate H and V • Bi-level or tri-level sync-on-green • Bi-level or tri-level composite • Serrations and/or Equalization pulses • MacroVision™ for stnd. & prog. video
Polarity *(for composite or separate H & V)*	Positive or negative

DVI-I (INPUT 2)

Interface standard	DDWG DVI 1.0
Signal types / color spaces	• RGB (digital or analog) • YPbPr (analog) • YCbCr✽ (digital)
Pixel clock rate	25 – 165 MHz
Analog sync input impedance	1 kohms
Maximum cable length	5 meters (16 ft.)
Supports EDID and HDCP	

*For all other DVI specifications, **see Analog: RGB** / **YPbPr** on previous page. ✽ not supported in v1.1 s/w*

Dual SD/HD-SDI (INPUT STANDARD WITH ROADSTER SERIES)

Number of inputs	2, each with active loop-through
Connector type	BNCs, 75 ohms
Supported interface standards	SMPTE 259M *(13.5 MHz clock modes only)* SMPTE 292M
Signal types / color spaces	Serial digital YCbCr *(4:2:2 only)*
Pixel clock rates supported	13.5 MHz, 74.25 MHz, 74.25/1.001 MHz

Control ' Remote Keypad

Keypad Type	IR with cable for converting to wired
Connector type*	3.5 mm phono jack (2)
Input levels	• High = 2.2 V – 5.6 V (or open) • Low = -0.6V – 0.9V @ 1mA
Voltage output	+5VDC ±5%
Current output	100 mA nominal, 250 mA max.

* *The Roadster "brick" remote includes a 3.5mm phono jack and a 3-pin connector.*

IR Remote Sensors

Number of IR sensors on projector.	2 (front and rear)
Wavelength of peak sensitivity	950 nm @ 38kHz, 870 nm @ 455 kHz
Modulation (carrier) frequency	38 kHz and 455 kHz
Encoding method	Bi-phase
IR reception range	100 ft.

Ethernet

Number of ports	1
Standard	100Base-TX
Connector type	Female RJ-45
Maximum throughput	115.2 kbps

RS232 Serial Input

Number of ports	2
Connectors	1 female 9-pin Dsub (IN) 1 male 9-pin Dsub (OUT)
Maximum bit rate	115.2 kbps
Flow control	Xon/Xoff

RS422 Serial Input

Number of connectors	1
Connector type	Female 9-pin Dsub
Maximum bit rate	115.2 kbps

GPIO Input

Number of I/O lines	7 (each individually assignable as input or output)
Connector type	9-pin male D-sub
Type of connection	Dry contact
Output sink current *(logic low)*	100 mA @ 1V
Power output	+12VDC @ 200 mA max.

Power

General

Voltage range, nominal	200 – 240 VAC ±10%
Line frequency, nominal	50 – 60 Hz
Inrush current	60 A max.
Current rating (@ 200VAC)	
Roadster S+12K	12 A
Roadster S+16K	16 A
Mirage S+14K	16 A
Roadster S+ 20K	24 A
Max. Power consumption (@ 200VAC)	
Roadster S+12K	2400 W
Roadster S+16K	3200 W
Mirage S+14K	3200 W
Roadster S+ 20K	4800 W
Current rating of AC input coupler	
Roadster S+12K	15 A
Roadster S+16K	20 A
Mirage S+14K	20 A
Roadster S+ 20K	n/a
Type of connector @ projector	
Roadster S+12K	IEC320-C14
Roadster S+16K	IEC320- C19
Mirage S+14K	IEC320- C19
Roadster S+ 20K	n/a — not detachable from projector
Line Cords (3 conductors)	
Roadster S+12K	Heavy duty, 14 AWG
Roadster S+16K	Heavy duty, 12 AWG
Mirage S+14K	Heavy duty, 12 AWG
Roadster S+ 20K	Heavy duty, 12 AWG
Plugs	
Roadster S+12K	NEMA 6-15P, 15 A, 250 VAC
Roadster S+16K	NEMA 6-20P, 20 A, 250 VAC
Mirage S+14K	NEMA 6-20P, 20 A, 250 VAC
Roadster S+20K	L6-30, 30 A, 250 VAC

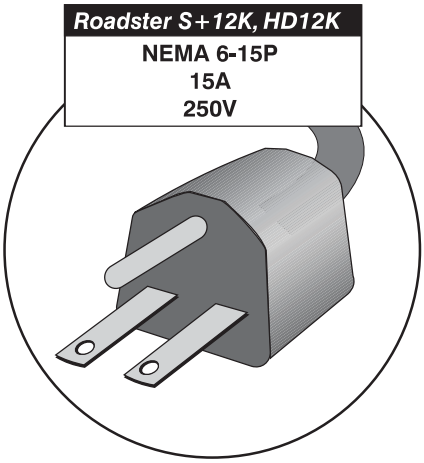

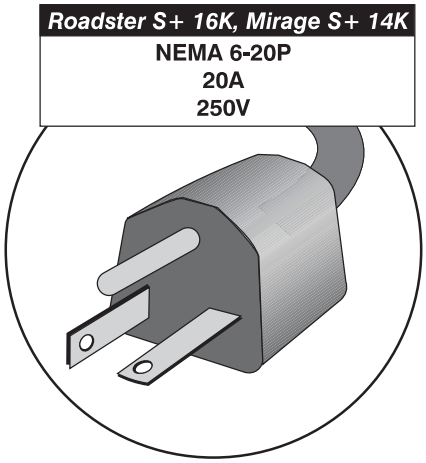

(Roadster S+ 20K plug not shown)

Lamp (DC)

Type	Bubble Xenon lamp
Power	
Roadster S+ 12K	2.0 kW
Roadster S+ 16K	2.4 kW
Mirage S+14K	2.4 kW
Roadster S+ 20K	3.0 kW
Adjustment ranges	
Roadster S+ 12K	1200 – 1900 W
Roadster S+ 16K	1500 – 2400 W
Mirage S+14K	1500 – 2400 W
Roadster S+ 20K	2000 – 3000 W
Lamp Life (warranty hrs.)	
Roadster S+ 12K	1000 hours
Roadster S+ 16K	750 hours
Mirage S+14K	750 hours
Roadster S+ 20K	500 hours
Warm-up time to full brightness	10 minutes max. (20 min for *Roadster S+ 20K*)
Operating position	Any vertical angle. See *Tilt*, below.

Audible Noise ' 58 dBA max. sound power (average at 1 meter, all four sides)

Safety '

Roadster S+12K/16K Mirage S+14K:

UL 60950 and **CAN/CSA C22.2. No. 60950** (2000, 3rd edition bi-national)
IEC 60950 (1999, 3rd edition)
CCC (China Compulsory Certification)
FDA approval for laser in remote IR keypad

Roadster S+20K:

UL 60950-01 1st edition and **CAN/CSA C22.2. No. 60950-01-03** 1st edition
IEC 60950-1: 2001
FDA approval for laser in remote IR keypad

EMC Emissions ' **FCC CFR47, Part 15, Subpart B, Class A** — Unintentional Radiation
CISPR 22: 1997 / EN55022: 1998 — Radio disturbance characteristics for ITE

EMC Immunity ' **CISPR 24 / EN55024:1998** (all parts of immunity characteristics for ITE)

Operating Environment '

Temperature	5°C to 35°C (41°F to 95°F)
Humidity (non-condensing)	20% to 80%
Altitude	0 – 3000 meters
Tilt, Vertical	Unlimited
Tilt, Horizontal	15° max.

Non-Operating Environment '

Temperature	-40C to 70°C (-40F to 149°F)
Humidity (non-condensing)	0% to 95%

Size & Weight

Size (W x L x H of product only, no lens) (including feet at minimum height position)	24" (61 cm) x 32" (81.3 cm) x 15" (38.1cm)
Weight of product (without lens or stackers)	
Roadster S+ 12K	140 lb (63.6 kg)
Roadster S+ 16K	145 lb. (65.9 kg)
Mirage S+ 14K	145 lb. (65.9 kg)
Roadster S+ 20K	160 lb. (73 kg)
Shipping weight in standard packaging	
Roadster S+ 12K	205 lb (93 kg)
Roadster S+ 16K	210 lb. (95 kg)
Mirage S+ 14K	210 lb. (95 kg)
Roadster S+ 20K	225 lb. (102 kg)

Standard Components

Roadster Series

IR keypad, "brick"-style or "lite" *(batteries included)*
Line cord *(**NOTE:** integral on Roadster S+ 20K)*
Roadster/Mirage S+ User's Manual
Dual SD/HD-SDI Module
Stacking mounts
Integral rigging hardware

Mirage S+ 14K

IR Remote "lite" keypad *(batteries included)*
Line cord
Roadster/Mirage S+ User's Manual
3D Stereo Sync Cable
Using 3D in Mirage CD
Using 3D in Mirage manual

Options

Lenses (for standard motorized "Compact" Thunder Lens Mount)

- 0.73 : 1 fixed lens RP – Part # 38-809088-01
- 1.2 : 1 fixed lens FP
- 1.45-1.8 :1 zoom – Part # 38-8090089-01
- 1.8-2.5 :1 zoom – Part # 38-809090-01
- 2.5-4.5 :1 zoom – Part # 38-809091-01
- 4.5-7.3 :1 zoom – Part # 38-809092-01

Manual lens mount for "Legacy" Thunder lenses

Accessories

Remote IR sensor
Service manual
KoRE Librarian
Stacking Hardware for Mirage S+14K
Projector Blinders; part #104-102011

Optional Interface Modules

RGB500 Input Module
RGB400 ALT Input Module
Composite Video Input Module
PC250 Analog Input Module
DVI Input Module
Dual SD/HD-SDI Module

Appendix A

Glossary

This appendix defines terms used in this manual as they apply to this projector.

Active Line Time ' The time, inside one horizontal scan line, during which video is generated.

Ambient Light Rejection ' The ability of a screen to reflect ambient light in a direction away from the "line of best viewing". Curved screens usually have good ambient light rejection. Flat screens usually have less ambient light rejection.

Analog Video ' The video output of most computers and videotape machines. Analog video can generate a large number of colors.

Anamorphic ' Having or requiring a linear distortion, generally in the horizontal direction. Anamorphic lenses can restore a 'scope' (CinemaScope) or 'flat' format film frame to the correct wide-screen appearance by increasing its horizontal proportion.

ANSI ' The American National Standards Institute is the organization that denotes the measurement standard for lamp brightness.

ArtNet Interface ' An Ethernet communication protocol that was developed by Artistic Licence. It is used for controlling lighting/staging equipment from a lighting console or PC application.

Aspect Ratio ' The ratio of the width of an image to its height, such as the 4:3 aspect ratio common in video output. Can also be expressed as a decimal number, such as 1.77, 1.85 or 2.39. The larger the ratio or decimal, the wider and "less square" the image.

Auto Source ' The ability of the projector to automatically recognize and synchronize to the horizontal and vertical scan frequencies of an input signal for proper display.

Bandwidth ' The frequency range of the projector's video amplifier.

Baud Rate ' The speed (bits-per-second) at which serial communications travel from their origin.

Blanking Time ' The time inside one scan line during which video is not generated. The blanking time of the input signal must be equal to or greater than the retrace time of the projector.

Brightness ' In projection, brightness usually describes the amount of light emitted from a surface such as a screen. It is measured in foot-lamberts or candelas per square meter.

Candela or Candle ' Unit of measure for measuring intensity of light.

Channel ' A collection of measurements stored by the projector for a given input source, including frequencies, pulse width, polarity, syncs, channel number and location,

user-adjustable display settings, etc. Use channels to switch between a variety of setups quickly, automatically recalling previously defined display parameters.

Channel List ' A list/menu of previously-defined channels available in projector memory.

Channel Number ' A number that uniquely identifies a specific channel retained in projector memory. The projector can retain up to 50 channels.

Checkbox ' A menu item that indicates whether an option is currently in effect (checked) or not (unchecked).

Chrominance ' The signal representing the color information (hue and saturation) when the image is represented as separate chrominance and *luminance*. Same as "chroma".

Color Gamut ' The range of colors allowed in a specific system, as defined within a triangular area located on the CIE color locus diagram whose corners are the three primaries defined in the system. Also known as color space.

Color Shift ' A change in the tint of a white field across an image.

Color Temperature ' The coloration (reddish, white, bluish, greenish, etc.) of white in an image, measured using the Kelvin (degrees K) temperature scale. Higher temperatures output more light.

Component Video ' See YCbCr or YPbPr.

Composite Video ' The output of video tape players and some computers, characterized by synchronization, luminance and color signals combined on one output cable.

Contrast (ratio) ' The degree of difference between the lightest and darkest areas of the image.

Convergence ' The alignment of the red, green, and blue elements of a projected image so that they appear as a single element.

Curved Screen ' A projection screen which is slightly concave for improved screen gain. Curved screens usually have screen gains, which are greater than 1 but viewing angles much less than 180°. Curved screens are not recommended for use with this projector.

Cross-talk ' This 3D phenomenon is characterized by blurred edges throughout an image so that the image resembles two misaligned images. It is caused by one or more 3D components being out of sync with the others so that one eye that sees a portion of the data intended for the other eye. Also known as ghosting.

DDC ' The Display Data Channel VESA standard enables communication between PCs and monitors, and is based on E-EDID protocol.

DDI ' A "direct digital interface" signal can be supplied to the projector via an optional digital input module installed in **INPUT 5**. For example, you can input an SMPTE-259M signal using a *Serial Digital Input Module* or input an SMPTE-272M signal from a *Digital HDTV Serial Input Module*.

DMD™ ' Digital Micromirror Devices™ used in this projector for processing red, green, and blue color data.

Decoder ' Located at **INPUT 3** and **INPUT 4**, this device converts NTSC 3.58, NTSC 4.4, PAL, PAL-N, PAL-M, or SECAM to RGB video.

Detail ' The sharpness of a display from a video source.

Diffused Screen ' A type of rear-projection screen which spreads the light striking it. Screen gain is less than 1 but audience viewing angles are increased.

Display Setting ' An adjustment that affects the display of an image. Such display settings include contrast, brightness, tint, blanking, size, offsets, and others.

Dot Clock ' The maximum frequency of the pixel clock. Also known as pixel clock rate.

E-EDID ' The Enhanced Extended Display Identification Data standard, established by VESA, enables properties (such as resolution) of a display device to be detected by the display card in a controlling device such as a PC. The PC, in turn, can then output in a matching format to fill the display. Some sources used with the projector are VESA E-EDID reported.

Flicker ' A very rapid variation in image brightness caused by a frame rate that is too slow. (See *Interlace*) See also *Lamp Flicker*.

Foot-candle ' The intensity of visible light per square foot.

Foot-lambert ' The luminance (brightness) which results from one foot-candle of illumination falling on a perfectly diffuse surface.

Frame Rate ' The frequency at which complete images are generated. For non-interlaced signals, the frame rate is identical to the vertical frequency. For interlaced signals, the frame rate (also known as field rate) is one half of vertical frequency.

Gain or Screen Gain ' The ability of a screen to direct incident light to an audience. A flat matte white wall has a gain of approximately 1. Screens with gain less than 1 attenuate incident light; screens with gain more than 1 direct more incident light to the audience but have a narrow viewing angle. For example: An image reflecting off a 10 gain screen appears 10 times brighter than it would if reflected off a matte white wall. Curved screens usually have larger gain than flat screens.

Ghosting ' See Cross-talk.

GPIO ' General Purpose Input Output, used for remote control of a limited number of programmable functions by direct signal or dry-contact connection.

HDTV ' High-definition Television (1035, 1080 and 1125 lines interlace, and 720 and 1080 line progressive formats with a 16:9 (i.e. 1.77) aspect ratio.

Help Text ' A display of help information regarding the current task or presentation.

Horizontal Frequency ' The frequency at which scan lines are generated, which varies amongst sources. Also called horizontal scan rate or line rate.

Horizontal Offset ' The difference between the center of the projected image and the center of the projector lens. For this projector, this value is expressed as the maximum percentage of the image that can be projected to one side of the lens center without degrading the

image quality. Horizontal offset ranges can be affected by the type of lens in use, and whether or not the image is offset vertically at the same time.

Hot Spot ' A circular area of a screen where the image appears brighter than elsewhere on the screen. A hot spot appears along the line of sight and "moves" with the line of sight. High gain screens and rear screens designed for slide or movie projection usually have a hot spot.

Input ' A physical connection route for a source signal, described by a 2-digit number representing 1) its switcher/projector location and 2) its slot in the switcher/projector.

Input Signal ' Signal sent from a source device to the projector.

Interface ' A device, such as the *Serial Digital Input Module*, that accepts an input signal for display by the projector.

Interlace ' A method used by video tape players and some computers to double the vertical resolution without increasing the horizontal line rate. If the resulting frame/field rate is too low, the image may flicker depending on the image content.

Keypad ' A small push-button device for controlling most projector settings and operation. For more information, refer to *3.3, Using the Keypad.*

Keystone ' A distortion of the image which occurs when the top and bottom borders of the image are unequal in length. Side borders both slant in or out, producing a "keyhole" shaped image. It is caused when the screen and lens surface are not parallel, or by poor Keystone adjustment.

Latency ' The time from input to output.

Linearity ' The reproduction of the horizontal and vertical size of characters and/or shapes over the entire screen.

Line of Best Viewing ' When light from a projector is incident on a screen, the light reflects from the screen such that the angle of reflection equals the angle of incidence. The Line of Best Viewing is along the line of reflection.

Loopthrough (Loopthru) ' The method of feeding a series of high impedance inputs from a single video source with a coaxial transmission line in such a manner that the line is terminated with its characteristic impedance at the last input on the line.

Lumen ' The unit of measure for the amount of visible light emitted by a light source.

Luminance ' The signal representing the measurable intensity (comparable to brightness) of an electronic image when the image is represented as separate *chrominance* and *luminance*. Luminance also expresses the light intensity of a diffuse source as a function of its area; measured in lumens or candles per square foot (1 lumen per square foot = 1 *foot-lambert*). SMPTE RP 98 calls for a luminance of 12 to 22 foot-lamberts for theatre screens. See: *Foot-lambert*.

Lux ' The amount of visible light per square meter incident on a surface.
1 lux = 1 lumen/square meter = 0.093 foot-candles

Menu ' A list of selectable options displayed on the screen.

NTSC Video ' A video output format of some video tape and disk players. There are two types of NTSC (National Television Standards Committee) video: NTSC 3.58 and NTSC 4.43. NTSC 3.58 is used primarily in North America and Japan. NTSC 4.43 is less commonly used.

Optical Screen ' A type of rear-projection screen which re-directs light through the screen to increase image brightness in front of the screen. Screen gain is usually greater than 1 but audience viewing angles are reduced.

PAL Video ' PAL (Phase Alternating Line) video is a 50 Hz standard with 768 x 576 resolution. It is found on some video tape and disk players (used primarily in Europe, China and some South American and African countries).

Pixel ' The smallest discernible element of data from a computer-generated image.

Pixel Phase ' The phase of the pixel sampling clock relative to incoming data.

Pixel Tracking ' The frequency of the pixel sampling clock, indicated by the number of pixels per line.

Presentation Level ' The projector is at presentation level when an image from a source is displayed without the presence of a slidebar, menu, pull-down list, or error message.

Projector-to-Screen Distance ' The distance between the projector's front feet centers and the screen. Also called "Throw Distance".

Protocol ' The type of code format called "A" or "B" utilized by the remote keypad(s). The default protocol set at manufacture is Protocol "A". By using two different keypad protocols, adjacent projectors can be controlled independently with their remote IR keypads.

Pull-down List ' A selectable menu item that unfolds into a list of options pertaining to it.

QuVis ' A manufacturer of a digital video recorder/player/server, QuBit, frequently used for providing digital cinema data. QuVis image compression uses a proprietary technology called Quality Priority Encoding, based on *wavelets*, in which the user selects a quality level based on *signal-to-noise ratio*. The data rate varies to efficiently maintain that quality level. Frames are coded individually.

Rear Screen ' A translucent panel for screen projection. Incident light travels through the incident surface of a rear screen and forms an image on the other surface.

Resizing ' The ability to manipulate through software commands the physical size, placement and/or aspect ratio of an image.

Resolution (lens) ' The maximum number of alternate white and black horizontal lines that can be distinguished on a screen when a photographic target is placed between the lens and a light source and illuminated by that source.

Resolution (projector) ' The maximum number of pixels that the projector can display horizontally and vertically across an image, such as 1024 x 768 (called XGA).

Retrace Time (Horizontal) ' The minimum time required for a CRT projector to move the position of the scanning spot from the right edge to the left edge.

Rise Time ' The time required by the video amplifier of the projector to increase its output from 10% to 90% of the maximum value.

RGB Video ' The video output (analog or digital) of most computers. Analog RGB video can have 3, 4, or 5 wires — one each for red, green, and blue, and either none, one or two for sync. For three-wire RGB, the green wire usually provides sync. (See TTL Video).

RS232 ' A common asynchronous data transmission standard recommended by the Electronics Industries Association (EIA). Also called serial communication.

RS422 ' A less common asynchronous data transmission standard in which balanced differential voltage is specified. RS422 is especially suited to long distances.

S-Video ' The output from certain video tape players and video equipment. S-Video separates sync and luminance from color information, typically producing a higher quality display than composite video.

Scan Frequency ' The horizontal or vertical frequency at which images are generated. Also known as scan rate or refresh rate.

Scan Line ' One horizontal line on the display.

Scan Rate ' The horizontal or vertical frequency at which images are generated.

SECAM ' A video output format of some video tape and disk players (used primarily in France). SECAM (Sequential Couleur á Mémoire) signals are similar in resolution and frequency to PAL signals. The primary difference between the two standards is in the way color information is encoded.

Slidebar ' A slidebar is a graphical display of an adjustable setting. The numerical setting often represents a percentage but can be a specific unit such as degrees Kelvin.

Source ' The device, such as a computer or VCR, connected to the projector for display. A source may have numerous corresponding channels defined and recognized by the projector. See *Input*.

Source Setup ' See Channel.

Switcher ' A signal selector that can be connected to a projector for the purpose of adding more sources.

Sync ' This term refers to the part of the video signal that is used to stabilize the picture. Sync can occur in three forms:

1) "Composite sync": the horizontal and vertical components are together on one cable.
2) "Sync-on-green": the sync is part of the green video.
3) "Separate sync" or "H.SYNC and V.SYNC": the horizontal and vertical components of the sync are on two separate cables.

Sync Width ' The duration of each sync pulse generated by a computer. The sync width is part of the blanking time.

TTL Video ' A type of RGB video with digital characteristics.

Terminated ' A wire connecting a single video source to a display device, such as a projector, must be terminated by a resistance (usually 75Σ for video).

Throw Distance ' The distance between the front feet of the projector and the screen. Also called "Projector-to-Screen Distance". Always use the correct Christie throw distance formula to calculate the proper throw distance (±5%) required for your lens.

Throw Ratio ' Throw ratio = throw distance / screen width. Typically used to differentiate lenses.

Tint ' Balance of red-to-green necessary for realistic representation of NTSC signals.

Variable Scan ' The ability of a projector to synchronize to inputs with frequencies within a specified range.

Vertical Frequency ' The frequency at which images are generated. Vertical frequencies vary amongst sources. Also called vertical scan rate.

Vertical Offset ' The difference between the center of the projected image and the center of the projector lens. For this projector, this value is expressed as the maximum percentage of the image that can be projected above or below the lens center without degrading the image quality. Vertical offset ranges depend on the type of lens in use, and whether or not the image is offset horizontally at the same time.

Video ' The signal that is used by display devices (such as projectors) to generate an image. This term also refers to the output of video tape/disk players and computers.

Video Decoder ' An optional device that converts NTSC 3.58, NTSC 4.4, PAL, PAL-N, PAL-M or SECAM to RGB video.

Video Standard ' A specific type of video signal, such as NTSC, PAL, SECAM. This projector can automatically recognize and interpret the incoming standard and display accordingly.

Viewing Angle ' Screens do not reflect equally in all directions. Most light is reflected in a conical volume centered around the "line of best viewing". Maximum brightness is perceived if you are within the viewing cone defined by the horizontal and vertical viewing angles.

White Balance ' The color temperature of white used by the projector.

White Field ' The area of an image that is white only. For example, a full white field is an image that is white everywhere. A 10% white field is a white area (usually rectangular) that occupies 10% of the image; the remaining 90% is black.

YCbCr ' A high-end *digital* component video signal.

YPbPr ' A high-end *analog* component video signal. Sometimes called YUV, Component, or Y, R-Y, B-Y, the YPbPr signal by-passes the video decoder in this projector.

YUV ' See *YPbPr*.

Zoom ' The adjustment of image size by means of a zoom lens.

Appendix B

Keypad Reference

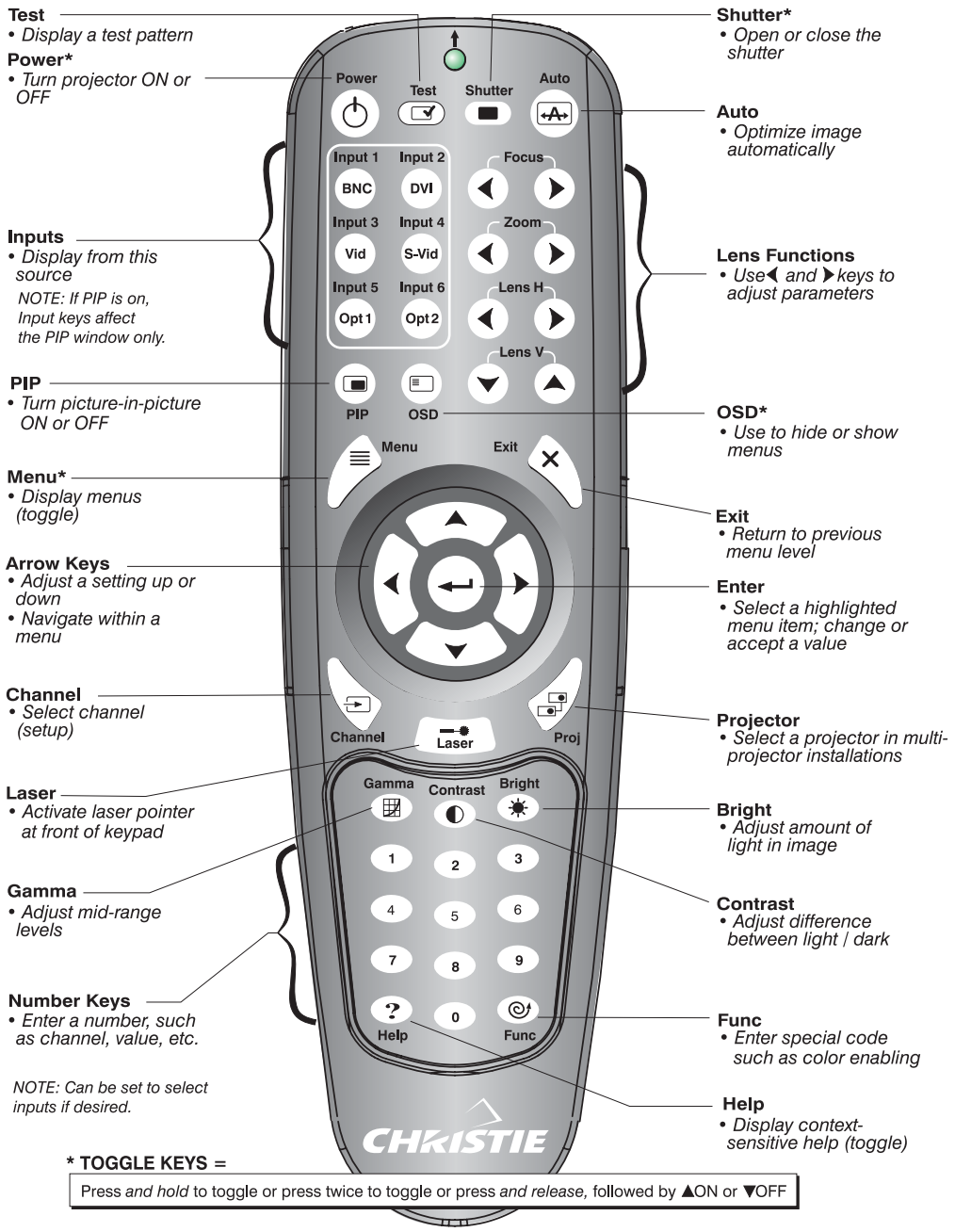

Figure B-1. Remote Keypad

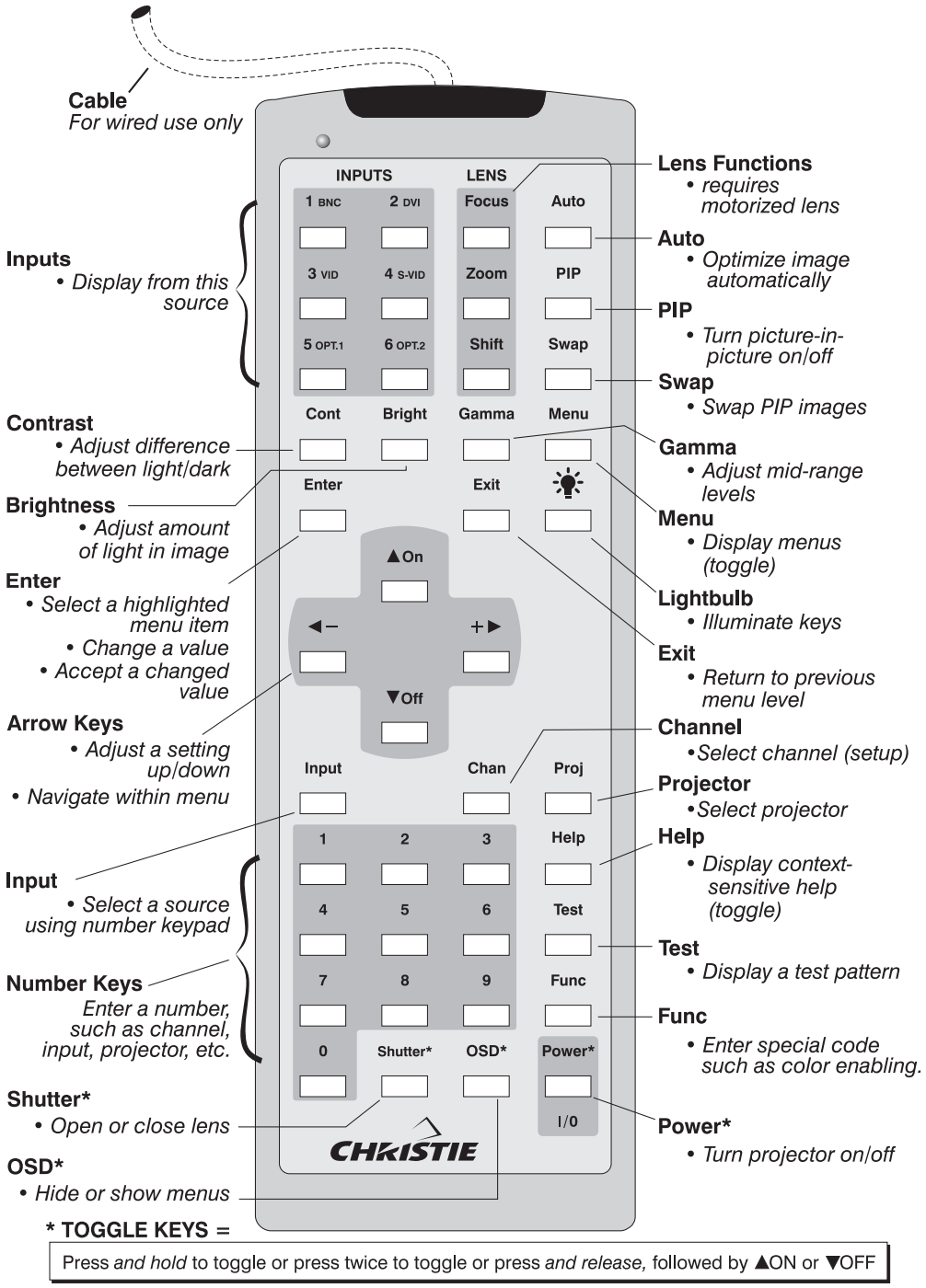

Figure B-2. "Brick" Rental Staging Remote (Roadster)

.

Appendix C

Serial Communication Cables

A serial link of RS232 or RS422 enables ASCII communication with the projector so that it can be controlled remotely from a PC or other controller. From a PC, connect a standard 9-wire RS232 serial cable to the **RS232 IN** port located on the side of the projection head. Or, for long-distance (>100 ft.) links with an RS422-compatible PC or controller, connect RS422 cable to the **RS422** port.

❑ ***From projector to computer (RS232)***

For computers having a 9-pin "AT" type serial port

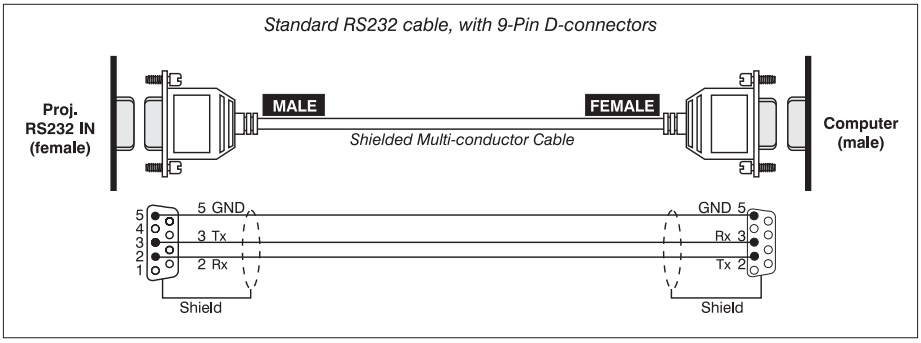

❑ ***From projector to projector***

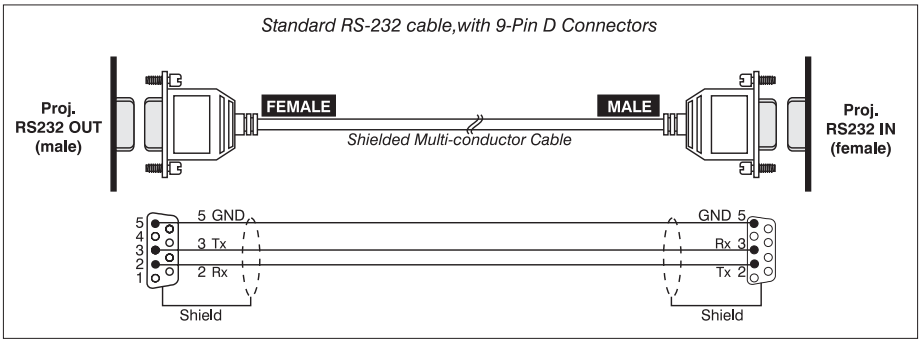

❑ *From projector to RS422 compatible computer*

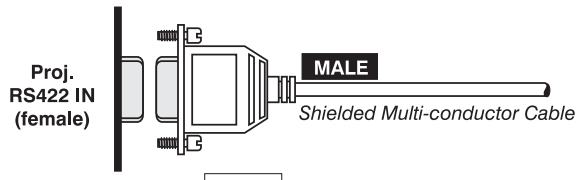

Wiring

5	TXD+	9	+12V
4	RXD+	8	n/c
3	TXD-	7	GND
2	RXD-	6	n/c
1	n/c		

- *Wiring from your controller (or RS232-to-RS422 adapter) may vary. Consult the documentation for your device.*
- *Connect Tx+ to Rx+*
- *Connect Tx- to Rx-*
- *Connect Rx+ to Tx+*
- *Connect Rx- to Tx-*

Appendix D

Throw Distance

Always consult this Appendix when planning a projector installation. See also ***2.3, Projector Position and Mounting.***

Calculating Throw Distance

Throw Distance (TD) = (Screen Width X Lens Type)

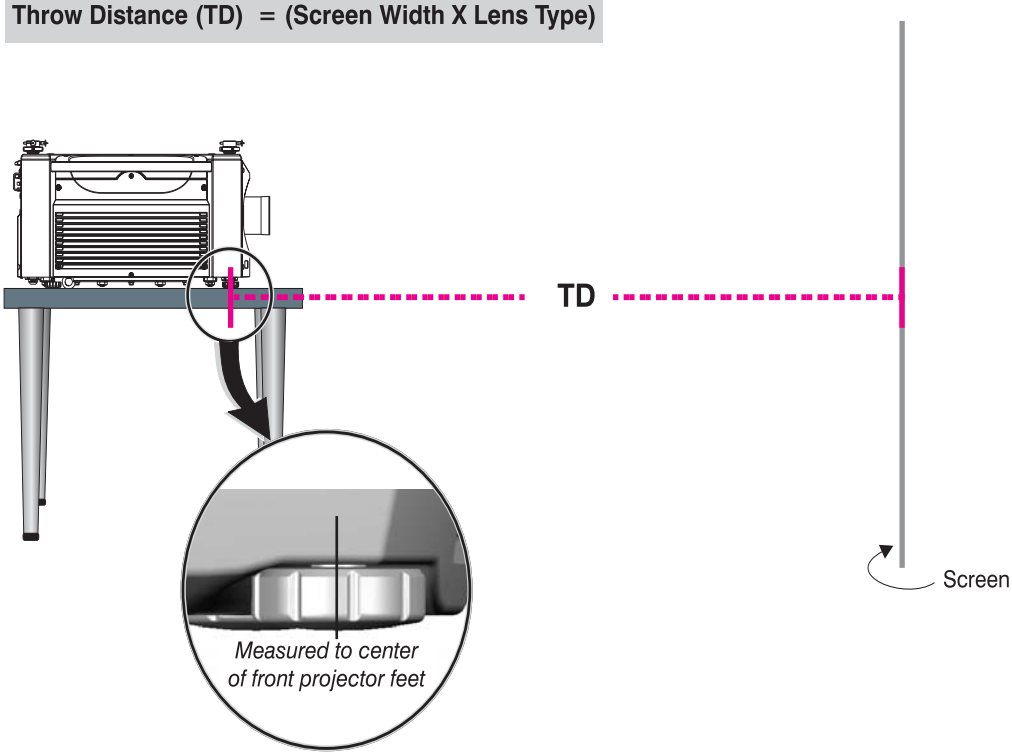

Figure D-1. Calculating Throw Distance

Correct throw distance depends on the screen size and lens present—the larger the image needed, the greater the distance you must allow between the lens and screen. Once you know the screen size and lens type present, you can calculate the precise throw distance you require by using the appropriate formula as found in this appendix.

Throw distance is the distance between the projector front feet and the screen (Figure D-1). This measurement is not necessarily parallel to the floor—i.e., the projector and screen may both be inclined.

NOTE: *If your projector is tilted up or down in relation to the screen, typical in large venues or elevated installations, throw distance still represents the smallest measurement between the screen and front feet center axes.*

Figure D-1 provides the recommended throw distance formulas for each of the "Compact" Thunder Lenses. Pre-calculated throw distances for the complete range of lens types and screen sizes appear in the charts and graphs on the following pages. Refer to these examples to quickly determine the proper throw distance (±5%) for your installation and lens.

Table D-1. Throw Distance Formulas

Lens Throw Ratio	*Throw Distance Formula cm (in.) ±5%*	*Diagonal Screen Size*	
		in	*cm*
0.73:1 Fixed	0.7588 x screen width (↔ cm) + 31.211 cm	73-215	188-548
1.2:1 Fixed (short)	N/A	N/A	N/A
1.2:1 Fixed (long)	1.25 x screen width (↔ cm) + 13.6 cm	37-383	95-973
1.45 – 1.8:1	Min 1.4781 x screen width (↔ cm) +19.576 cm Max: 1.839 x screen width (↔ cm) + 21.392 cm	64-536	163-1375
1.8 – 2.5	Min: 1.8301 x screen width (↔ cm) – 5.828 cm Max: 2.6019 x screen width (↔ cm) – 3.251 cm	56-536	145-1375
2.5 – 4.5	Min 2.6147 x screen width (↔ cm) – 5.8132 cm Max 4.7718 x screen width (↔ cm) – 25.91 cm.	66-536	169-1375
4.5 – 7.3	Min: 4.5727 x screen width (↔ cm.) – 9.0449 cm Max: 7.4058 x screen width (↔ cm) – 21.974 cm	78-536	200-1375

NOTES:1) *Make sure to use HORIZONTAL screen size in all formulas.* ***2)****Calculations not available for 1.2:1 Fixed lenses.*

Throw Distances for Compact Thunder Lenses

0.73:1 Fixed Lens			
Image Width (↔)		**Throw distance**	
cm	**in**	**cm**	**in**
150	59	145	57
165	64	156	61
180	70	168	65
195	76	179	70
210	82	191	74
225	88	202	79
240	94	213	83
255	100	225	88
270	105	236	92
285	111	248	97
300	117	259	101
315	123	270	105
330	129	282	110
345	135	293	114
360	140	304	119
375	146	316	123
390	152	327	128
405	158	339	132
420	164	350	137
435	170	361	141
438	171	364	142

NOTE: *Maximum throw distance=10m (33 ft.). Use throw distance of 1.0-1.3m (39-51") for optimized lens performance.*

1.45 – 1.8:1 Lens			
1.45 Zoom			
Image Width (↔)		Throw Distance	
cm	in	cm	in
160	62	256	100
175	68	278	109
190	159	300	117
205	80	323	126
220	86	345	134
235	92	367	143
250	98	389	152
265	103	411	160
280	109	433	169
295	115	456	178
310	121	478	186
325	127	500	195
340	133	522	204
355	138	544	212
370	144	566	221
385	150	589	230
400	156	611	238
415	162	633	247
430	168	655	256
445	174	677	264
460	179	700	273
475	185	722	281
490	191	744	290
505	197	766	299
520	203	788	307
535	209	810	316
550	215	833	325
565	220	855	333
580	226	877	342
595	232	899	351
610	238	921	359
625	244	943	368
640	250	966	377
655	255	988	385
670	261	1010	394
685	267	1032	403
700	273	1054	411
715	279	1076	420
730	285	1099	428
745	291	1121	437
760	296	1143	446
775	302	1165	454
790	308	1187	463
805	314	1209	472
820	320	1232	480
835	326	1254	489
850	332	1276	498
865	337	1298	506
880	343	1320	515
889	347	1334	520
895	349	1342	524
910	355	1365	532
925	361	1387	541
940	367	1409	550
955	372	1431	558
970	378	1453	567
985	384	1476	575
1000	390	1498	584
1015	396	1520	593
1030	402	1542	601
1045	408	1564	610
1060	413	1586	619
1075	419	1609	627
1090	425	1631	636
1100	429	1645	642

1.45 – 1.8:1 Lens			
1.8 Zoom			
Image Width (↔)		Throw Distance	
cm	in	cm	in
127	50	255	99
130	51	260	102
145	57	288	112
160	62	316	123
175	68	343	134
190	74	371	145
205	80	398	155
220	86	426	166
235	92	454	177
250	98	481	188
265	103	509	198
280	109	536	209
295	115	564	220
310	121	591	231
325	127	619	241
340	133	647	252
355	138	674	263
370	144	702	274
400	156	757	295
415	162	785	306
430	168	812	317
445	174	840	328
460	179	867	338
475	185	895	349
490	191	923	360
505	197	950	371
520	203	978	381
535	209	1005	392
550	215	1033	403
565	220	1060	414
580	226	1088	424
595	232	1116	435
610	238	1143	446
625	244	1171	457
640	250	1198	467
655	255	1226	478
670	261	1254	489
685	267	1281	500
700	273	1309	510
715	279	1336	521
730	285	1364	532
745	291	1391	543
760	296	1419	553
775	302	1447	564
790	308	1474	575
805	314	1502	586
820	320	1529	596
835	326	1557	607
850	332	1585	618
865	337	1612	629
880	343	1640	639
889	347	1656	646

1.8 – 2.5:1 Lens			
1.8 Zoom			
Image Width (↔)		Throw Distance	
cm	in	cm	in
161	63	289	113
165	64	296	115
180	70	324	126
195	76	351	137
210	82	378	148
225	88	406	158
240	94	433	169
255	99	461	180
270	105	488	190
285	111	516	201
300	117	543	212
315	123	571	223
330	129	598	233
345	135	626	244
360	140	653	255
375	146	680	265
390	152	708	276
405	158	735	287
420	164	763	297
435	170	790	308
450	176	818	319
465	181	845	330
480	187	873	340
495	193	900	351
510	199	928	362
525	205	955	372
550	215	1001	390
565	220	1028	401
570	222	1037	405
585	228	1065	415
600	234	1092	426
615	240	1120	437
630	246	1147	447
645	252	1175	458
660	257	1202	469
675	263	1229	480
690	269	1257	490
705	275	1284	501
720	281	1312	512
735	287	1339	522
750	293	1367	533
765	298	1394	544
780	304	1422	554
795	310	1449	565
810	316	1477	576
825	322	1504	587
840	328	1531	597
855	333	1559	608
870	339	1586	619
885	345	1614	629

1.8 – 2.5:1 Lens			
1.8Zoom			
Image Width (↔)		Throw Distance	
cm	cm	cm	cm
900	351	1641	640
915	357	1669	651
930	363	1696	662
945	369	1724	672
960	374	1751	683
975	380	1779	694
990	386	1806	704
1005	392	1833	715
1020	398	1861	726
1035	404	1888	736
1050	410	1916	747
1065	415	1943	758
1080	421	1971	769
1095	427	1998	779

1.8 – 2.5:1 Lens			
2.5 Zoom			
Image Width (↔)		Throw Distance	
cm	in	cm	in
116	45	289	113
130	51	325	127
145	57	364	142
160	62	403	157
175	68	442	172
190	74	481	188
205	80	520	203
220	86	559	218
235	92	598	233
250	98	637	249
265	103	676	264
280	109	715	279
295	115	754	294
310	121	793	309
325	127	832	325
340	133	871	340
355	138	910	355
370	144	949	370
385	150	988	386
400	156	1028	401
415	162	1067	416
430	168	1106	431
445	174	1145	446
460	179	1184	462
475	185	1223	477
490	191	1262	492
505	197	1301	507
520	203	1340	522
535	209	1379	538
550	215	1418	553
565	220	1457	568
580	226	1496	583
595	232	1535	599
610	238	1574	614
625	244	1613	629
640	250	1652	644
655	255	1691	659
670	261	1730	675
685	267	1769	690
700	273	1808	705
715	279	1847	720
730	285	1886	736
745	291	1925	751
760	296	1964	766
775	302	2003	781
790	308	2042	796

1.8 – 2.5:1 Lens			
2.5 Zoom			
Image Width (↔)		Throw Distance	
cm	in	cm	in
800	312	2068	807
805	314	2081	812
820	320	2120	827
835	326	2159	842
850	332	2198	857
865	337	2237	873
880	343	2276	888
895	349	2315	903
910	355	2354	918
925	361	2394	933
940	367	2433	949
955	372	2472	964
970	378	2511	979
985	384	2550	994
1000	390	2589	1010
1015	396	2628	1025
1030	402	2667	1040
1045	408	2706	1055
1060	413	2745	1070
1075	419	2784	1086
1090	425	2823	1101
1100	429	2849	1111

2.5 – 4.5:1 Lens			
2.5 Zoom			
Image Width (↔)		Throw Distance	
cm	in	cm	in
244	95	632	247
245	96	635	248
260	101	674	263
275	107	713	278
290	113	752	293
305	119	792	309
320	125	831	324
335	131	870	339
350	137	909	355
365	142	949	370
380	148	988	385
395	154	1027	401
410	160	1066	416
425	166	1105	431
440	172	1145	446
455	177	1184	462
4730	1845	12362	4821
485	189	1262	492
500	195	1302	508
515	201	1341	523
530	207	1380	538
545	213	1419	553
560	218	1458	569
575	224	1498	584
590	230	1537	599
605	236	1576	615
620	242	1615	630
635	248	1655	645
650	254	1694	661
665	259	1733	676
680	265	1772	691
695	271	1811	706
710	277	1851	722
725	283	1890	737
740	289	1929	752
755	294	1968	768
770	300	2008	783
785	306	2047	798
800	312	2086	814
815	318	2125	829
830	324	2164	844
845	330	2204	859
860	335	2243	875
875	341	2282	890
890	347	2321	905

2.5 – 4.5:1 Lens			
2.5 Zoom			
Image Width (↔)		Throw Distance)	
cm	cm	cm	cm
905	353	2360	921
920	359	2400	936
935	365	2439	951
950	371	2478	966
965	376	2517	982
980	382	2557	997
995	388	2596	1012
1010	394	2635	1028
1025	400	2674	1043
1040	406	2713	1058
1055	411	2753	1074
1070	417	2792	1089
1085	423	2831	1104
1100	429	2870	1119

2.5 – 4.5:1 Lens			
4.5 Zoom			
Image Width (↔)		Throw Distance	
cm	in	cm	in
136	53	623	243
140	55	642	250
155	60	714	278
170	66	785	306
185	72	857	334
200	78	928	362
215	84	1000	390
230	90	1072	418
245	96	1143	446
260	101	1215	474
275	107	1286	502
290	113	1358	530
305	119	1429	558
320	125	1501	585
335	131	1573	613
350	137	1644	641
365	142	1716	669
380	148	1787	697
395	154	1859	725
410	160	1931	753
425	166	2002	781
440	172	2074	809
455	177	2145	837
470	183	2217	865
485	189	2288	892
500	195	2360	920
515	201	2432	948
530	207	2503	976
545	213	2575	1004
560	218	2646	1032
575	224	2718	1060
580	226	2742	1069
605	236	2861	1116
620	242	2933	1144
635	248	3004	1172
650	254	3076	1200
665	259	3147	1227
68	27	299	116
695	271	3290	1283
710	277	3362	1311
125	49	571	223
740	289	3505	1367
755	294	3577	1395
770	300	3648	1423
785	306	3720	1451
800	312	3792	1479

2.5 – 4.5:1 Lens			
4.5 Zoom			
Image Width (↔)		Throw Distance	
cm	in	cm	in
815	318	3863	1507
830	324	3935	1535
845	330	4006	1562
860	335	4078	1590
875	341	4149	1618
890	347	4221	1646
905	353	4293	1674
920	359	4364	1702
935	365	4436	1730
950	371	4507	1758
965	376	4579	1786
980	382	4650	1814
995	388	4722	1842
1010	394	4794	1870
1025	400	4865	1897
1040	406	4937	1925
1055	411	5008	1953
1070	417	5080	1981
1085	423	5151	2009
1100	429	5223	2037

4.5 – 7.3:1 Lens			
4.5 Zoom			
Image Width (↔)		Throw Distance	
cm	in	cm	in
267	104	1212	473
280	109	1271	496
295	115	1340	523
310	121	1408	549
325	127	1477	576
340	133	1546	603
355	138	1614	630
370	144	1683	656
385	150	1751	683
400	156	1820	710
415	162	1889	737
430	168	1957	763
445	174	2026	790
460	179	2094	817
475	185	2163	844
490	191	2232	870
505	197	2300	897
520	203	2369	924
535	209	2437	951
550	215	2506	977
565	220	2575	1004
580	226	2643	1031
595	232	2712	1058
610	238	2780	1084
625	244	2849	1111
640	250	2917	1138
655	255	2986	1165
670	261	3055	1191
685	267	3123	1218
700	273	3192	1245
715	279	3260	1272
730	285	3329	1298
745	291	3398	1325
760	296	3466	1352
775	302	3535	1379
790	308	3603	1405
805	314	3672	1432
820	320	3741	1459
835	326	3809	1486
850	332	3878	1512
865	337	3946	1539
880	343	4015	1566
895	349	4084	1593
910	355	4152	1619
925	361	4221	1646

4.5 – 7.3:1 Lens			
4.5 Zoom			
Image Width (↔)		Throw Distance	
cm	in	cm	in
955	372	4358	1700
970	378	4426	1726
985	384	4495	1753
1000	390	4564	1780
1015	396	4632	1807
1030	402	4701	1833
1045	408	4769	1860
1060	413	4838	1887
1075	419	4907	1914
1090	425	4975	1940
1100	429	5021	1958

4.5 – 7.3:1 Lens			
7.3 Zoom			
Image Width (↔)		Throw Distance	
cm	in	cm	in
164	64	1193	465
175	68	1274	497
190	74	1385	540
205	80	1496	584
220	86	1607	627
235	92	1718	670
250	98	1829	713
265	103	1941	757
280	109	2052	800
295	115	2163	843
310	121	2274	887
325	127	2385	930
340	133	2496	973
355	138	2607	1017
370	144	2718	1060
385	150	2829	1103
400	156	2940	1147
415	162	3051	1190
430	168	3163	1233
445	174	3274	1277
460	179	3385	1320
475	185	3496	1363
490	191	3607	1407
505	197	3718	1450
520	203	3829	1493
535	209	3940	1537
550	215	4051	1580
565	220	4162	1623
580	226	4273	1667
595	232	4384	1710
610	238	4496	1753
625	244	4607	1797
640	250	4718	1840
655	255	4829	1883
670	261	4940	1927
685	267	5051	1970
700	273	5162	2013
715	279	5273	2057
730	285	5384	2100
745	291	5495	2143
760	296	5606	2187
775	302	5718	2230
790	308	5829	2273
805	314	5940	2316
820	320	6051	2360
835	326	6162	2403

4.5 – 7.3:1 Lens			
7.3 Zoom			
Image Width (↔)		Throw Distance	
cm	in	cm	in
1360	530	10050	3919
1100	429	8124	3169
1090	425	8050	3140
1075	419	7939	3096
1045	408	7717	3010
1030	402	7606	2966
1015	396	7495	2923
1000	390	7384	2880
985	384	7273	2836
970	378	7162	2793
955	372	7051	2750
940	367	6939	2706
925	361	6828	2663
910	355	6717	2620
895	349	6606	2576
880	343	6495	2533
865	337	6384	2490
850	332	6273	2446

Appendix E

System Integration

The GPIO (General Purpose Input/Output) connector located on the input panel provides a flexible method of interfacing a wide range of external I/O devices to the projector. There are 7 GIO pins available on the 9pin D-Sub GPIO connector, which are configurable via RS232 commands. The other two pins are reserved for ground and power – see table below for pin identification.

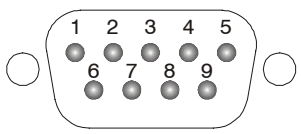

GPIO Pins

Pin #	Signal
1	+ 12V (200mA)
2	GPIO 1
3	GPIO 2
4	GPIO 3
5	Ground
6	GPIO 4
7	GPIO 5
8	GPIO 6
9	GPIO 7

The serial cable required for connecting the external device to the projector's GPIO connector, whether it's a standard serial cable or a custom one, must be compatible with the external device.

Configuring the GPIO

The GPIO connector can be configured to automate any number of events using the serial command code **GIO**. Each pin is defined as either an ***input*** or ***output*** depending on the desired outcome. In general, configure the pin as an input if you want the projector to respond to something the device does and as an output if you want the external device to respond to an action taken by the projector. For example, configure the pin as an output if you want the lighting in a room to automatically dim when the projector is turned on.

By using the GIO command, you can also set the state of each pin as ***high*** or ***low***. By default, the state of each pin is ***high.*** The voltage applied to pins in the *high* state is + 3.3V.

Example 1. Turn room lighting on when the projector is turned off. (Assumes a control/automation unit is configured to turn the lights on when pin 2 of its input goes high.)

(GIO C2 O) *Set pin #2 configuration to output*

(GIO 2 H) *Set pin #2 to high (state)*

Query Command ' *(GIO?)* *Request the state and configuration of all pins*

(GIO! "HHLLHLH" "OOIOOOI") Reply of pin state and configuration

(GIO? C2) *Request configuration for pin #2*

(GIO! C2 O) *Reply with pin #2 configuration as output*

(GIO? 2) *Request the state of pin #2*

(GIO! H) *Reply with pin #2 state as high*

Real Time Event ' Use the serial command **RTE** to specify an action that is initiated at a particular time or based on an external stimulus.

For General Purpose IO "G"

Parameter	Name	Value
P1	RTE type	G (Real Time I/O Event)
P2	I/O bit	1-7
P3	Pin state (1 Character) (String)	H = High L = Low "LHXXXHL" Combine multiple inputs and trigger occurs when all conditions are met
P4	Commands	Any valid serial protocol command for the device

Example 2. Projector powers up when a switch on the external device is turned on.

(GIO C2 I) *Set pin #2 configuration as input*

(RTE G 2 H "(PWR 1)") Power on when pin #2 set to high

(RTE G 2 L "(PWR 0)") Power off when pin #2 set to low

Appendix F

Optional Input Modules

The following optional input modules can be installed in either option slot in the projector (**INPUT 5** or **INPUT 6**). Contact your dealer for a complete an up-to-date listing.

NOTES:1) *Optional interface modules can be hot-swapped into a running projector.*
2) *Any audio connectors shown are non-functional in this projector.*

Dual SD/HD-SDI 38-804656-xx

NOTE: *Standard with Roadster models. See Section 2.*

The *Dual SD/HD-SDI Module* enables incoming SD or HD serial digital data to be tiled across multiple screen displays, overlapped for extra-bright displays, or distributed to additional projectors for multiple, same-image screens.

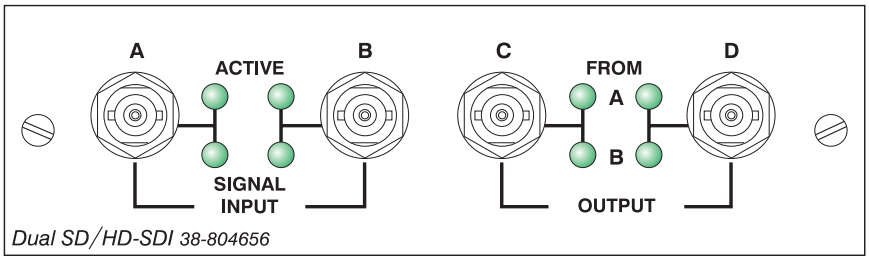

Dual SD/HD-SDI Features

- ◊ Accepts and decodes up to two serial digital inputs
- ◊ SMPTE 292, 259M and 372 compatible
- ◊ Outputs up to two 10-bit YCbCr 4:2:2 video signals
- ◊ Provides input(s) to output(s) loop-through capability
- ◊ Supplies interchangeable inputs as part of the Picture-in Picture display

RGB500 Input Module 38-804606-xx

The *RGB500 Input Module* receives analog RGB input signals from computers or other RGB source devices.

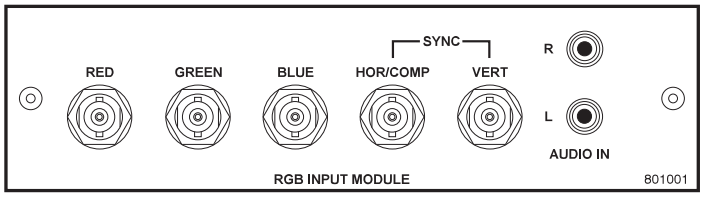

RGB500 Features

- ◊ Accepts 3, 4, or 5 wire RGB video (sync-on-green, composite sync, or separate horizontal and vertical sync), up to 500 MHz bandwidth
- ◊ Accepts YPbPr, composite (on green) and Y/C (on red/blue)
- ◊ BNC connectors for RGB signal inputs

RGB400BA Input Module 38-804610-xx

Connect three-, four-, or five-wire RGB video signals of up to 400 MHz bandwidth—these are signals typically produced by high-resolution computer or workstations. The buffering capability of the module enables the incoming signal to be sent to a remote destination. Inputs are 75Σ terminated.

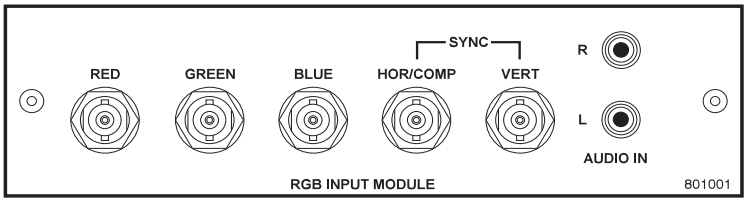

RGB400BA Features

- ◊ Accepts 3, 4, or 5 wire RGB video (sync-on-green, composite sync, or separate horizontal and vertical sync)
- ◊ Accepts YPbPr, composite (on green) and Y/C (on red/blue)
- ◊ BNC connectors for RGB signal inputs
- ◊ Buffered signals to a remote destination

RGB400 Active Loop-Thru Input Module 38-804607-xx

The *RGB400 ALT Input Module* receives analog RGB input signals from computers or other RGB source devices. Video inputs are 75Σ terminated. Video outputs provide buffered loop-through to another display device.

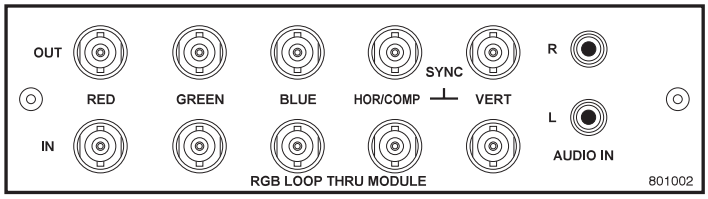

RGB400 ALT Features

- ◊ Accepts 3, 4, or 5 wire RGB video (sync-on-green, composite sync, or separate horizontal and vertical sync)
- ◊ Accepts YPbPr, composite (on green) and Y/C (on red/blue)
- ◊ BNC connectors for RGB signal inputs
- ◊ Buffered loop-through video outputs

Composite -Video Input Module 38-804608-xx

The *Composite Video Input Module* receives either composite video input signals from tape or disk players. Video inputs are 75Σ terminated. Video outputs are provided for buffered loop-through to another display device.

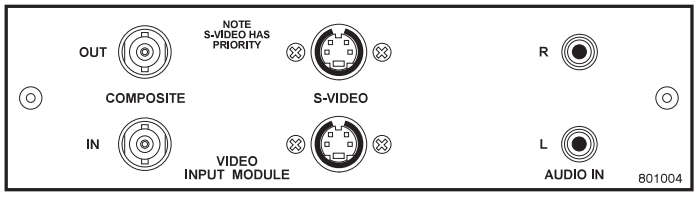

NOTES: 1) *The S-video portion of this module is non-functional with this projector. Connect composite video signals only.* ***2)*** *This module is not a decoder.*

Composite Video Features

- ◊ BNC connectors for composite RGB signals
- ◊ 4-pin mini-DIN connectors for S-Video signals *(NOTE: non-functional)*
- ◊ Buffered loop-through video outputs

PC250 Analog Input Module 38-804609-xx

The *PC250 Analog Input Module* receives analog RGB input signals from IBM PC compatibles or Macintosh computers. Video inputs are 75Σ terminated. Video outputs are provided for buffered loop-through to another display device.

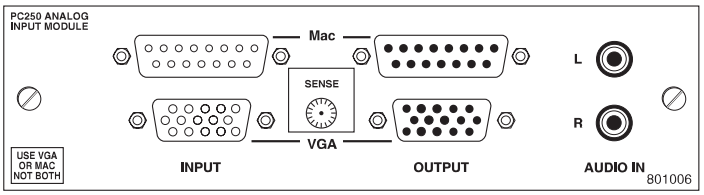

PC250 Analog Features

- ◊ Accepts VGA or MAC RGB video
- ◊ 15 pin D connectors for video
- ◊ Active loop-through video outputs

NOTES: *This interface does not accept VGA and MAC signals simultaneously.*

DVI Input Module 38-804635-xx

The *DVI Input Module* can be installed to display digital video input signals conforming to the DVI (Digital Visual Interface) single-channel standard.

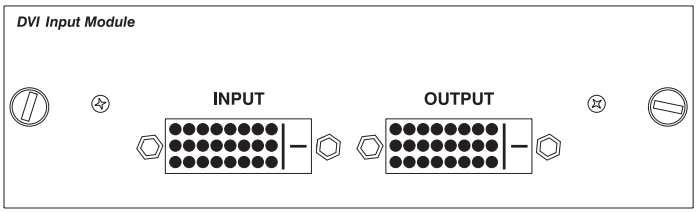

Features

- ◊ Supports Digital Visual Interface (DVI) single-channel
- ◊ Supports VESA® Extended Display Identification Data (EDID™)
- ◊ Provides an active-loop-through using a DVI connector (conforming to the DVI Specification)

Serial Digital Input Module 38-804602-xx

The Serial Digital Input Module (SDI) accepts a serial digital 4:2:2 component video signal (YCbCr) via a single **SERIAL IN** BNC connector. The signal can loop through the **SERIAL OUT** BNC out to another device (such as another projector). Inputs are 75Σ terminated.

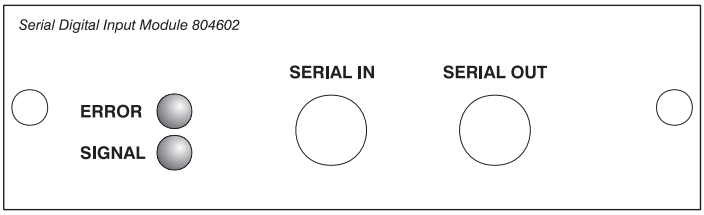

SDI Features

- ◊ Accepts serial digital 4:2:2 component video (YCbCr)
- ◊ Provides both a **SERIAL IN** and a **SERIAL OUT** BNC connector
- ◊ Includes status LEDs for signal and error
- ◊ SMPTE 259M compatible

Index

3

3D Stereo Sync Delay, 3-36
3D Stereo Sync Locking, 3-35
3D Stereo Sync Select, 3-36

A

AC Line Cord, 3-3
AC Power
  Requirements, 2-1, 2-27, 6-5
Active Input Window, 3-25
Adjusting Input Levels, 3-32
Advanced Image Settings Submenu, 3-33
Advanced Size and Position submenu, 3-25
Alignment Procedure, 2-10
Anamorphic, 3-24
Arrow Keys, 3-11
Aspect Ratio, 2-14.
Auto Color Enable, 3-31
Auto Input Level, 3-31
Auto Key, 3-7
Auto Setup, 2-2, 3-7, 3-22
AutoSource Checkbox, 3-21

B

Backlight, 3-43
Backlight Key, 3-12
Baud Rate, 2-25, 3-39
Blacklevels and Drives, 3-31
Blanking, 3-25
  PIP, 3-25
Brightness, 6-1
Brightness Key, 3-9, 3-27
Brightness Uniformity
  Canceling, 3-64
  Definition, 3-61
  Prerequisites, 3-61
  Procedure, 3-61
  Submenu, 3-44
Brightness Uniformity Menu, 3-63
Broadcast Key, 3-42
Broadcasting, 3-11
Bubble Xenon Lamp. *See* Lamp

C

Channel
  Copy/Delete, 3-19
  Locked, 3-21
  Number, 3-17
  Selection, 3-18
  Signal Type, 3-18
  Using, 3-18
Channel Key, 3-7, 3-17
Channel List Display, 3-38
Channel Setup Menu, 3-18
  Enter Key, 3-19
  Function Key, 3-19
Channels
  Creating Automatically, 3-17
  Creating in Channel Setup Menu, 3-19, 3-20
  Definition of, 3-17
  Deleting in Channel Setup Menu, 3-19
  Edit Menu, 3-20
  Name, 3-20
  Number, 3-20
Checkbox Toggles, 3-14
ChristieNet, 3-70
Clamp Location, 3-31
Clamp Tip, 3-31, 3-32
Codes, System Error, 3-73
Color Adjustment, 3-34, 3-45
  Brightness Uniformity, 3-61
  Color Saturation, 3-61
  Color Saturation Submenu, 3-47
  Preliminary Calibration, 3-58
  Procedure, 3-59
  XY Submenu, 3-46
Color Artifacts, 3-35
Color Enable, 3-32, 3-48
Color Matching, 3-58
Color Space
  Selecting, 3-28
Color Temperature, 3-34
Colors and Gray Scale, 6-1
Communications
  Connecting, 2-21
  Ethernet, 2-22
  GPIO Port, 2-23
  RS-232 Serial, 2-21
  RS-422 Serial, 2-21

Submenu, 3-39
Component Video, 2-19
Components, 1-2
Location and Use, 3-1
Composite Video, 2-20
Configuration Menu, 3-37
Contrast, 3-26
Contrast Key, 3-9
Cross Talk, 3-35
Custom Sizing, 3-22

D

Dark Interval, 3-35
Date and Time
Setting, 3-38
Decoder AGC
Enabling, 3-28
Decoder Luma Delay, 3-30
Define Custom Color Gamuts, 3-45
Detail
Image Sharpness, 3-28
Detail Threshold, 3-37
Diagnostics and Calibration, Submenu, 3-48
Display
Channel List, 3-38
Error Messages, 3-39
Slidebars, 3-38
DMD, 3-65
Dual SD/HD-SDI Input Module, 2-20

E

Edge Blending, 3-45
Description, 3-65
How Blends are Used, 3-65
Main Functions, 3-66
Procedure, 3-67
Submenu, 3-45
Enter Key, 3-11
Error Code Window, 3-3
Error Codes, System, 3-73
Error Messages, 3-71
Bad Sync, 3-71
H-Sync or V-Sync, 3-72
Invalid User Entry, 3-71
No Signal, 3-71
System Warnings/Errors, 3-72
Ethernet, 6-4. *See* Communications
Control of TPC, 3-70
Troubleshooting, 5-4
Ethernet Network, 2-25
Ethernet Settings Submenu, 3-41
Exit Key, 3-11

F

Film Mode Threshold, 3-37
Filter
Replacement Schedule, 4-2
Filter (Image Adjustment), 3-27
Flying Projector. *See* Projector, Hoisting
Focus, 2-3, 2-29, 3-2
Folded Optics, 2-18
Font Size, Menu, 3-38
Foreign Objects, Dangers of, 4-3
Frame Delay and Monitor, 3-35
Freeze Image, 3-48
Full Height, 3-23
Full Screen, 3-23
Full Width, 3-23
Function Key, 3-10

G

Gamma, 3-27
Gamma Key, 3-9
Gamma, Description of, 3-9
Geometry and Color, Submenu, 3-44
Glossary of Terms, 1
GPIO, 2-23, 6-4

H

Handles, 3-2
Safety of, 2-3
Help
Context-sensitive, 3-12
From presentation level, 3-13
Hoisting
Hardware:, 2-4
Procedure, 2-5
Horizontal Offset, 2-16
Adjusting, 3-2
Horizontal Position, 3-25

I

Image
Adjustments, 3-21
Gamma, 3-27
Orientation, 2-28
Image Orientation, 3-38
Image Settings Menu, 3-26
Infrared Sensors, 3-4
InMenu Checkbox, 3-21
Input
Definition of, 3-16
Selecting/Switching, 3-16
Settings, Advanced, 3-33
Input Key, 3-8
Input Keys, 3-7
Input Level, Auto, 3-31
Input Levels Submenu, 3-30
Input Panel, 3-3
Input Saturation Color Level, 3-29
Input Tint, 3-30
Input Video Black, 3-29
Inputs, 2-18, 6-3
Dual SD/HD-SDI, 6-3
DVI-I, 6-3
Number and Type, 6-2
Optional, 2-20
Inputs, Analog
RGB/YPbPr, 6-2
Sync, 6-3
Video, 6-3
Installation

Ambient Lighting, 2-14
Ceiling Mounting, 2-17
Front Screen, 2-13
Horizontal Position, 2-16
Other Considerations, 2-14
Rear Screen, 2-13
Screen Size, 2-13
ScreenAspect Ratio, 2-14
Type, 2-12
Vertical Position, 2-15
Intensity Setting for Lamp, 3-56
Invalid Channel, 3-71
Invalid User Entry. *See* Error Messages
IP Address, 3-41
Setting, 2-25
IR Sensors, 3-43

K

Keypad
Accessing Menus, 3-12
Built-in, 2-29, 3-4
Conversion, 2-30
Enabling Wire Remote, 3-44
Guide lines, 3-7
IR Remote, 2-21, 3-5, 6-4
Remapping, 3-54
Replacing Batteries, 4-5
Types, 3-4
Wired Remote, 3-4, 3-6, 6-4
Keystone, 2-15, 2-28
Correcting, 3-44

L

Labels and Markings, 4-1
Lamp
Cool Down, 4-3
Failure to Ignite, 5-3
History, 3-57
Hours, 3-54, 4-6
Hours, 3-57
Limit, 3-55, 3-58, 4-2
Maintaining Brightness, 3-56
Mainting Brightness, 3-61
Menu, 3-54
Message, 3-55
Replacement Procedure, 4-6
Replacement Schedule. *See* Lamp Limit
Serial Number, 3-54, 3-57
Set Power, 3-62
Specs, 6-6
Troubleshooting, 5-3
Lamp Modes, 3-55
Intensity, 3-55
Max Brightness, 3-55
Power, 3-55
Language
Select, 3-37
Laser Key, 3-12
LCD Status Display Window, 3-4
LED, Status Codes, 3-72
Lens
Adjustments, 2-3
List & Specifications, 6-2
Offset, 3-2
Replacement Procedure, 4-11
Lens Focus Keys, 3-11
Lens Release, 3-1
Level Value, 3-50
Leveling, 2-28
Lifting Projector, 2-3
Line Cord, AC, 3-3
LiteLOC
Troubleshooting, 5-3
LiteLOC Calibration, 3-50
Locked Channel Checkbox, 3-21
Logo Replacement, 3-39
Luma Delay, 3-30
Lumens. *See* Brightness

M

Menu, 3-12
Channel Setup, 3-18
Color Saturation, 3-61
Configuration, 3-37
Image Settings, 3-26
Lamp, 3-54
PIP and Switching, 3-52
Simulation 3D, 3-35
Size and Position, 3-22
Status, 3-58
Test Pattern, 3-44
White Uniformity, 3-63
Menu Font Size, 3-38
Menu Key, 3-9
Menu Location on Screen, 3-38
Menu Navigation, 3-12, 3-21
Menu Preferences Submenu, 3-38
Mixed Networks, 2-24
Motion Filter, 3-36
Multiple Projectors
Connecting, 2-24
Description, 3-58

N

Network Routing, 3-40
Network, Split. See Split Network
No Resizing, 3-23
No Signal, 3-71
Noise Reduction, 3-28
Non-operating Environment, 6-6
Numerical Entry, 3-16

O

Odd Pixel Adjustment, 3-49
Level Detector, 3-50
Offset
Horizontal, 2-16
Vertical, 2-16
On-Line Help. *See* Help
Operating Environment, 6-6
Optical Aperture, 3-34
Option, 3-51
Optional Inputs, 2-20

OSD Key, 3-9

P

Panel
  Input, 3-3
Peak Detector, 3-32, 3-49
PIP, 3-51
  Aspect Ratio Presets, 3-53
  Blanking, 3-25
  Border Color, 3-53
  Border Width, 3-53
  Compatible Signals, 3-51
  Enable, 3-52
  Image Settings. *See* Image Settings Menu
  Position Presets, 3-53
  Primary Image, 3-51
  Secondary Image, 3-51
  Size and Position Submenu, 3-53
  Swap Main and PIP Image, 3-52
PIP Key, 3-10
Pixel Phase, 3-24
Pixel Tracking, 3-24
Plug & Display (EDID), 3-26
Port Number
  Changing, 2-26
  Entering, 3-41
Power, 2-1
  Setting for Lamp, 3-56
Power Cords and Attachments, Safety, 4-2
Power Key, 3-7
Power Requirements. *See* AC Power
Power-up
  Auto, 3-38
Presets, Resizing, 3-22
Primary Colors, Adjusting, 3-58
Primary Image, 3-51
Projector
  Assigning/Changing Number, 3-39
  Components, 1-2, 3-1, 6-7
  Dimensions, 6-7
  Hoisting, 2-5
  Number, 3-16
  Position and Mounting, 2-28
  Resetting, 3-72
  Safe Location of, 4-1
Projector Features, 1-1
Projector Key, 3-11
Projector Set Up
  Quick, 2-1
Pull-Down Lists, Use of, 3-14
Purchase Record, 1-3

Q

Quick Set Up, 2-1

R

Remote Keypads
  Jumper Settings, 2-31
Resizing, 3-22
  Default, 3-22
Resolution, 6-1
RGB
  Connection, 3-3
  Sources, 2-18
Rigging Hardware, Attaching, 2-6
RS-232
  Network, 2-24
  Serial Communications, 2-21
  Serial Interface, 3-3
  Specifications, 6-4
RS-422
  Interface, 3-3
  Serial Communications, 2-21
  Specifications, 6-4

S

Safety Cables, 2-6
Screen
  Diffused, 2-13
  Optical, 2-13
  Size, 2-13, 2-14
Seamless Switching, 3-53
  Compatible Signals, 3-51
  Definition, 3-53
  Fade Time, 3-54
  Image Optimization, 3-52
Secondary Image, 3-51
Servicing
  Conditions Requiring Servicing, 4-3
Setting RGB Levels, 3-30
Shutter, 3-2
Shutter Key, 3-10
Simulation 3D Menu, 3-35
Size, 3-24
Size and Position Menu, 3-22
Slidebars
  ”Direct”, 3-14, 3-21
  Adjustment, 3-13
  Using, 3-14
Source Selection, 2-2
Source Setup. *See* Channel
Splash Screen Setup, 3-39
Split Network, 3-40
Split Networks
  Options for Setup, 2-26
Stacking, 2-6
  Leg Nuts, 2-8
  Legs, 2-8
  Mounts, 2-6
  Procedure, 2-6
  Safety Pins, 2-9
Status Codes, LED, 3-72
Status LED, 3-3
Status Menu, 3-58
S-Video, 2-20
Swap Key, 3-10
Switch/Breaker, 3-3
Switcher, 3-21
Sync
  Def. and types, 6
System Error Codes, 3-73
System Warning Message, 3-72

T

Test Key, 3-7
Test Pattern, 3-44
Test Pattern Grey Level, 3-48
Text Editing, 3-15
  Characters, 3-15
  Navigation, 3-15
  Numerical Values, 3-16
Throw Distance, 2-1, 2-15
  Definition, 2-15
Time-outs, 3-13
Troubleshooting
  Ethernet, 5-4
  Lamp, 5-3
  Power, 5-1

V

Ventilation, Importance of, 4-3
Vertical Offset
  Adjusting, 3-2
Vertical Position, 2-15, 3-25
Vertical Stretch, 3-24
Video, 3-3
Video Options, 3-28
Video Standards, 3-29
Voltmeter, 3-3

W

Warnings, 4-1
White Uniformity Menu, 3-63, 3-64
White Uniformity Slidebars, 3-62

Y

YPbPr, 3-28
  Connecting, 2-19

Z

Zoom, 2-3, 3-1
Zoom Keys, 3-11