myprojectorlamps.com

The most trusted, dependable name in projector lamp sales.

http://www.myprojectorlamps.com

http://www.myprojectorlamps.ca

http://www.myprojectorlamps.eu

The following projector manual has not been modified or altered in any way.

CHRISTIE

RoadRunner LX100

MODEL 38-VIV402-01

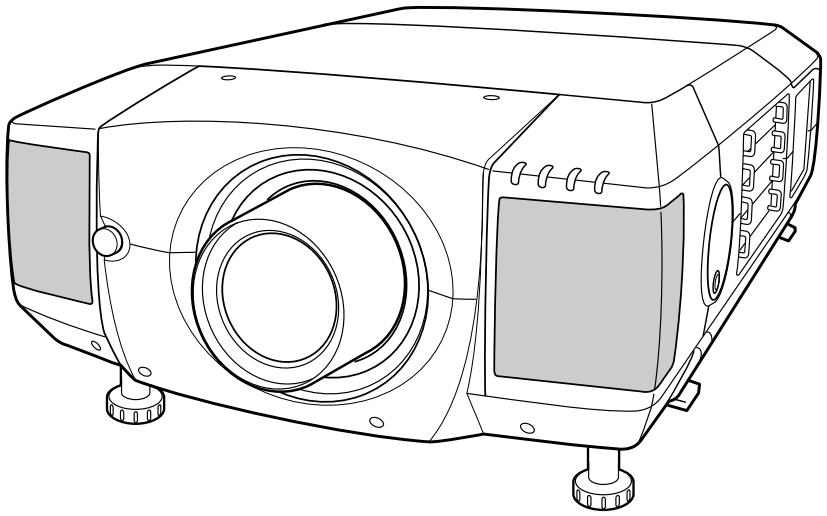

✻ Projection lens is optional.

User's Manual

TO THE OWNER

Before operating this projector, read this manual thoroughly and operate the projector properly.
This projector provides many convenient features and functions. Operating the projector properly enables you to manage those features and maintains it in better condition for a considerable time.
Improper operation may result in not only shortening the product-life, but also malfunctions, fire hazard, or other accidents.
If your projector seems to operate improperly, read this manual again, check operations and cable connections and try the solutions in the “Trouble-shooting” section of the end of this booklet. If the problem still persists, contact the sales dealer where you purchased the projector or the service center.

⚠ SAFETY PRECAUTIONS

WARNING : TO REDUCE THE RISK OF FIRE OR ELECTRIC SHOCK, DO NOT EXPOSE THIS APPLIANCE TO RAIN OR MOISTURE.

- This projector produces intense light from the projection lens. Do not stare directly into the lens. Eye damage could result. Be especially careful that children do not stare directly into the beam.
- This projector should be set in the way indicated. If not, it may result in a fire hazard.
- Take appropriate space on the top, sides and rear of the projector cabinet for allowing air circulation and cooling the projector. Minimum distance should be taken. If the projector is to be built into a compartment or similarly enclosed, the minimum distances must be maintained. Do not cover the ventilation slot on the projector. Heat build-up can reduce the service life of your projector, and can also be dangerous.

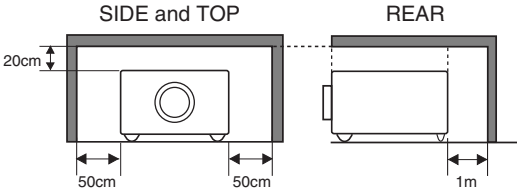

- Do not put any flammable object or spray can near the projector, hot air is exhausted from the ventilation holes.
- Remote Control Unit, supplied to this projector, emits the laser beam as the laser pointer function from Laser Light Window while pressing LASER button (for 1 minute / LASER POINTER INDICATOR lights red to indicate laser emission). Do not look into Laser Light Window or shine the laser beam on yourself or other people. Eye damage may result.
- If the projector is not to be used for an extended time, unplug the projector from the power outlet.

READ AND KEEP THIS USER'S MANUAL FOR LATER USE.

CAUTION
RISK OF ELECTRIC SHOCK
DO NOT OPEN

CAUTION : TO REDUCE THE RISK OF ELECTRIC SHOCK, DO NOT REMOVE COVER (OR BACK). NO USER-SERVICEABLE PARTS INSIDE EXCEPT LAMP REPLACEMENT. REFER SERVICING TO QUALIFIED SERVICE PERSONNEL.

THIS SYMBOL INDICATES THAT DANGEROUS VOLTAGE CONSTITUTING A RISK OF ELECTRIC SHOCK IS PRESENT WITHIN THIS UNIT.	THIS SYMBOL INDICATES THAT THERE ARE IMPORTANT OPERATING AND MAINTENANCE INSTRUCTIONS IN THE USER'S MANUAL WITH THIS UNIT.

SAFETY INSTRUCTIONS

All the safety and operating instructions should be read before the product is operated.

Read all of the instructions given here and retain them for later use. Unplug this projector from AC power supply before cleaning. Do not use liquid or aerosol cleaners. Use a damp cloth for cleaning.

Follow all warnings and instructions marked on the projector.

For added protection to the projector during a lightning storm, or when it is left unattended and unused for long periods of time, unplug it from the wall outlet. This will prevent damage due to lightning and power line surges.

Do not expose this unit to rain or use near water... for example, in a wet basement, near a swimming pool, etc...

Do not use attachments not recommended by the manufacturer as they may cause hazards.

Do not place this projector on an unstable cart, stand, or table. The projector may fall, causing serious injury to a child or adult, and serious damage to the projector. Use only with a cart or stand recommended by the manufacturer, or sold with the projector. Wall or shelf mounting should follow the manufacturer's instructions, and should use a mounting kit approved by the manufacturers.

An appliance and cart combination should be moved with care. Quick stops, excessive force, and uneven surfaces may cause the appliance and cart combination to overturn.

Slots and openings in the back and bottom of the cabinet are provided for ventilation, to insure reliable operation of the equipment and to protect it from overheating.

The openings should never be covered with cloth or other materials, and the bottom opening should not be blocked by placing the projector on a bed, sofa, rug, or other similar surface. This projector should never be placed near or over a radiator or heat register.

This projector should not be placed in a built-in installation such as a book case unless proper ventilation is provided.

Never push objects of any kind into this projector through cabinet slots as they may touch dangerous voltage points or short out parts that could result in a fire or electric shock. Never spill liquid of any kind on the projector.

This projector should be operated only from the type of power source indicated on the marking label. If you are not sure of the type of power supplied, consult your authorized dealer or local power company.

Do not overload wall outlets and extension cords as this can result in fire or electric shock. Do not allow anything to rest on the power cord. Do not locate this projector where the cord may be damaged by persons walking on it.

Do not attempt to service this projector yourself as opening or removing covers may expose you to dangerous voltage or other hazards. Refer all servicing to qualified service personnel.

Unplug this projector from wall outlet and refer servicing to qualified service personnel under the following conditions:

a. When the power cord or plug is damaged or frayed.
b. If liquid has been spilled into the projector.
c. If the projector has been exposed to rain or water.
d. If the projector does not operate normally by following the operating instructions. Adjust only those controls that are covered by the operating instructions as improper adjustment of other controls may result in damage and will often require extensive work by a qualified technician to restore the projector to normal operation.
e. If the projector has been dropped or the cabinet has been damaged.
f. When the projector exhibits a distinct change in performance-this indicates a need for service.

When replacement parts are required, be sure the service technician has used replacement parts specified by the manufacturer that have the same characteristics as the original part. Unauthorized substitutions may result in fire, electric shock, or injury to persons.

Upon completion of any service or repairs to this projector, ask the service technician to perform routine safety checks to determine that the projector is in safe operating condition.

Voor de klanten in Nederland

Bij dit product zijn batterijen geleverd.
Wanneer deze leeg zijn, moet u ze niet weggooien maar inleveren als KCA.

COMPLIANCES

Federal Communication Commission Notice

This equipment has been tested and found to comply with the limits for a Class A digital device, pursuant to Part 15 of FCC Rules. These limits are designed to provide reasonable protection against harmful interference when the equipment is operated in a commercial environment. This equipment generates, uses, and can radiate radio frequency energy and, if not installed and used in accordance with the instruction manual, may cause harmful interference to radio communications. Operation of this equipment in a residential area is likely to cause harmful interference in which case the user will be required to correct the interference at his own expense.

Do not make any changes or modifications to the equipment unless otherwise specified in the instructions. If such changes or modifications should be made, you could be required to stop operation of the equipment.

CAUTION!

This is a Class A equipment. This equipment can cause interference in residential areas; in this case, the operator can be asked to take adequate countermeasures.

AC POWER CORD REQUIREMENT

The AC Power Cord supplied with this projector meets the requirement for use in the country you purchased it.

AC Power Cord for the United States and Canada :

AC Power Cord used in the United States and Canada is listed by the Underwriters Laboratories (UL) and certified by the Canadian Standard Association (CSA).
AC Power Cord has a grounding-type AC line plug. This is a safety feature to be sure that the plug will fit into the power outlet. Do not try to defeat this safety feature. Should you be unable to insert the plug into the outlet, contact your electrician.

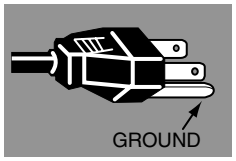

THE SOCKET-OUTLET SHOULD BE INSTALLED NEAR THE EQUIPMENT AND EASILY ACCESSIBLE.

TABLE OF CONTENTS

FEATURES AND DESIGN 6

PREPARATION 7

NAME OF EACH PART OF PROJECTOR 7
SETTING-UP PROJECTOR 8
- CONNECTING AC POWER CORD 8
- LENS INSTALLATION 9
- POSITIONING PROJECTOR 9
- LENS SHIFT ADJUSTMENT 9
- PICTURE LEVEL AND TILT ADJUSTMENT 10
- MOVING PROJECTOR 10

CONNECTING PROJECTOR 11

TERMINALS OF PROJECTOR 11
CONNECTING TO COMPUTER 14
CONNECTING TO VIDEO EQUIPMENT 15

BEFORE OPERATION 16

SIDE CONTROLS AND INDICATORS 16
OPERATION OF REMOTE CONTROL 18
- LASER POINTER FUNCTION 18
- REMOTE CONTROL BATTERIES INSTALLATION 19

OPERATING ON-SCREEN MENU 20
- HOW TO OPERATE ON-SCREEN MENU 20
- FLOW OF ON-SCREEN MENU OPERATION 20
- MENU BAR 21

BASIC OPERATION 22

TURNING ON / OFF PROJECTOR 22
ADJUSTING SCREEN 23
- ZOOM ADJUSTMENT 23
- FOCUS ADJUSTMENT 23
- LENS SHIFT ADJUSTMENT 23
- KEYSTONE ADJUSTMENT 23
- PICTURE FREEZE FUNCTION 24
- NO SHOW FUNCTION 24
- P-TIMER FUNCTION 24

SOUND ADJUSTMENT 25

COMPUTER MODE 26

SELECTING INPUT SOURCE 26
SELECTING COMPUTER SYSTEM 26
- COMPATIBLE COMPUTER SPECIFICATIONS 28

PC ADJUSTMENT 29
- AUTO PC ADJUSTMENT 29
- MANUAL PC ADJUSTMENT 30

PICTURE IMAGE ADJUSTMENT 32
- IMAGE LEVEL SELECT 32
- IMAGE LEVEL ADJUSTMENT 33

PICTURE SCREEN ADJUSTMENT 34

VIDEO MODE 35

SELECTING INPUT SOURCE 35
SELECTING VIDEO SYSTEM 36
PICTURE IMAGE ADJUSTMENT 37
- IMAGE LEVEL SELECT 37
- IMAGE LEVEL ADJUSTMENT 38

PICTURE SCREEN ADJUSTMENT 39

SETTING 40

SETTING MENU 40

APPENDIX 43

OPERATING WIRELESS MOUSE 43
MAINTENANCE 43
- WARNING TEMP. INDICATOR 43
- AIR FILTER CARE AND CLEANING 44
- CLEANING PROJECTION LENS 44
- LAMP MANAGEMENT 45
- LAMP REPLACEMENT 46

TROUBLESHOOTING 48
TECHNICAL SPECIFICATIONS 50

TRADEMARKS
- Apple, Macintosh, and PowerBook are trademarks or registered trademarks of Apple Computer,Inc.
- IBM and PS/2 are trademarks or registered trademarks of International Business Machines, Inc.
- Windows and PowerPoint are registered trademarks of Microsoft Corporation.
- Each name of corporations or products in the user's manual is a trademark or a registered trademark of its respective corporation.

FEATURES AND DESIGN

This Multimedia Projector is designed with most advanced technology for portability, durability, and ease of use. This projector utilizes built-in multimedia features, a palette of 16.77 million colors, and matrix liquid crystal display (LCD) technology.

◆ Compatibility

This projector widely accepts various video and computer input signals including;

- **Computers**
  IBM-compatible or Macintosh computer up to 1600 x 1200 resolution.
- **6 Color Systems**
  NTSC, PAL, SECAM, NTSC 4.43, PAL-M or PAL-N color system can be connected.
- **Component Video**
  Component video signal, such as a DVD player output high definition TV signals including 480i, 480p, 575i, 575p, 720p, 1035i, 1080i-50 or 1080i-60, can be connected.
- **S-Video**
  S-Video signal, such as a S-VHS VCR output signal, can be connected.

◆ High Resolution Image

This projector provides 1024 x 768 dots resolution for computer input and 800 horizontal TV lines. Resolution from a computer between XGA (1024 x 768) and UXGA (1600 x 1200) is compressed into 1024 x 768 dots. This projector can not display image of over 1600 x 1200 dots. When resolution of your computer is more than 1600 x 1200, reset a computer output for lower resolution.

◆ Multi-Scan System

This projector has Multi-Scan System to conform to almost all computer output signals quickly. There is no need for troublesome manual adjustment of frequency and other settings.

◆ One-Touch Auto PC Adjustment

Incoming computer video signals are recognized and best adjustment is automatically set by Auto PC Adjustment. No complicated setup is necessary and projection is always precise.

◆ Progressive Scan Function

This function converts interlace video signals into progressive scan signals and provide fine picture quality.

◆ Digital Zoom (for Computer)

Digital Zoom function adjusts image size to approx. 1/4 ~ 49 times of original image size, allowing you to focus on crucial information at a presentation.

◆ Keystone Correction

Positioning height of a projector may result in distorted image being displayed in a trapezoid shape. Keystone Correction solves this problem by digitally altering projection to produce undistorted images.

◆ Motor-driven Lens Shift

Projection lens can be moved up, down left and right with motor-driven lens shift function. This function makes it easy to provide projected image where you want.
Zoom and focus can be also adjusted with motor-driven operation.

◆ Power Management

Power Management function is provided to reduce power consumption while a projector is not in use.
This Power Management function operates to turn Projection Lamp off when a projector detects signal interruption and any button is not pressed over 5 minutes. Projection Lamp is automatically turned on again when a projector detects signal or any operation button is pressed.
This projector is shipped with this function ON.

◆ Digital Visual Interface

This projector is equipped with DVI 29-pin terminal for connecting DVI output from a computer.

◆ Multi Versatile Platform

This projector applies various input/output terminals and 4 terminal slots for expansion to tune to diversity of signals from computers and video equipment.

◆ Selectable Terminal Slots

4-built-in Terminal Slots enable you to arrange any combinations of input sources just by changing Terminal Boards. For Terminal Boards, contact sales dealer where you purchased a projector.

◆ Laser Pointer Function

Remote Control Unit supplied with this projector includes Laser Pointer function. This function helps you to make a smart presentation on a projected screen.

◆ Wireless Mouse

Remote Control Unit supplied with this projector has Wireless Mouse function for a connected computer. This function enables you to operate both projector and computer with Remote Control Unit only.

◆ Multilanguage Menu Display

Operation menu is displayed in; English, German, French, Italian, Spanish, Portuguese, Dutch, Swedish, Chinese, Korean or Japanese.

◆ Network board (Optional)

Network board is an optional product to control and set up a projector via the network cable. By accessing to the connected projector using the web browser on your computer. It can be controlled and set up the projector remotely. Contact the sales dealer where you purchased this projector for optional parts.

NAME OF EACH PART OF PROJECTOR

FRONT OF CABINET

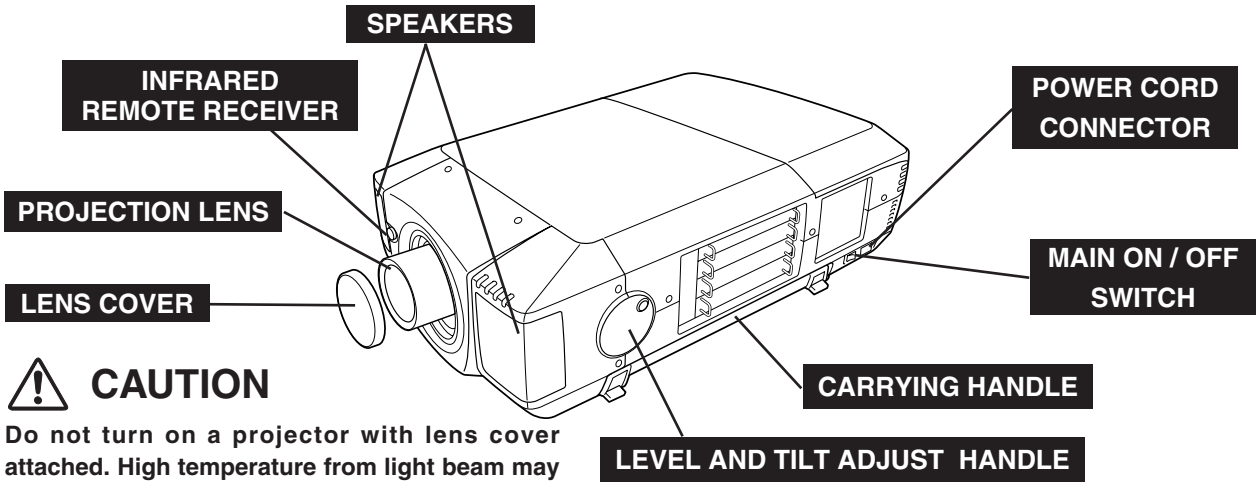

⚠ CAUTION

Do not turn on a projector with lens cover attached. High temperature from light beam may damage lens cover and result in fire hazard.

BACK OF CABINET

EXHAUST VENT

⚠ HOT AIR EXHAUSTED !

Air blown from exhaust vent is hot. When using or installing a projector, following precautions should be taken.

- Do not put a flammable object near this vent.
- Keep rear grills at least 3' (1m) away from any object, especially heat-sensitive object.
- Do not touch this area, especially screws and metallic parts. This area will become hot while a projector is used.

This projector detects internal temperature and automatically controls operating power of Cooling Fans.

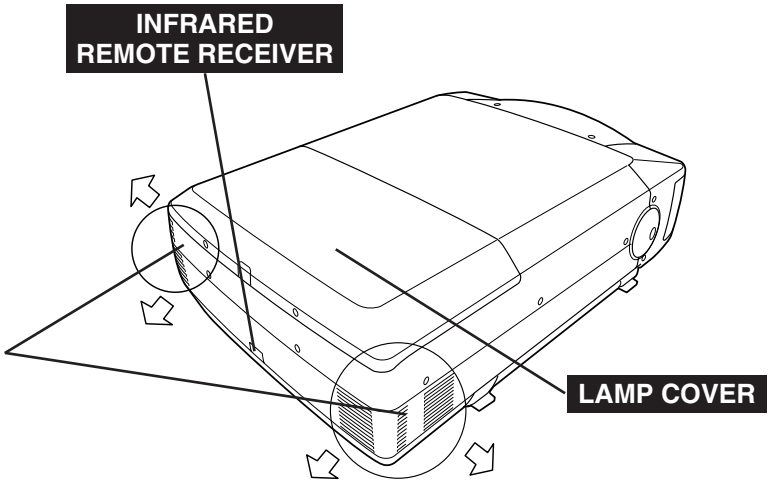

BOTTOM OF CABINET

AIR INTAKE VENTS

This projector is equipped with cooling fans for protection from overheating. Pay attention to following to ensure proper ventilation and avoid a possible risk of fire and malfunction.

- Do not cover vent slots.
- Keep bottom clear of any objects. Obstructions may block cooling air.

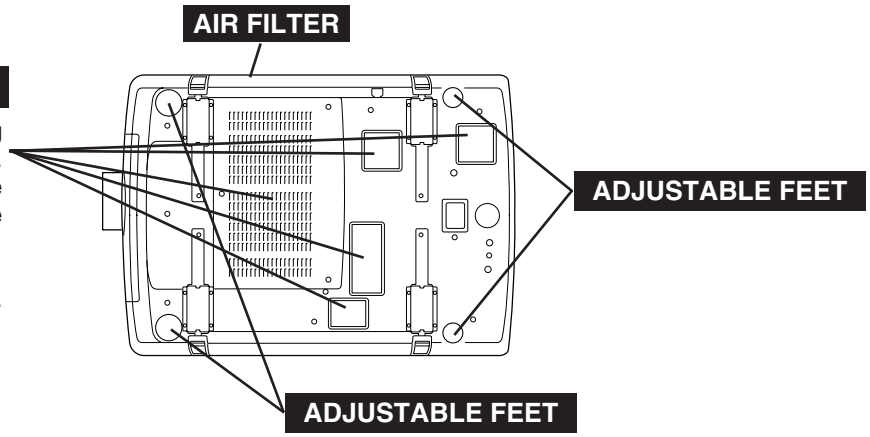

SETTING-UP PROJECTOR

CONNECTING AC POWER CORD

This projector uses nominal input voltages of 120 V or 200-240 V AC. This projector automatically selects correct input voltage. It is designed to work with single-phase power systems having a grounded neutral conductor. To reduce risk of electrical shock, do not plug into any other type of power system.
Consult your authorized dealer or service station if you are not sure of type of power supply being in use.
Connect a projector with peripheral equipment before turning a projector on. (Refer to pages 12 ~ 15 for connection.)

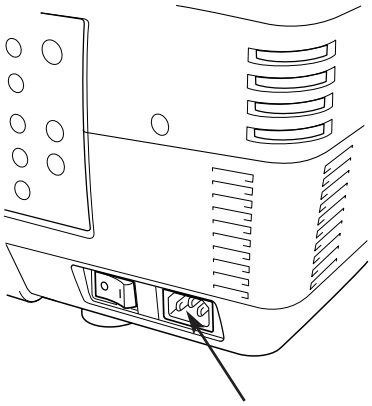

Connect AC Power Cord (supplied) to a projector.
AC outlet must be near this equipment and must be easily accessible.

CAUTION

AC Power Cord must meet requirement of country where you use a projector.
Confirm AC plug type with chart below and proper AC power cord must be used.
If supplied AC Power Cord does not match AC outlet, contact your sales dealer.

Projector side	AC Outlet side	
	For U.S.A. and Canada	**For Continental Europe**
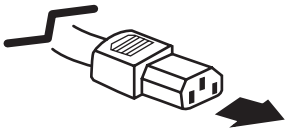 To POWER CORD CONNECTOR on a projector.	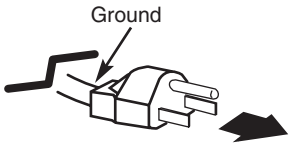 To AC Outlet. **(120 V AC)**	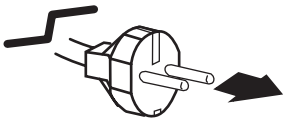 To AC Outlet. **(200 - 240 V AC)**

LENS INSTALLATION

Before setting up a projector, install Projection Lens on a Projector.

1. Before installation, check where a projector is used and prepare suitable lens. For specifications of Projection Lens, refer to manual separately attached or contact sales dealer where you purchased a projector.
2. For installation, refer to installation manual supplied to a Projector.

When moving or setting up a projector, be sure to replace a Lens Cover to protect a surface. And be careful not to hold or subject a lens to strong forces. It may damage lens, cabinet, or mechanical parts.

POSITIONING PROJECTOR

This projector is designed to project on a flat projection surface.

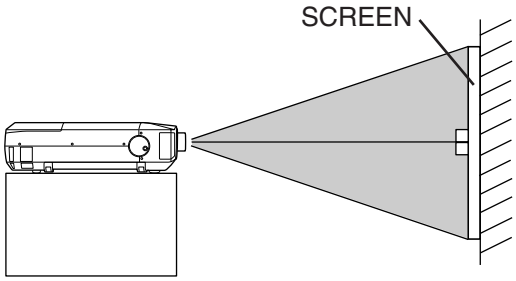

ROOM LIGHT
Brightness in room has a great influence on picture quality. It is recommended to limit ambient lighting in order to provide best image.

VENTILATION

This projector is equipped with cooling fan to protect it from over-heating. Pay attention to following to ensure proper ventilation and avoid a possible risk of fire and malfunction.

- Do not cover vents with papers or other materials.
- Keep rear grill at least 3 feet (1 m) away from any object.
- Make sure that there are no objects under a projector. An object under a projector may prevent a projector from taking cooling air through bottom vent.

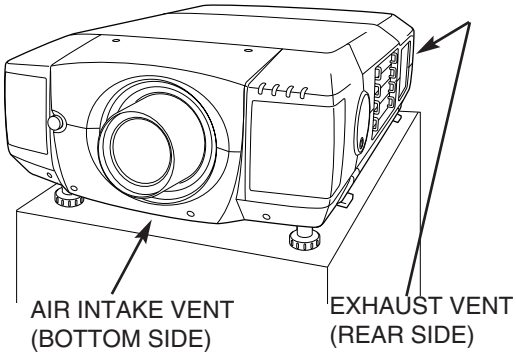

LENS SHIFT ADJUSTMENT

Projection lens can be moved up, down, left and right with motor-driven lens shift function. This function makes it easy to provide projected image where you want.

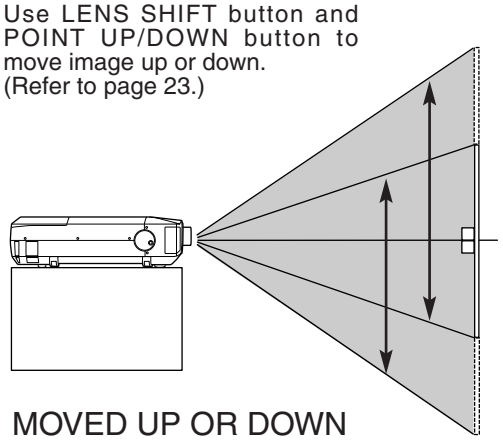

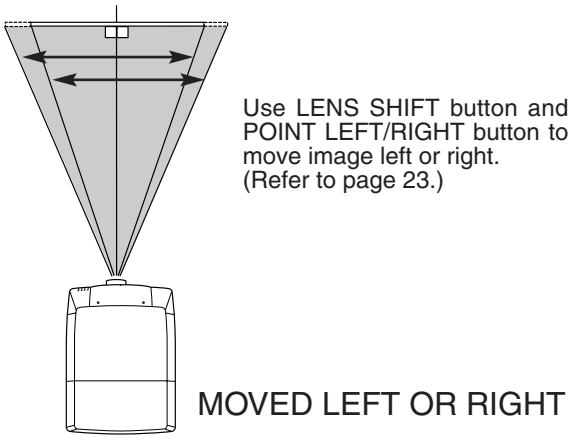

PICTURE LEVEL AND TILT ADJUSTMENT

Picture tilt and projection angle can be adjusted with handles on both sides of a projector. Projection angle can be adjusted to 5.7 degrees upper way.

1 Press knob on handle. Handle pop out.

2 Turn handles (right and left) until picture is projected on proper position. Adjust height of rear adjustable feet by rotating them until projector properly stabled on table.

3 Press knob and retract handle.

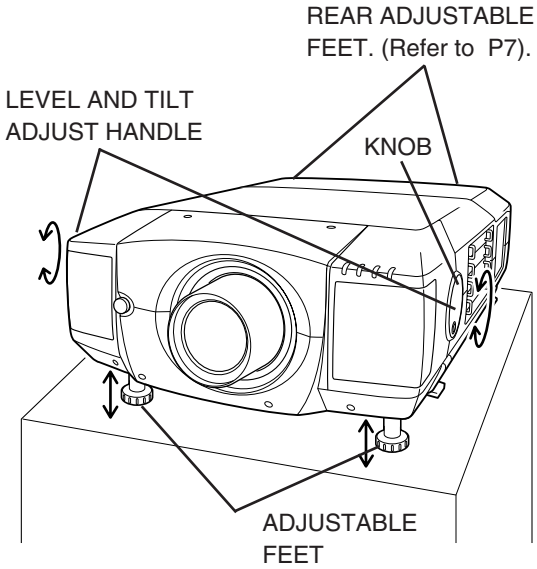

Height of front feet can be adjusted by turning handles.

MOVING PROJECTOR

For safety, be sure to hold Carrying Handles on both sides by 2 or more people when moving a projector. Moving it unproperly may result in damage of cabinet or person's injury.
Replace lens cover and retract feet to prevent damage to lens and cabinet.

1 Pull up lock buttons on each side of carrying handles and release locks.

2 Pull carrying handles out fully until it's locked (with a click). Move a projector by holding two handles by 2 or more people.

3 To retract carrying handles, pull up lock buttons and release lock of handles and press handles fully in until it's locked.

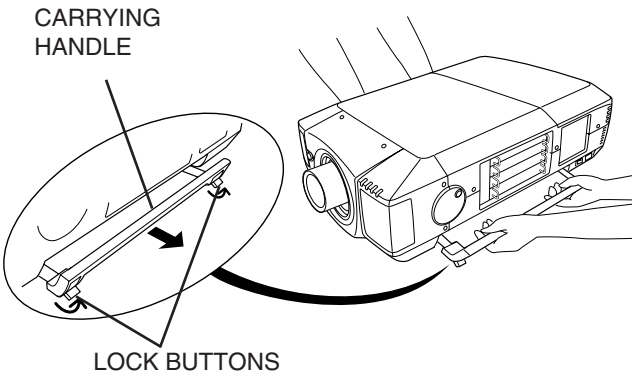

Pull up lock buttons to release lock.

CAUTION IN CARRYING OR TRANSPORTING A PROJECTOR

- Do not drop or bump a projector, otherwise damages or malfunctions may result.
- When carrying a projector, use a suitable carrying case.
- Do not transport a projector by using a courier or transport service in an unsuitable transport case. This may cause damage to a projector. To transport a projector through a courier or transport service, consult your dealer and best case should be applied.

TERMINALS OF PROJECTOR

This projector applies various input/output terminals and 4 terminal slots for expansion to tune to diversity of signals from computers and video equipment. 4-built-in Terminal Slots enable you to arrange desired combinations of input sources just by changing Terminal Boards. For Terminal Boards, contact sales dealer where you purchased a projector.

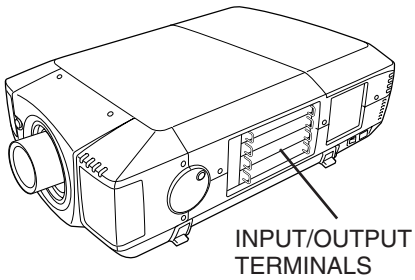

4 TERMINAL SLOTS (Factory set)

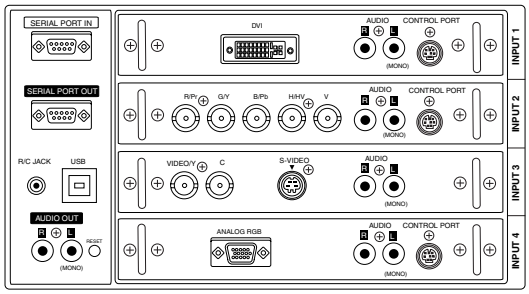

REPLACEMENT OF TERMINAL

NOTE; When replacement of terminal board, MAIN ON/OFF switch should be OFF position.

1 Remove 2 Screws on terminal.

2 Pull out terminal by holding handle.

3 Replace terminal. Insert terminal along Guide to fit Plug into Socket.

4 Tighten screws to secure terminal.

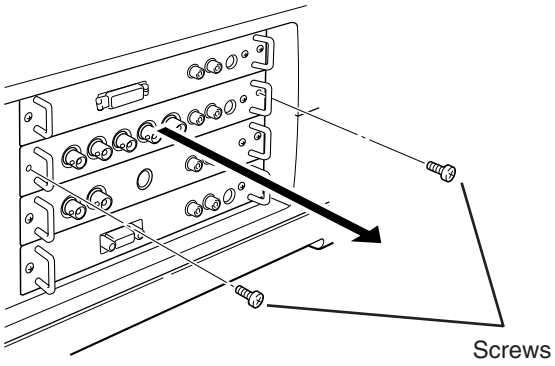

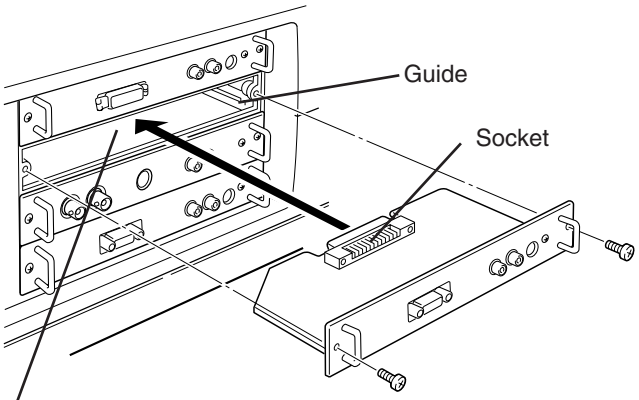

Figure shows HDB 15-PIN terminal.

NOTES ON ORDERING OR USING OPTIONAL INTERFACE BOARD

When ordering or using Optional Interface Board (Terminal Board), contact your sales dealer. When contacting the sales dealer, tell the Optional Control Number (Op.cont.No.) in the menu that is located under Language Select Menu. (See page 40.)

INPUT/OUTPUT TERMINALS AND JACKS

INPUT 2

5 BNC INPUT JACKS

Connect component video output (Cr, Y, Cb or Pr, Y, Pb) from video equipment to R/Pr, G/Y and B/Pb jacks or connect computer output [5 BNC Type (Red, Green, Blue, Horiz. Sync and Vert. Sync.)] from computer to R/Pr, G/Y, B/Pb, H/HV and V jacks. (Refer to P14, 15)

INPUT 1

DVI INPUT TERMINAL

Connect computer output (Digital/Analog DVI-I type) to this terminal. (Refer to P14.)

INPUT 1, 2, 3, 4

AUDIO INPUT JACKS

Connect audio output from computer or video equipment to these jacks. (Refer to P14, 15.)

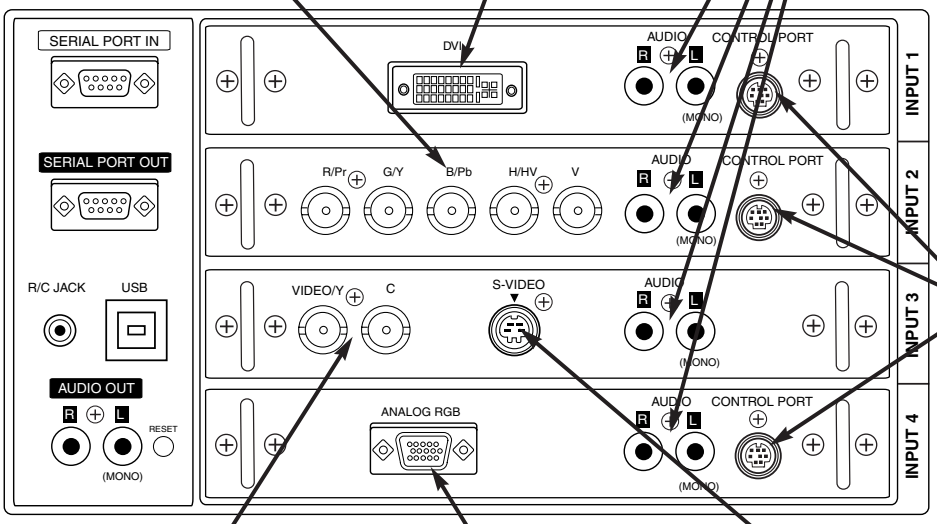

INPUT 1, 2, 4

CONTROL PORT CONNECTORS

When controlling computer with Remote Control of this projector, connect mouse port of your personal computer to these connectors. (Refer to P14.)

INPUT 3

AV INPUT (VIDEO/Y, C) JACKS

Connect composite video output from video equipment to VIDEO/Y jack or connect Separate Y/C video outputs to VIDEO/Y and C jacks. (Refer to P15.)

INPUT 4

HDB 15-PIN INPUT TERMINAL

Connect computer output (Analog HDB 15-pin type) to this terminal. (Refer to P14.)

INPUT 3

S-VIDEO INPUT JACK

Connect S-VIDEO output from video equipment to this jack. (Refer to P15.)

SERIAL PORT IN TERMINAL

If you control a projector by computer, you must connect a cable (not provided) from your computer to this terminal.

USB PORT (Series B)

This port is used to control a projector with computer. It is also used to control computer with Remote Control of this projector. (Refer to P41-43.) Connect USB port of computer to this port.

SERIAL PORT OUT TERMINAL

This terminal outputs signal from SERIAL PORT IN. More than two projectors can be controlled with one computer by connecting SERIAL PORT IN. of another projector to this terminal.

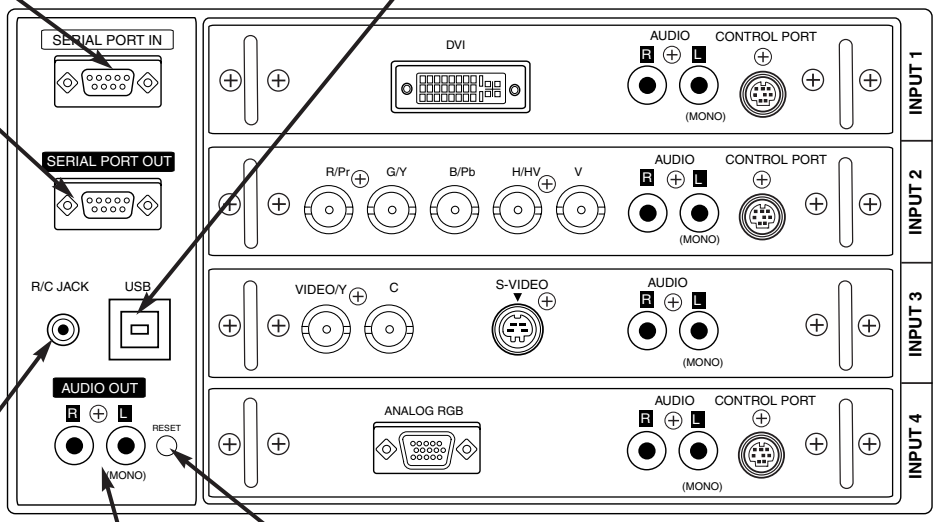

R/C JACK

When using Wired / Wireless Remote Control Unit as Wired Remote Control, Connect Wired Remote Control Unit to this jack with Remote Control Cable (supplied).
(Refer to page 19.)

RESET BUTTON

This projector uses a micro processor to control unit. Occasionally, micro processor may malfunction and need to be reset. This can be done by pressing RESET button with a pen, which will shut down and restart unit. Do not use RESET function excessively.

AUDIO OUTPUT JACKS

Connect an external audio amplifier to these jacks.
(Refer to P14, 15.)

CONNECTING TO COMPUTER

Cables used for connection (∗ = Cables are not supplied with this projector.)

- VGA Cable (HDB 15 pin)
- Control Cable for PS/2 port, Serial port, or ADB port
- MAC/VGA Adapter, DVI/VGA Adapter
- DVI Cable
- BNC Cable (BNC x 5) ∗
- Audio Cables (RCA x 2) ∗

NOTE :
When connecting cable, power cords of both a projector and external equipment should be disconnected from AC outlet. Turn a projector and peripheral equipment on before computer is switched on.

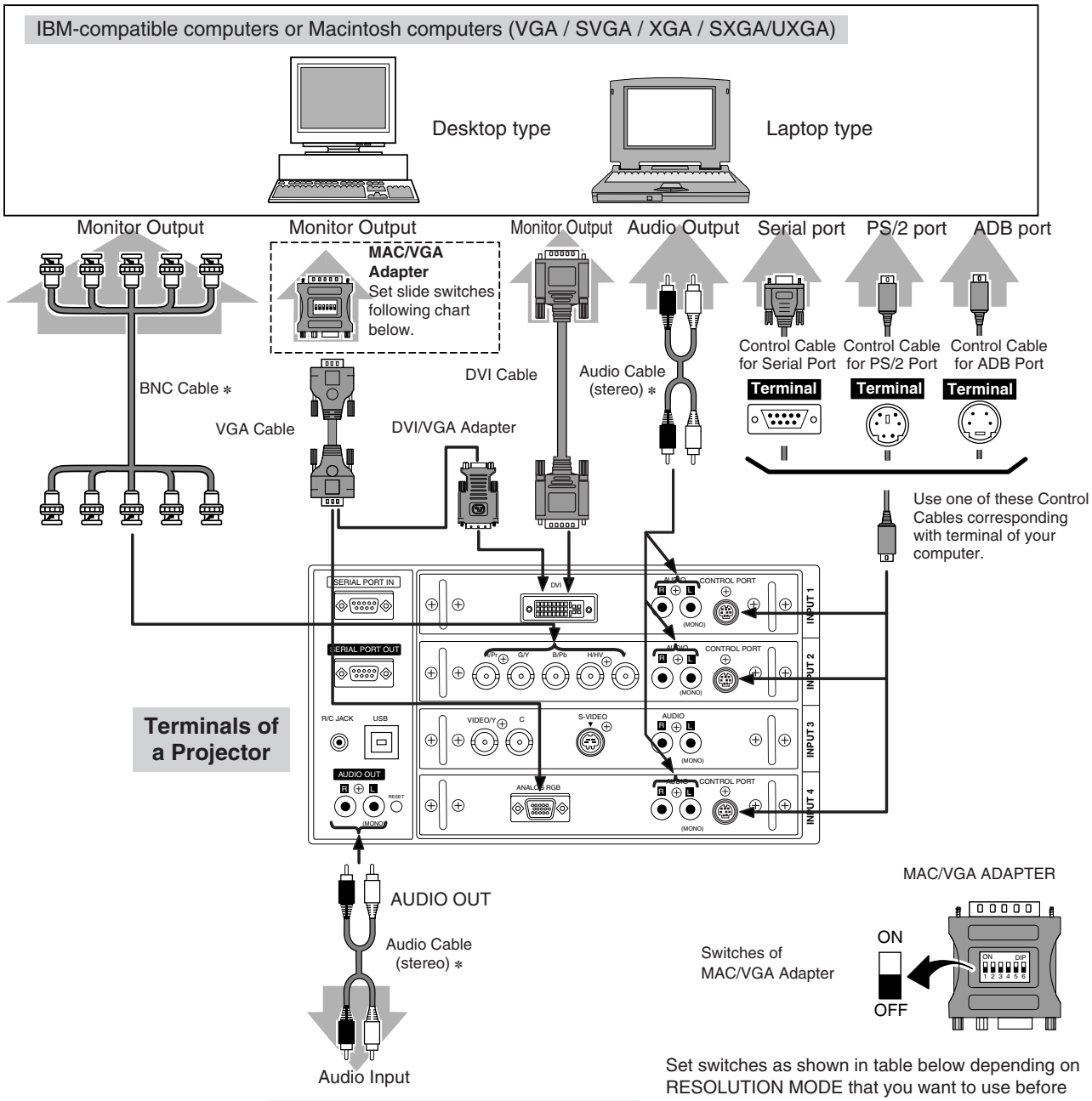

Set switches as shown in table below depending on RESOLUTION MODE that you want to use before your turn on a projector and computer

MODE \ SWITCHES	1	2	3	4	5	6
13"MODE (640 x 480)	ON	ON	OFF	OFF	OFF	OFF
16"MODE (832 x 624)	OFF	ON	OFF	ON	OFF	OFF
19"MODE (1024 x768)	OFF	ON	ON	OFF	OFF	OFF
21"MODE (1152 x 870)	ON	ON	ON	ON	OFF	OFF

CONNECTING TO VIDEO EQUIPMENT

Cables used for connection

- Video Cable (BNC x 1, BNC x 2 or BNC x 3) ∗
- S-VIDEO Cable ∗
- Audio Cable (RCA x 2) ∗

(∗ = Cables are not supplied with this projector.)

NOTE :
When connecting cable, power cords of both a projector and external equipment should be disconnected from AC outlet. Turn a projector and peripheral equipment on before computer is switched on.

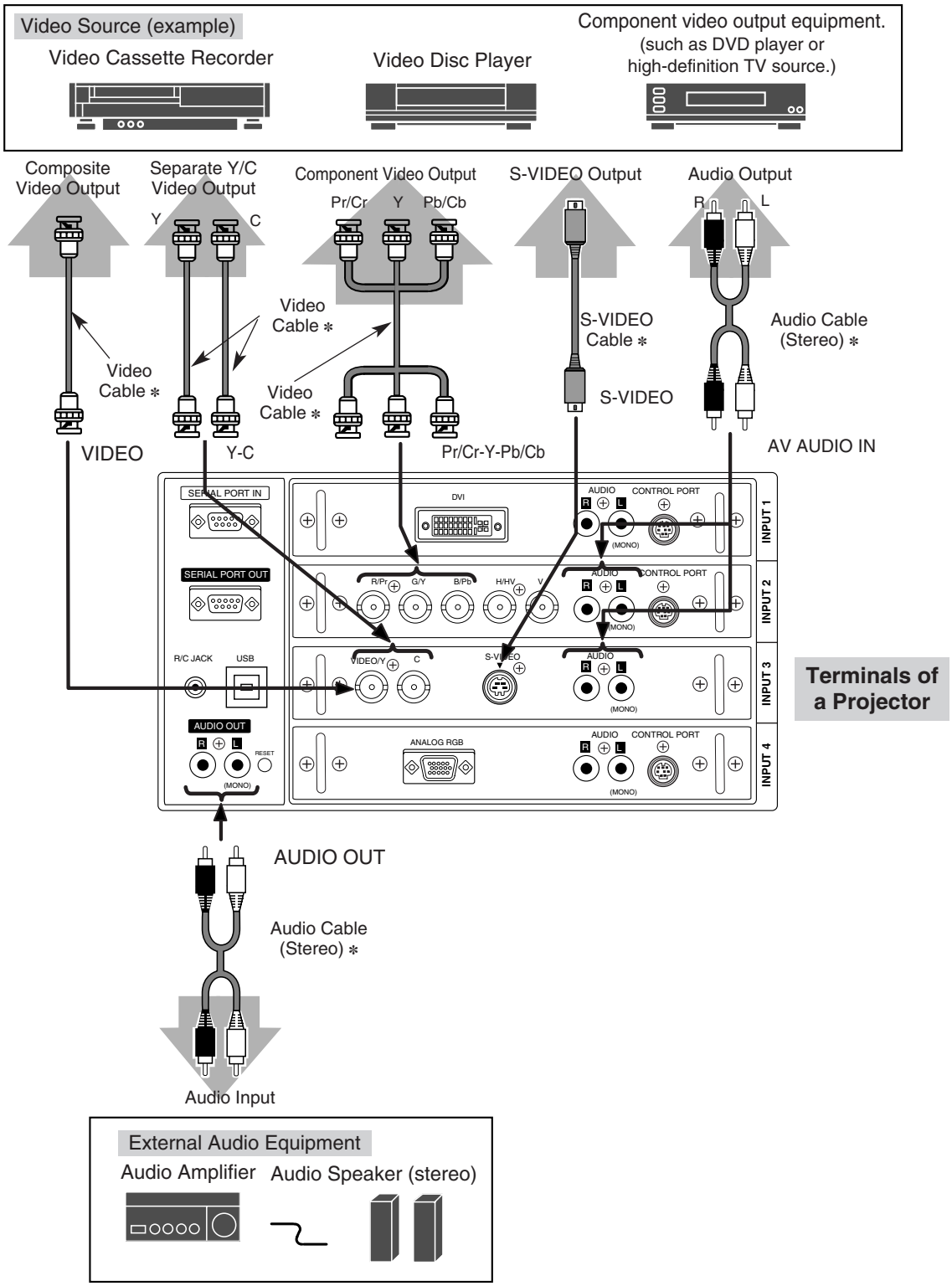

SIDE CONTROLS AND INDICATORS

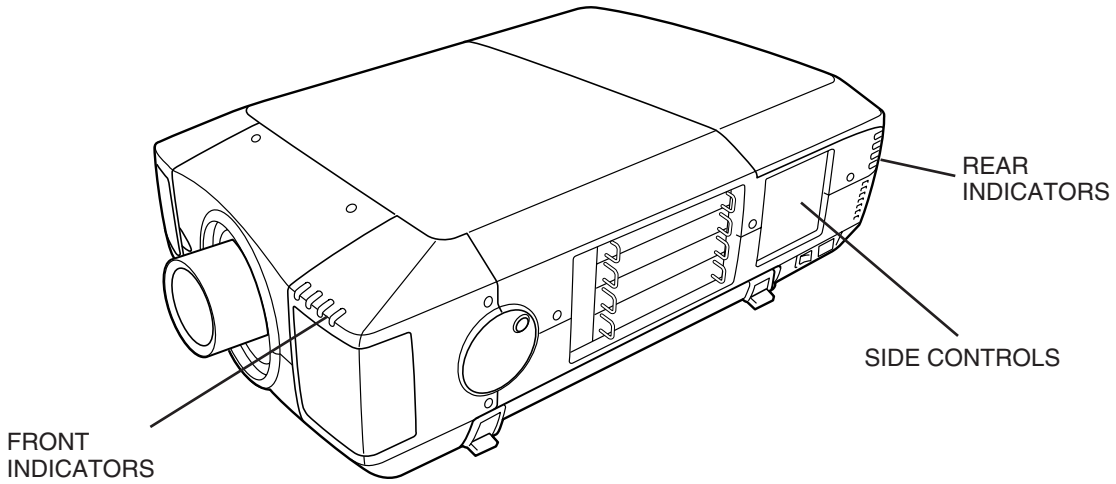

SIDE CONTROLS

ZOOM BUTTONS

Used to adjust zoom. (P23)

FOCUS BUTTONS

Used to adjust focus. (P23)

VOLUME BUTTONS

Used to adjust volume. (P25)

POWER ON–OFF BUTTON

Used to turn a projector on or off. (P22)

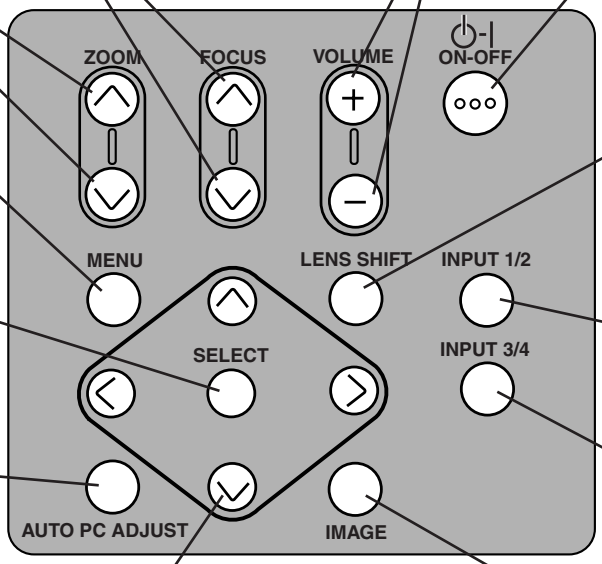

MENU BUTTONS

Used to open or close MENU operation. (P20, 21)

SELECT BUTTON

Used to execute item selected. It is also used to expand image in DIGITAL ZOOM mode. (P34)

AUTO PC ADJ. BUTTON

Use to operate AUTO PC Adjustment function. (P29)

LENS SHIFT BUTTONS

Used to select LENS SHIFT function. (P23)

INPUT 1/2 BUTTON

Used to select input source either INPUT 1 or INPUT 2. (P26)

INPUT 3/4 BUTTON

Used to select input source either INPUT 3 or INPUT 4. (P26)

POINT BUTTONS

Used to select an item or adjust value in MENU. It is also used to pan image in DIGITAL ZOOM mode. (P34)

IMAGE BUTTON

Used to select image level. (P32, 37)

INDICATORS

FRONT INDICATORS

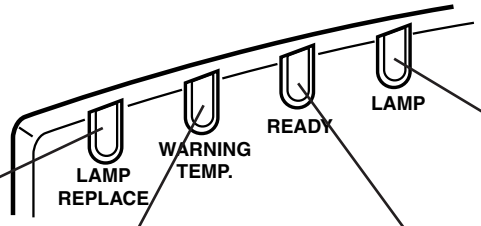

LAMP REPLACE INDICATOR

This LAMP REPLACE indicator lights yellow when any of Projection Lamps is nearing its end, and flashes when any of them becomes out. Check which lamp needs to be replaced on Lamp Status Display.

(P45-47)

WARNING TEMP. INDICATOR

This indicator flashes red when internal projector temperature is too high. (P43)

READY INDICATOR

This indicator lights green when a projector is ready to be turned on. And it flashes green in Power Management mode. (P41)

LAMP INDICATOR

This indicator is dim when a projector is turned on. And bright when a projector is in stand-by mode.

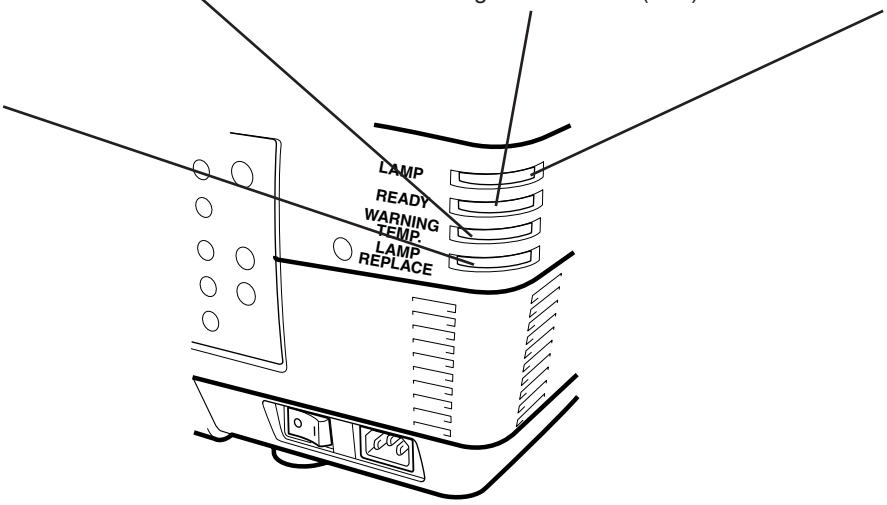

REAR INDICATORS

OPERATION OF REMOTE CONTROL

Left Side

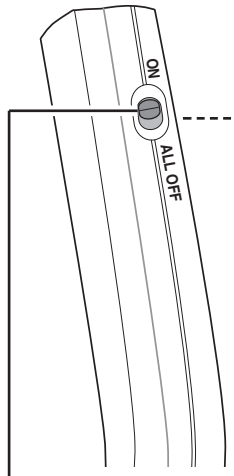

ALL-OFF SWITCH

When using Remote Control Unit, turn this switch to "ON." And turn it to "ALL OFF" when it is not used.

LASER POINTER INDICATOR

Lights red while laser beam is emitted from Laser Light Window.

MENU BUTTON

Used to select MENU operation. (P20, 21)

SELECT BUTTON

Used to execute item selected, or to expand or compress image in DIGITAL ZOOM +/– mode. (P34)
It is also used as a PC mouse in Wireless Mouse Operation. (P43)

LASER BUTTON

Used to operate Laser Pointer Function. Laser beam is emitted while pressing this button within 1 minute.
When using this Laser Pointer for more than 1 minute, release LASER button and press it again.

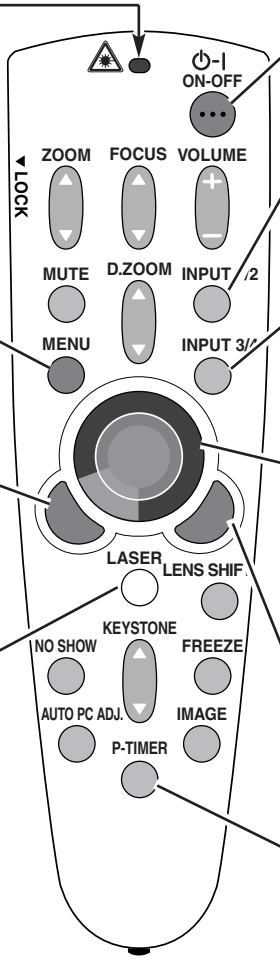

POWER ON-OFF BUTTON

Used to turn projector on or off. (P22)

INPUT 1/2 BUTTON

Used to select input source either INPUT 1 or INPUT 2. (P26)

INPUT 3/4 BUTTON

Used to select input source either INPUT 3 or INPUT 4. (P26)

POINT BUTTON

Used to move a pointer on ON-SCREEN MENU, adjust each item, or pan image in DIGITAL ZOOM +/– mode. (P34)
It is also used as a PC mouse in Wireless Mouse Operation. (P43)

✻ When pressing center of this button, it works as SELECT button.

RIGHT CLICK BUTTON

Used as a PC mouse in Wireless Mouse Operation. (P43)

P-TIMER BUTTON

Used to operate P-TIMER function. (P24)

LASER POINTER FUNCTION

This Remote Control Unit emits a laser beam as laser pointer function from Laser Light Window. When LASER button is pressed, laser light goes on. And when LASER button is being pressed for more than 1 minute or LASER button is released, light goes off. LASER POINTER INDICATOR lights RED and Laser is emitted with RED light to indicate laser beam is being emitted.
Laser emitted is a class II laser; therefore, do not look into Laser Light Window or shine laser beam on yourself or other people. Three marks bellow are caution labels for laser beam.

CAUTION : Use of controls, adjustments or performance of procedures other than those specified herein may result hazardous radiation exposure.

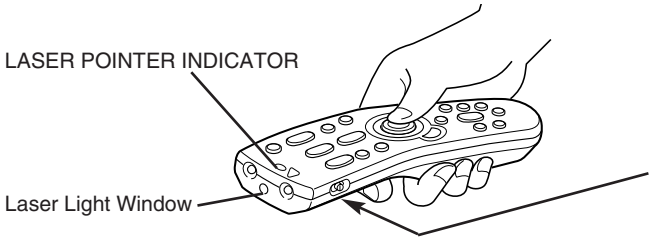

These caution labels are put on remote control.

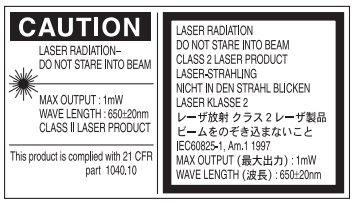

AVOID EXPOSURE-LASER RADIATION IS EMITTED FROM THIS APERTURE
レーザー光の出口
ビームをのぞき込まないこと

ZOOM BUTTON
Used to adjust zoom. (P23)

FOCUS BUTTON
Used to adjust focus. (P23)

MUTE BUTTON
Used to mute sound.(P25)

NO SHOW BUTTON
Used to turn picture into black image. (P24)

AUTO PC ADJ. BUTTON
Use to operate AUTO PC Adjustment function. (P29)

WIRED REMOTE JACK
When using as Wired Remote Control, connect Remote Control Cable to this jack.
Battery installation is required when using as Wired Remote Control.

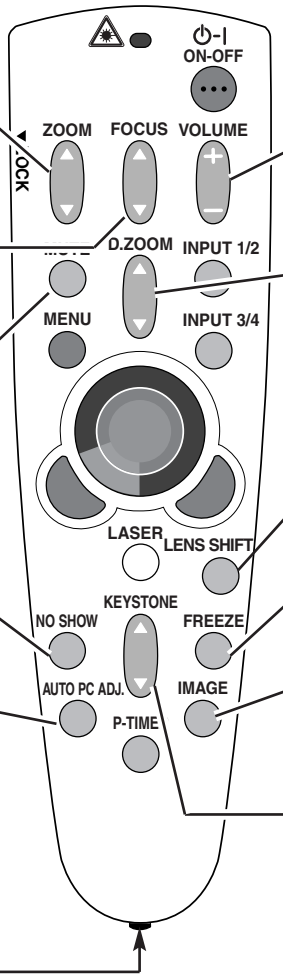

VOLUME BUTTON
Used to adjust volume. (P25)

D.ZOOM BUTTON
Used to select DIGITAL ZOOM +/– mode and resize image. (P34)

LENS SHIFT BUTTON
Used to select LENS SHIFT function. (P23)

FREEZE BUTTON
Used to freeze picture. (P24)

IMAGE BUTTON
Used to select image level. (P32, 37)

KEYSTONE BUTTON
Used to correct keystone distortion. (P23, 40)

Operating Range

Point Remote Control Unit toward projector (Receiver Window) whenever pressing any button. Maximum operating range for Remote Control Unit is about 16.4' (5m) and 60° in front and rear of a projector.

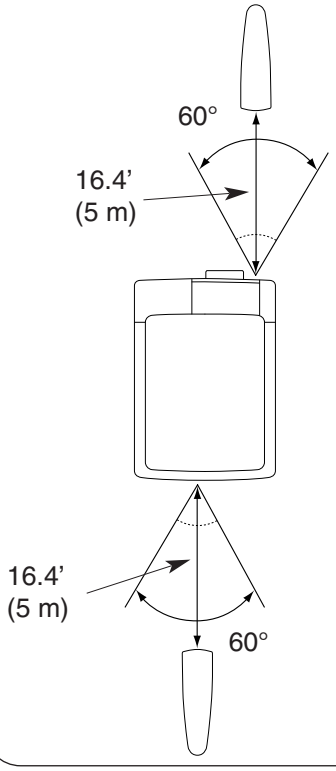

Remote Control Batteries Installation

1 Remove battery compartment lid.

Press lid downward and slide it.

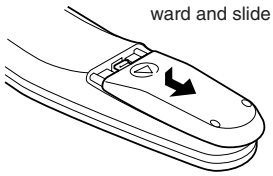

2 Slide batteries into compartment.

Two AA size batteries
For correct polarity (+ and –), be sure battery terminals are in contact with pins in compartment.

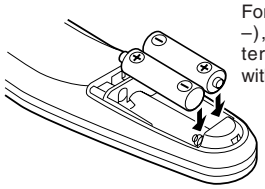

3 Replace compartment lid.

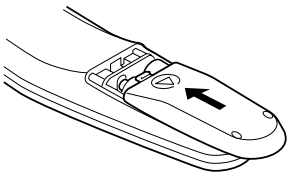

To insure safe operation, please observe following precautions :

- Use (2) AA, UM3 or R06 type alkaline batteries.
- Replace two batteries at same time.
- Do not use a new battery with an used battery.
- Avoid contact with water or liquid.
- Do not expose Remote Control Unit to moisture, or heat.
- Do not drop Remote Control Unit.
- If a battery has leaked on Remote Control Unit, carefully wipe case clean and install new batteries.
- Danger of explosion if battery is incorrectly replaced.
- Dispose of used batteries according to the batteries manufacturers instructions and local rules.

OPERATING ON-SCREEN MENU

HOW TO OPERATE ON-SCREEN MENU

You can control and adjust this projector through ON-SCREEN MENU. Refer to following pages to operate each adjustment on ON-SCREEN MENU.

1 DISPLAY MENU

Press MENU button to display ON-SCREEN MENU.

2 MOVING POINTER

Move pointer (✻ see below) or adjust value of item by pressing POINT button(s) on Side Control or on Remote Control Unit.

✻ Pointer is a icon on ON-SCREEN MENU to select item. See figures on section "FLOW OF ON-SCREEN MENU OPERATION" below.

3 SELECT ITEM

Select item or set selected function by pressing SELECT button.

WIRELESS REMOTE CONTROL

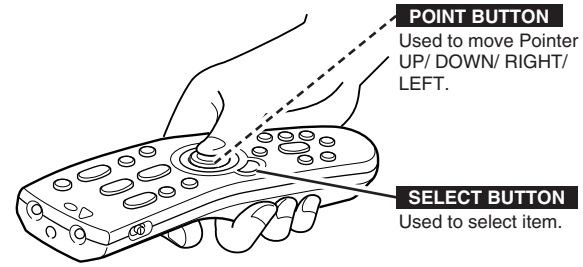

SIDE CONTROL

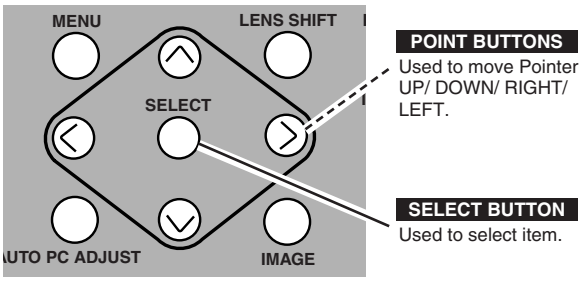

FLOW OF ON-SCREEN MENU OPERATION

Display ON-SCREEN MENU

1 Press MENU button to display ON-SCREEN MENU (MENU BAR). A red frame is POINTER.

Select Menu to be adjusted

2 Move POINTER (red frame) to MENU ICON that you want to select by pressing POINT RIGHT / LEFT buttons.

Control or adjust item through ON-SCREEN MENU

3 Press POINT DOWN button and move POINTER (red frame or red arrow) to ITEM that you want to adjust, and then press SELECT button to show ITEM DATA.

4 Adjust ITEM DATA by pressing POINT RIGHT / LEFT buttons.
Refer to following pages for details of respective adjustments.

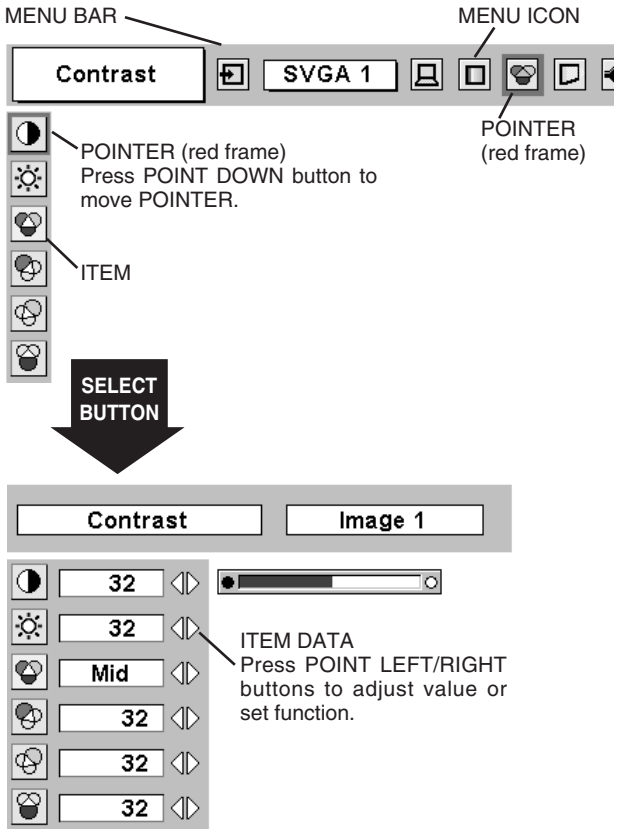

MENU BAR

FOR PC SOURCE Press MENU BUTTON while connecting to PC input source.

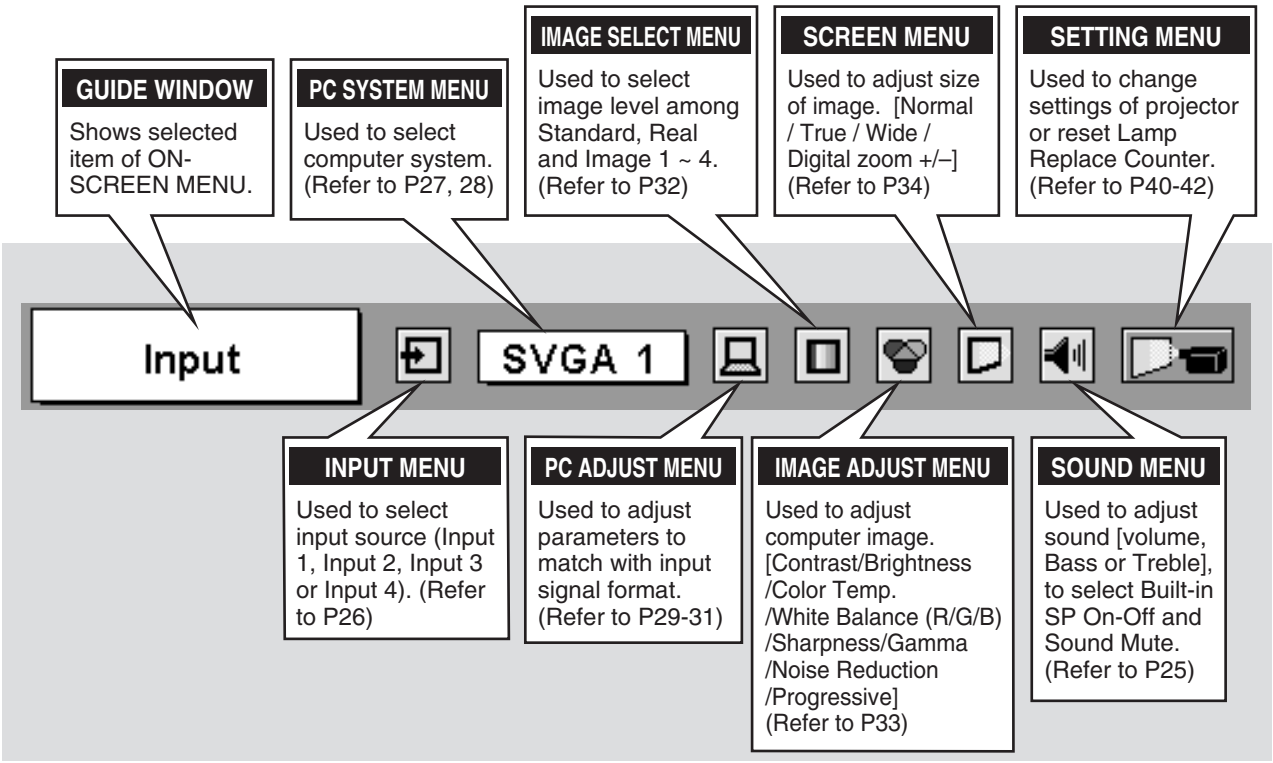

FOR VIDEO SOURCE Press MENU BUTTON while connecting to VIDEO input source.

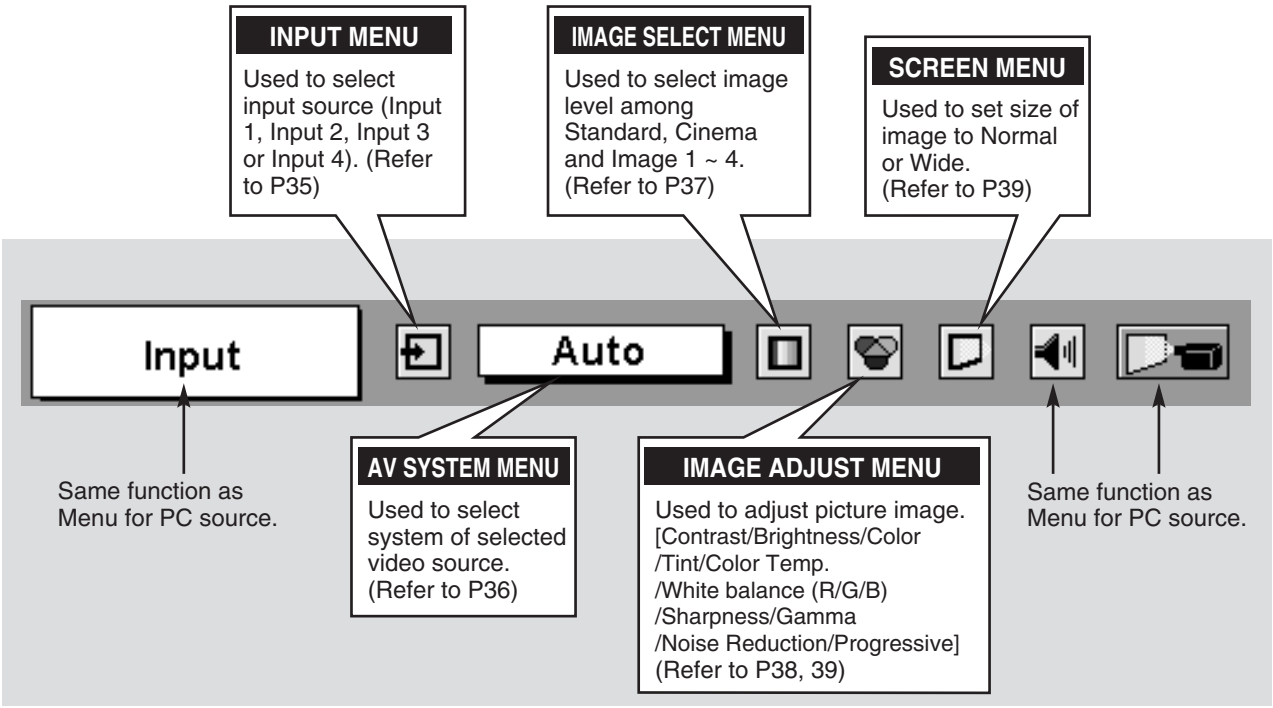

TURNING ON / OFF PROJECTOR

TURNING ON PROJECTOR

1 Complete peripheral connections (with Computer, VCR, etc.) before turning on projector. (Refer to "CONNECTING TO PROJECTOR" on Pages 12~15 for connecting that equipment.)

2 Connect a projector's AC Power Cord into a wall outlet and turn MAIN ON / OFF SWITCH to ON. LAMP indicator lights RED, and READY indicator lights GREEN.

3 Press POWER ON-OFF button on Side Control or on Remote Control Unit to ON. LAMP indicator dims, and Cooling Fans start to operate. Preparation Display appears on a screen and count-down starts. Signal from source appears after 30 seconds. Current Input position and Lamp status are also displayed on screen for 5 seconds. (Refer to "LAMP MANAGEMENT" on page 45.)

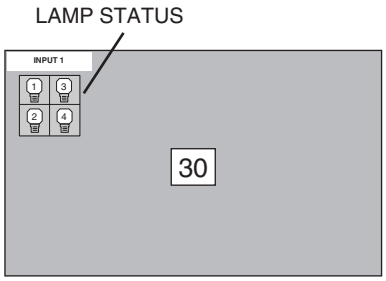

Preparation Display disappears after 30 seconds.

TURNING OFF PROJECTOR

1 Press POWER ON-OFF button on Side Control or on Remote Control Unit, and a message "Power off?" appears on a screen.

2 Press POWER ON-OFF button again to turn off projector. LAMP indicator lights bright and READY indicator turns off. After approximate 90 seconds, READY indicator will light green again and projector may be turned on by pressing POWER ON-OFF button.

3 Cooling fans will operate for approximate 2 minutes after projector is turned off. To power down completely, turn MAIN ON/OFF SWITCH to OFF and disconnect AC Power Cord.

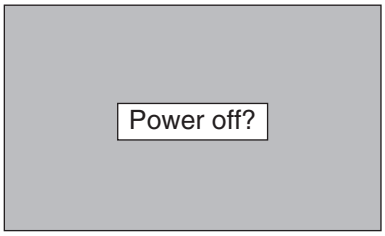

Message disappears after 4 seconds.

⚠ TO MAINTAIN LIFE OF LAMP, ONCE YOU TURN PROJECTOR ON, WAIT AT LEAST 5 MINUTES BEFORE TURNING IT OFF.

When Power Management function is ON, projector detects signal interruption and turns off Projection Lamp automatically. Refer to “Power Management” on pages 40 and 41.

When WARNING TEMP. indicator flashes red, projector is automatically turned off. Wait at least 5 minutes before turning on projector again.

When both WARNING TEMP. and READY indicators to flash, follow procedures below:
1. Turn MAIN ON / OFF SWITCH to OFF.
2. Turn a projector on again.

When WARNING TEMP. indicator continues to flash, follow procedures below:
1. Turn MAIN ON / OFF SWITCH to OFF and disconnect AC Power Cord from an AC outlet.
2. Check Air Filters for dust accumulation.
3. Clean Air Filters. (See "AIR FILTER CARE AND CLEANING" section on page 44.)
4. Turn a projector on again.

If WARNING TEMP. indicator should still continue to flash, contact sales dealer where you purchased this projector or service center.

ADJUSTING SCREEN

ZOOM ADJUSTMENT

1. Press ZOOM ▲/▼ button on Side Control or on Remote Control Unit. Message “Zoom” is displayed.
2. Press ZOOM ▲ button to make image larger, and press ZOOM ▼ button to make image smaller.

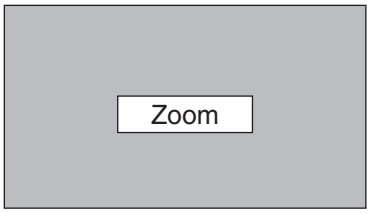

Message disappears after 4 seconds.

FOCUS ADJUSTMENT

1. Press FOCUS ▲/▼ button on Side Control or on Remote Control Unit. Message “Focus” is displayed.
2. Adjust focus of image by pressing FOCUS ▲/▼ button(s) .

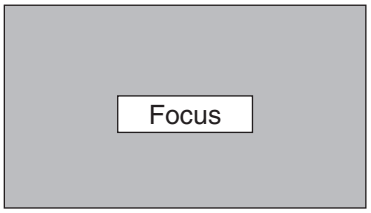

Message disappears after 4 seconds.

LENS SHIFT ADJUSTMENT

1. Press the LENS SHIFT button on Side Control or on the Remote Control Unit. Message “Lens shift” is displayed.
2. Press POINT UP button to move image up, press POINT DOWN button to move image down, press POINT LEFT to move image left and press POINT RIGHT to move image right.

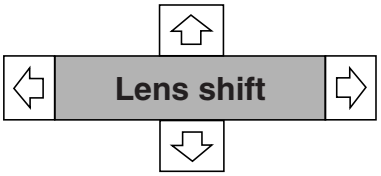

Message disappears after 4 seconds.

KEYSTONE ADJUSTMENT

If a projected picture has keystone distortion, correct image with KEYSTONE adjustment.

1. Press KEYSTONE ▲/▼ button on Remote Control Unit or select Keystone on SETTING menu. (Refer to page 40.) Keystone dialog box appears.
2. Correct keystone distortion by pressing KEYSTONE ▲/▼ button or POINT UP/DOWN button(s). Press KEYSTONE ▲ button or POINT UP button to reduce upper part of image, and press KEYSTONE ▼ button or POINT DOWN button to reduce lower part.

Reduce upper width with KEYSTONE ▲ button or POINT UP button.

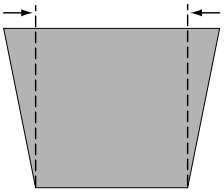

Reduce lower width with KEYSTONE ▼ button or POINT DOWN button.

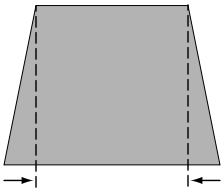

PICTURE FREEZE FUNCTION

Press FREEZE button on Remote Control Unit to freeze picture on-screen. To cancel FREEZE function, press FREEZE button again or press any other button except POINT / SELECT / RIGHT CLICK / LASER button.

NO SHOW FUNCTION

Press NO SHOW button on Remote Control Unit to black out a image. To restore to normal, press NO SHOW button again or press any other button except POINT / SELECT / RIGHT CLICK / LASER button.

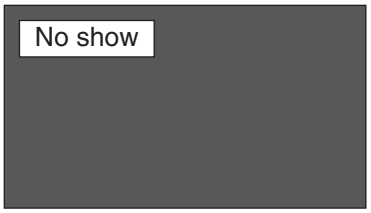

Message disappears after 4 seconds.

P-TIMER FUNCTION

Press P-TIMER button on Remote Control unit. Timer display “00 : 00” appears on a screen and timer starts to count time (00 : 00 ~ 59 : 59).
To stop P-TIMER display, press P-TIMER button. And then, press P-TIMER button again to cancel P-TIMER function.

SOUND ADJUSTMENT

DIRECT OPERATION

Volume

Press VOLUME (+/–) button(s) on Side Control or on Remote Control Unit to adjust volume. Volume dialog box appears on screen for a few seconds.
(+) button to increase volume, and (–) button for decreasing.

Mute

Press MUTE button on Remote Control Unit to cut off sound. To restore sound to its previous level, press MUTE button again or press Volume (+/–) button(s).

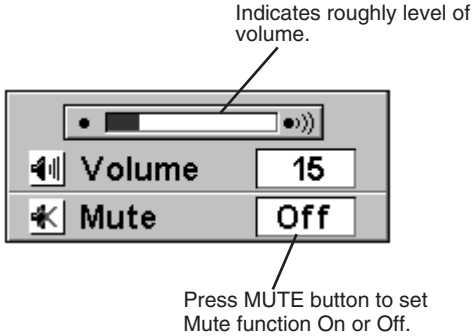

Display disappears after 4 seconds.

MENU OPERATION

1 Press MENU button and ON-SCREEN MENU will appear. Press POINT LEFT/RIGHT buttons to move a red frame pointer to SOUND Menu icon.

2 Press POINT DOWN button to move a red frame pointer to item that you want to select, and then press SELECT button.

SOUND MENU

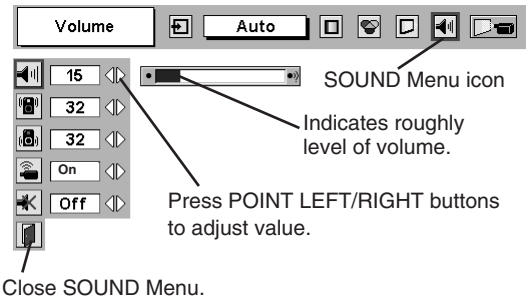

Volume

To increase volume, press POINT RIGHT button, and press POINT LEFT button for decreasing.

Treble

To adjust Treble sound, press POINT RIGHT button or POINT LEFT button.

Bass

To adjust Bass sound, press POINT RIGHT button or POINT LEFT button.

Built-in SP.

Press POINT LEFT/RIGHT button(s) to switch built-in speaker on and off.

Mute

Press POINT LEFT/RIGHT button(s) to cut off sound. Dialog box display is changed to “On” and sound is cut off. To restore sound to its previous level, press POINT LEFT/RIGHT button(s) again.

Quit

Closes SOUND MENU.

SELECTING INPUT SOURCE

DIRECT OPERATION

Select INPUT source by pressing INPUT 1/2 and INPUT 3/4 buttons on Side Control or on Remote Control Unit.

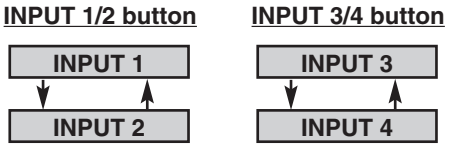

MENU OPERATION

1 Press MENU button and ON-SCREEN MENU will appear. Press POINT LEFT/RIGHT buttons to select Input and press SELECT button. Another dialog box INPUT SELECT Menu will appear.

2 Press POINT DOWN button and a red-arrow icon will appear. Move arrow to INPUT source that you want to select, and then press SELECT button.

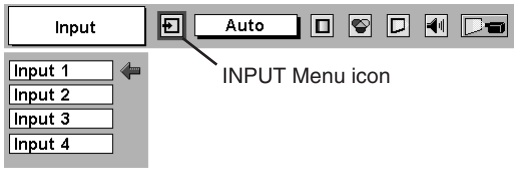

SELECTING COMPUTER SYSTEM

WHEN SELECT INPUT 1 (DVI INPUT TERMINAL)

1 Press MENU button and ON-SCREEN MENU will appear. Press POINT LEFT/RIGHT button to move a red frame pointer to INPUT Menu icon.

2 Press POINT DOWN button to move a red arrow pointer to Input 1 and then press SELECT button. Source Select Menu will appear.

3 Move a pointer to either Digital or Analog and then press SELECT button.

Digital When digital signal is connected on DVI terminal, select Digital.

Analog When analog signal is connected on DVI terminal, select Analog.

INPUT MENU

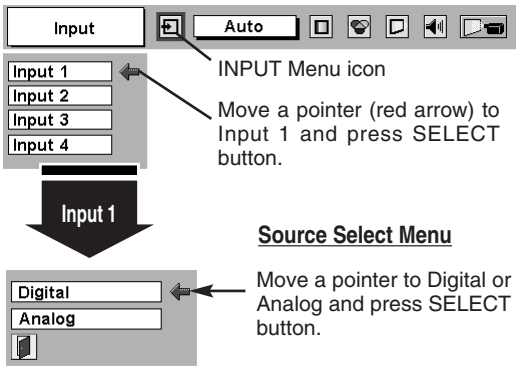

WHEN SELECT INPUT 2 (5 BNC INPUT JACKS)

When connecting a computer output [5 BNC Type (Red, Green, Blue, Horiz. Sync and Vert. Sync.)] from a computer to R/Pr, G/Y, B/Pb, H/HV and V jacks.

1 Press MENU button and ON-SCREEN MENU will appear. Press POINT LEFT/RIGHT button to move a red frame pointer to INPUT Menu icon.

2 Press POINT DOWN button to move a red arrow pointer to Input 2 and then press SELECT button. Source Select Menu will appear.

3 Press POINT DOWN button and a red-arrow icon will appear. Move arrow to "RGB", and then press SELECT button.

INPUT MENU

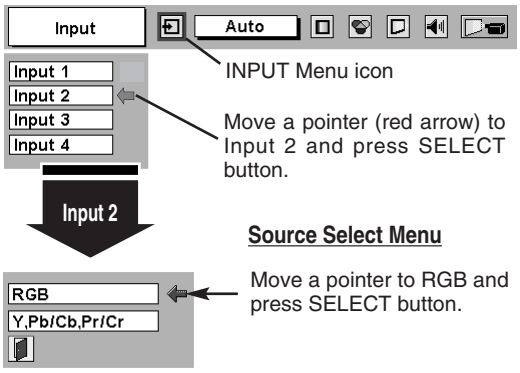

AUTOMATIC MULTI-SCAN SYSTEM

This projector automatically tunes to most different types of computers based on VGA, SVGA, XGA, SXGA or UXGA (refer to "COMPATIBLE COMPUTER SPECIFICATIONS" on page 28). When selecting Computer, this projector automatically tunes to incoming signal and projects proper image without any special setting. (Some computers need setting manually.)

Note : Projector may display one of following messages.

Auto When projector can not recognize connected signal as PC system provided in this projector, Auto PC Adjustment function operates to adjust projector and message "Auto" is displayed on SYSTEM Menu icon. (Refer to P29.) When image is not provided properly, manual adjustment is required. (Refer to P29 and 30.)

—— There is no signal input from computer. Make sure connection of computer and a projector is set correctly. (Refer to TROUBLESHOOTING on page 48.)

D-VGA, D-SVGA, D-XGA, D-SXGA 1, D-SXGA 2, D-SXGA 3 or D-UXGA

When digital computer signal is received on DVI terminal, above message is displayed on PC SYSTEM Menu icon.

PC SYSTEM MENU

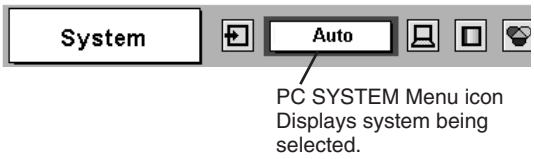

SELECT COMPUTER SYSTEM MANUALLY

This projector automatically selects PC system among those provided in this projector and PC system can be also selected manually.

1 Press MENU button and ON-SCREEN MENU will appear. Press POINT LEFT/RIGHT buttons to move a red frame pointer to PC SYSTEM Menu icon.

2 Press POINT DOWN button to move a red arrow pointer to system that you want to set, and then press SELECT button.

PC SYSTEM MENU

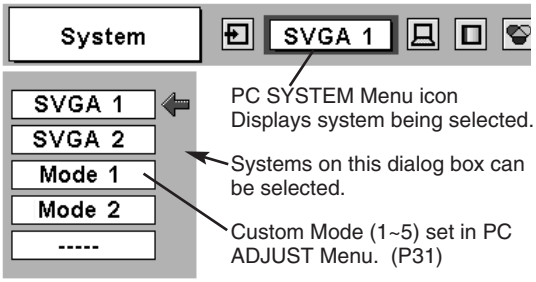

COMPATIBLE COMPUTER SPECIFICATIONS

Basically this projector can accept a signal from all computers with V, H-Frequency mentioned below and less than 230 MHz of Dot Clock.

ON-SCREEN DISPLAY	RESOLUTION	H-Freq. (kHz)	V-Freq. (Hz)
VGA 1	640 x 480	31.47	59.88
VGA 2	720 x 400	31.47	70.09
VGA 3	640 x 400	31.47	70.09
VGA 4	640 x 480	37.86	74.38
VGA 5	640 x 480	37.86	72.81
VGA 6	640 x 480	37.50	75.00
VGA 7	640 x 480	43.269	85.00
MAC LC13	640 x 480	34.97	66.60
MAC 13	640 x 480	35.00	66.67
RGB	(Interlace)	15.734	30
RGB	(Interlace)	15.625	25
480p	(Progressive)	31.47	59.88
575p	(Progressive)	31.25	50
SVGA 1	800 x 600	35.156	56.25
SVGA 2	800 x 600	37.88	60.32
SVGA 3	800 x 600	46.875	75.00
SVGA 4	800 x 600	53.674	85.06
SVGA 5	800 x 600	48.08	72.19
SVGA 6	800 x 600	37.90	61.03
SVGA 7	800 x 600	34.50	55.38
SVGA 8	800 x 600	38.00	60.51
SVGA 9	800 x 600	38.60	60.31
SVGA 10	800 x 600	32.70	51.09
SVGA 11	800 x 600	38.00	60.51
MAC 16	832 x 624	49.72	74.55
XGA 1	1024 x 768	48.36	60.00
XGA 2	1024 x 768	68.677	84.997
XGA 3	1024 x 768	60.023	75.03
XGA 4	1024 x 768	56.47	70.07
XGA 5	1024 x 768	60.31	74.92
XGA 6	1024 x 768	48.50	60.02
XGA 7	1024 x 768	44.00	54.58
XGA 8	1024 x 768	63.48	79.35
XGA 9	1024 x 768 (Interlace)	36.00	43.59
XGA 10	1024 x 768	62.04	77.07
XGA 11	1024 x 768	61.00	75.70
XGA 12	1024 x 768 (Interlace)	35.522	43.48

ON-SCREEN DISPLAY	RESOLUTION	H-Freq. (kHz)	V-Freq. (Hz)
XGA 13	1024 x 768	46.90	58.20
XGA 14	1024 x 768	47.00	58.30
XGA15	1024 x 768	58.03	72.0
MAC 19	1024 x 768	60.24	75.08
MAC 21	1152 x 870	68.68	75.06
SXGA 1	1152 x 864	64.20	70.40
SXGA 2	1280 x 1024	62.50	58.60
SXGA 3	1280 x 1024	63.90	60.00
SXGA 4	1280 x 1024	63.34	59.98
SXGA 5	1280 x 1024	63.74	60.01
SXGA 6	1280 x 1024	71.69	67.19
SXGA 7	1280 x 1024	81.13	76.107
SXGA 8	1280 x 1024	63.98	60.02
SXGA 9	1280 x 1024	79.976	75.025
SXGA 10	1280 x 960	60.00	60.00
SXGA 11	1152 x 900	61.20	65.20
SXGA 12	1152 x 900	71.40	75.60
SXGA 13	1280 x 1024 (Interlace)	50.00	43.00
SXGA 14	1280 x 1024 (Interlace)	50.00	47.00
SXGA 15	1280 x 1024	63.37	60.01
SXGA 16	1280 x 1024	76.97	72.00
SXGA 17	1152 x 900	61.85	66.00
SXGA 18	1280 x 1024 (Interlace)	46.43	43.35
SXGA 19	1280 x 1024	63.79	60.18
SXGA 20	1280 x 1024	91.146	85.024
SXGA 21	1400 x 1050	63.93	60.00
MAC	1280 x 960	75.00	75.08
MAC	1280 x 1024	80.00	75.08
UXGA 1	1600 x 1200	75.00	60.00
UXGA 2	1600 x 1200	81.25	65.00
UXGA 3	1600 x 1200	87.50	70.00
UXGA 4	1600 x 1200	93.750	75.00
720p	(Progressive)	45.00	60.00
1035i	(Interlace)	33.75	30.00
1080i60	(Interlace)	33.75	30.00
1080i50	(Interlace)	31.25	25.00

When a input signal is digital from DVI terminal, refer to chart below.

ON-SCREEN DISPLAY	RESOLUTION	H-Freq. (kHz)	V-Freq. (Hz)
D-VGA	640 x 480	31.469	59.940
D-SVGA	800 x 600	37.879	60.317
D-XGA	1024 x 768	48.363	60.004
D-SXGA 1	1280 x 1024	63.981	60.020

ON-SCREEN DISPLAY	RESOLUTION	H-Freq. (kHz)	V-Freq. (Hz)
D-SXGA 2	1280 x 1024	60.276	58.069
D-SXGA 3	1280 x 1024	31.65	29.8
D-UXGA	1600 x 1200	75.00	60.00

NOTE : Specifications are subject to change without notice.

PC ADJUSTMENT

AUTO PC ADJUSTMENT

Auto PC Adjustment function is provided to automatically adjust Fine sync, Total dots and Picture Position to conform to your computer. Auto PC Adjustment function can be operated as follows.

Auto PC Adj.

1 Press MENU button and ON-SCREEN MENU will appear. Press POINT LEFT/RIGHT button to move a red frame pointer to PC ADJUST Menu icon.

2 Press POINT DOWN button to move a red frame pointer to AUTO PC Adj. icon and then press SELECT button twice.
This Auto PC Adjustment can be also executed by pressing AUTO PC ADJ. button on Side Control or on Remote Control Unit.

Store adjustment parameters.
Adjustment parameters from Auto PC Adjustment can be memorized in this projector. Once parameters are memorized, setting can be done just by selecting Mode in PC SYSTEM Menu (P26). Refer to step 3 of MANUAL PC ADJUSTMENT section (P30).

PC ADJUST MENU

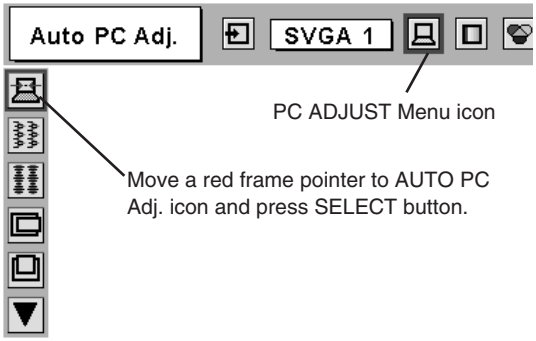

NOTE

- Fine sync, Total dots and Picture Position of some computers can not be fully adjusted with this Auto PC Adjustment function. When image is not provided properly through this function, manual adjustments are required. (Refer to page 30, 31.)
- Auto PC Adjustment function can not be operated in Digital Signal input on DVI terminal and “RGB”, “480p”, “575p”, “720p (HDTV)”, “1035i (HDTV)”, “1080i50 (HDTV)” or “1080i60 (HDTV)” is selected on PC SYSTEM Menu (P27).

MANUAL PC ADJUSTMENT

This projector can automatically tune to display signals from most personal computers currently distributed. However, some computers employ special signal formats which are different from standard ones and may not be tuned by Multi-Scan system of this projector. If this happens, projector can not reproduce a proper image and image may be recognized as a flickering picture, a non-synchronized picture, a non-centered picture or a skewed picture.
This projector has a Manual PC Adjustment to enable you to precisely adjust several parameters to match with those special signal formats. This projector has 5 independent memory areas to memorize those parameters manually adjusted. This enables you to recall setting for a specific computer whenever you use it.

Note : This PC ADJUST Menu can not be operated in Digital Signal input on DVI terminal is selected on PC SYSTEM MENU (P27).

1 Press MENU button and ON-SCREEN MENU will appear. Press POINT LEFT/RIGHT button to move a red frame pointer to PC ADJUST Menu icon.

2 Press POINT DOWN button to move a red frame pointer to item that you want to adjust and then press SELECT button. Adjustment dialog box will appear. Press POINT LEFT/RIGHT button to adjust value.

Fine sync

Adjusts an image as necessary to eliminate flicker from display. Press POINT LEFT/RIGHT button to adjust value.(From 0 to 31.)

Total dots

Number of total dots in one horizontal period. Press POINT LEFT/RIGHT button(s) and adjust number to match your PC image.

Horizontal

Adjusts horizontal picture position. Press POINT LEFT/RIGHT button(s) to adjust position.

Vertical

Adjusts vertical picture position. Press POINT LEFT/RIGHT button(s) to adjust position.

Current mode

Press SELECT button to show information of computer selected.

Clamp

Adjusts clamp position. When a image has a dark bar(s), try this adjustment.

PC ADJUST MENU

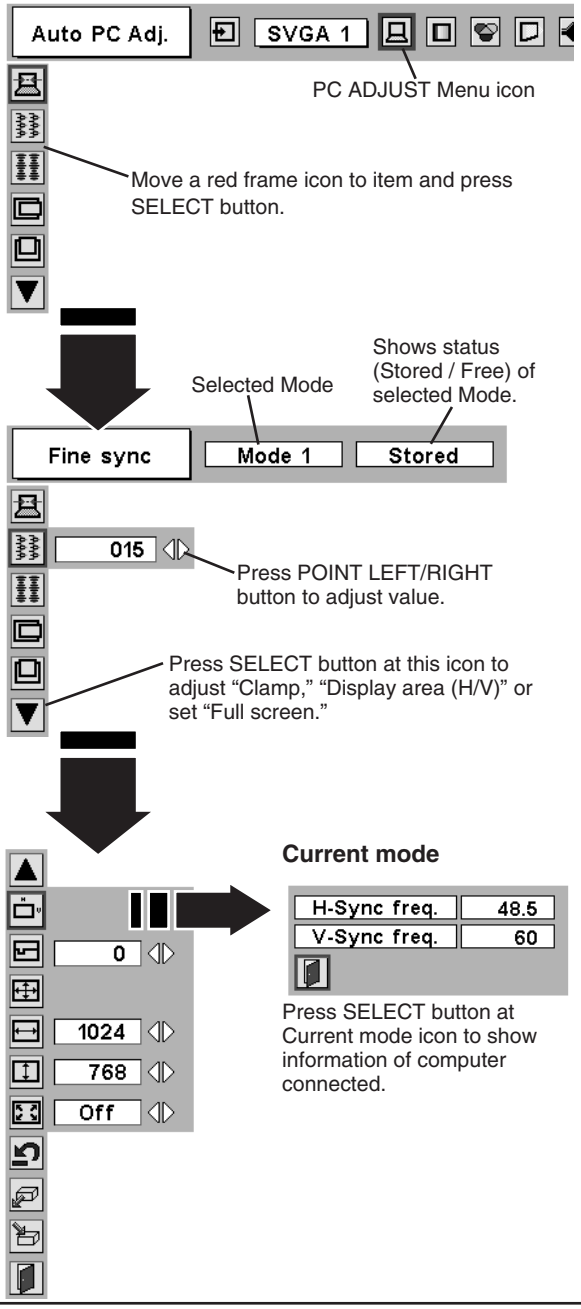

Display area

Selects area displayed with this projector. Select resolution at Display area dialog box.

Display area H

Adjustment of horizontal area displayed with this projector. Press POINT LEFT/RIGHT button(s) to decrease/increase value and then press SELECT button.

Display area V

Adjustment of vertical area displayed with this projector. Press POINT LEFT/RIGHT button(s) to decrease/increase value and then press SELECT button.

Full screen

Press POINT LEFT/RIGHT button(s) to switch Full screen function to "On" or "Off." Set "On" to resize image with 4 x 3 aspect ratio to fit a screen.

NOTE : Fine sync, Display area, Display area H, Display area V and Full screen can not be adjusted when "RGB", "480p", "575p", "720p (HDTV)", "1035i (HDTV)", "1080i50 (HDTV)" or "1080i60 (HDTV)" is selected on PC SYSTEM Menu (P27).

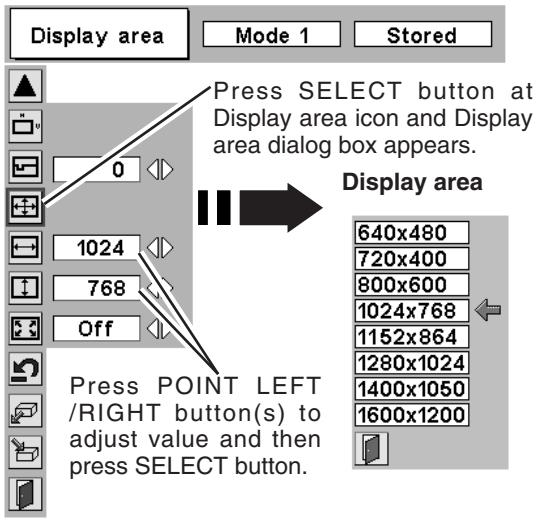

3 **Store**

To store adjustment parameters, move a red frame pointer to Store icon and then press SELECT button. Move a red arrow pointer to any of Mode 1 to 5 that you want to store and then press SELECT button.

Mode free

To clear adjustment parameters previously set, move a red frame pointer to Mode free icon and then SELECT button. Move a red arrow pointer to Mode that you want to clear and then press SELECT button.

Other icons operates as follows.

Reset

Reset all adjust parameters on adjustment dialog box to previous figure.

Quit

Closes PC ADJUST MENU.

To store adjustment data.

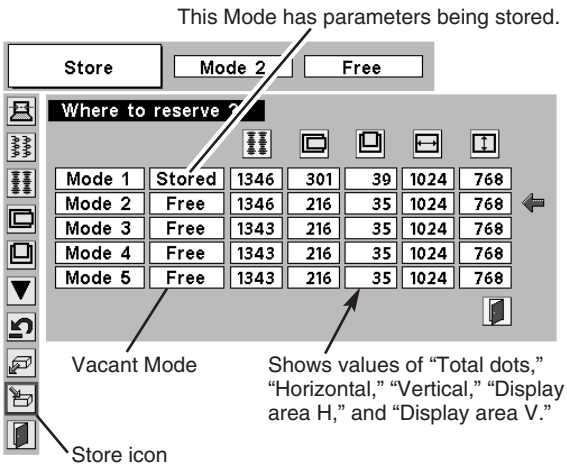

To clear adjustment data.

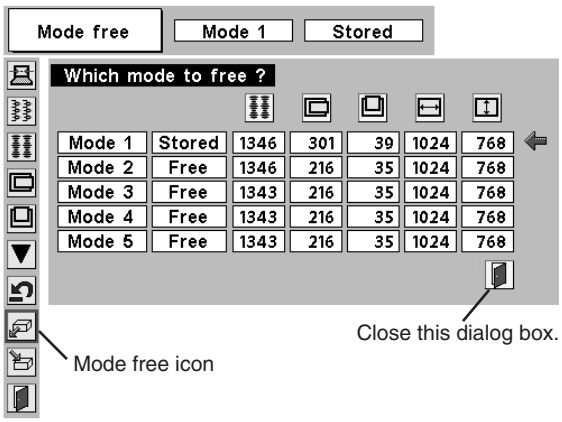

PICTURE IMAGE ADJUSTMENT

IMAGE LEVEL SELECT (DIRECT)

Select image level among Standard, Real, Image 1, Image 2, Image 3 and Image 4 by pressing IMAGE button on Side Control or on Remote Control Unit.

Standard
Normal picture level preset on this projector.

Real
Picture level with improved halftone for graphics.

IMAGE 1~4
User preset picture adjustment in IMAGE ADJUST Menu (P33).

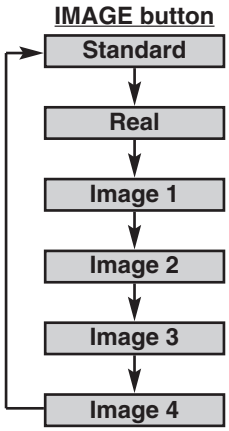

IMAGE LEVEL SELECT (MENU)

1 Press MENU button and ON-SCREEN MENU will appear. Press POINT LEFT/RIGHT button to move a red frame pointer to IMAGE SELECT Menu icon.

2 Press POINT DOWN button to move a red frame pointer to level that you want to set and then press SELECT button.

Standard
Normal picture level preset on this projector.

Real
Picture level with improved halftone for graphics.

IMAGE 1~4
User preset picture adjustment in IMAGE ADJUST Menu (P33).

IMAGE SELECT MENU

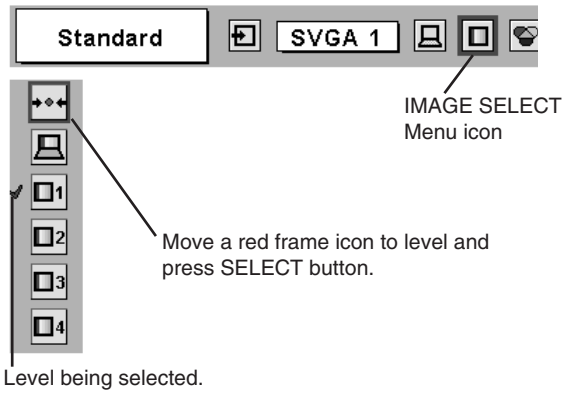

IMAGE LEVEL ADJUSTMENT

1 Press MENU button and ON-SCREEN MENU will appear. Press POINT LEFT/RIGHT buttons to move a red frame pointer to IMAGE ADJUST Menu icon.

2 Press POINT DOWN button to move a red frame pointer to item that you want to adjust and then press SELECT button. Level of each item is displayed. Adjust each level by pressing POINT LEFT/RIGHT button(s).

Contrast

Press POINT LEFT button to decrease contrast, and POINT RIGHT button to increase contrast. (From 0 to 63.)

Brightness

Press POINT LEFT button to adjust image darker, and POINT RIGHT button to adjust brighter. (From 0 to 63.)

Color temp.

Press either POINT LEFT button or POINT RIGHT button to Color temp. level that you want to select. (XLow, Low, Mid or High)

White balance (Red)

Press POINT LEFT button to lighten red tone and POINT RIGHT button to deeper tone. (From 0 to 63.)

White balance (Green)

Press POINT LEFT button to lighten green tone and POINT RIGHT button to deeper tone. (From 0 to 63.)

White balance (Blue)

Press POINT LEFT button to lighten blue tone and POINT RIGHT button to deeper tone. (From 0 to 63.)

Sharpness

Press POINT LEFT button to soften image, and POINT RIGHT button to sharpen image. (From 0 to 15.)

Gamma

Press either POINT LEFT button or POINT RIGHT button to obtain better balance of contrast. (From 0 to 15.)

Noise reduction

Press POINT LEFT/RIGHT button(s) to change noise reduction mode. Dialog box display is changed to “On” to reduce noise (rough parts) of image. Press POINT LEFT/RIGHT button(s) again, to change noise reduction mode to off.

Progressive

Press POINT LEFT/RIGHT button(s) to change progressive scan mode. Dialog box display is changed to “Off” and progressive scan mode to off. Press POINT LEFT/RIGHT button(s) again, progressive scan mode to on.

3 **Store**

To store manually preset image, move a red frame pointer to Store icon and press SELECT button. Image Level Menu will appear. Move a red frame pointer to Image 1 to 4 where you want to set and then press SELECT button.

Other icons operates as follows.

Reset

Reset all adjustment to previous figure.

Quit

Closes IMAGE MENU.

IMAGE ADJUST MENU

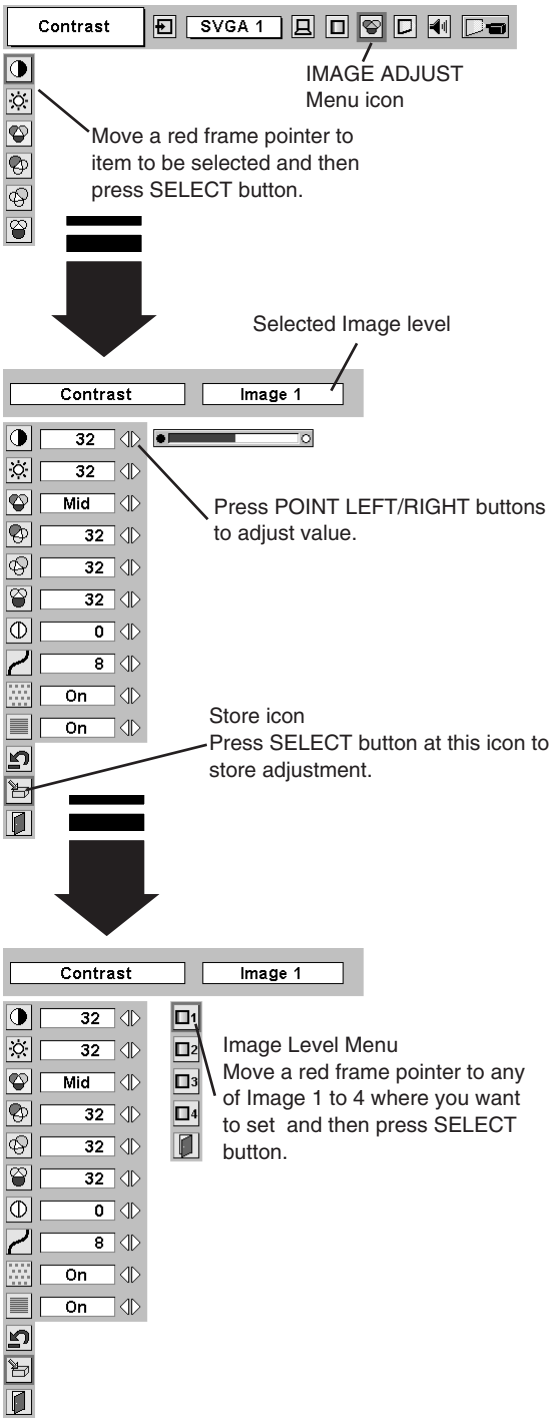

NOTE :

- Noise reduction can be operated when “RGB”, “480p”, “575p”, “720p (HDTV)”, “1035i (HDTV)”, “1080i50 (HDTV)” or “1080i60 (HDTV)” is selected on PC SYSTEM MENU (P27) only.
- Progressive can be operated when “RGB”, “1035i (HDTV)”, “1080i50 (HDTV)” or “1080i60 (HDTV)” is selected on PC SYSTEM MENU (P27) only.

PICTURE SCREEN ADJUSTMENT

This projector has a picture screen resize function, which enables you to display desirable image size.

1 Press MENU button and ON-SCREEN MENU will appear. Press POINT LEFT/RIGHT button(s) to move a red frame pointer to SCREEN Menu icon.

2 Press POINT DOWN button and move a red frame pointer to function that you want to select and then press SELECT button.

Normal

Provides image to fit screen size.

True

Provides image in its original size. When original image size is larger than screen size (1024 x 768), this projector enters “Digital zoom +” mode automatically.

Wide

Provides image to fit wide video aspect ratio (16 : 9) by expanding image width uniformly. This function can be used for providing a squeezed video signal at 16 : 9.

Digital zoom +

When Digital zoom + is selected, ON-SCREEN MENU disappears and message “D. Zoom +” is displayed. Press SELECT button to expand image size. And press POINT UP/DOWN/LEFT/RIGHT button(s) to pan image. Panning function can work only when image is larger than screen size.
A projected image can be also expanded by pressing D.ZOOM ▲ button on Remote Control Unit.

Digital Zoom –

When Digital zoom – is selected, ON-SCREEN MENU disappears and message “D. Zoom –” is displayed. Press SELECT button to compress image size.
A projected image can be also compressed by pressing D.ZOOM ▼ button on Remote Control Unit.

To cancel Digital Zoom +/– mode, press any button except D.ZOOM ▲/▼, SELECT, POINT and AUTO PC ADJ. buttons.

SCREEN MENU

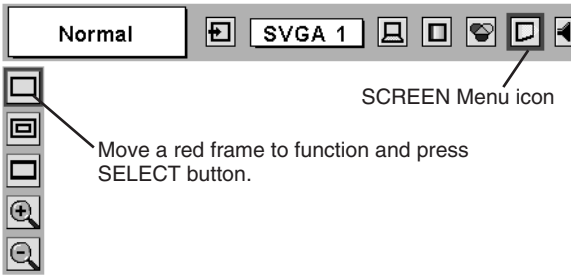

NOTE

- Picture screen adjustment can not be operated when “720p (HDTV)”, “1035i (HDTV)”, “1080i50 (HDTV)” or “1080i60 (HDTV)” is selected on PC SYSTEM Menu (P27).
- True and Digital zoom +/– can not be operated when “RGB”, “480p” or “575p” is selected on PC SYSTEM Menu (P27).
- This projector can not display any resolution higher than 1600 X 1200. If your computer’s screen resolution is higher than 1600 X 1200, reset resolution to lower before connecting projector.
- Image data in other than XGA (1024 x 768) is modified to fit screen size in initial mode.
- Panning function may not operate properly if computer system prepared on PC ADJUST Menu is used.

SELECTING INPUT SOURCE

WHEN SELECT INPUT 2 (5 BNC SLOT)

When connect component video output (Cr, Y, Cb or Pr, Y, Pb) from video equipment to R/Pr, G/Y and B/Pb jacks.

1 Press MENU button and ON-SCREEN MENU will appear. Press POINT LEFT/RIGHT button to move a red frame pointer to INPUT Menu icon.

2 Press POINT DOWN button to move a red arrow pointer to Input 2 and then press SELECT button. Source Select Menu will appear.

3 Press POINT DOWN button and a red-arrow icon will appear. Move arrow to "Y, Pb/Cb, Pr/Cr" and then press SELECT button.

INPUT MENU

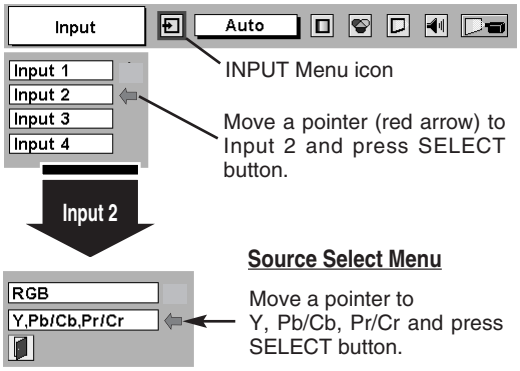

WHEN SELECT INPUT 3 (AV TERMINAL)

When connecting to those equipment, select a type of Video source in SOURCE SELECT (VIDEO) Menu.

1 Press MENU button and ON-SCREEN MENU will appear. Press POINT LEFT/RIGHT button to move a red frame pointer to INPUT Menu icon.

2 Press POINT DOWN button to move a red arrow pointer to Input 3 and then press SELECT button. Source Select Menu will appear.

3 Move a pointer to source that you want to select and then press SELECT button.

INPUT MENU

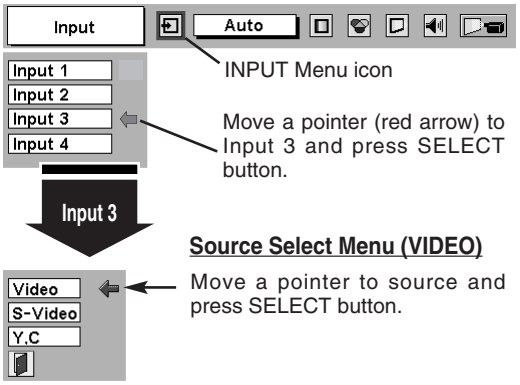

Video When video input signal is connected to VIDEO jack, select Video.

S-Video When video input signal is connected to S-VIDEO jack, select S-Video.

Y, C When video input signal is connected to VIDEO/Y, C jacks, select Y, C.

SELECTING VIDEO SYSTEM

1 Press MENU button and ON-SCREEN MENU will appear. Press POINT LEFT/RIGHT buttons to move a red frame pointer to AV SYSTEM Menu icon.

2 Press POINT DOWN button to move a red arrow pointer to system that you want to select and then press SELECT button.

VIDEO JACK OR S-VIDEO JACK

Auto

Projector automatically detects incoming Video system, and adjusts itself to optimize its performance.
When Video System is PAL-M or PAL-N, select system manually first.

PAL / SECAM / NTSC / NTSC4.43 / PAL-M / PAL-N

If projector can not reproduce proper video image, it is necessary to select a specific broadcast signal format among PAL, SECAM, NTSC, NTSC 4.43, PAL-M, and PAL-N.

AV SYSTEM MENU (VIDEO OR S-VIDEO)

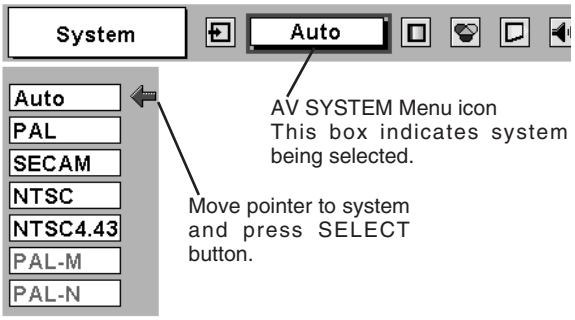

Y, Pb/Cb, Pr/Cr JACKS

Auto

Projector automatically detects incoming Video signal, and adjusts itself to optimize its performance.
When Video System is 1035i, 1080i50 or 1080i60, select system manually first.

COMPONENT VIDEO SIGNAL FORMAT

If projector can not reproduce proper video image, it is necessary to select a specific component video signal format among 480i, 575i, 480p, 575p, 720p, 1035i , 1080i50 or 1080i60.

AV SYSTEM MENU (COMPONENT VIDEO)

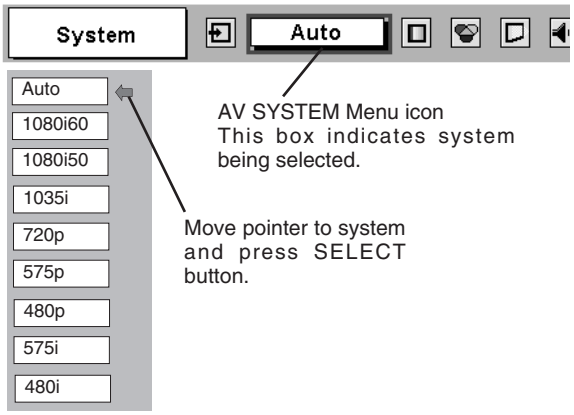

PICTURE IMAGE ADJUSTMENT

IMAGE LEVEL SELECT (DIRECT)

Select image level among Standard, Cinema, Image 1, Image 2, Image 3 and Image 4 by pressing IMAGE button on Side Control or on Remote Control Unit.

Standard
Normal picture level preset on this projector.

Cinema
Picture level adjusted for picture with fine tone.

IMAGE 1~4
User preset picture adjustment in IMAGE ADJUST Menu (P39).

IMAGE LEVEL SELECT (MENU)

1 Press MENU button and ON-SCREEN MENU will appear. Press POINT LEFT/RIGHT button to move a red frame pointer to IMAGE SELECT Menu icon.

2 Press POINT DOWN button to move a red frame pointer to level that you want to set and then press SELECT button.

Standard
Normal picture level preset on this projector.

Cinema
Picture level adjusted for picture with fine tone.

IMAGE 1~4
User preset picture adjustment in IMAGE ADJUST Menu (P39).

IMAGE SELECT MENU

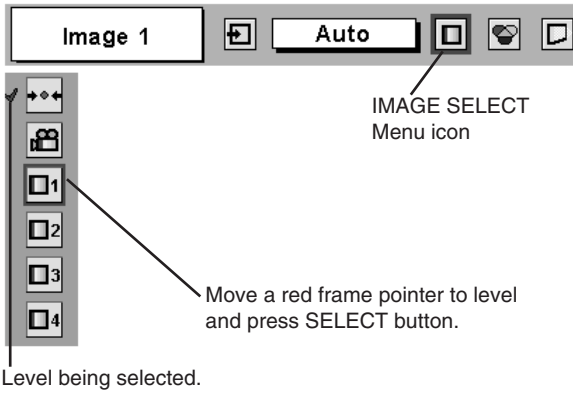

IMAGE LEVEL ADJUSTMENT

1 Press MENU button and ON-SCREEN MENU will appear. Press POINT LEFT/RIGHT button(s) to move a red frame pointer to IMAGE ADJUST Menu icon.

2 Press POINT DOWN button to move a red frame pointer to item that you want to adjust and then press SELECT button. Level of each item is displayed. Adjust each level by pressing POINT LEFT/RIGHT button(s).

Contrast

Press POINT LEFT button to decrease contrast, and POINT RIGHT button to increase contrast. (From 0 to 63.)

Brightness

Press POINT LEFT button to adjust image darker, and POINT RIGHT button to adjust brighter. (From 0 to 63.)

Color

Press POINT LEFT button to lighten color, and POINT RIGHT button to deeper color. (From 0 to 63.)

Tint

Press POINT LEFT button or POINT RIGHT button to obtain proper color. (From 0 to 63.)

Color temp.

Press either POINT LEFT button or POINT RIGHT button to Color temp. level that you want to select. (XLow, Low, Mid or High)

White balance (Red)

Press POINT LEFT button to lighten red tone and POINT RIGHT button to deeper tone. (From 0 to 63.)

White balance (Green)

Press POINT LEFT button to lighten green tone and POINT RIGHT button to deeper tone. (From 0 to 63.)

White balance (Blue)

Press POINT LEFT button to lighten blue tone and POINT RIGHT button to deeper tone. (From 0 to 63.)

Sharpness

Press POINT LEFT button to soften image, and POINT RIGHT button to sharpen image. (From 0 to 15.)

Gamma

Press either POINT LEFT button or POINT RIGHT button to obtain better balance of contrast. (From 0 to 15.)

Noise reduction

Press POINT LEFT/RIGHT button(s) to change noise reduction mode. Dialog box display is changed to “On” to reduce noise (rough parts) of image. Press POINT LEFT/RIGHT button(s) again, to change noise reduction mode to off.

Progressive scan

Press POINT LEFT/RIGHT button(s) to change progressive scan mode. Dialog box display is changed to “Off” and progressive scan mode to off. Press POINT LEFT/RIGHT button(s) again, progressive scan mode to on.

IMAGE ADJUST MENU

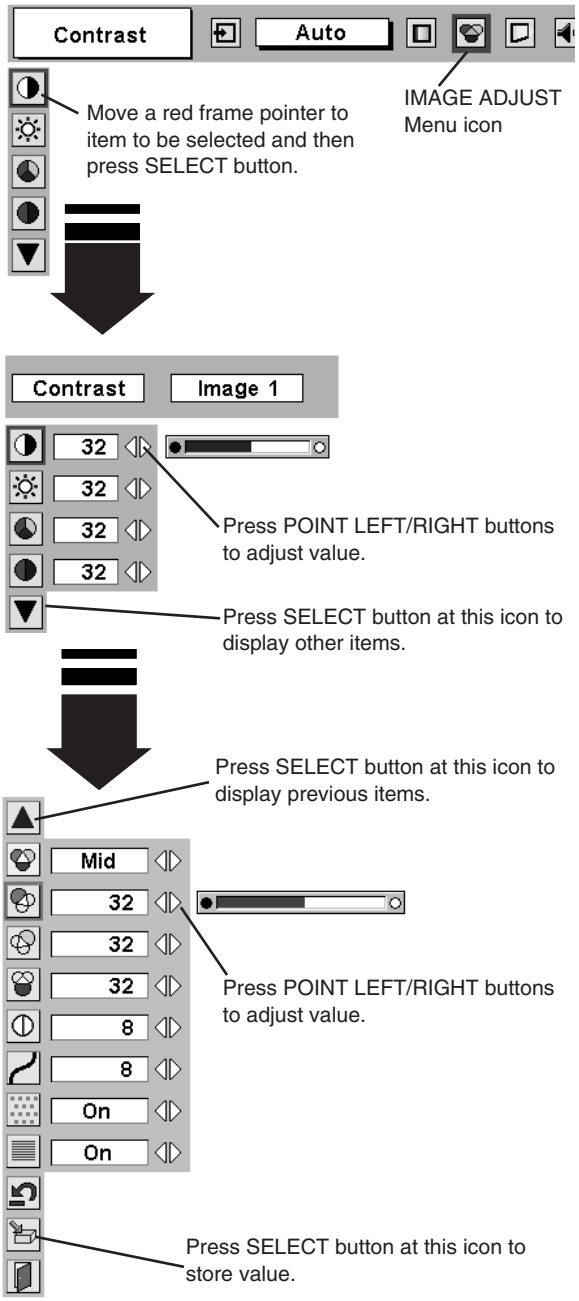

NOTE :

Tint can not be adjusted when video system is PAL, SECAM, PAL-M or PAL-N.

Progressive can not be operated when “480p”, “575p” or “720p” is selected on AV SYSTEM MENU (P36).

3 **Store**

To store adjustment data, move a red frame pointer to Store icon and press SELECT button. Image Level Menu will appear. Move a red frame pointer to Image Level 1 to 4 and then press SELECT button.

Other icons operates as follows.

Reset

Reset all adjustment to previous figure.

Quit

Closes IMAGE MENU.

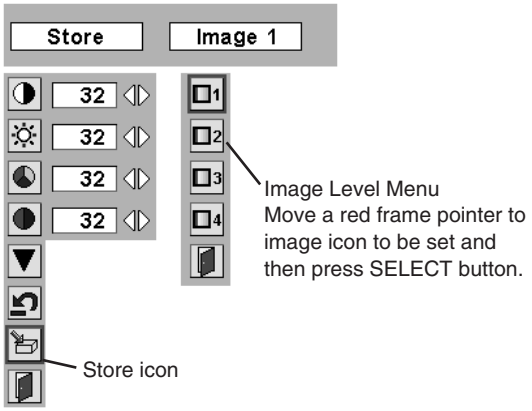

PICTURE SCREEN ADJUSTMENT

This projector has a picture screen resize function, which enables you to display desirable image size.

1 Press MENU button and ON-SCREEN MENU will appear. Press POINT LEFT/RIGHT button(s) to move a red frame pointer to SCREEN Menu icon.

2 Press POINT DOWN button and move a red frame pointer to function that you want to select and then press SELECT button.

Normal

Provides image at a normal video aspect ratio of 4 : 3.

Wide

Provides image at a wide screen ratio of 16 : 9.

SCREEN MENU

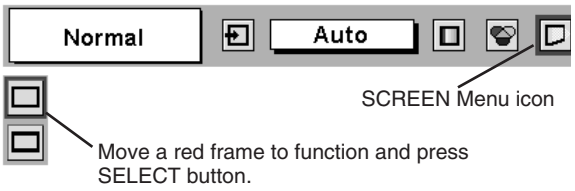

NOTE : SCREEN Menu can not be operated when “720p”, “1035i”, “1080i50” or “1080i60” is selected on AV SYSTEM Menu (P36).

SETTING MENU

1 Press MENU button and ON-SCREEN MENU will appear. Press POINT LEFT/RIGHT button(s) to move a red-frame pointer to SETTING icon.

2 Press POINT DOWN button to move a red-frame pointer to item that you want to set and then press SELECT button. Setting dialog box appears.

Language

Language used in ON-SCREEN MENU is selectable from among English, German, French, Italian, Spanish, Portuguese, Dutch, Swedish, Chinese, Korean and Japanese.

Keystone

When image is distorted vertically, select Keystone. ON-SCREEN MENU disappears and Keystone dialog box is displayed.
Correct keystone distortion by pressing POINT UP/DOWN button(s). Refer to KEYSTONE ADJUSTMENT on page 23.

Blue back

When this function is “On,” this projector will produce a blue image instead of video noise on screen when any input source is unplugged or turned off.

Display

This function decides whether to display On-Screen Displays.

On ··· shows all On-Screen Displays.
Off ···· sets On-Screen Displays disappeared except;
- ON-SCREEN MENU
- “Power off?” message

Logo

When this function is “On,” projector displays our logo when starting up.

Ceiling

When this function is “On,” picture is top/bottom and left/right reversed. This function is used to project image from a ceiling mounted projector.

Rear

When this function is “On,” picture is left/right reversed. This function is used to project image to a rear projection screen.

SETTING MENU

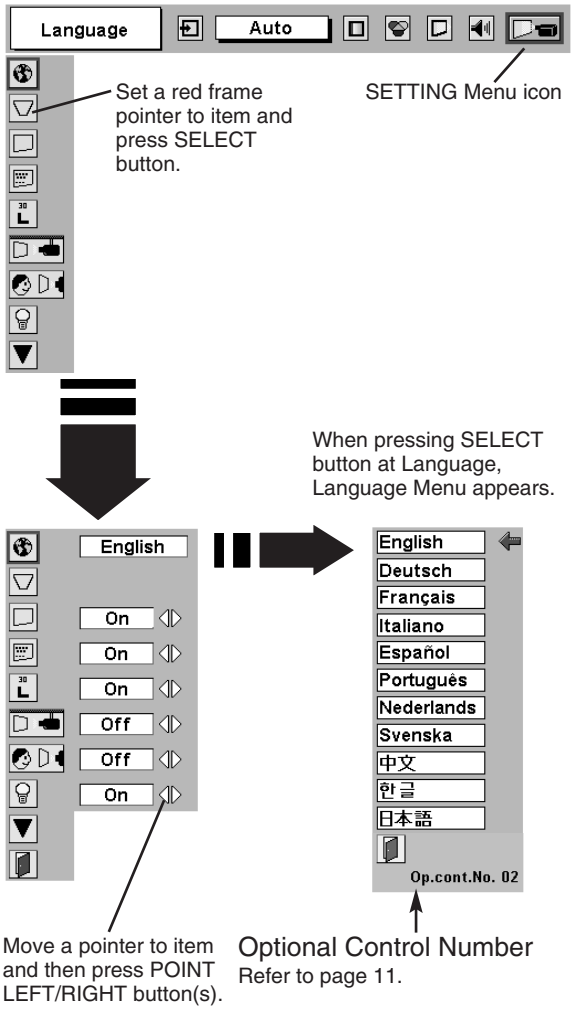

Ceiling function

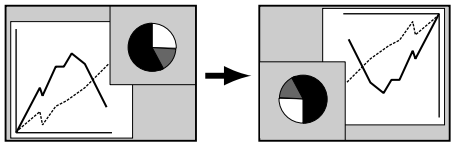

Rear function

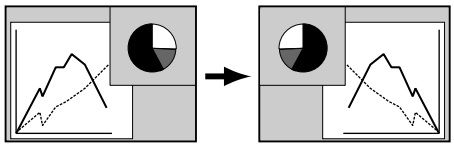

Power management

This function turns Projection Lamp off when this projector detects signal interruption and is not used for a certain period in order to reduce power consumption and maintain Lamp-life. (This projector is shipped with this function ON.)

Power Management function operates to turn Projection Lamp off when input signal is interrupted and any button is not pressed over 5 minutes. This function operates as follows;

1. When any input signal is interrupted, “No signal” and counting down display appears (for 5 minutes).
2. After counting down for 5 minutes, projector lamp and READY indicator are turned off.
3. When READY indicator flashing, Projection Lamp can be turned on again (Power Management mode).
   In this Power Management mode, Projection Lamp is automatically turned on when input signal connected or projector is operated with any button on Side Control or on Remote Control Unit again.

Time left until Lamp off.

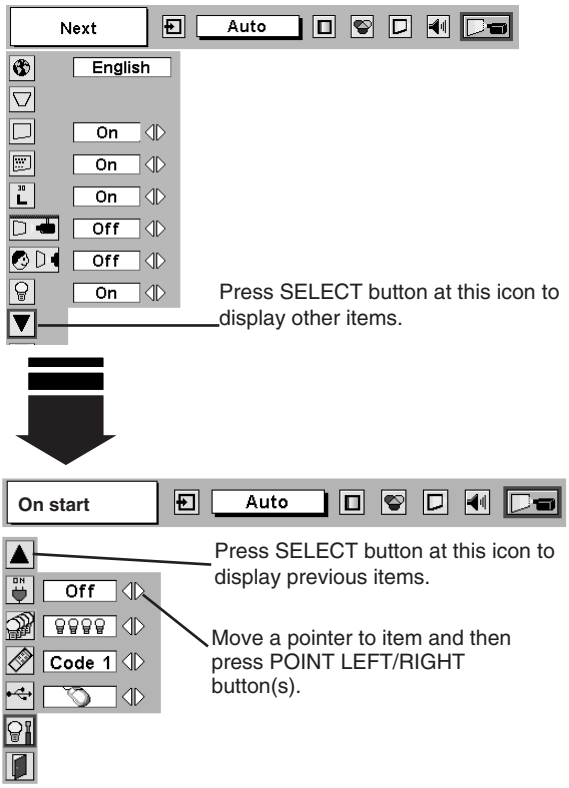

On start

When this function is “On,” projector is automatically turned on just by switching MAIN ON/OFF SWITCH on.

Note ; Be sure to turn projector off properly (refer to section “TURNING OFF PROJECTOR” on P22). If projector is turned off in wrong steps, On Start function does not operate properly.

Lamp Mode

This Projector is equipped with 4 Projection Lamps and a number of using lamps can be switched to 4 lamps or 2 lamps. Using 2 lamps maintain life of Projection Lamps.

To change over Lamp Mode

1. Press MENU button and ON-SCREEN MENU will appear. Press POINT LEFT/RIGHT buttons to select SETTING and press SELECT button. Setting dialog box appears.
2. Press POINT DOWN button to move a red frame pointer to “Lamp mode”. Set "4 lamps mode" or "2 lamps mode" by pressing POINT LEFT/RIGHT button(s). When Lamp Mode is set from "4 lamps mode" to "2 lamps mode" image becomes little darker. When Lamp Mode is set from "2 lamps mode" to "4 lamps mode" image become brighter gradually.

NOTE : After changing Lamp Mode, it can not be switched again for 90 seconds.

Remote control

This projector has two different remote control codes; factory-set normal code (Code 1) and secondary code (Code 2). This switching function prevents remote control operation mixture (jam) when operating several projectors or video equipment together.
When operating projector in “Code 2,” both projector and Remote Control Unit must be switched to “Code 2.”

To change code of Projector;

Set Remote control in SETTING MENU to “Code 2.”

To change code of Remote Control Unit;

Press both MENU and IMAGE buttons on Remote Control Unit together for over 10 seconds.

After changing code, make sure Remote Control operates properly.
To return to normal code (Code 1), operate both projector and Remote Control in ways above again.

NOTE : When batteries of Remote Control Unit are replaced or ALL-OFF switch is turned to “ALL-OFF,” remote transmit code automatically returns to normal code (Code 1).

USB

This Projector is equipped with USB port for interactive operation between a projector and computer. Set mode following steps below.

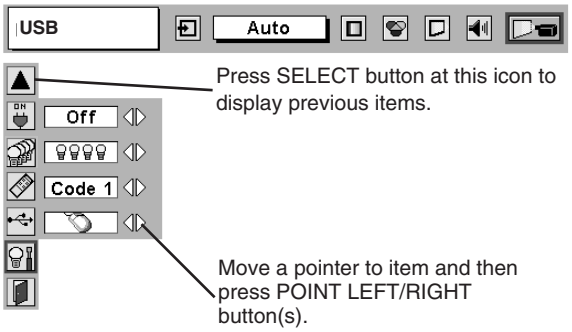

Wireless Mouse mode

Select " " when controlling a computer with Remote Control of this projector.

Projector mode

Select " " when controlling a projector with computer.

NOTE: Before you control a projector by computer, install USB driver (optionally sold parts) and set up computer following instruction in USB driver package. Contact your authorized dealer.

Lamp counter reset

Be sure to reset Lamp Counter when Lamp Assembly is replaced. When Lamp Replace Counter is reset, LAMP REPLACE indicator stops lighting.

1 Turn projector on, press MENU button and ON-SCREEN MENU will appear. Press POINT LEFT/RIGHT button(s) to move a red frame pointer to SETTING Menu icon.

2 Press POINT DOWN button to move a red frame pointer to “Lamp counter reset” and then press SELECT button.

3 Move arrow to replaced lamp number (Lamp 1, Lamp 2, Lamp 3 or Lamp 4) and then press SELECT button. Message "Lamp replace counter Reset?" is displayed. Move pointer to [Yes] and then press SELECT button.

NOTE: Be sure to reset correct lamp number otherwise LAMP REPLACE indicator continues lighting.

4 Another confirmation dialog box appears and select [Yes] to reset Lamp Replace Counter.

Do not reset Lamp Replace Counter except after Projection lamp is replaced.

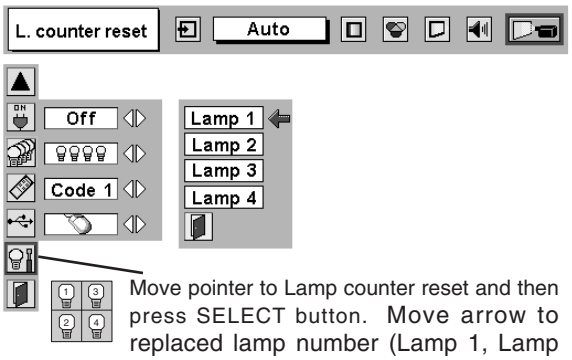

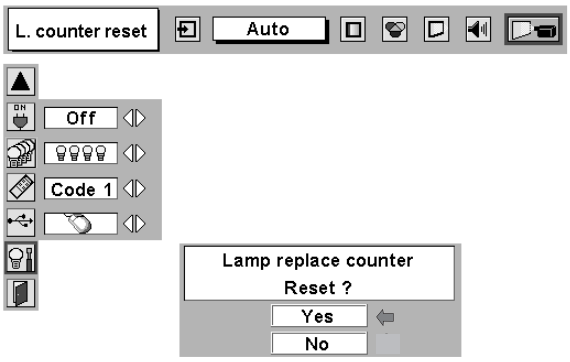

Message "Lamp replace counter Reset?" is displayed. Move pointer to [Yes] and then press SELECT button.

Quit

Closes SETTING MENU.

OPERATING WIRELESS MOUSE

Wireless Remote Control Unit is not only able to operate this projector but also usable as a wireless mouse for most Personal Computers. POINT buttons and two CLICK buttons are used for wireless mouse operation.
This Wireless Mouse function is available only when PC mouse pointer is displayed on a projected screen. When ON-SCREEN MENU or any message / dialog box is displayed on screen instead of PC mouse pointer, this Wireless Mouse function can not be used.

INSTALLATION

To use Wireless Remote Control Unit as Wireless Mouse for a Personal Computer, installation of mouse driver (not supplied) is required. Make sure that mouse driver is properly installed in your computer. And make sure that mouse port (or USB port) of a Personal Computer is activated.

1. Connect mouse port (or USB port) of your computer to Control Port (or USB connector) of this projector with Control Cable (or USB cable). (Refer to page 13, 14 for connection.)
2. Turn a projector on first, and then turn on your computer. When computer is switched on first, Wireless Mouse may not work properly.

Note : When your computer has no mouse port, connect Serial Port of your computer to Control Port of a projector with Control Cable for Serial Port (not supplied).

OPERATING WIRELESS MOUSE

When controlling a PC mouse pointer, operate Wireless Mouse with POINT button, SELECT button, and RIGHT CLICK button on Wireless Remote Control Unit.

POINT button

Used to move PC mouse pointer. Pointer is moved corresponding with direction you are pressing.

SELECT (LEFT CLICK) button

This button has same function as left button in a PC mouse.

RIGHT CLICK button

This button has same function as right button in a PC mouse. This button is not available for controlling this projector.

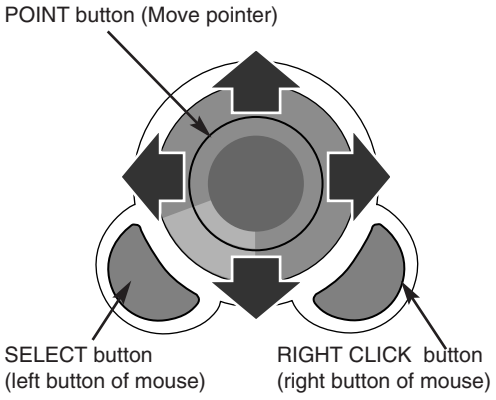

MAINTENANCE

WARNING TEMP. INDICATOR

WARNING TEMP. Indicator flashes red and projector is automatically turned off when an internal temperature of a projector exceeds normal temperature. Wait at least 5 minutes before turning on projector again.
When WARNING TEMP. Indicator continues to flash, check items listed below.

1. Ventilation Slots of a projector may be blocked. In such an event, reposition a projector so that Ventilation Slots are not obstructed.
2. Air Filter may be clogged with dust particles. Clean Air Filter by following section AIR FILTER CARE AND CLEANING on next page.
3. If WARNING TEMP. Indicator remains on after performing above checks, Cooling Fans or Internal Circuits may be malfunctioning. Contact service personnel from an authorized dealer or a service station.

AIR FILTER CARE AND CLEANING

Air Filter prevents dust from accumulating on surface of Projection Lens and Projection Mirror. Should Air Filter become clogged with dust particles, it will reduce Cooling Fans' effectiveness and may result in internal heat build up and adversely affect life of a projector.
Clean Air Filter following steps below:

1. Turn power off, and disconnect AC power cord from AC outlet.
2. Pull out air filter from a projector.
3. Pulling up center frame of air filter top, separate air filter top and sheet from air filter base.
4. Clean each parts with brush or wash out dust and particles. Be sure to dry them out.
5. Assemble sheet and air filter and replace air filter to a projector.

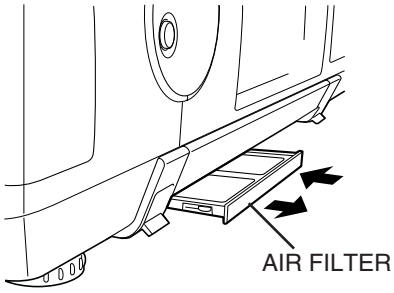

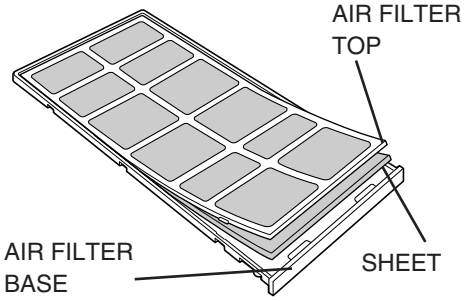

CAUTION
Do not operate a projector with Air Filter removed. Dust may accumulate on LCD Panel and Mirror degrading picture quality.
Do not put small parts into Air Intake Vents. It may result in malfunction of a projector.

RECOMMENDATION

We recommend avoiding dusty/smoky environments when operating a projector. Usage in these environments may cause poor image quality.

When using under dusty or smoky conditions, dust may accumulate on liquid crystal panel, lens, or optical elements inside it. This condition may degrade quality of projected image.
When above symptoms are noticed, contact your authorized dealer or service station for proper cleaning.

CLEANING PROJECTION LENS

Follow these steps to clean projection lens:

1. Apply a non-abrasive camera lens cleaner to a soft, dry cleaning cloth. Avoid using an excessive amount of cleaner. Abrasive cleaners, solvents or other harsh chemicals might scratch lens.
2. Lightly wipe cleaning cloth over lens.
3. When a projector is not in use, replace lens cover.

LAMP MANAGEMENT

This Projector is equipped with 4 Projection Lamps to ensure brighter image and those lamps are controlled by Lamp Management Function. Lamp Management Function detects status of all lamps and shows status on screen or on LAMP REPLACE indicator. This function also automatically controls Lamp Mode when any of lamps is out for end of life or malfunctions.

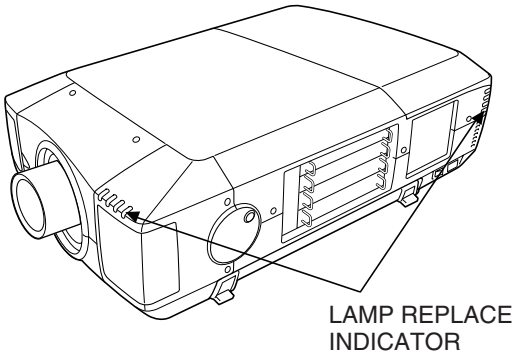

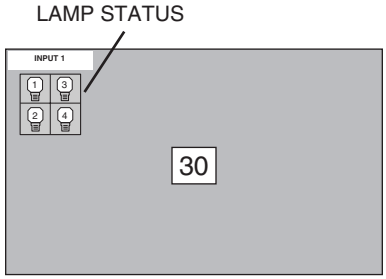

Lamp Replace Indicator

This LAMP REPLACE indicator lights yellow when any of Projection Lamps is nearing its end, and flashes when any of them becomes out. Check number of lamp on Lamp Status Display and replace lamp.

Lamp Status Display

Lamp Status Display appears on screen when power switch is on or changed input position (input 1, input 2, Input 3 or input 4). This shows status of each lamp as; ON, OFF, NEAR END, or OUT. Refer to following for each status.

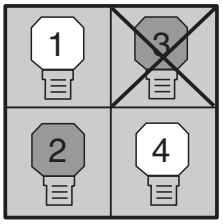

LAMP STATUS DISPLAY

Yellow Lamp ---------- Projection Lamp lights normally.

Dim Lamp ---------- Projection Lamp is turned off.

Red Lamp ---------- Projection Lamp is nearing its end. When image becomes darker or color becomes unnatural, replace lamp. (LAMP REPLACE indicator lights yellow.)

X Mark on Lamp ------- (LAMP REPLACE indicator flashes yellow.)
Projection lamp is defective or fails to be turned on. Restart a projector on, and make sure lamp is on. If this mark still appears, replace lamp corresponding with number marked X.

Lamp Mode Changeover

Lamp Management Function automatically changes combination of lighting lamp (Lamp Mode) by detecting status of lamp. When any of 4 lamps becomes out, Lamp Mode is changed over from 4 lamps to 2 lamps. And when any of 2 lamps are out, a projector operates with 1 lamp. Lamp Mode can be switched to 4 lamps or 2 lamps manually. Refer to SETTING section on page 40, 41.

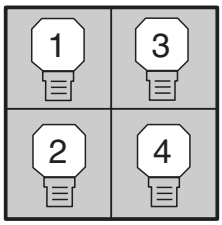

4 LAMP MODE

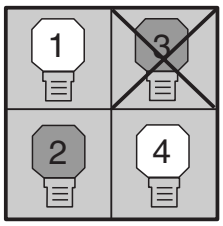

2 LAMP MODE
(Example)

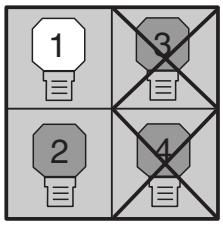

1 LAMP MODE
(Example)

LAMP REPLACEMENT

When the life of the Projection Lamp of this projector draws to an end, the LAMP REPLACE indicator lights yellow. If this indicator lights yellow, replace the projection lamp with a new one promptly.

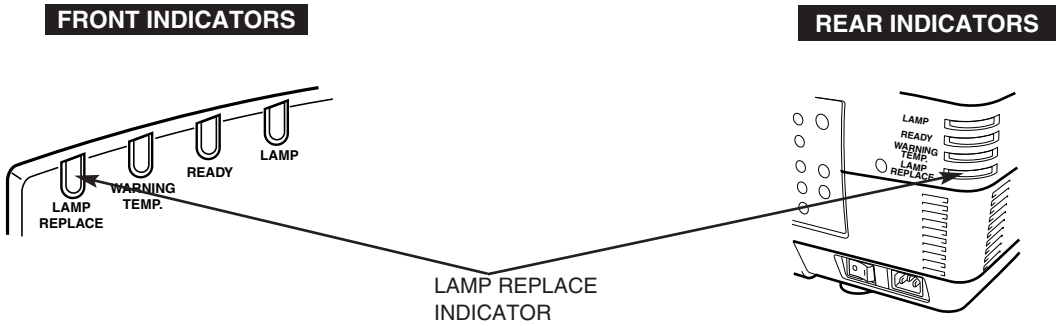

Allow a projector to cool, for at least 45 minutes before you open Lamp Cover. The inside of a projector can become very hot.

⚠ CAUTION

For continued safety, replace with a lamp assembly of the same type.
Do not drop a lamp assembly or touch a glass bulb! The glass can shatter and may cause injury.

Follow these steps to replace lamp assembly.

1. Check number of lamp to be replaced on Lamp Status Display.
2. Turn off a projector and disconnect AC Power Cord. Allow a projector to cool down for at least 45 minutes.
3. Remove two screws on Lamp Cover and press button to open Lamp Cover. (See right figure.)
4. Loosen two screws and pull out Lamp Assembly to be replaced by grasping handle.
5. Replace Lamp Assembly with a new one and tighten two screws. Make sure Lamp is set properly
6. Replace Lamp Cover and tighten two screws.
7. Connect AC Power Cord to a projector and turn a projector on.
8. Reset Lamp Replacement Counter. (Refer to section "Lamp Counter Reset" on page 42.)

NOTE : Do not reset LAMP REPLACEMENT COUNTER when lamp is not replaced.

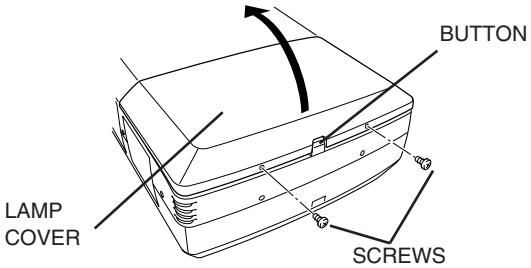

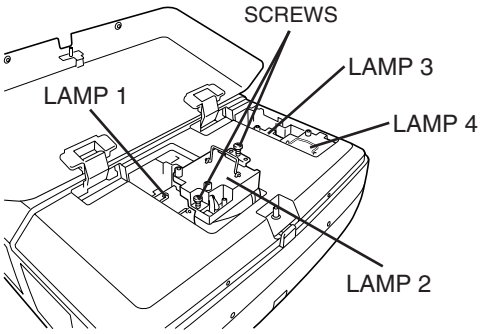

Make sure which number of lamp needs to be replaced on Lamp Status Display.
Figure shows case of replacing LAMP 2.

CAUTION : DO NOT OPERATE A PROJECTOR WHILE ANY OF LAMPS IS REMOVED. IT MAY RESULT IN MALFUNCTIONS, FIRE HAZARD, OR OTHER ACCIDENTS.

NOTES ON LAMP REPLACEMENT

To maintain quality of picture (better balance of color and brightness in entire screen), we recommend replacing all 4 lamps at a time.

ORDER REPLACEMENT LAMP

Replacement Lamp can be ordered through your dealer. When ordering a Projection Lamp, give the following information to the dealer.

- **Model No. of your projector : 38-VIV402-01**
- **Replacement Lamp Type No. : 03-000709-01P**
  (Service Parts No. 610 300 0862)

LAMP HANDLING PRECAUTIONS

This projector uses a high-pressure lamp which must be handled carefully and properly. Improper handling may result in accidents, injury, or create a fire hazard.

- Lamp lifetime may differ from lamp to lamp and according to the environment of use. There is no guarantee of the same lifetime for each lamp. Some lamps may fail or terminate their lifetime in a shorter period of time than other similar lamps.

- If the projector indicates that the lamp should be replaced, i.e., if the LAMP REPLACE INDICATOR lights up, replace the lamp with a new one IMMEDIATELY after the projector has cooled down.
  (Follow carefully the instructions in the LAMP REPLACEMENT section of this manual.) Continuous use of the lamp with the LAMP REPLACE INDICATOR lighted may increase the risk of lamp explosion.

- A Lamp may explode as a result of vibration, shock or degradation as a result of hours of use as its lifetime draws to an end. Risk of explosion may differ according to the environment or conditions in which the projector and lamp are being used.

IF A LAMP EXPLODES, THE FOLLOWING SAFETY PRECAUTIONS SHOULD BE TAKEN.

If a lamp explodes, disconnect the projector's AC plug from the AC outlet immediately. Contact an authorized service station for a checkup of the unit and replacement of the lamp. Additionally, check carefully to ensure that there are no broken shards or pieces of glass around the projector or coming out from the cooling air circulation holes. Any broken shards found should be cleaned up carefully. No one should check the inside of the projector except those who are authorized trained technicians and who are familiar with projector service. Inappropriate attempts to service the unit by anyone, especially those who are not appropriately trained to do so, may result in an accident or injury caused by pieces of broken glass.

TROUBLESHOOTING

Before calling your dealer or service center for assistance, check matters below once again.

1. Make sure you have connected a projector to your computer or video equipment as described in section "CONNECTING PROJECTOR" on pages 12 ~ 15.
2. Check cable connection. Verify that all computer, video and power cord are properly connected.
3. Verify that all power is switched on.
4. If a projector still does not produce an image, re-start your computer.
5. If an image still does not appear, unplug a projector from your computer and check your computer monitor's display.Problem may be with your graphics controller rather than with a projector. (When you reconnect a projector, be sure to turn a computer and monitor off before you power up a projector. Power equipment back on in order of : Projector and computer.)
6. If problem still exists, check following chart.

Problem:	Try these Solutions
No power.	● Plug a projector into your AC outlet. ● Turn MAIN ON/OFF switch to ON. ● Press POWER ON/OFF switch to ON. ● Make sure READY Indicator lights. ● Wait 90 seconds after a projector is turned OFF when turning a projector back on. NOTE : After pressing Power ON-OFF button to OFF, make sure a projector works as follows: 1. LAMP indicator lights bright and READY indicator turns off. 2. After 90 seconds, READY indicator lights green again and a projector may be turned on by pressing Power ON-OFF button. ● Check WARNING TEMP. and READY indicator. If both WARNING TEMP. and READY indicator flashes, a projector can not be turned on. (See "TURNING ON/OFF PROJECTOR" section on page 22.) ● Check Projection Lamp. (Refer to page 46.)
Image is out of focus.	● Adjust focus of a projector. ● Check Projection Lens to see if it needs cleaning. NOTE : Moving a projector from a cool temperature location to a warm temperature location may result in moisture condensation on Projection Lens. In such an event, leave a projector OFF and wait until condensation disappears.
Picture is Left/Right reversed.	● Check Ceiling / Rear feature. (See “SETTING” section on page 40.)
Picture is Top/Bottom reversed.	● Check Ceiling feature. (See “SETTING” section on page 40.)
Some displays are not seen during Operation.	● Check Display feature.(See “SETTING” section on page 40.)
No image.	● Check connection between your computer or video equipment and a projector. ● When turning a projector on, it takes about 30 seconds to display an image. ● Check system that you select is corresponding with your computer or video equipment. ● Make sure temperature is not out of Operating Temperature (5°C ~ 35°C).
No sound.	● Check audio cable connection from audio input source. ● Adjust audio source. ● Press VOLUME (+) button. ● Press MUTE button.

Problem:	Try these Solutions
Remote Control Unit does not work.	● Check batteries. ● Check ALL-OFF switch on Remote Control Unit is set to “ON.”. ● Make sure nothing is between Infrared Remote Receiver and Remote Control Unit. ● Make sure you are not too far from a projector when using Remote Control Unit. Maximum operating range is 16.4’ (5m). ● Check transmitted signal mode from Remote Control Unit. (See “SETTING” section on page 40.)
Wireless Mouse function does not work.	● Check cable connection between a projector and your computer. ● Check mouse setting on your computer. ● Turn a projector on before turning on a computer.

SERVICE

WARNING: High voltages are used to operate this projector. Do not attempt to open cabinet.

You can often correct operating problems yourself. If a projector fails to work properly, see "TROUBLESHOOTING" section on page 48, 49. To correct failure, try "Solutions".

If after following all operating instructions, you find that service is necessary, contact Christie Service Station or store where you purchased unit.
Give model number and explain difficulty. We will advise you how to obtain service.

This symbol on the nameplate means the product is Listed by Underwriters Laboratories Inc. It is designed and manufactured to meet rigid U.L. safety standards against risk of fire, casualty and electrical hazards.

The CE Mark is a Directive conformity mark of the European Community (EC).

TECHNICAL SPECIFICATIONS

Projector Type	Multi-media Projector
Dimensions (W x H x D)	22.9" x 10" x 30.9" (581 mm x 252 mm x 783 mm)
Net Weight	81.7 lbs (37 kg)
LCD Panel System	1.8" TFT Active Matrix type, 3 panels
Panel Resolution	1024 x 768 dots
Number of Pixels	2,359,296 (1024 x 768 x 3 panels)
Color System	PAL, SECAM, NTSC, NTSC4.43, PAL-M and PAL-N
High Definition TV Signal	480i, 480p, 575i, 575p, 720p, 1035i, 1080i-50 and 1080i-60
Motorized Lens Shift	Up, Down, Left and Right
Scanning Frequency	H-sync. 15 ~ 120 KHz, V-sync. 50 ~ 120 Hz
Horizontal Resolution	800 TV lines
Projection Lamp	250 watt type x 4
Input 1 Jacks	DVI-I Terminal (Digital/Analog), RCA Type (Audio R and L) and DIN 8-pin (Control port)
Input 2 Jacks	BNC Type x 5 (R/Pr, G/Y, B/Pb, H/HV and V), RCA Type (Audio R and L) and DIN 8-pin (Control port)
Input 3 Jacks	BNC Type x 2 (VIDEO/Y, C), RCA Type (Audio R and L) and DIN 4-pin (S-Video)
Input 4 Jacks	HDB 15-pin Terminal (Analog), RCA Type (Audio R and L) and DIN 8-pin (Control port)
Other Jacks	Serial port in (DB 9), Serial port out (DB 9), USB port, Audio Monitor out (RCA Type R and L) and Wired Remote Jack
Built-in Speakers	INT. SP. Stereo (R and L), 3 watt RMS (T.H.D. 10%)
Feet Adjustment	0˚ to 5.7˚
Voltage and Power Consumption	AC 120 V (12 A Max. Ampere), 50 / 60 Hz (The U.S.A and Canada) AC 200 ~ 240 V (7.5 A Max. Ampere), 50 / 60 Hz (Continental Europe)
Operating Temperature	41 ˚F ~ 95 ˚F (5 ˚C ~ 35 ˚C)
Storage Temperature	14 ˚F ~ 140 ˚F (-10 ˚C ~ 60 ˚C)
Remote Control Transmitter	Power Source : AA, UM3 or R06 Type x 2 Operating Range : 16.4' (5m) / ±30˚ Dimensions : 2.2" x 1.3" x 7.6" (55mm x 34mm x 192mm) Net Weight : 0.36 lbs (165 g) (including batteries) Laser Pointer : Class II Laser (Max. Output : 1mW / Wave length : 650±20nm)
Accessories	User's Manual AC Power Cord Wireless/Wired Remote Control Transmitter and Batteries Remote Control Cable VGA Cable and DVI Cable MAC/VGA Adapter and DVI/VGA Adapter 3 Types Control Cable (For PS/2, Serial and ADB port) 6 Types Light-Block Sheet (For option lens) Lens Attachment (For option lens) Protective Dust Cover

- Specifications are subject to change without notice.
- LCD panels are manufactured to the highest possible standards. At least 99.99% of the pixels are effective, however a tiny fraction of the pixels (0.01% or less) may be ineffective by the characteristics of the LCD panels.

CONFIGURATIONS OF TERMINALS

DVI-I TERMINAL (DIGITAL/ANALOG)

This terminal accepts only Digital (TMDS) or Analog (RGB) output signal. Connect display output terminal of computer to this terminal with DVI cable (supplied).

Pin Configuration

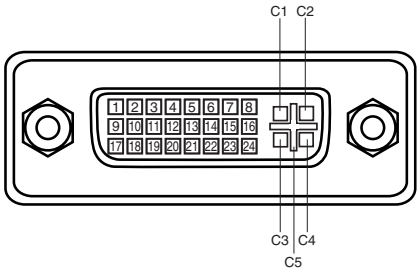

C1	Analog Red Input
C2	Analog Green Input
C3	Analog Blue Input
C4	Analog Horiz. sync
C5	Analog Ground (R/G/B)

1	T.M.D.S. Data2–	**9**	T.M.D.S. Data1–	**17**	T.M.D.S. Data0–
2	T.M.D.S. Data2+	**10**	T.M.D.S. Data1+	**18**	T.M.D.S. Data0+
3	T.M.D.S. Data2 Shield	**11**	T.M.D.S. Data1 Shield	**19**	T.M.D.S. Data0 Shield
4	No Connect	**12**	No Connect	**20**	No Connect
5	No Connect	**13**	No Connect	**21**	No Connect
6	DDC Clock	**14**	+5V Power	**22**	T.M.D.S. Clock Shield
7	DDC Data	**15**	Ground (for +5V)	**23**	T.M.D.S. Clock+
8	Analog Vert. sync	**16**	Hot Plug Detect	**24**	T.M.D.S. Clock–

HDB 15-PIN TERMINAL (ANALOG)

Connect display output terminal of computer to this terminal with VGA Cable (supplied).

- When connecting Macintosh computer, use MAC/VGA Adapter (supplied).
- When connecting Analog signal from DVI terminal of computer to this terminal, use DVI/VGA Adapter (supplied).

Pin Configuration

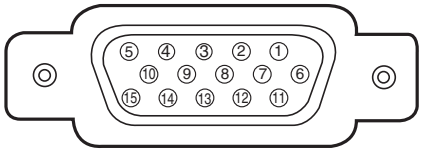

1	Red Input	**9**	+5V Power
2	Green Input	**10**	Ground (Vert.sync.)
3	Blue Input	**11**	Sense 0
4	Sense 2	**12**	DDC Data
5	Ground (Horiz.sync.)	**13**	Horiz. sync.
6	Ground (Red)	**14**	Vert. sync.
7	Ground (Green)	**15**	DDC Clock
8	Ground (Blue)		

CONTROL PORT CONNECTOR

Terminal : Mini DIN 8-PIN

Connect control port (PS/2, Serial or ADB port) on your computer to this terminal with Control Cable (supplied).

Pin Configuration

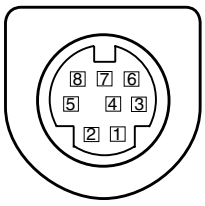

	PS/2	Serial	ADB
1	-----	R X D	-----
2	CLK	-----	ADB
3	DATA	-----	-----
4	GND	GND	GND
5	-----	RTS	-----
6	-----	T X D	-----
7	GND	GND	-----
8	-----	GND	GND

SERIAL PORT IN/OUT TERMINAL

Pin Configuration

Connect serial port output terminal of computer to this terminal with Serial Cable (not supplied).

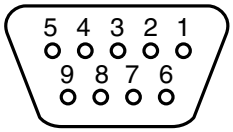

1	-----
2	RxD
3	TxD
4	-----
5	Ground
6	-----
7	-----
8	-----
9	-----

USB PORT TERMINAL

Pin Configuration

Connect USB port output terminal of computer or peripheral equipment to this terminal with USB port Cable (not supplied).

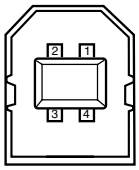

1	Vcc
2	- Data
3	+ Data
4	Ground

Project. Present. Perform.

CHRISTIE DIGITAL SYSTEMS, Inc.
809 Wellington Street North
Kitchener, Ontario
Canada N2G 4Y7
Telephone (519) 744-8005
North America call toll-free
1-800-265-2171 (sales)
Fax (519) 749-3136

CHRISTIE DIGITAL SYSTEMS, Inc.
10550 Camden Drive
Cypress, CA 90630
USA
Telephone (714) 236-8610
Fax (714) 503-3385
Toll Free 1-800-407-7727
Toll Free 1-800-333-3816

CHRISTIE DIGITAL SYSTEMS, Inc.
Image Point
58 Suttons Park Avenue
Reading, Berkshire
RG6 1AZ
United Kingdom
Telephone +44 118 926-6300
Fax +44 118 926-6322

CHRISTIE DIGITAL SYSTEMS, Inc.
Hohenzollernstraße 124-126
41061 Mönchengladbach
Germany
Telephone +49 (0) 2161 664540
Fax +49 (0) 2161 664546

CHRISTIE DIGITAL SYSTEMS, Inc.
627A Aljunied Road
#05-02 Biz Tech Centre
Singapore 389842
Telephone 65-877-8737
Fax 65-877-8747

www.christiedigital.com

Printed in Japan
Part No. 10-A 610 305 5107 (1AA6P1P3890-- MW8K)