myprojectorlamps.com

The most trusted, dependable name in projector lamp sales.

http://www.myprojectorlamps.com

http://www.myprojectorlamps.ca

http://www.myprojectorlamps.eu

The following projector manual has not been modified or altered in any way.

Roadie User's Manual
S12 and X10 Models

Table of Contents

		Section	Contents	Page
1	**Introduction**	1.1	The Projectors	1-1
		1.2	Components	1-2
		1.3	Purchase Record and Servicing	1-2
2	**Installation & Setup**	2.1	Quick Setup	2-1
		2.2	Installation Considerations	2-2
		2.3	Projector Position and Mounting	2-9
		2.4	Source Connections	2-14
		2.5	Power Connection	2-21
		2.6	Operating Orientation	2-21
		2.7	Leveling	2-21
		2.8	Zoom, Focus & Lens Offset	2-22
		2.9	Serial Port Connections	2-22
		2.10	Keypad Protocols and Conversion	2-27
3	**Operation**	3.1	Overview	3-1
		3.2	Projector Basics	3-1
		3.3	Using the Keypad	3-5
		3.4	Navigating the Menus	3-14
		3.5	Using Inputs and Channels	3-18
		3.6	Adjusting the Image	3-23
		3.7	Configuring System Parameters	3-40
		3.8	Working With the Lamp	3-47
		3.9	Projector Status	3-49
		3.10	Using Multiple Projectors	3-49
		3.11	Error Conditions	3-52
4	**Maintenance**	4.1	Warnings and Guidelines	4-1
		4.2	Cleaning	4-3
		4.3	Replacing Keypad Batteries	4-3
		4.4	Replacing the Lamp and Filter	4-4
		4.5	Replacing the Lens	4-9
		4.6	Troubleshooting	4-11
5	**Specifications**	5.1	Specifications	5-1
6	**Appendices**	A	Glossary	A-1
		B	Keypad Reference	B-1
		C	Menu Tree	C-1
		D	Serial Communication Cables	D-1
		E	Throw Distance	E-1
		F	Optional Input Modules	F-1

NOTE: Due to continuing research, all information in this manual is subject to change without notice

Downloaded from Projector.com

Section 1

Introduction

1.1 The Projectors

Roadie projectors are powerful professional quality DMD™ projectors that utilize Digital Light Processing™ (DLP™) technology from Texas Instruments to achieve high-brightness and high-resolution multimedia and video projection. All models are compatible with standard international video formats and can interface with IBM®-compatible PC, Macintosh® computers and workstations. They are robust units built for frequent transport and quick installations, and are ideal for large audience venues demanding effortless setup and brilliantly sharp images.

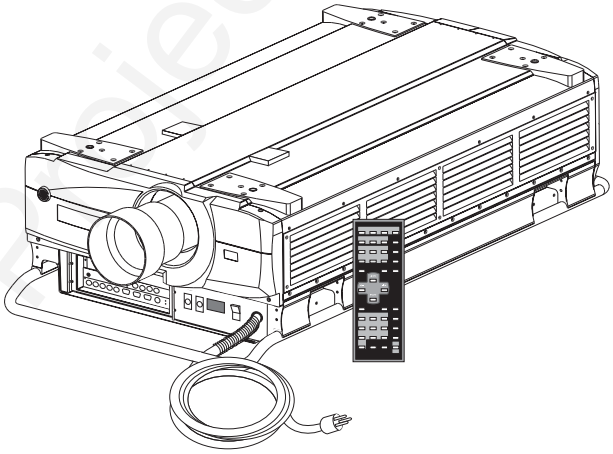

Features

- ◊ 1280 x 1024 (1024 x 768 for *X10*) true resolution, other resolutions fully scaleable
- ◊ 12,000 ANSI lumens achievable brightness in *S12*
  10,000 ANSI lumens achievable brightness in *X10*
- ◊ Achievable contrast ratio of greater than 250:1 ANSI, 400:1 full field
- ◊ Tandem horizontal and vertical sizing software control
- ◊ Independent vertical stretch for changing aspect ratios
- ◊ Keystone adjustment via menu option *(optimized in X10 only)*
- ◊ Interchangeable lenses for diagonal screen sizes up to 40 or more feet
- ◊ Display of NTSC, PAL and SECAM video input
- ◊ Display from PCs, VCRs, laser disc players, video cameras, etc.
- ◊ Memory for up to 99 custom “channels” (source setups)
- ◊ Intuitive on-screen menus or hidden direct control
- ◊ Identical built-in and remote keypads
- ◊ Controller and switcher compatibility
- ◊ Input switching with keypad
- ◊ Built-in RS-232 and RS-422 ports for computer control and networked projectors
- ◊ Remote-controlled shutter
- ◊ Rugged ergonomic design for harsh environments and secure handling
- ◊ Strong exterior panels of metal and polymer
- ◊ Simple hardware option for hoisting and for stacking multiple projectors
- ◊ Modular design for easy servicing

Downloaded from Projector.com

How The Projectors Work

All models accept data/graphics and video input signals for projection on to front or rear flat screens. High brightness light is generated by an internal 1.9 kilowatt Xenon arc lamp, then modulated by three DMD (digital micromirror device) panels that provide digitized red, green or blue color information. Light from the “on” pixels of each panel is reflected, converged and then projected to the screen through a single front lens, where all pixels are perfectly superimposed as a sharp full-color image.

1.2 Components

Included with the projector is an infrared (IR) remote keypad, an integral 20 amp line cord, 4 eyebolts and a *User’s Manual*. Make sure that you have all these items, and note that if you have purchased this projector, a purchaser’s *Warranty Registration Card* is also included–complete this card and return it directly to Christie Digital Systems as soon as possible.

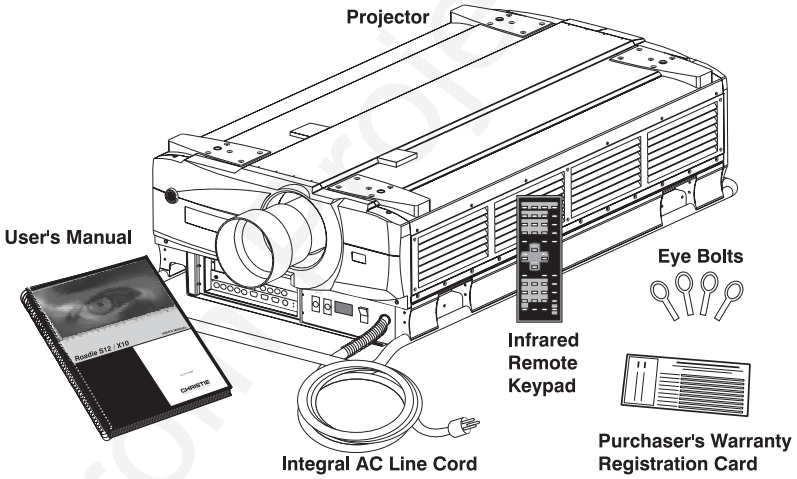

Figure 1.1. Projector Components
SHOWN WITH ADDED LENS

1.3 Purchase Record and Servicing

Whether the projector is under warranty or the warranty has expired, Christie’s extensive factory and dealer service network is always available. Christie service technicians are fully trained to quickly diagnose and correct projector malfunctions. Complete service manuals and updates are available to service technicians for all projectors.

Should you encounter a problem with the projector and require assistance, contact your dealer or Christie. In many cases, any necessary servicing can be performed on site. If you have purchased the projector, fill out the information below and keep with your records.

Purchase Record

Dealer:	
Dealer Phone Number:	
Projector Serial Number*:	
Purchase Date:	
Installation Date, if applicable:	

** NOTE: The projector serial number is located on the projector's front identification label*

Downloaded from Projector.com

Section 2

Installation & Setup

This section explains how to install and set up the projector. If you are familiar with the projector and want to quickly set it up for temporary use, follow the *Quick Setup* instructions below. For a more complete setup, follow the instructions and guides covered in the remaining subsections.

NOTE: ***1)*** *The lens is not mounted when the projector is shipped from the factory. For instructions on how to install or replace a lens, refer to* ***4.5, Replacing the Lens****.* ***2)*** *This section assumes the plug and video decoder are installed.*

2.1 Quick Setup

Follow these steps for quick setup of the projector in a standard floor mount position.

STEP 1 ' Position the Projector

Set the projector at the expected throw distance (projector-to-screen distance) and vertical position. See *2.3, Projector Position and Mounting* and *Appendix E*. Make sure that the projector is level from side-to-side (see *2.7, Leveling*).

STEP 2 ' Connect a Source

Locate the main input panel at the front of the projector. The lower left area, labeled **INPUT 1**, accepts an RGB input via BNC connectors. The upper right area (assuming the video decoder is installed) accepts a composite video at **INPUT 3** or S-video input at **INPUT 4**. Connect your source to the appropriate panel connectors.

STEP 3 ' Connect the Line Cord to AC Power

The projector has its own integral 20-amp line cord. ***Use this cord only.*** Input power required is 200 - 240 VAC, 50 to 60 Hz @ 14 amps for 200 V. Attach a proper AC connector, following the wiring guide on page 5-3 (*note: requires qualified service technician*). Make sure the AC on/off switch (breaker) is set to ON position and that the line voltage indicator displays an acceptable AC level when you connect to AC.

WARNING

Do not attempt operation if the AC supply is not within the specified voltage and power range.

STEP 4 ' Turn the Projector ON

Using either the built-in or remote keypad, press [Power*] and hold for approximately 1 second to turn the projector on (or press [Power*] [▲ON]). Let the projector warm up for about five minutes. The **POWER** LED, located in the lower right corner of the front input panel, should glow a steady green.

Downloaded from Projector.com

STEP 5 ' Select a Source

Using either the built-in or remote keypad, press Input1, Input2, Input3, or Input4 to select and display the image for the source you connected in Step 2. The display will resize as needed, producing an image as large as possible for the type of source present.

STEP 6 ' Adjust Image

With the input image displayed, press Lens on any keypad.

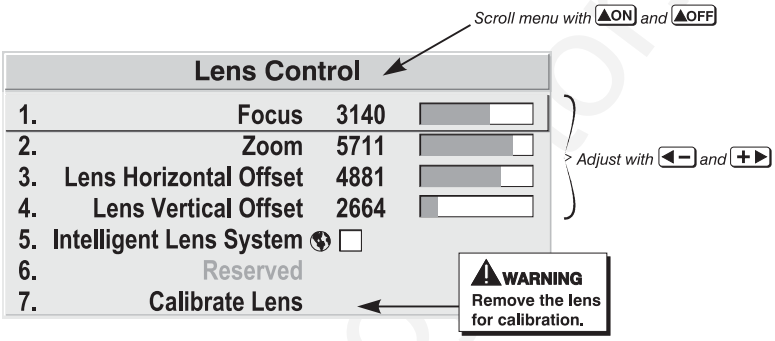

Figure 2.1. Lens Adjustments

In the *Lens* menu, use the keypad as shown above to focus the image clearly and, if a zoom lens is present, to increase or decrease image size. If desired, adjust horizontal and/or vertical offsets to shift the lens and image location.

Press Menu to refine other display parameters, if necessary. See *3.5, Using Inputs and Channels* if you want to work with other source inputs or defined channels.

2.2 Installation Considerations

Although the *Roadie* projector is engineered to deliver a stunning high brightness quality output, the final display quality could be compromised if the projector is not properly installed. This subsection discusses issues you should consider before proceeding with a final installation. Even if you do not intend to use the projector in a fixed and permanent installation, this subsection will help you to better understand what may be done to enhance display performance.

Lifting and Hoisting '

For any new installation, you will likely have to safely lift or hoist the projector into place. Keep in mind the following guidelines for safety.

Using the Integral Handles

The projector includes sturdy integral wrap-around handles for convenient grasping. While these handles are adequate for brief hand transport, such as lifting or carrying over short distances by 2 or more people, the end handles are not intended to support the entire weight of the projector for extended periods of time. In particular, never hoist or suspend the projector from these end handles or use them in an installation (see Figure 2.2).

⚠ WARNING ⚠

Use end handles for brief hand transport only.
Never suspend the projector from the side handles.

Downloaded from Projector.com

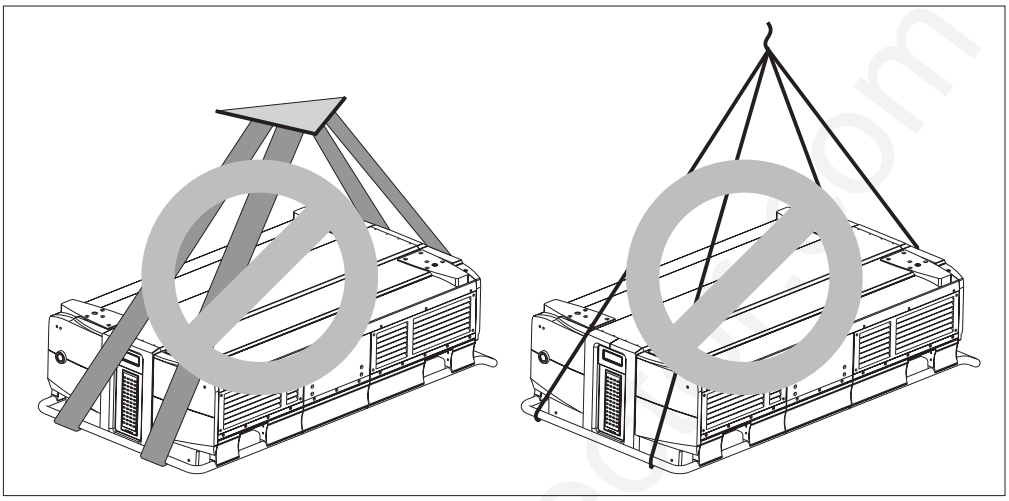

Figure 2.2. Do not hoist by end handles

Hoisting

⚠ WARNING ⚠
Use straps or cabling with load capacity adequate for the projector weight.

You can use appropriate webbed strapping and hoisting/rigging equipment to lift the projector and/or install it as a permanently suspended installation. Make sure to attach the straps inside the *side* handles only, as shown in Figure 2.3—do not use the end or side handles. Hoist only one projector at a time.

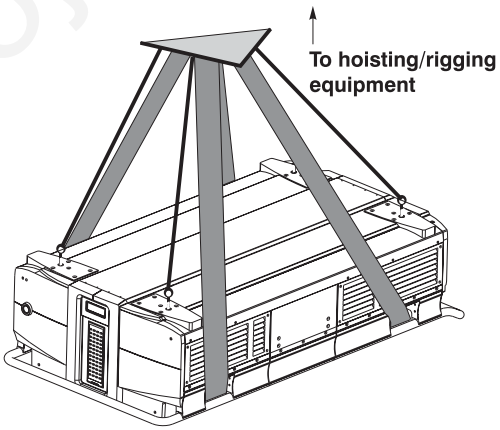

Figure 2.3. Straps in Place

Note that the projector also includes tapped bolt holes in each corner that accept screw-in eyebolts (provided). Attach the 4 eyebolts *securely* (at least 20 in.lb. torque) and rig them with safety cabling when hoisting or suspending the projector.

⚠ WARNING ⚠
Use at least 20 in.lb. torque to attach eyebolts.

⚠ WARNING ⚠
Remove the lens before hoisting.

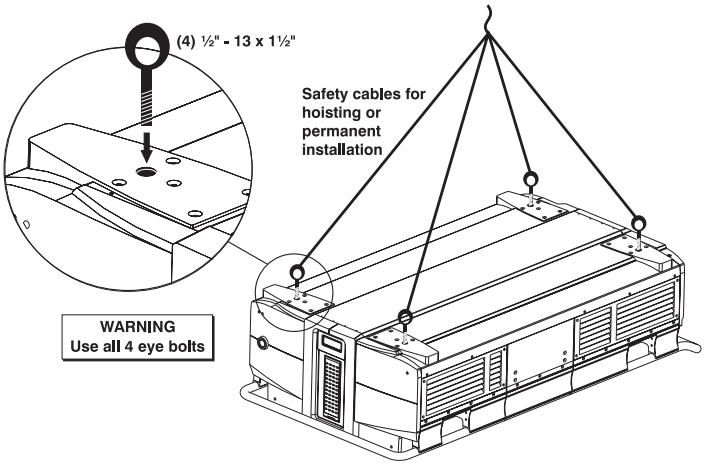

Figure 2.4. Attach Safety Cables

Downloaded from Projectorscreen.com

Installation Type

Choose the installation type which suits your needs: front or rear screen, floor mount or inverted mount.

Front Screen, Floor Mount Installation

ADVANTAGES	CONSIDERATIONS
• Easy to set up • Can be moved or changed quickly • Easy to access	• Shares floor space with audience

Front Screen, Inverted Mount (ceiling) Installation

ADVANTAGES	CONSIDERATIONS
• Does not take up audience space • Projector is unobtrusive • Projector cannot be accidentally moved	• Installation is more permanent • It is more difficult to access the projector

Rear Screen, Floor Mount Installation

ADVANTAGES	CONSIDERATIONS
• Projector is completely hidden • Projector is easily accessed • Usually good ambient light rejection	• Requires separate room

Rear Screen, Inverted Mount (ceiling) Installation

ADVANTAGES	CONSIDERATIONS
• Projector is completely hidden • Usually good ambient light rejection	• Requires separate room • Installation cost is usually higher

Rear Screen, Floor Mount with Mirror

ADVANTAGES	CONSIDERATIONS
• Projector is completely hidden • Usually good ambient light rejection • Requires less space behind screen than other rear screen installations	• Requires separate room • Installation cost is usually higher

Screen Type

Front Screen Installations

While there are two basic screen types, flat and curved, generally flat screens are recommended for this projector. Flat screens offer a gain of about 1 with a viewing angle just less than 180°. Incident light reflects equally in all directions so the audience can see the display from various angles. Because of the low gain, flat screens are most effective when ambient lighting is reduced, although this difference may be negligible given the high brightness output from this projector.

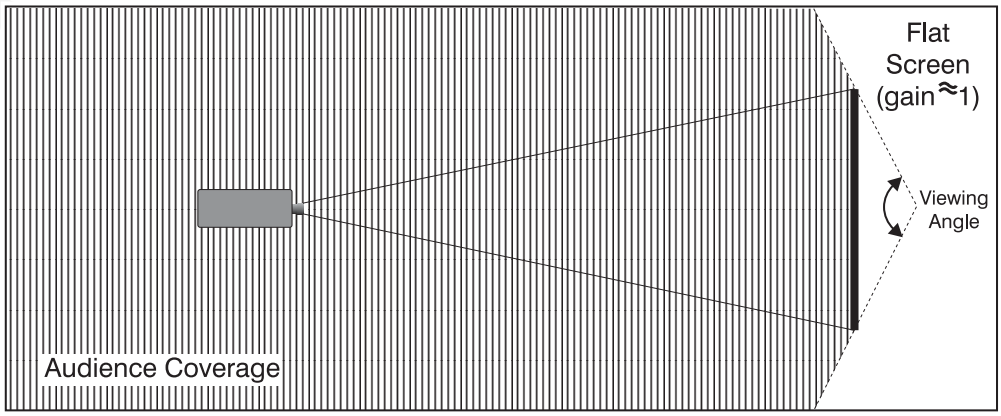

Figure 2.5. Audience Coverage with Flat Screen

Downloaded from Projector.com

NOTE: Lenses for this projector are designed primarily for use with flat screens, but the projector depth-of-field range allows the lens to be focused on curved screens as well. While focus remains sharp in the corners, there may be significant pincushion distortion, primarily at the top of the screen.

Rear Screen Installations

There are two basic types of rear screens: diffused and optical. A *diffused* screen has a surface which spreads the light striking it. Purely diffused screens have a gain of less than 1. The main advantage of the diffused screen is its wide viewing angle, similar to that of a flat screen for front screen projection. *Optical* screens take light from the projector and redirect it to increase the light intensity at the front of the screen. This reduces it in other areas. A viewing cone, similar to that of a curved front screen installation, is created.

To summarize, optical screens are better suited for brightly lit rooms where the audience is situated within the viewing cone. Diffused screens may be better suited when a wide viewing angle is required but there is low ambient room lighting.

Screen Size

Screen size (image size) may be from approximately 5 to 50 feet diagonal, depending on the lens you are using. For instance, a 0.8:1 lens (0.6:1 as SXGA) can produce a 5 to 25 foot image size, whereas a 4-7:1 zoom lens (3.1-5.6:1 as SXGA) produces a 10 to 40 foot image size. Choose a screen size which is appropriate for your lens and application. Keep in mind that if the projector will be used to display text information, the image size must allow the audience to recognize all text clearly. The eye usually sees a letter clearly if eye-to-text distance is less than 150 times the height of the letter. In other words, small text that is simply located too far from the eye will be illegible no matter how sharply and clearly it is displayed.

NOTES: ***1)*** *Screens with aspect ratios of 4:3 are typically specified by diagonal size, but screens having other aspect ratios are not always specified by diagonal size.* ***2)*** *Stated screen sizes below refer to the diagonal size of a 4:3 screen—a 5:4 screen may differ slightly.*

Lens Type	Diagonal Screen Size
0.8:1 fixed *(NOTE: 0.6:1 as SXGA)*	5’ - 25’
1.5 – 2.5:1 zoom *(NOTE: 1.2 – 1.9:1 as SXGA)*	6’ - 40’
2.5 - 4:1 zoom *(NOTE: 2.0 – 3.2:1 as SXGA)*	6’ - 40’
4 - 7:1 zoom *(NOTE: 3.1:1 – 5.6:1 as SXGA)*	10’ - 40’
7 – 15:1 zoom *(NOTE: 5.4:1 – 12:1 as SXGA)*	10’ – 50’

Screen Aspect Ratio

Aspect ratio describes the proportion of the screen and is expressed as the ratio of width to height, such as “4:3” or “5:4” (see right). Although image size and image aspect ratio can both be adjusted quickly through projector software, it is still a good idea to choose a *screen* aspect ratio which is most appropriate for your projector. Ideally, to exactly fill a screen with an

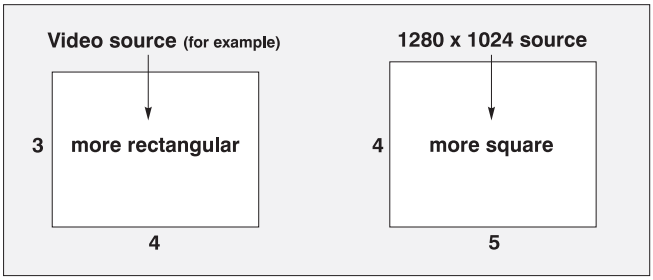

Figure 2.6. Aspect Ratios of 4:3 and 5:4

Downloaded from Projector.com

image, the aspect ratio of the screen should correspond to the aspect ratio of the image, which depends on the source in use. For example, standard video from a VCR has a 4:3 ratio (approximately), whereas a high resolution graphics signal typically has a 5:4 aspect ratio. By default, Roadie images will be as large as possible and, with the exception of graphics sources, will maintain their aspect ratio.

NOTE: With a few exceptions, sources with less than 1280 x 1024 resolution have a 4:3 aspect ratio. The normal aspect ratio for 1280 x 1024 sources is 5:4.

Using a 5:4 Screen with S12

If you use a mix of sources—i.e., those with the rectangular 4:3 aspect ratio as well as those with the slightly more square 5:4 aspect ratio—a 5:4 screen will likely provide the most flexibility with the *S12* projector. With one exception, XGA images projected by the *S12* will—by default—resize to fill an SXGA screen. The exception (illustrated in Figure 2.7) is that video signals will retain their aspect ratio—fill the 5:4 screen by increasing *Vertical Stretch* to slightly expand the image to the top and bottom edges of the screen. For details, see *3.6, Adjusting the Image*.

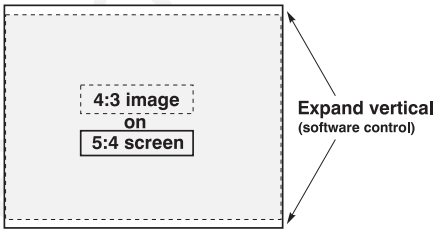

Figure 2.7. Adjusting a 4:3 Video Image

Using a 4:3 Screen with S12

If you are using a 4:3 screen with the *S12*, 4:3 images will—by default—slightly overlap the top and bottom of the screen. To correct, reduce *Vertical Stretch* so that the "too tall" 5:4 image no longer spills over the top or bottom of the screen (Figure 2.8). This control eliminates the need for simply moving the projector farther from the screen, which would also result in black borders for all sources. See *3.6, Adjusting the Image*.

NOTE: The Vertical Stretch adjustment may soften the image slightly, but is rarely noticeable.

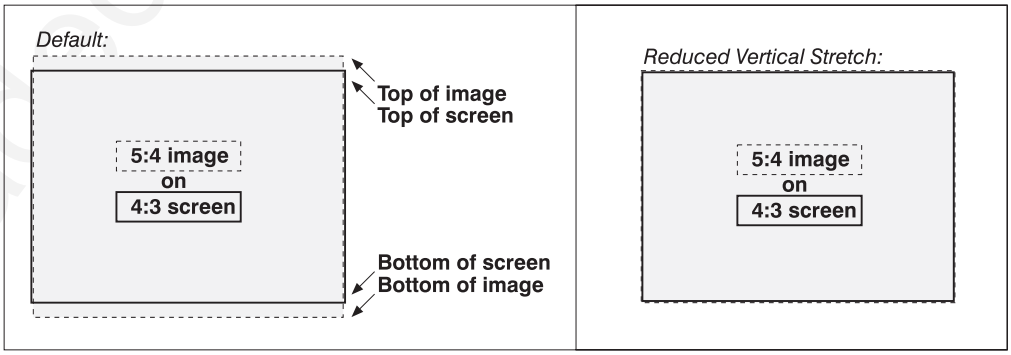

Figure 2.8. Using a 4:3 Screen for a mix of 5:4 and 4:3 sources (S12)

Ideal Room Lighting

The high brightness output of the Roadie projector is certainly well suited for locations where ambient lighting is less than optimum for projection, yet there are still many simple things you can do to optimize your installation.

Visiting a movie theater can give you an idea of what makes an ideal projection environment. Walls, floors and furnishings are dark and matte finished. A projection room should not have white reflective ceilings or non-directional lighting such as

fluorescent lights. The white ceiling spreads light, making the room appear brighter. Keep lighting and reflections to a minimum.

If it is not possible to eliminate fluorescent lights, consider using incandescent spot lighting or parabolic reflectors ("egg crates") to direct light down to the floor. Light dimmers or rheostats allow further control.

Outside windows are undesirable in any projection room. A small crack between curtains on a sunny day can wash out a projected image. If you do have windows, make sure that window coverings are opaque and overlapping — some window coverings are designed to provide up to 100 percent blockage of outside light. Ideally, the material should have a matte finish.

To minimize the effects caused by unwanted light from door and aisle ways, carefully choose the position of your projector and screen. Figure 2.9 shows an installation where poor screen placement allows too much unwanted light to enter the screen. In Figure 2.10, screen and the projector are positioned so that unwanted light is minimized.

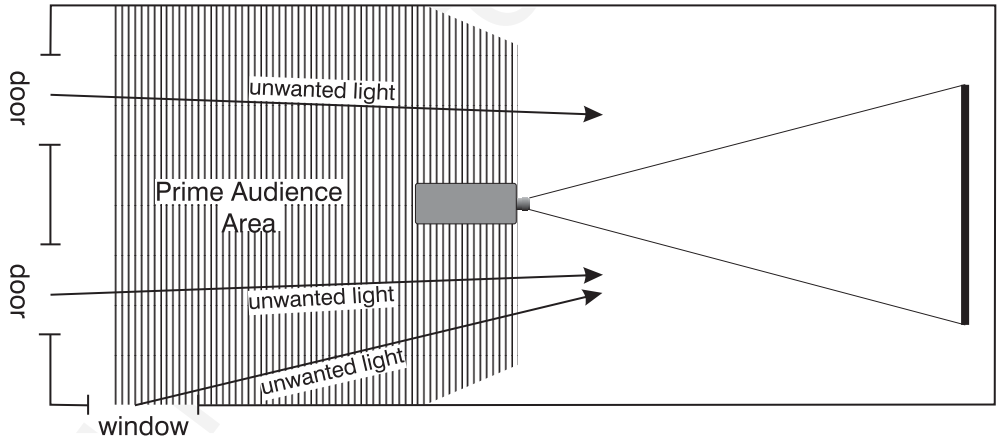

Figure 2.9. Poor Screen Placement

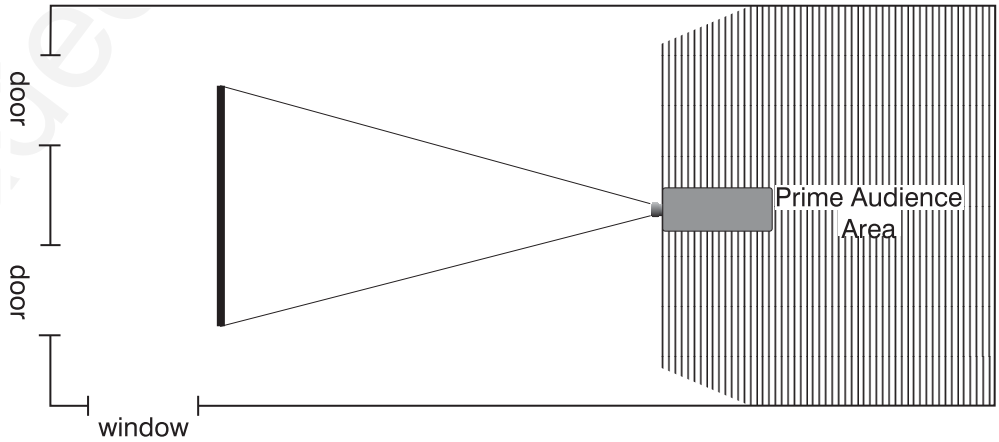

Figure 2.10. Better Screen Placement

Even with all lighting removed it is still possible that room reflections within the room can slightly degrade the image. Light from the projection screen should be absorbed by the ceilings, walls and floors so that it will not be reflected back to the screen. Again, keep reflective surfaces to a minimum.

Downloaded from Projector.com

Other Considerations

Other considerations and tips which can help you improve your installation:

- Ventilation is an important factor when preparing a projection room. The ambient temperature should be kept constant and below 35°C (95°F). Keep the projector away from heating and/or air conditioning vents. Changes in temperature can cause drifts in the projector circuitry which may affect performance.
- Keep the projector away from devices which radiate electromagnetic energy such as motors and transformers. Common sources of these are slide projectors, speakers, power amplifiers, elevators, etc.
- For rear screen applications, less space is required if a mirror is used to fold the optical path.
- Choose the right screen size for the application:
  - ◊ As screen size increases, magnification increases and reduces brightness. Select a screen size which is appropriate for the venue, but not larger than that required.
  - ◊ Installing a large screen in a small room is similar to watching television close up; too large a screen can overpower a room. A good rule of thumb is to be no closer than 1.5 times the width of the screen.
  - ◊ Larger screens require greater attention to lighting conditions.
- When laying out the projection room, consider positioning the projector and screen in a manner which will achieve maximum audience coverage and space efficiency. For example, placing the screen along the larger wall in a rectangular room will reduce audience coverage. Figure 2.11 shows two examples of how audience coverage is maximized.

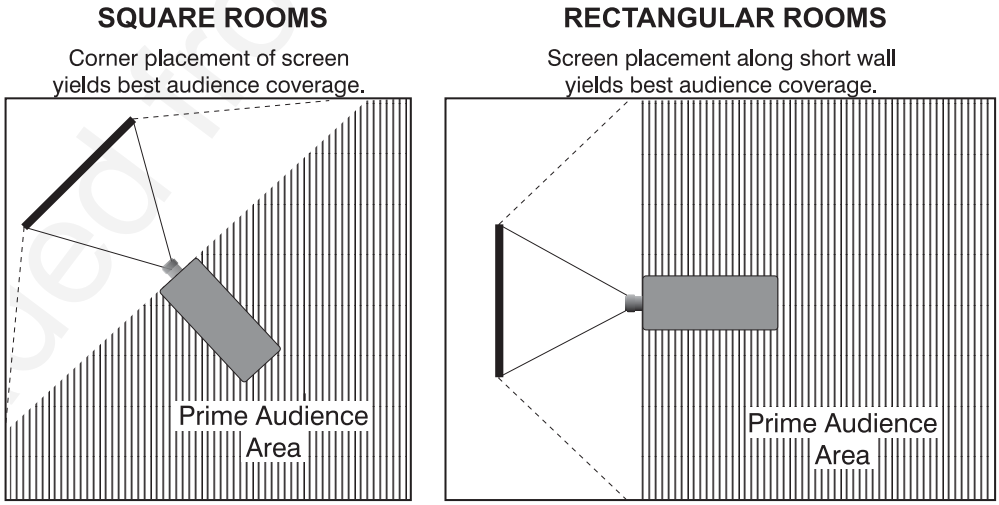

Figure 2.11. Screen Locations for Maximum Audience Coverage

Downloaded from Projector.com

2.3 Projector Position and Mounting

Installation type, screen type, and lighting all affect where the projector is positioned. In addition, both throw distance (the distance between the projector and screen) and vertical position (the height of the projector in relation to the screen) must be determined for every new installation. Both depend on the screen size and lens type you are using. Make sure that the room can accommodate the required position of the projector for the chosen screen size.

Throw Distance

Throw distance is the distance between the projector's ***front feet axes*** and the ***screen***. For any installation, an accurate throw distance must be determined in order for the image to be of the right size for your screen–the farther the projector is from the screen, the larger the image.

NOTE: If your projector is tilted in relation to the screen, as is sometimes the case for large venues or elevated installations, throw distance still represents the smallest measurement between the screen and front feet.

Throw distance is roughly equal to the horizontal width of the screen multiplied by the type of lens you are using. For example, if you are using a 0.8:1 lens (0.6:1 as SXGA), proper throw distance will be approximately 0.8 (0.6 as SXGA) x the screen width. Once you know your screen size and lens, you can estimate throw distance needed—see example at right.

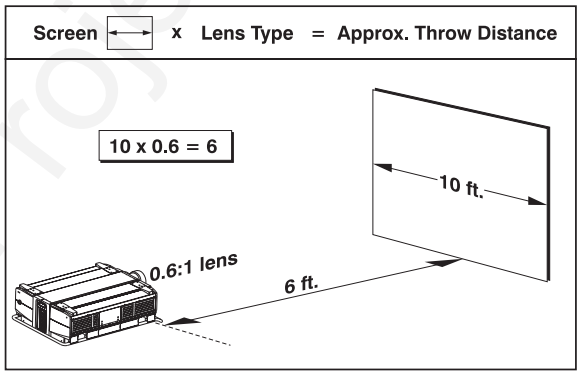

Figure 2.12. Estimating Throw Distance: Example
(SEE APPENDIX E FOR DETAILS)

IMPORTANT: For proper placement in an installation, always refer to the throw distance formula and/or graph for your lens as listed in Appendix E. Keep in mind that due to lens manufacturing tolerances for lens focal length, actual throw distance can vary ±5% or more between lenses described as having the same throw ratio.

Vertical & Horizontal Position

THE VERTICAL POSITION of the projector in relation to the screen also depends on the size of the screen and the lens type. Correct vertical position helps ensure that the image will be rectangular in shape rather than keystoned (having non-parallel sides) and that image focus and brightness both remain optimized.

NOTE: A keystoned image can be corrected through software in the X10. See Section 3.

In addition, vertical position of the image can be manually offset—that is, moved up or done. Press [Lens] to display the *Lens Control* menu, then adjust offsets with [◄–] and [+►]. Note that the range of adjustment depends on the type of *projector* as well as *lens* and whether or not you are also offsetting horizontally. See Table 2.1 for the percentage of the image that can be displayed above and below the center of each type of lens compatible with your projector. See Figure 2.13 for average *X10* offsets (*non-VistaPro* lenses only). All *S12* offset ranges are illustrated in Figure 2.14.

NOTE: Due to manufacturing tolerances, any offset range can vary ±5% or more between lenses described as having the same throw ratio, between projectors, and

Downloaded from Projector.com

with any lens/projector combination. In addition, keep in mind that long throw distances significantly reduce offset ranges.

Table 2.1. Vertical Offset Ranges

Lens Type / Throw Ratio	Max. Amount of Image Above or Below Lens Center	
	X10	S12
0.8:1 *(0.6:1 as SXGA)*	⇧ 98% ⇩ 103%	⇧ 80% ⇩ 60%
1.5 - 2.5:1 *(1.2 – 1.9:1 as SXGA)*	⇧ 104% ⇩ 89%	⇧ 70% ⇩ 89%
2.5 – 4:1 *(2.0 – 3.2:1 as SXGA)*	⇧ 90% ⇩ 90%	⇧ 72% ⇩ 81%
4-7:1 *(3.1:1 – 5.6:1 as SXGA)*	⇧ 101% ⇩ 101%	⇧ 82% ⇩ 82%
7-15:1 *(5.4:1 – 12:1 as SXGA))*	⇧ 104% ⇩ 112%	⇧ 70% ⇩ 89%
Other Lenses (X10 only)		
1:1 *(VistaPro 1.2:1)*	⇧ 75% ⇩ 75%	*not used in S12*
2.3:1 *(VistaPro 3:1)*	⇧ 93% ⇩ 107%	*not used in S12*
3.9:1 *(VistaPro 5:1)*	⇧ 95% ⇩ 91%	*not used in S12*
5.5:1 *(VistaPro 7:1)*	⇧ 100% ⇩ 115%	*not used in S12*
1.2 – 2.3:1 *(VistaPro 1.5 – 3:1)*	⇧ 86% ⇩ 86%	*not used in S12*
2.3 – 5.5:1 *(VistaPro 3 – 7:1)*	⇧ 98% ⇩ 94%	*not used in S12*

NOTE: FOR ALL LENSES AND PROJECTORS...
- ***Maximum optical performance is produced at zero offset (i.e., with the projector at the center of the screen) — geometry, focus and light output will all be optimized.***
- ***Long throw distances significantly reduce offset ranges.***
- ***For inverted projectors, invert the illustrations.***

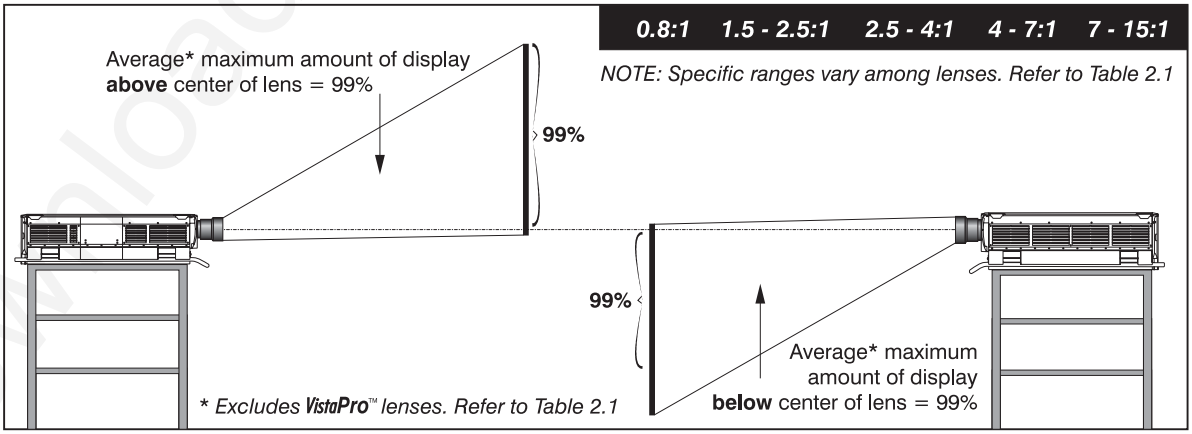

Figure 2.13. Average Maximum Vertical Offsets in X10
(NON-VISTAPRO LENSES ONLY)

Downloaded from Projector.com

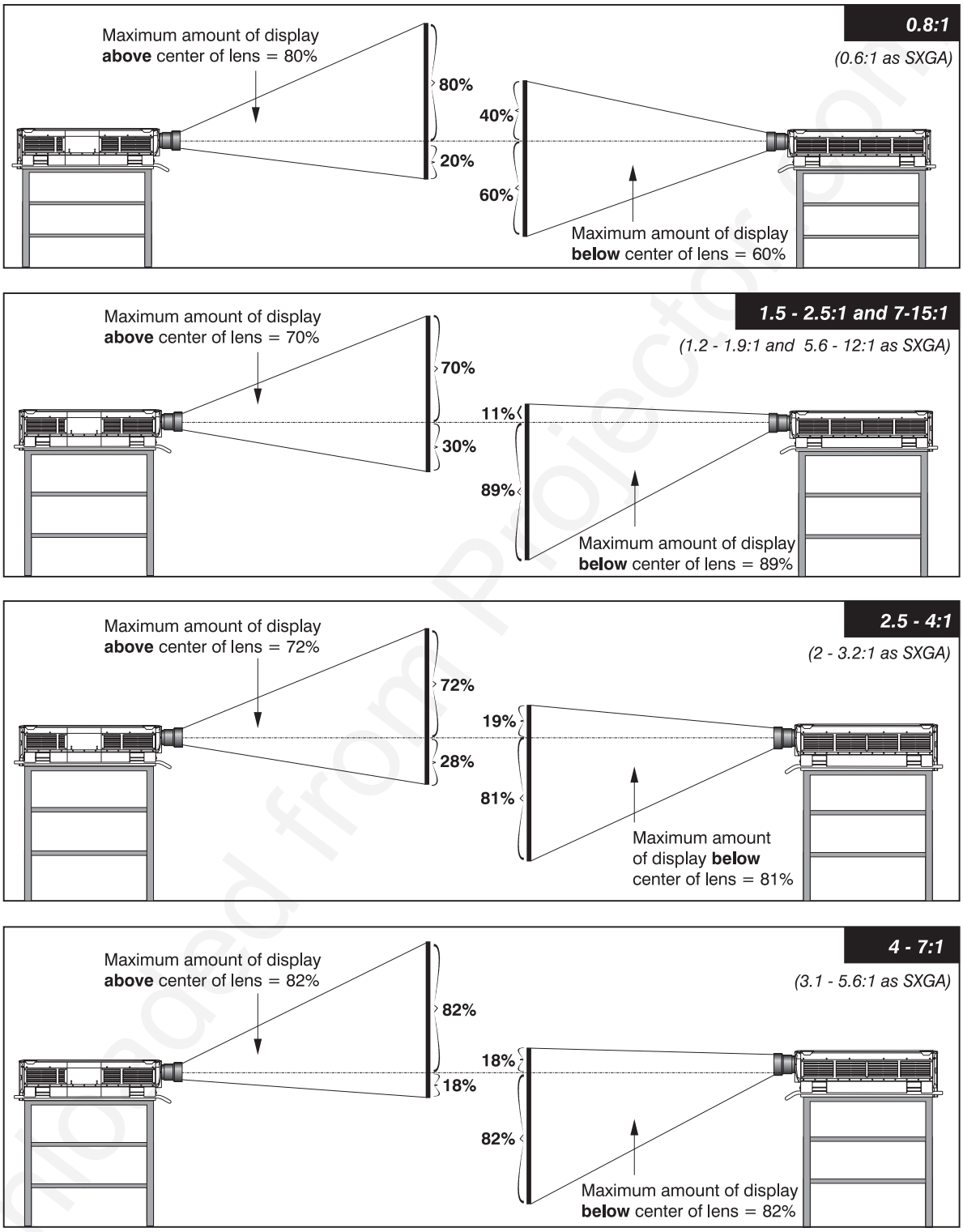

Figure 2.14. Maximum Vertical Offsets in S12

NOTES: ***1)*** *For any projector, if you cannot raise or lower the image enough using mechanical vertical offsets, try adjusting* ***V-Position*** *in the* ***Size and Position*** *menu (see* ***3.6, Adjusting the Image****) when displaying at less than the maximum size.* ***2)*** *If the image becomes keystoned or exhibits uneven brightness, the projector may simply be too high or low in relation to the screen.* ***3)*** *Recommended offset ranges can*

Downloaded from Projector.com

sometimes be exceeded, however this may affect image quality. ***4)*** *Simultaneous* ***horizontal*** *and* ***vertical*** *offset can limit the adjustment range of each.*

THE HORIZONTAL POSITION of the image can be offset—that is, shifted left or right of lens center—by using the [Lens] key. This displays the *Lens Control* menu, where offsets can be adjusted with [◄–] and [+►]. Maximum horizontal offsets—expressed as the maximum percentage of the image that can be projected to either side of the lens center—are shown in Figure 2.15. While offsets vary with lens type (see *Section 5, Specifications*), typical offsets are approximately 77% in *X10,* 67% in *S12*.

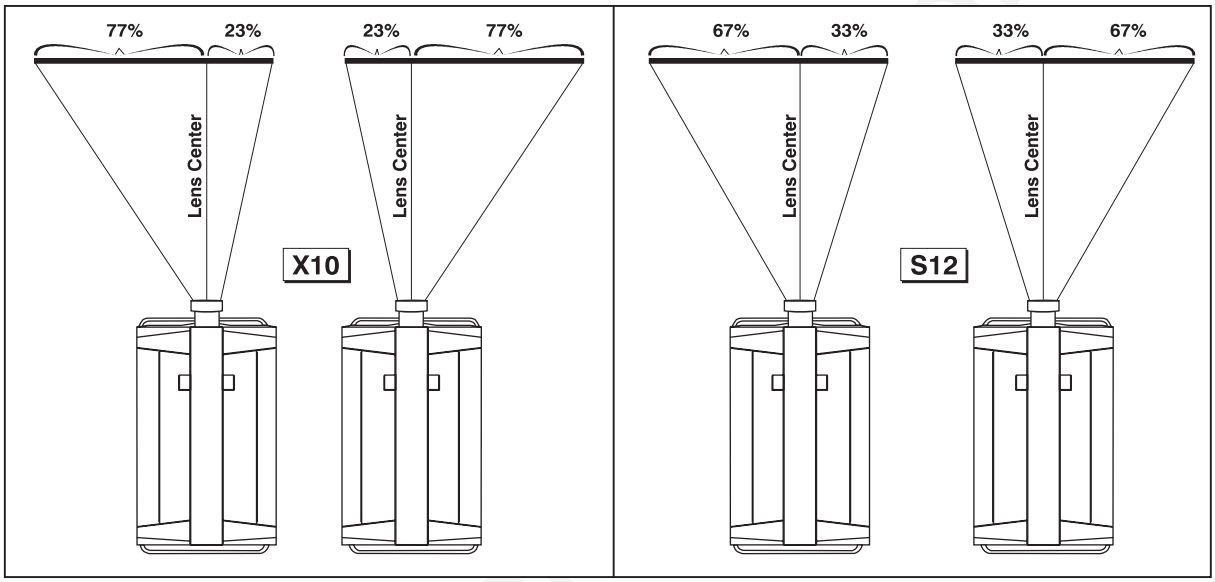

Figure 2.15. Average Maximum Horizontal Offsets in X10 and S12
(SEE SECTION 5 FOR SPECIFIC HORIZONTAL OFFSETS FOR EACH LENS)

Mounting

For typical front or rear floor mounts, mount the projector on a secure table or cart. Take care with a mobile cart—avoid sudden stops, excessive force and uneven surfaces that may cause the projector and cart combination to overturn.

The table or cart should be reasonably level. Fine adjustments to the projector level can be made by adjusting the height of the projector legs; refer to *2.7, Leveling* for details.

Special Mounting

Note that projector can be rotated and mounted at any vertical angle—i.e., you can tilt the face of the projector up or down as much as desired for your installation. The side-to-side tilt, however, must not exceed 15° (see Figure 2.16). This limit ensures that the arc lamp in the projector operates properly and safely. Always make sure that exhaust air from the projector does not vent towards the lens, otherwise you may detect heat waves in your projected image.

Downloaded from

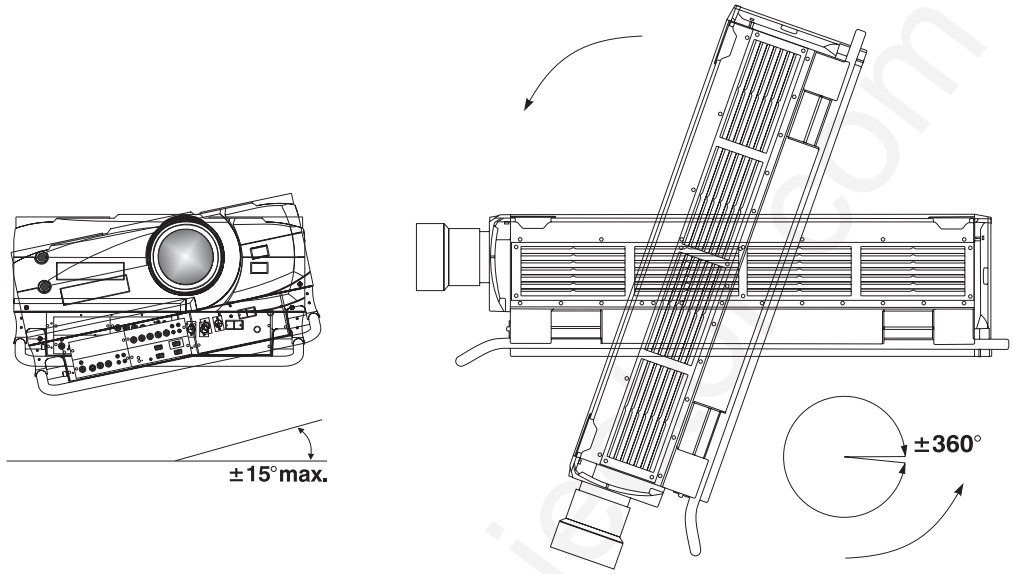

Figure 2.16. Horizontal and Vertical Tilt Ranges

You must use the proper ceiling mount fixture or stacking kit for your projector. For more information, contact your dealer.

Folded Optics ' In rear screen applications where space behind the projector is limited, a mirror may be used to fold the optical path (see right). The position of the projector and mirror must be accurately set—if considering this type of installation, call your dealer for assistance.

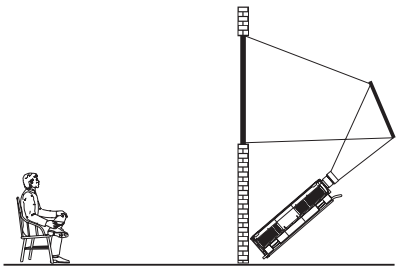

Downloaded from Projector.com

2.4 Source Connections

The front panel of the projector provides standard input panels to which you may connect a variety of sources. See Figure 2.17–the lower left area (**INPUT 1**) typically accepts an *RGB signal* from an external RGB source, or it can also be used for YPbPr signals or additional video sources. The upper right panel–the *Video Decoder Module*–accepts only *composite video* at **INPUT 3** or *S-video* at **INPUT 4** from devices such as VCRs, laser disk players or DVD players. There are also several optional interfaces available for connecting other sources at **INPUT 2.** Such an option installs in the upper left area, just below the projector front ID label.

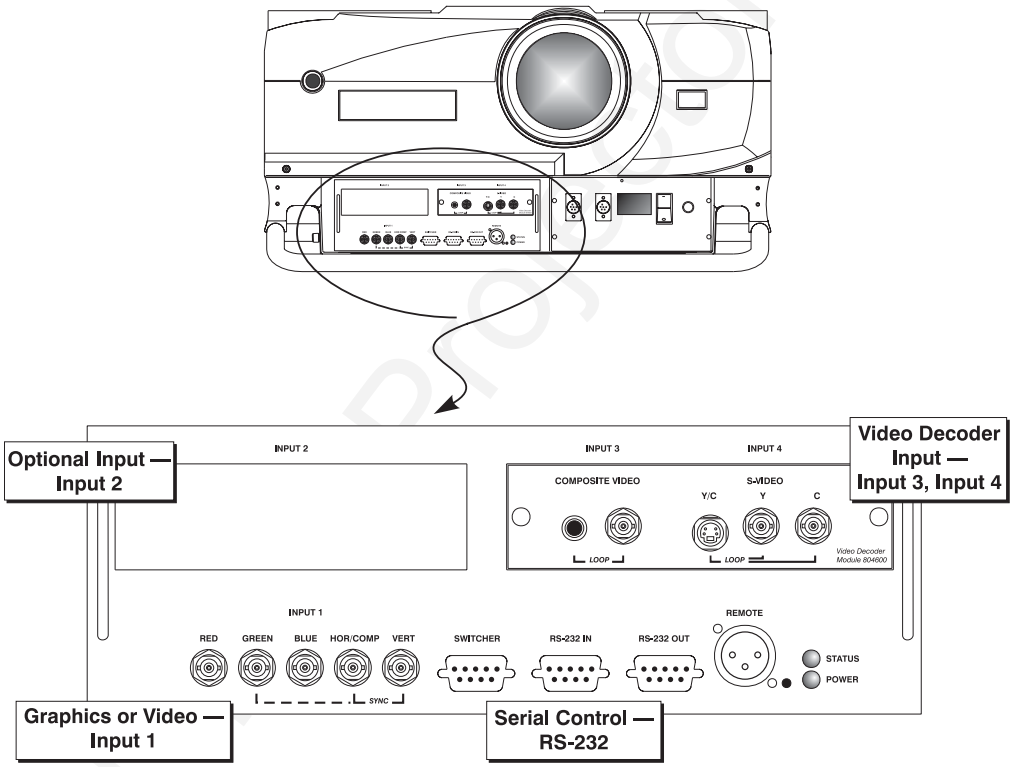

Figure 2.17. Front Connector Panel

NOTE: For all connections as described in the following pages, use high-quality ***shielded*** *cables only.*

Downloaded from Projector.com

RGB Signals

INPUT 1 provides 5 BNCs (connectors) for linking to a variety of sources. The typical connection would be to an RGB source such as VGA, SVGA, XGA, Mac, PowerMac, DEC, Sun, SGI and others. This projector supports multiple sync types with RGB signals: sync-on-green, composite sync, and separate H & V syncs.

NOTE: Depending on the source, you may need a custom adapter cable with BNC connectors at the projector end and a different type of connector at the other (such as a 15-pin "D" connector for computer sources). Contact your dealer.

Connect the **SYNC** BNC input(s) first. Then connect the red, green and blue source outputs to the **RED**, **GREEN**, and **BLUE** BNCs on the **INPUT 1** panel. If the source uses sync-on-green, only the red, green, and blue connections are required. If the source provides a composite sync output, connect it to the **SYNC** input labeled **HOR/COMP**. If the source provides separate horizontal and vertical sync outputs, connect horizontal sync to the **SYNC** input labeled **HOR/COMP** and connect vertical sync to **SYNC** input labeled **VERT**. See Figure 2.18.

NOTES: ***1)*** *If for some reason the projector fails to recognize a signal as an RGB signal, specify this* ***Color Space*** *option within the* ***Image Settings*** *menu. See* ***3.6, Adjusting the Image. 2)*** *To connect YPbPr signals–such as from DVD or analog HDTV sources–to* ***INPUT 1****, use the red, green and blue BNCs as described in* ***YPbPr Signals*** *on the next page.*

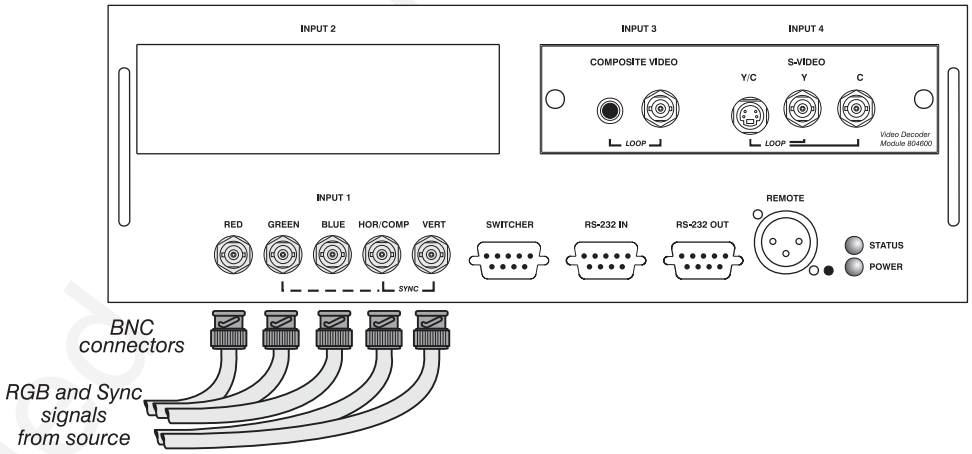

Figure 2.18. Connecting RGB Input

Downloaded from Projector.com

YPbPr Signals (COMPONENT VIDEO)

Connect a YPbPr signal (*component video*) to **INPUT 1** as shown in Figure 2.19.

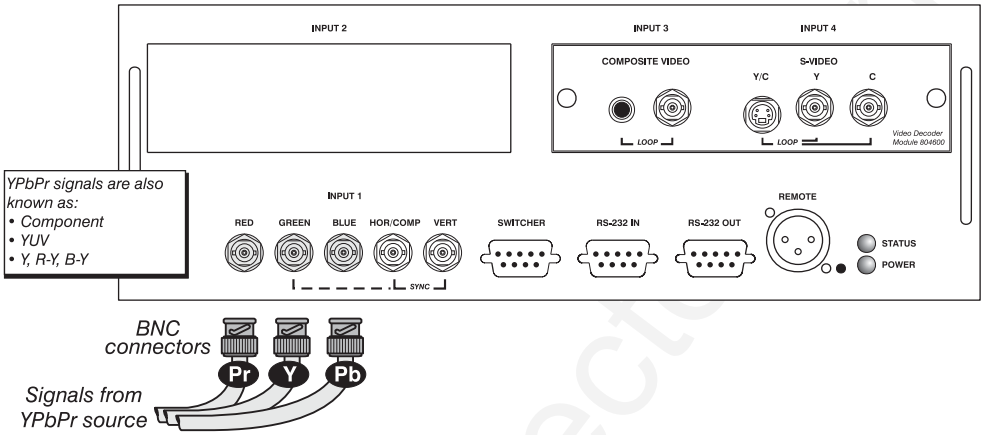

Figure 2.19. Connecting YPbPr Signal

NOTES: ***1)*** *If, for some reason, the projector fails to recognize a YPbPr signal, specify this* ***Color Space*** *option within the* ***Image Settings*** *menu. See* ***3.6, Adjusting the Image****.* ***2)*** *Do not connect digital component signals (known as YCbCr) to* **INPUT 1**. *Use the appropriate digital interface installed at* **INPUT 2**.

Composite Video

The video decoder input panel provides simultaneous connection of both a composite video source (**INPUT 3**) and an S-Video source (**INPUT 4**).

If connecting a composite video source, use the Composite BNC connector ***or*** the RCA phono jack at **INPUT 3**–do not use both as inputs. See Figure 2.20.

NOTE: If you want to loop a composite signal through to another projector or display device, see ***Video Loop Through*** *later in this section.*

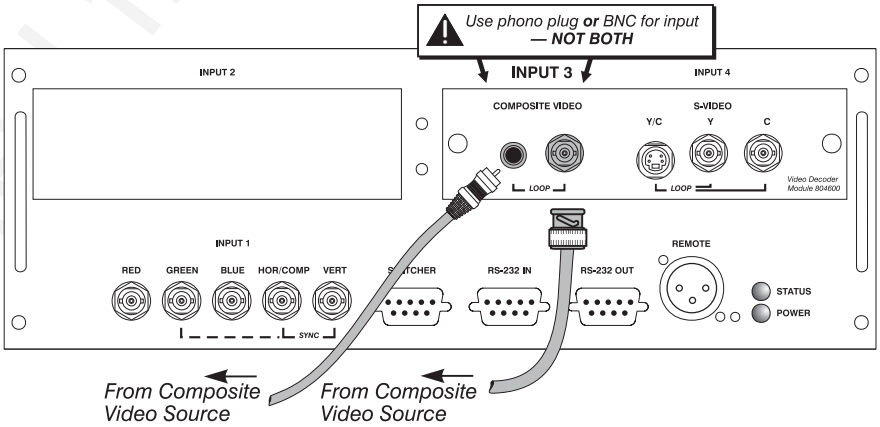

Figure 2.20. Connecting Composite Video

Downloaded from Projector.com

S-Video The video decoder input panel provides simultaneous connection of both a composite video source (**INPUT 3**) and an S-Video source (**INPUT 4**).

If connecting an S-Video source, use the 4-pin mini DIN connector ***or*** the Y and C BNC connectors (luma and chroma) at **INPUT 4**–do not use both as inputs. See Figure 2.21.

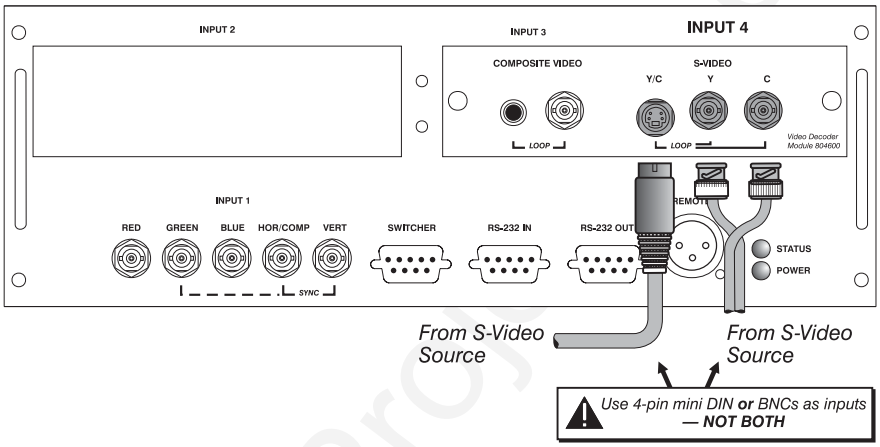

Figure 2.21. Connecting S-Video

NOTE: If you want to loop an S-video signal through to another projector or display device, see ***Video Loop Through*** *below.*

Downloaded from Projector.com

Video Loop Through

To loop a single incoming video signal input (connected at the video decoder) through to another projector or display device, use the empty connector(s) adjacent to this same input as described below.

Composite Video Loop Through

CONNECTIONS: See Figure 2.22. From your source, connect a composite video signal to **INPUT 3** using either the small phono plug or the adjacent BNC. Connect a second cable from whichever **INPUT 3** connector is free to one of the composite video inputs of the next display device or projector. Continue this looping method for each projector, using either the phono plug or the adjacent BNC as input into **INPUT 3**, then using the other connector as an output (i.e., loop through). Whether you use the BNC or the phono plug as input or output depends on the type of cable you have on hand and what type of connectors are on each end.

VIDEO TERMINATION: In the *Video Options* submenu, make sure "Video Termination" is checked for the final projector ***only***. All other projectors must have this option unchecked in order for the signal to continue. For other types of display devices in the chain, typically a "Hi-Z" switch position is needed.

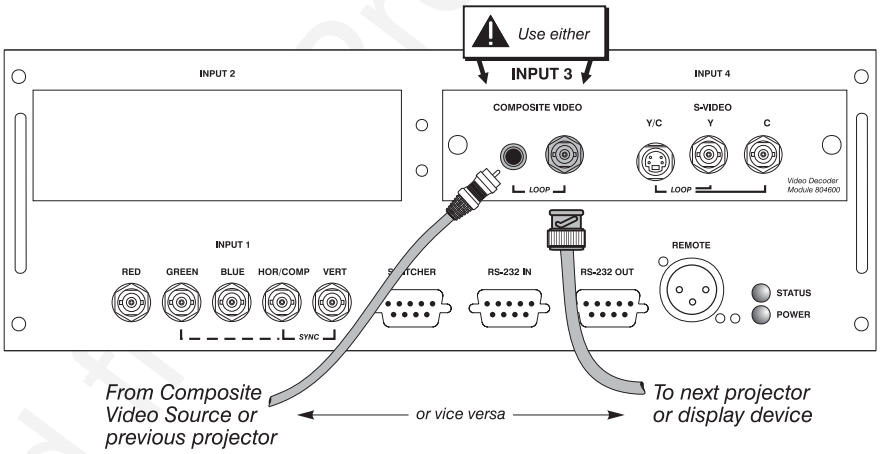

Figure 2.22. Connections for Composite Video Loop Through

S-Video Loop Through

CONNECTIONS: See Figure 2.23. From your source, connect an S-video source signal to **INPUT 4** using either the 4-pin mini DIN or the 2 adjacent BNCs labeled Y and C. Connect a second cable from whichever **INPUT 4** connector is free to one of the S-video inputs of the next display device or projector. Continue this looping method for each projector, using either 4-pin mini DIN or the 2 adjacent BNCs as input into **INPUT 4**, then using the other connector(s) as an output (i.e., loop through). Whether you use 4-pin mini DIN or the 2 adjacent BNCs as input or output depends on the type of cable you have on hand and what type of connectors are on each end.

VIDEO TERMINATION: In the *Video Options* submenu, make sure "Video Termination" is checked for ***only*** the final projector. All other projectors must have this option unchecked in order for the signal to continue. For other types of display devices in the chain, typically a "Hi-Z" switch position is needed.

Downloaded from Protocol.com

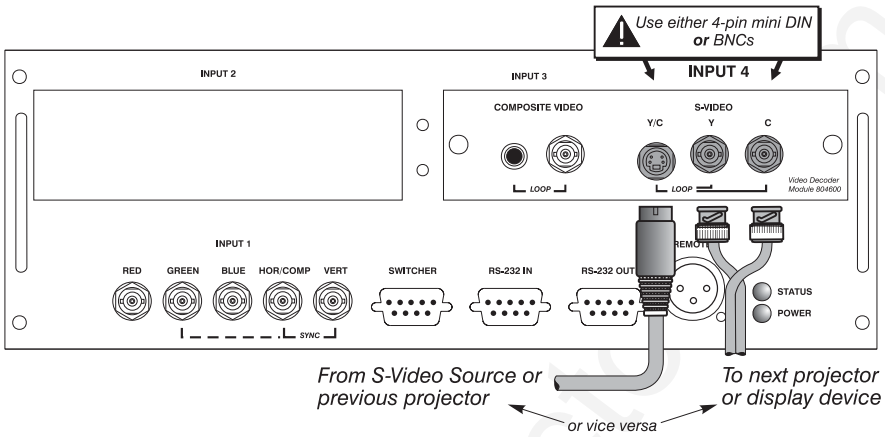

Figure 2.23. Connections for S-Video Loop Through

Extra Video – COMPOSITE OR S-VIDEO

If you want to use an extra video source in addition to the video source(s) connected at **INPUT 3** or **INPUT 4** connect either a Composite or S-Video source to **INPUT 1** as shown in Figure 2.24. Do not connect both types here simultaneously. *NOTE: For additional video inputs, install an optional Composite/S-Video Input Module at* ***INPUT 2****.*

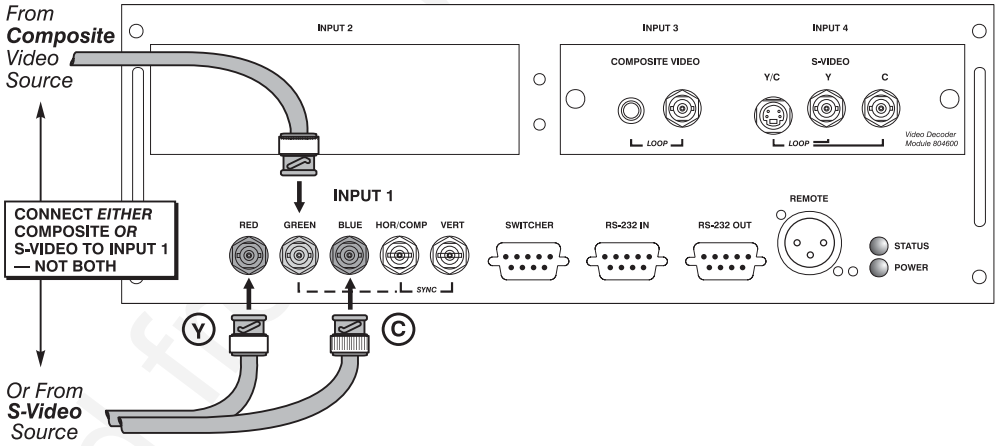

Figure 2.24. Connecting an Extra Video Source to Input 1

Optional Inputs

Optional modules allow you to increase your total number of inputs and/or accommodate different signal types, whether analog or digital. Any one of these modules can be installed in the area labeled **INPUT 2**. They include:

- RGB 500 Input Module
- RGB 400 Active Loop Thru Input Module
- RGB 400 Buffered Amplifier Input Module
- Composite/S-Video Input Module
- PC250 Analog Input Module
- Serial Digital Input Module
- Digital HDTV Module
- DVI Input Module

Alternatively, the analog interfaces (i.e., *non*-digital) can be installed in a *Marquee Case/Power Supply* or *Marquee Switcher*, if desired, and used with the projector.

NOTES: ***1)*** *Optional* ***digital*** *interfaces cannot be used in a Marquee Case/Power Supply or Switcher.* ***2)*** *Connect analog HDTV signals directly to* ***INPUT 1*** *or to any*

Downloaded from www.manualslib.com

"RBG" input module installed at **INPUT 2***—the optional HDTV Input Module used in earlier projectors is not needed or recommended . 4) See* ***Appendix F, Optional Input Modules*** *for a brief description of each interface.*

Connecting a switcher

You may wish to use one or more external *Marquee Signal Switchers* or a third party switcher in order to significantly increase the number of sources you can select. If you are using a *Marquee Signal Switcher*, connect the switcher's RGB output to **INPUT 1** and connect an RS-232 serial communication cable between the switcher and the projector serial port labeled **SWITCHER** (see Figure 2.25). The switcher communication link (permanently set at 9600 baud) enables you to access inputs connected to the switcher in the same manner as those connected directly to the projector. For most other third-party switchers, connect and access sources according to the documentation provided with that switcher.

NOTE: Make sure any Marquee Signal Switcher connected directly to the projector is set as "Switcher #1". If it is not, unplug the switcher and turn the thumbwheel to "1" before plugging back in and connecting to the projector and/or network.

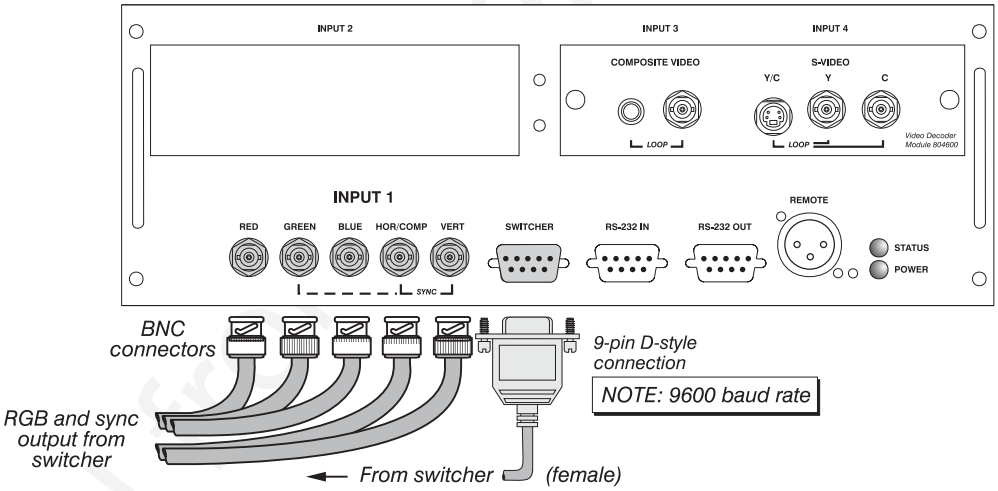

Figure 2.25. Connecting a Marquee Signal Switcher

Connecting Multiple Switchers

If you are using more than one *Marquee Signal Switcher*, daisy-chain the RS-232 switcher inputs/outputs together to form a complete network of inputs accessible from the projector (you can network up to 9 switchers), and connect Switcher #1 to the projector as shown in Figure 2.25. In addition, connect the RGB output from each switcher to its matching slot on switcher #1–for example, connect the RGB output from switcher #2 to slot #2 on switcher #1, and the RGB output from switcher #3 to slot #3 on switcher #1. Note that slots used in this manner on switcher #1 are no longer recognized as inputs to the projector–if you select a slot location that is connected to another switcher's RGB output, the projector will display the "no input signal" error message.

Downloaded from www.vandenborre.com

2.5 Power Connection

Plug the twist-locking 3-prong end of the integral line cord (30-amp, with L6-30 plug) into an appropriate grounded AC source. ***Twist to secure.*** Input voltage to the projector must be capable of supplying between 200 and 240 VAC, 50 or 60 Hz. The power source must be capable of supplying 2800 watts of power to the projector. See *Section 5, Specifications* for complete power requirements.

⚠ WARNING ⚠

Do not attempt operation if the AC supply is not within the specified voltage and power range.
Do not alter the line cord.

⚠ ***Caution:*** *Once the projector is turned off, the lamp cooling fans will continue to run for approximately five minutes to ensure that the projector and lamp have sufficiently cooled, at which point the fans will automatically shut off. To avoid thermal stress to the lamp, never unplug the line cord while the lamp cooling fans are running. It is recommended that the main AC I/O switch (circuit breaker) remain in the ON position at all times.*

2.6 Operating Orientation

The projector is set up at the factory for use in a front screen, floor mount orientation. If your initial installation is ceiling mount or rear screen, displayed images may be upside down and/or reversed. To correct, you must change the image orientation from within the *Menu Preferences* menu (you may prefer to do this before installing the projector in its final position/orientation).

In the *Menu Preferences* menu, highlight and select the "Image Orientation" pull-down list. Select from Rear, Inverted Rear, Front or Inverted Front according to your intended installation. See *Section 3, Operation* for further information.

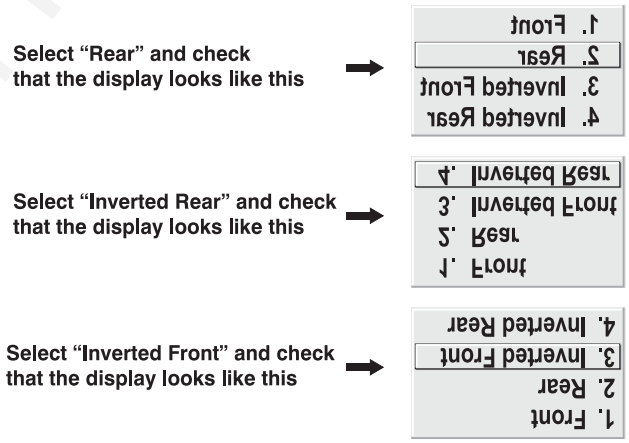

2.7 Leveling

For most installations, the lens surface of the projector is parallel to the screen—this prevents major keystoning of the image (i.e., an image with non-parallel sides). In addition, the projector must be kept level from side-to-side in order for the lamp to function safely. To make small corrections to the projector's level, rotate each leg as necessary to raise or lower. For angled installations, see *"Special Mounting"* under *2.3, Projector Position and Mounting* earlier in this section. To adjust keystoning through software, see *Section 3*.

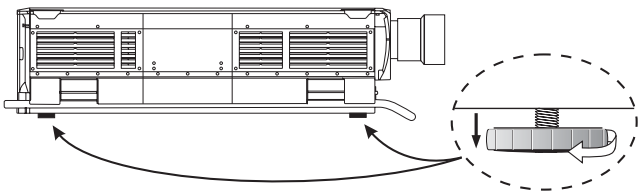

Figure 2.26. Adjusting the Feet Height

Downloaded from Projector.com

2.8 Zoom, Focus & Lens Offset

Once the projector is properly set up and projecting an image, you are ready to make quick adjustments of the motorized lens. Lens control is accessed by pressing the Lens key on one of the keypads, which will display the *Lens Control* menu of options.

*NOTE: Refer to **Section 3** if you need help in navigating the menu.*

Zoom ' If you have a zoom lens installed, adjust the zoom slidebar in the *Lens Control* menu to increase or decrease the size of your image at the current throw distance.

Focus ' In the *Lens Control* menu, adjust the focus slidebar until you obtain the best overall image clarity.

Lens Offset To ensure that the image is positioned as desired, adjust either or both offset slidebars in the *Lens Control* menu. Try to achieve the desired overall image position and best brightness while obtaining a rectangular image. If the brightness looks uneven, or the edges do not look perfectly straight, the projector may not be in the optimal position for your screen. See *2.3, Projector Position and Mounting* for full details about lens offset ranges for specific lenses and projector models.

Further display adjustments are available through keypad commands and on-screen menus—refer to *Section 3, Operation*.

2.9 Serial Port Connections

NOTE: Communication software is required for serial control. Contact your dealer for details.

You may wish to use equipment other than the keypad for controlling the projector or for performing other special functions. Such equipment—such as most personal computers—requires a serial interface for sending and receiving communications through the serial ports on the projector. Note that there are two different types of serial communication ports on this projector as described below.

If using a computer ' ***RS-232 Ports***

From most computers, connect an **RS-232** serial communication cable between the computer and the projector serial port labeled **RS-232 IN**—this 9-pin D connector port is located near the bottom center of the projector's front control panel (see Figure 2.27). Then set the projector baud rate to match that of the computer (changing the baud rate is described in *3.7, Configuring System Parameters*).

*NOTE: Refer to **Appendix D** for complete cable wiring details.*

Downloaded from Projector.com

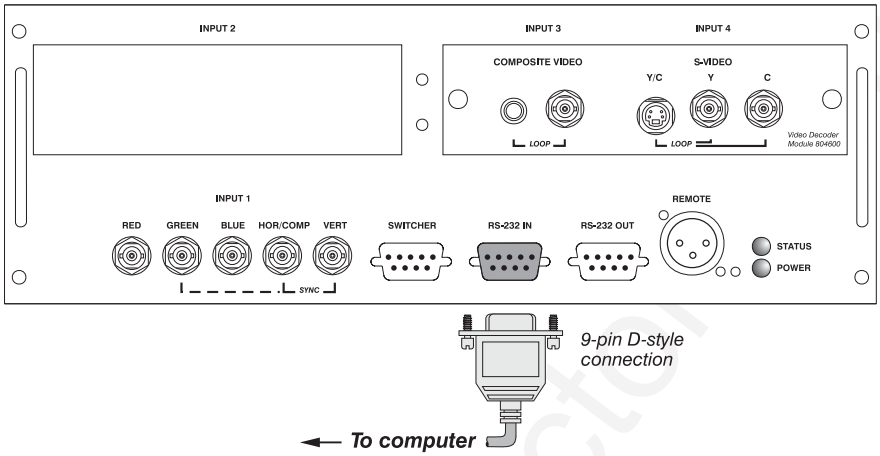

Figure 2.27. RS-232 Serial Connection to a Computer

RS-422 Ports

Some computers can provide **RS-422** serial communications (often through a plug-in adapter or external converter) rather than the more common RS-232. RS-422 communication has differential "transmits-and-receives" and is generally better suited for long distances than is RS-232 communication. RS-422 is not compatible with RS-232—connecting one to the other could damage the equipment at either end.

If you wish to control the projector with a computer and/or other controlling device (such as the *Two-Way Controller*) having RS-422 capability, connect **RS-422** serial communication cables between the computer (or other device) and either (or both) of the projector serial ports labeled **RS-422**—these 6-pin XLR connector ports are located near the upper right corner of the projector's front control panel (see Figure 2.28). Use an **RS-422** port ***only*** if your equipment has RS-422 capability—always first consult the documentation supplied with your equipment.

IMPORTANT!

Use the RS-422 port **ONLY** if your system supports RS-422 serial communications. Connecting to the RS-422 port with incompatible equipment may **DAMAGE** the equipment.

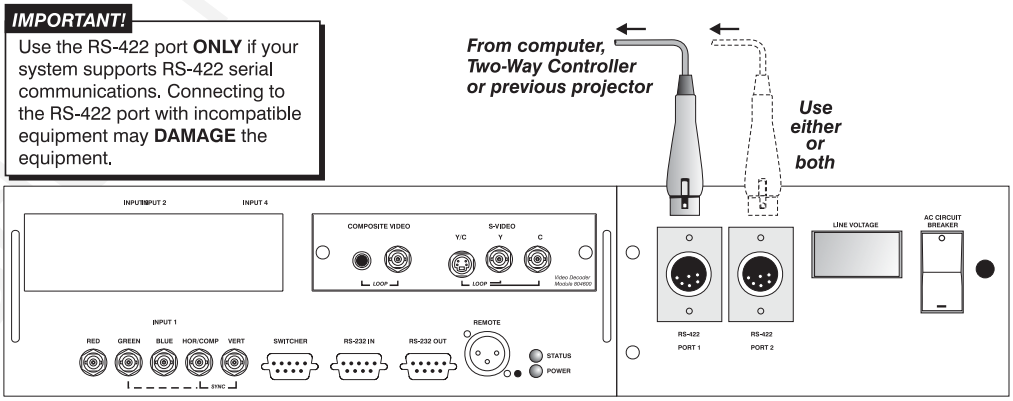

Figure 2.28. RS-422 Serial Connection to a Computer

⚠ WARNING ⚠

Do not use an RS-422 port unless you are using a computer with RS-422 capability. The voltage levels of this signal can damage incompatible equipment.

If using a switcher ' You may wish to use one or more external *Marquee Signal Switchers* or a third party switcher in order to significantly increase the number of sources you can select. If you are using a *Marquee Signal Switcher*, connect the switcher's RGB output to

Downloaded from Projector

INPUT 1 and connect an RS-232 serial communication cable between the switcher and the projector serial port labeled **SWITCHER** (refer back to Figure 2.25). The switcher communication link (permanently set at 9600 baud) enables you to access inputs connected to the switcher in the same manner as those connected directly to the projector. For most other third-party switchers, connect and access sources according to the documentation provided with that switcher.

*NOTE: See 2**.4, Source Connections**, **"Connecting a Switcher"** for complete details.*

If using multiple projectors

Serial Communications

RS-232 NETWORK: To control multiple projectors with a computer/controller having an RS-232 interface, first set them all to the same baud rate needed, then chain the projectors together by connecting the **RS-232 OUT** connector of the first projector (already connected to the computer/controller) to the **RS-232 IN** connector of the next projector in the chain.

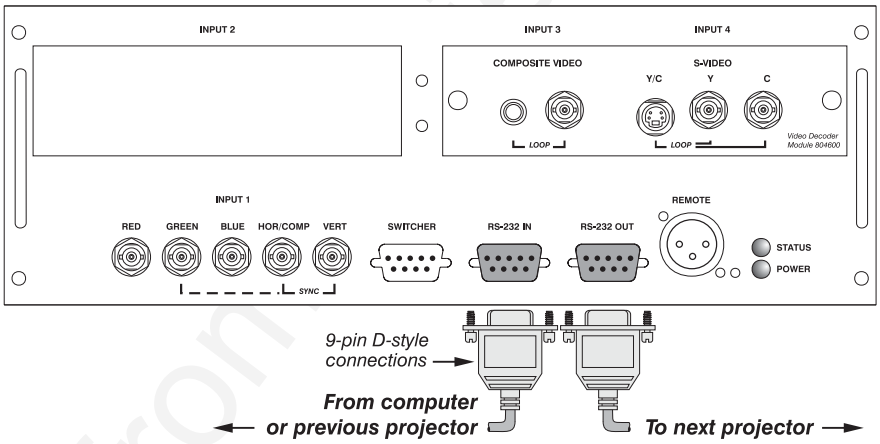

Figure 2.29. Adding Another Projector via RS-232

RS-422 NETWORK: To control multiple projectors with a computer/controller having an RS-422 interface, first set them all to the same baud rate needed, then chain the projectors together by connecting the **RS-422 PORT 2** connector of the first projector (already connected to the computer/controller) to the **RS-422 PORT 1** connector of the next projector in the chain.

IMPORTANT!
Use the RS-422 port **ONLY** if your system supports RS-422 serial communications. Connecting to the RS-422 port with incompatible equipment may **DAMAGE** the equipment.

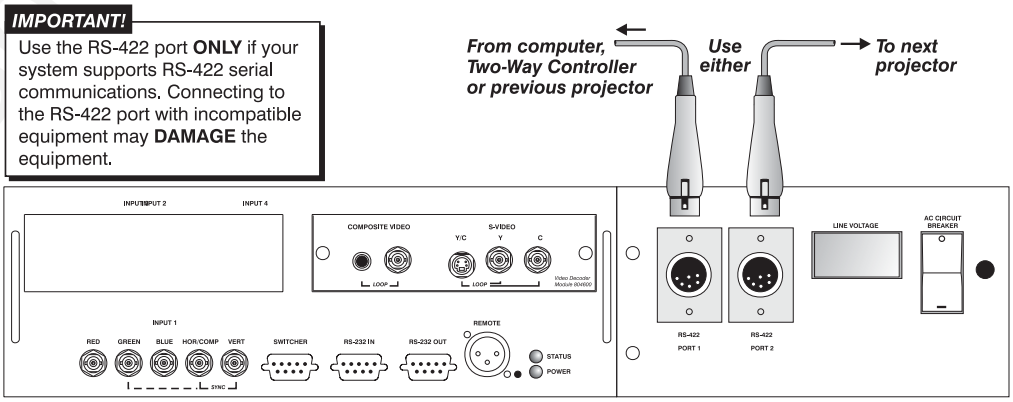

Figure 2.30. Adding Another Projector via RS-422

Downloaded from Projector.com

For either type of network, continue connecting projectors in this manner until you've reached the last projector in the chain, so that only the last projector has an empty **RS-232 OUT** (or **RS-422 PORT**, if applicable). See examples below.

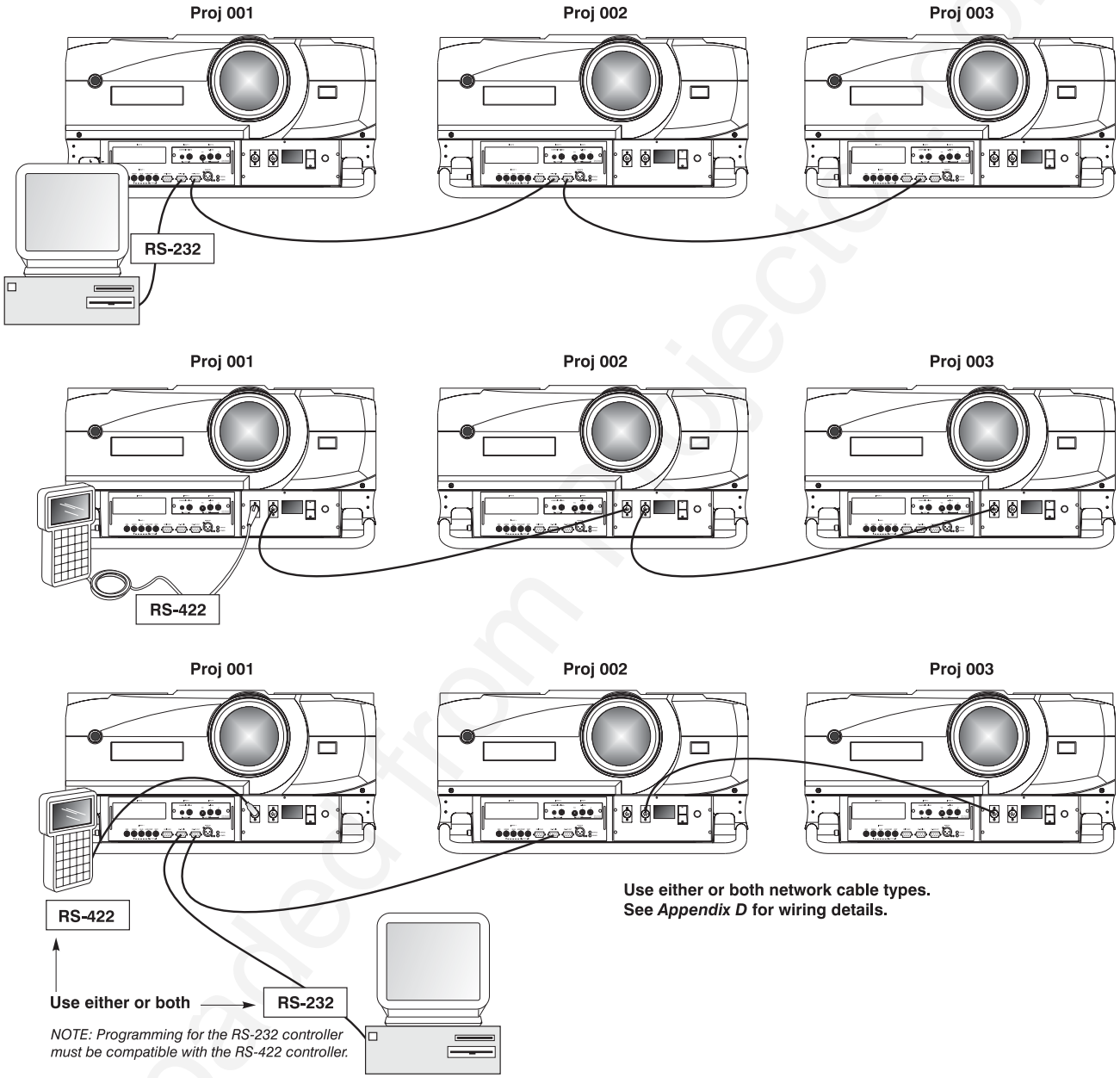

Figure 2.31. Assorted Networks

Note that communication parameters such as baud rate must be set to match the particular controlling device ***before*** connecting as a network—refer to the documentation that came with your controlling device in order to determine the proper baud rate. See *3.7, Configuring System Parameters* if you need help changing the projector baud rate from its default of 19200.

NOTES: ***1)*** *To avoid damage, connect only properly wired serial communication cables. See* ***Appendix D*** *for details.* ***2)*** *It is recommended that each RS-232 communication cable be no more than 25 feet in length. Use high quality cables.*

Downloaded from Projector.com

Back-up or "Split" Networks

In a typical network, broadcast serial communications or messages destined for a specific projector travel through *all* serial ports in each projector regardless of whether the messages originate from an RS-232 or RS-422 source (refer back to Figure 2.31, bottom example). The communication path depends on the serial cabling connected at each projector.

You may prefer the option of two *separate* communication paths—RS-232 *or* RS-422—in your network, essentially creating a redundant "back-up" communication path that can take over should a failed projector (or controller) prevent communications via the other path. For this setup, connect each projector to the next using *both* RS-232 and RS-422 ports.

Then enable the "Split Network" setting in the *Communications* menu for each projector present so that RS-232 communications remain on RS-232 paths only and RS-422 communications remain on RS-422 paths only (Figure 2.32). Each projector can then receive and send either type of message depending on which controller initiates the commands—should one path fail, the second "back-up" network path can be used. Only one network should be active at a given time, as determined by the controller (whether it is RS-232 or RS-422). *Note that the "Broadcast Key" option is OFF.*

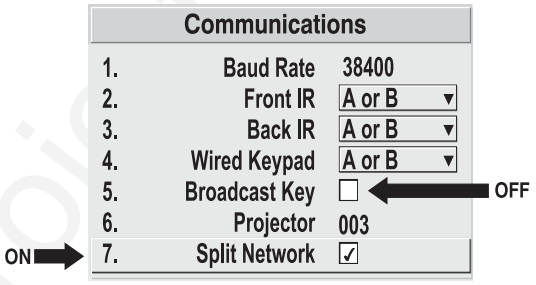

Figure 2.32. Enable "Split Network"

⚠ IMPORTANT ⚠

Whenever downloading new projector software to networks, use a single-route network only. DISCONNECT any redundant serial cabling and UNCHECK the "Split Network" checkbox for each projector.

Two Different "Splits"

There are two different split network configurations possible (Figure 2.33). Set up whichever option best suits your application needs:

A. SPLIT NETWORK WITH ONE CONTROLLER– If you have a single controller and want a back-up serial link, connect one controller standard (e.g., RS-232) to one physical end of the network and the other controller standard (e.g., RS-422) at the other physical end of the network. Make sure the "Split Network" option is enabled in the *Communications* menu. If a projector should then fail anywhere in the network, communication with the remaining projectors can be resumed in the opposite direction using the other standard. *NOTE: This configuration requires that both standards be available from a single controller, or that you use an RS-232/RS-422 adapter.*

B. SPLIT NETWORK WITH TWO CONTROLLERS– If you have two controllers (one RS-232 and one RS-422) and want one to be a back-up, connect each controller to the appropriate port on the first projector in the network. Then connect projectors together using both RS-232 and RS-422 ports as shown. Make sure the "Split Network" option is enabled in the *Communications* menu. Now, if either controller fails, you can simply switch to the other controller and communicate via the other standard.

Downloaded from Projector.com

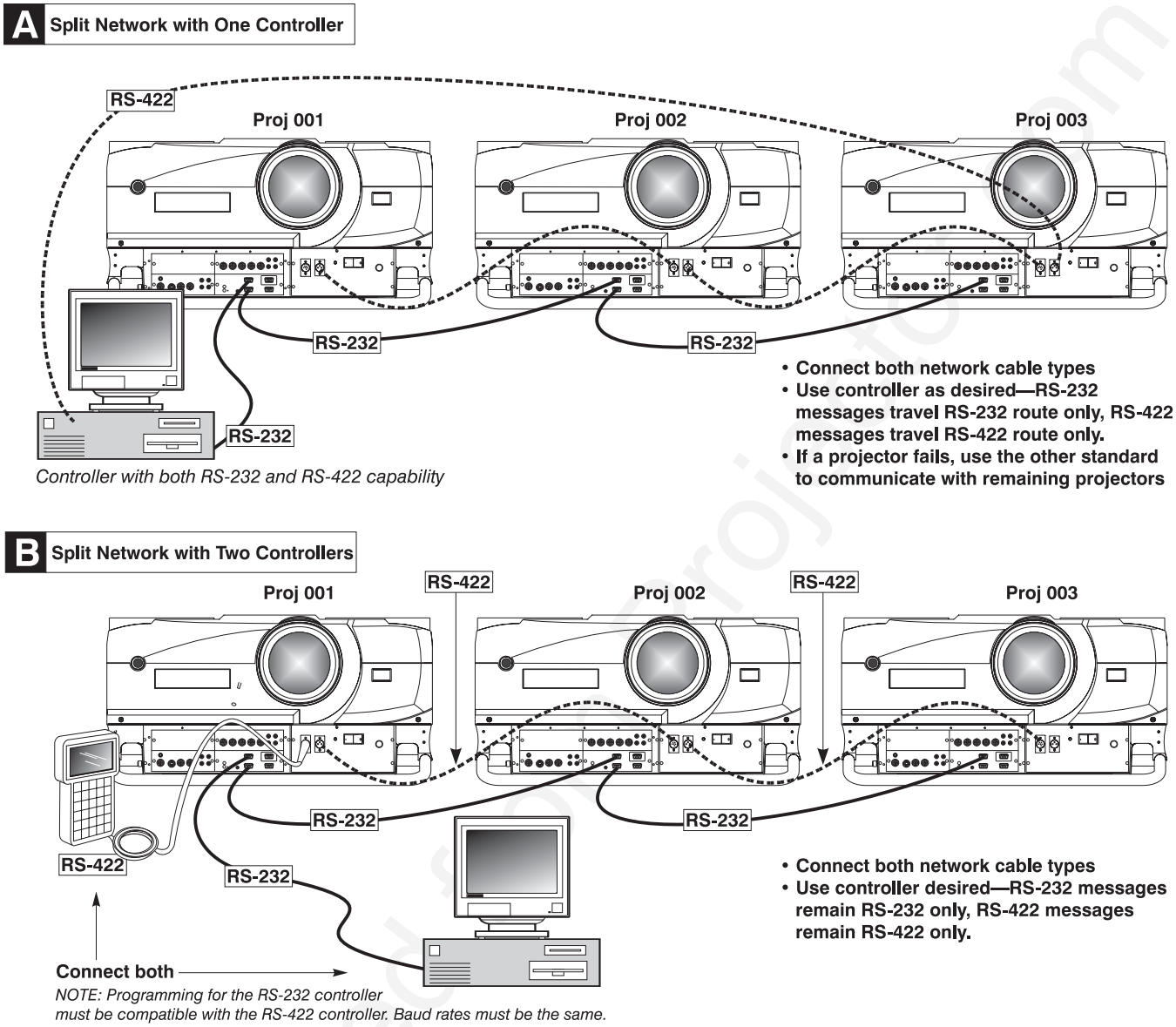

Figure 2.33. Two Types of Split Networks

Projector Numbers

Each projector can be assigned a unique 3-digit projector number (for example, 001). These numbers are necessary when you are working with multiple linked projectors, enabling you to direct commands to a certain projector rather than always broadcasting to the entire network. For complete information on how to assign projector numbers, see *3.7, Configuring System Parameters*.

NOTE: To loop a single incoming video source through to another projector or display device on a network, see ***Video Loop Through*** *in* ***2.4, Source Connections****.*

2.10 Keypad Protocols and Conversion

At manufacture every keypad is assigned “A” as its default protocol, which is simply a collection of settings that determine how the keypad operates. Once assigned, this protocol remains in effect until it is changed—that is, the keypad will operate as it currently does until you change its protocol.

Downloaded from projectorcentral.com

Protocols are most useful for multiple-projector applications. For example, you might want to change a keypad protocol if you are working with two projectors and two remote keypads in the same room and need to control each projector independently (Figure 2.34). When Keypad A has a different protocol than Keypad B, each keypad communicates *only* with the projector having a matching protocol. Or, if you have a network of two or more projectors connected together via RS-232 serial ports, you may want only certain projectors to respond to a wired keypad, thus you can use different protocols to limit responses.

NOTE: Matching the protocol on the projector to that of a keypad is done through a setting in the ***Communications*** *menu. See* ***3.7, Configuring System Parameters*** *for further information on how to change the projector's infrared sensor (rear and front) protocol.*

A protocol for either type of remote keypad — IR or wired — can be changed through software commands entered on the keypad. A new protocol set through software commands remains in effect until the keypad batteries are removed and replaced (if an IR remote), or until the keypad is unplugged (if a wired remote). A remote can also be changed manually —you can "hard-wire" new jumper settings inside the keypad so that they remain in effect until you change the hard-wiring. Note that a hard-wired protocol can be temporarily overridden by the software protocol change, effective until the keypad is unplugged and plugged in again (if a wired remote) or until a battery is removed (if an IR remote).

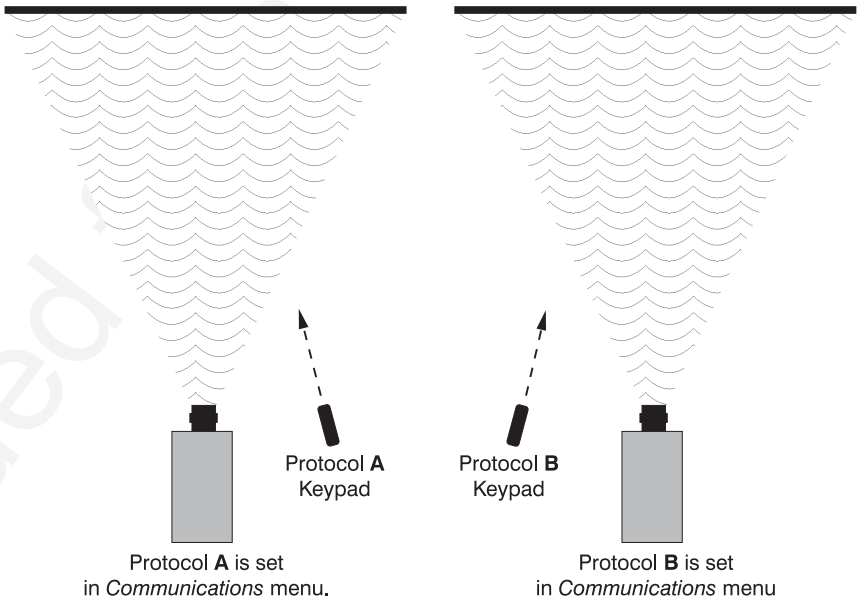

Figure 2.34. Independent Keypads and Projectors

Remote Keypad Protocol
— IR OR WIRED KEYPAD —

The standard IR remote keypad or the optional wired remote can be set to one of two different protocols — "A" or "B". To hard-wire a protocol to "A" or "B" in either remote, follow Steps 1 through 5:

Step 1

Unplug the keypad from the projector (applies to wired remote only).

Downloaded from Projector.com

Step 2

Unlatch and open the empty battery compartment on the back of the keypad as shown in Figure 2.35.

NOTE: A wired keypad opens as shown, but a cable passes through the battery compartment cover.

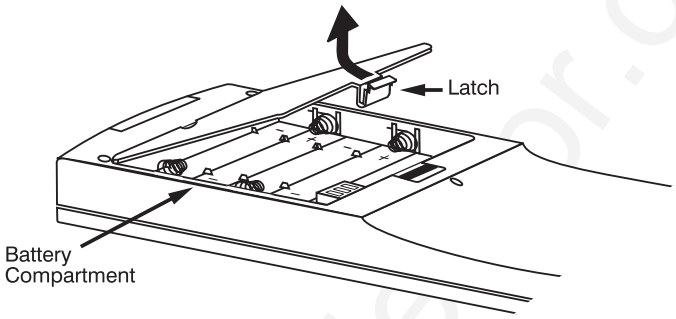

Figure 2.35. Opening the Keypad

Step 3

Find the 4 jumpers located along the latching side of the battery compartment. These jumpers set the keypad protocol and other settings so that the keypad functions in a certain manner.

Step 4: Set the Jumpers

Set the jumpers as shown in Figure 2.36. Take care to refer to the correct part of the drawing — IR or wired (optional). Use tweezers or needle-nose pliers to remove and replace each jumper as necessary.

- **J1** jumper: For either remote, set between pins 1 and 2 to set as Protocol “A”. Set between pins 2 and 3 to set as Protocol “B”.
- **J2** jumper: For either remote, set between pins 2 and 3 as shown; otherwise, the projector will not respond correctly to keypad commands.
- **J3** jumper: For the IR remote, make sure that the jumper is set between pins 2 and 3 as shown. For the wired remote, make sure that the jumper is set between pins 1 and 2 as shown.
- **J4** jumper: For the IR remote, make sure that the jumper is set between pins 1 and 2 as shown. For the wired remote, make sure that the jumper is set between pins 2 and 3 as shown.

Downloaded from Projector.com

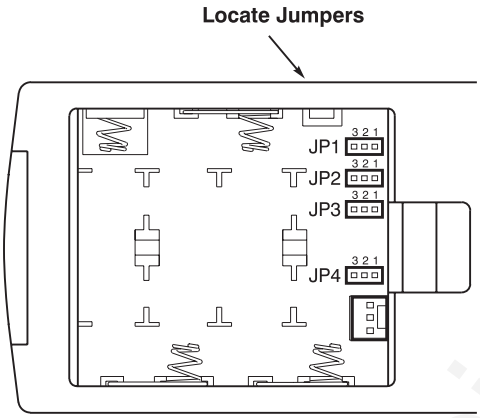

IR Remote Keypad:

JP1	3 2 1 = PROTOCOL **A** *-or-* 3 2 1 = PROTOCOL **B**
JP2	3 2 1 (ALWAYS)
JP3	3 2 1 IR
JP4	3 2 1 WIRED KEYPAD

Wired Keypad:

JP1	3 2 1 = PROTOCOL **A** *-or-* 3 2 1 = PROTOCOL **B**
JP2	3 2 1 (ALWAYS)
JP3	3 2 1 IR
JP4	3 2 1 WIRED KEYPAD

Figure 2.36. Locating and Setting the Jumpers

Step 5

Replace battery compartment cover. Plug into projector (wired keypad only) and test.

NOTE: A wired keypad can be converted into an IR remote keypad, and vice versa. Follow the settings shown above, adding or deleting the cable and batteries as required. The cable with 3-pin XLR connector is available separately from your dealer.

SHORTCUT METHOD:

You can also issue software protocol settings through the keypad. These software commands will be lost when the keypad is either unplugged or when a battery is removed — the keypad will revert back to the hard-wired jumper settings (see above) until you enter the software commands again.

Press [Input1] [Color] [Pixel] [Position] [1] = Protocol "**A**"

Press [Input1] [Color] [Pixel] [Position] [2] = Protocol "**B**"

NOTE: If you change any keypad to a new protocol and the projector stops responding, the projector may be set to a conflicting protocol. Use the projector's built-in keypad to access the ***Communications*** *menu. Under "Front IR" or "Back IR" or "Wired Keypad", select the protocol that matches the new protocol of the keypad at hand. The projector should now respond properly.*

Downloaded from Projector.com

Converting a Keypad

If desired, you can convert an IR remote keypad into a wired remote keypad and vice versa.

TO CHANGE FROM INFRARED TO WIRED:

- Remove battery compartment cover from back of keypad.
- Remove batteries.
- Wait 1-2 minutes.
- Plug the keypad cable (available separately) into the empty battery compartment. Make sure that the battery cover is notched smoothly to accommodate the cable without pinching it.
- Set keypad protocol as desired, using “wired” jumper settings.
- Replace battery compartment cover.
- Plug into the 3-pin XLR port at the front panel of the projector.

TO CHANGE FROM WIRED TO INFRARED:

- Unplug the keypad from the projector.
- Open the keypad back and unplug the keypad cable.
- Wait 1-2 minutes.
- Install batteries (see *Section 4*).
- Set keypad protocol as desired, using “IR” jumper settings.
- Replace battery compartment cover.

Downloaded from Projector.com

Downloaded from Projector.com

Section 3

Operation

3.1 Overview

This section explains how to use the projector once it has been installed. Please read through these pages before using the projector for the first time. A good understanding of projector features and how to access them will help you to take full advantage of the capabilities of the projector within minutes.

NOTE: Installation involves locating the projector and adjusting it for use at that location. If you have not yet installed the projector, refer to ***Section 2, Installation and Setup****.*

3.2 Projector Basics

Most projector functions and adjustments are entered through keypad commands that either control the projector directly or activate a system of intuitive menus. Variations in settings can be defined and retained in the projector's internal memory as a custom *channel*, with up to 99 different channels possible.

Components and functions are illustrated on the following page.

Downloaded from Projector.com

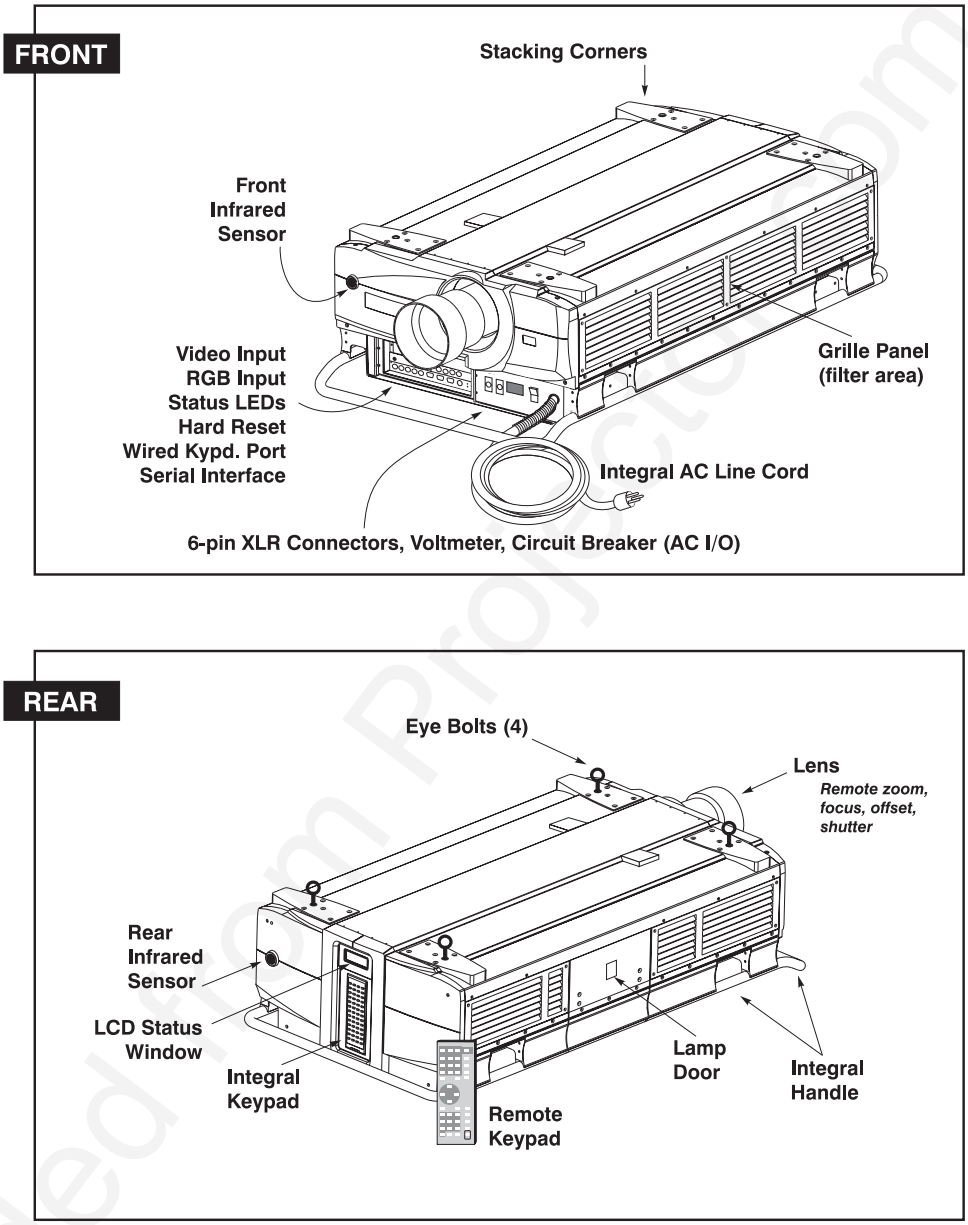

Figure 3.1. Basic Projector Components

Components / Features

REMOTE ZOOM **-** Accessed via the Lens key on the keypad, the lens barrel of a motorized zoom lens (optional) rotates to adjust the size of the image at the current throw distance. Minimum and maximum image sizes depend on which zoom lens is installed — see *Section 5, Specifications.* To adjust zoom manually, remove the zoom adapter collar (see *Section 4, Maintenance*) and turn the textured zoom ring by hand.

REMOTE FOCUS **-** Accessed via the Lens key on the keypad, focus adjusts the sharpness of the image at the current throw distance. Focus cannot be adjusted manually.

REMOTE LENS OFFSET **–** Accessed via the Lens key on the keypad, vertical and horizontal offsets shift the lens and move the image up or down and left or right. See

Downloaded from Projector.com

Section 2, Installation and Setup for an illustrated explanation of offset ranges for all lenses. Ranges are also listed on page 5-1. Offsets cannot be adjusted manually.

REMOTE CONTROL SHUTTER - Closing the shutter blocks the lens internally and turns the image to off. Although the lamp remains “on”, its output is reduced to prevent heat build-up. The shutter is controlled via Shutter* on the keypad.

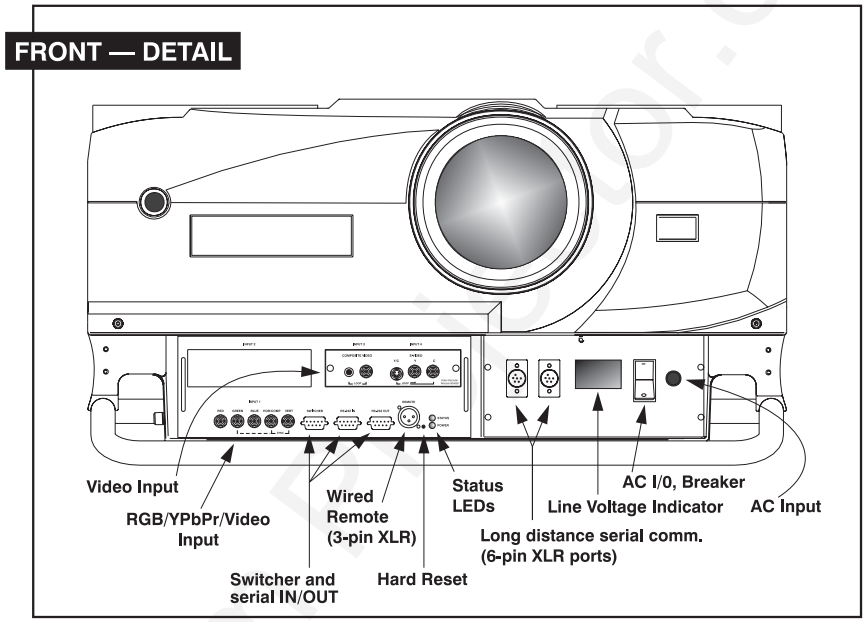

COMPOSITE/S-VIDEO INPUT - Accepts a composite video and S-Video signal from devices such as VCRs.

RGB INPUT - Accepts RGB and sync signals from devices such as computers, as well as composite video, S-Video or YPbPr component signals.

RS-232 SERIAL INTERFACE (WITH LOOP THROUGH) - Allows one or more projectors to be remotely controlled by a computer or controller, and provides a communications connection for *Marquee Signal Switchers*.

RS-422 SERIAL INTERFACE (WITH LOOP THROUGH) - Allows one or more projectors to be remotely controlled by an RS-422 compatible computer or controller (such as the *Two-Way Controller* accessory). RS-422 communications can travel greater distances than can RS-232 communications, and require RS-422 compatible equipment.

⚠ ***AC LINE CORD INPUT -*** The projector requires AC power of 200 to 240 VAC, 50 to 60 Hz (15 amps @ 200 VAC). Always use the projector’s integral line cord, and never alter this cord or plug. See complete power specifications in *Section 5*.

⚠ WARNING ⚠

Do not attempt operation if the AC supply is not within the specified voltage and power range.

STATUS/POWER LEDS - Two LEDs (light emitting diodes) located in the lower right corner of the front connector panel indicate projector "Status" (top) and "Power" (bottom). During normal operation, the "Power" light is steady green and the "Status" light flashes green each time a key is pressed or when the projector receives a serial command. Use the following as a guide:

Downloaded from Projector.com

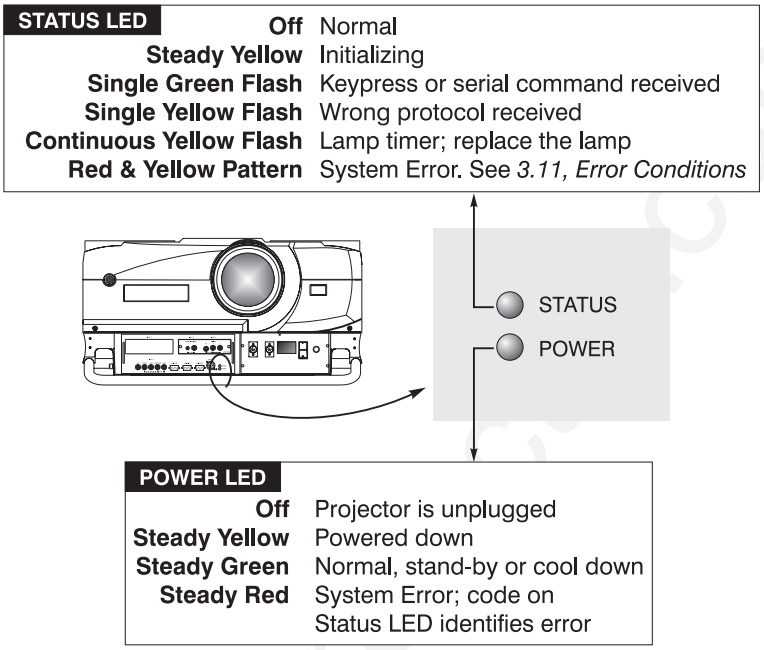

Figure 3.2. Reading the Status LEDs

NOTE: A steady red power light accompanied by a coded pattern of red and yellow flashes from the status light indicates an internal system error. Consult the rear LCD display for an explanation, and see ***3.11, Error Conditions****. If the problem persists, contact a qualified service technician available through your dealer.*

AC ON/OFF (20 A CIRCUIT BREAKER) – Detects faulty AC and automatically shuts down the projector to prevent damage. Keep the switch in the ON position so that AC will reach the projector, as indicated by the adjacent Line Voltage Indicator—you will then be able to power the projector on/off by using the Power* key. If the AC switch moves to the OFF position during operation, the projector will power off—restart by first moving the AC switch back to its ON position, then try powering up as usual (press Power*). If the breaker continues to "trip" (move to OFF), the projector will remain inoperable until your AC problem is corrected. It is recommended that the switch remain in the ON position at all times. Turn the projector off with the AC switch only if the fans have stopped, typically about 5 minutes after powering off with Power* key.

LINE VOLTAGE INDICATOR (VOLTMETER) – During operation, this window displays the number of AC volts the projector is receiving from the AC source. The window is dark only when **1)** the projector is unplugged or **2)** there is no incoming AC, due to the AC on/off switch being set to OFF or **3)** improper AC (inadequate, excessive or faulty) has automatically triggered the circuit breaker to open, causing a shutdown of the projector. Monitor and make sure the display reads within the acceptable AC range (see *Section 5*) at all times.

WIRED REMOTE KEYPAD CONNECTOR (3-pin XLR) - For optional tethered remote control of the projector.

BUILT-IN KEYPAD - Alternative location for entering commands that control projector performance.

LCD STATUS DISPLAY – Visual feedback for monitoring projector activities and status.

INFRARED SENSORS - The infrared (IR) sensors on the front and rear of the projector receive infrared signals from the IR keypad for remote control of projector functions. For proper operation make sure that these sensors are not blocked.

HARD RESET - Emergency access for powering down the projector in the event of a system failure. Insert a pen point or very small screwdriver.

EYEBOLTS – Screw eyebolts into 4 corner holes (top or bottom) to hoist or suspend a projector. See *Section 2* for details.

SIDE HANDLES - For safety straps when hoisting, or for brief hand transport.

STACKING CORNERS - For secure stacking of projectors on the floor (maximum of three high). *NOTE: All other stacking configurations require a separate hardware accessory kit. See* ***Section 2***.

⚠ WARNING ⚠

When hoisting or stacking projectors, use Christie stacking hardware (available separately).

LAMP DOOR - For access/replacement of the interior lamp module. *NOTE: Lamp replacement requires a qualified service technician.*

FILTER SIDE GRILLE - Louvered grille for air intake. Remove to replace air filters.

3.3 Using the Keypad

The keypad appears in three locations:

- ***Built-in*** to the rear of the projector
- ***Infrared (IR) Remote*** for tetherless control up to 100 feet away
- ***Wired Remote*** (optional) tethered to the front of the projector

While each keypad is identical in layout and provides complete control of the projector, you may find one keypad more convenient than another for your specific installation and application.

Downloaded from Projector.com

Built-in ' The built-in keypad is located at the rear of the projector. An LCD window above this keypad provides feedback regarding current status and activities of the projector.

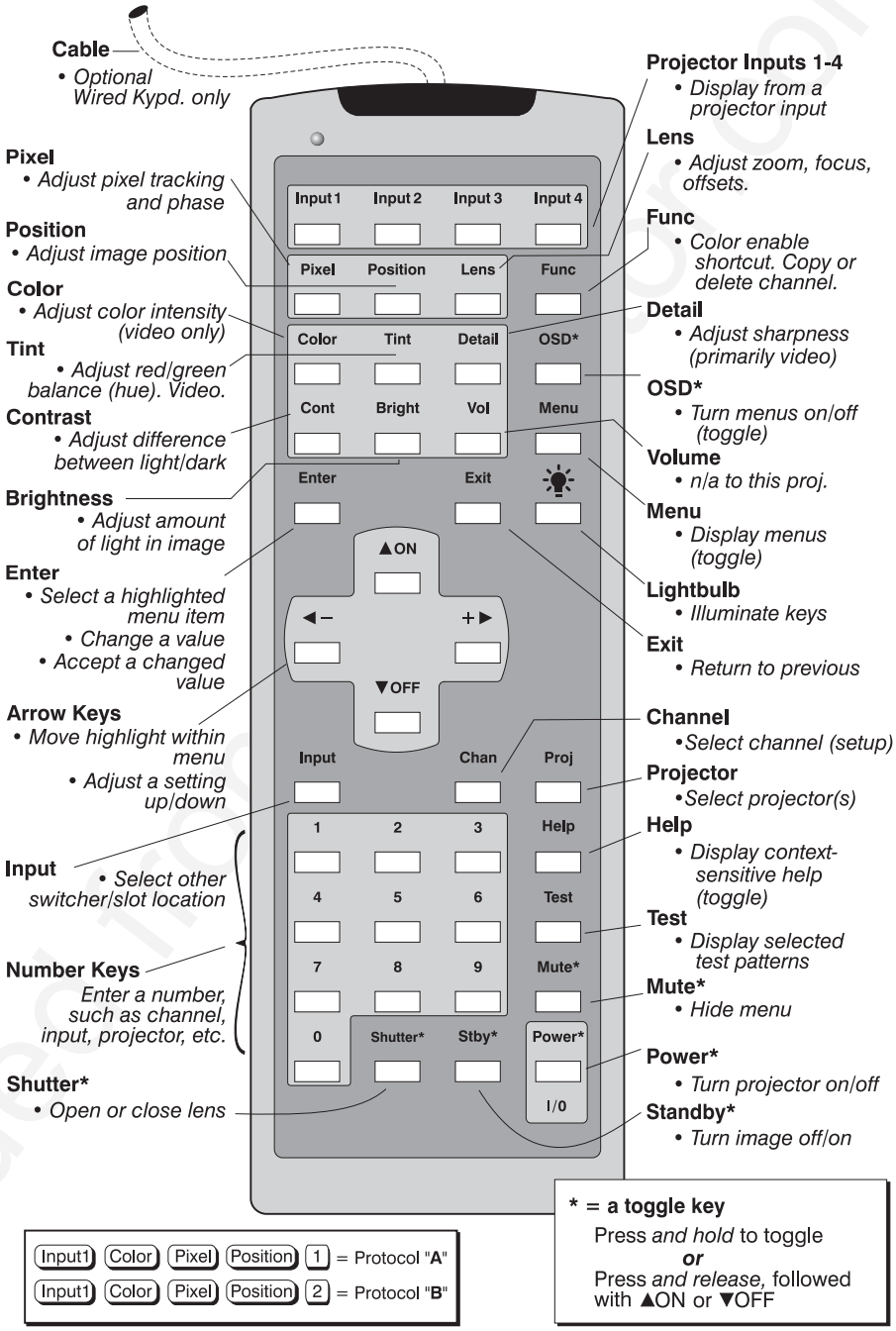

Figure 3.3. Keypad

IR Remote ' The IR Remote Keypad controls the projector by way of wireless communications from a battery-powered infrared (IR) transmitter. Use the IR remote keypad the same way you would use a remote keypad supplied with a TV or VCR. When making key presses, direct the keypad either toward the screen or toward the front or rear of the projector. One of two sensors on the projector will detect the signals and relay the commands for internal processing.

Downloaded from

Wired Remote —OPTIONAL—

The wired remote keypad connects to the 3-pin XLR jack via a 50 ft. cable. It is recommended when:

- the rear keypad is inaccessible
- the lighting conditions are unsuitable for proper IR transmission
- you want to use a separate keypad for each projector in a group

*NOTES: **1)** For extra long distances and/or harsh environments, you may prefer to use an optional remote **Two-Way Controller** to control the projector. For operating details, please see the **Two-Way Controller User's Manual** included with this accessory. **2)** Old VistaGRAPHX "Roadie style" keypads can be used with this projector, but most [Func] key codes listed on the back are different and do not apply.*

Guide to Keypads

Keep in mind the following guidelines:

1) Press keys one-at-a-time; there are no simultaneous key presses required.
2) For any key having an "*" ([Power*], for example), hold the key for approximately 1 second in order to toggle the function with a single key press. For other keys (or to use a "*" key in conjunction with [▲ON] or [▼OFF]), a momentary press similar to a mouse click is sufficient.
3) Press the "lightbulb key" to temporarily illuminate the backlight for the keys without sending any other command.
4) [◄–], [+►], [▲ON] , and [▼OFF] repeat their "arrow" actions when held down. For other keys, release and press again to repeat an action. In a serial network, pause briefly between adjustments to ensure that more distant projectors can "keep up" with the commands.
5) If you press a key while the projector is busy with another action, such as during a power-up, the key press may not take effect.

When you turn on the projector it begins operating at *presentation level*, such as an image from the most recently used source signal. The projector temporarily leaves presentation level whenever you use the keypad to work with control settings, display menus, or on-line help. For example, pressing [Menu] after startup displays the main menu — presentation level is no longer active, although the image still appears in the background. Press [Menu] again (or [Exit]) to return or leave the menu system and return to presentation level.

Keypad Commands

Specific keypad commands are explained below:

[Power*] **Power ON/OFF**

Press and hold for approximately 1 second to turn the projector on or off with a single key press (note the AC I/O switch must be on). Or press [Power*] followed immediately by [▲ON] or [▼OFF] if you want to guarantee the correct toggle (useful if you are unsure of the present status).

*NOTES: **1)** Whenever the projector is turned off, the lamp cooling fans remain on for about five minutes to cool the lamp. **2)** It is a good idea to avoid turning a projector back on until it has been off for a few minutes. Hot re-strikes of the lamp may reduce lamp life. **3)** Do not turn off with the AC I/O switch.*

[Input1] **Input 1**

Press [Input1] to select the source connected to **INPUT 1** on the projector (data input). This is the same as entering [Input] [0] [1] .

Downloaded from Projector.com

Input2 *Input 2*

Press Input2 to select the source connected to **INPUT 2** on the projector (an optional interface). This is the same as entering Input 0 2 .

Input3 *Input 3*

Press Input3 to select the source connected to **INPUT 3** on the projector (composite video). This is the same as entering Input 0 3.

Input4 *Input 4*

Press Input4 to select the source connected to **INPUT 4** on the projector (S-Video). This is the same as entering Input 0 4.

Input *Input*

Press Input n n when you want to display from a specific source location, such as a switcher connected serially to the projector's switcher port. The first digit represents the number you have assigned to your switcher (usually 1-9, or "0" for one of the four inputs on the projector). The second digit represents the switcher's slot number (1-9). For example:

Input 1 2 = display data from switcher 1, slot 2.

NOTES: 1) Although you don't need to use the input key unless a switcher is connected to the projector, you can also use Input *to access the four input "slots" on the projector itself: use* 0 *as the first digit (representing the projector as the switcher), then* 1, 2, 3 *, or* 4 *as the second digit (the desired input slot number).* 0 *in combination with higher numbers is an invalid entry. 2) See* ***3.5, Using Channels and Inputs*** *for a detailed explanation of inputs.*

NOTE: Input *key behavior during a presentation depends on whether or not the* ***Display Channel List*** *option is selected in the* ***Menu Preferences*** *menu. You can choose to have on-screen feedback when you press* Input*, or you may prefer to enter the desired source location "blind", i.e., without on-screen feedback. See* ***Menu Preferences*** *later in this section.*

Chan *Channel*

Press Chan to select a specific source setup (*channel*) defined and stored in projector memory. Once you enter a 2-digit channel number (or, if there is a list displayed, highlight it and press Enter), the display will automatically change and update according to the numerous setup parameters defined for that channel.

NOTE: Chan *key behavior during a presentation depends on whether or not the* ***Display Channel List*** *option is selected in the* ***Menu Preferences*** *menu. You can choose to use a scrollable list of channels when you press* Chan*, or you may prefer to enter the desired channel number "blind", i.e., without on-screen feedback. See* ***Menu Preferences*** *later in this section.*

Stby* *Standby*

Press Stby* and hold for approximately 1 second to blank all display while keeping the projector in a warmed-up and ready state. Or quickly press and release Stby* and follow immediately by ▲ON or ▼OFF if you want to guarantee the correct toggle (useful if you are unsure of the present status). Note that the lamp and electronics remain ON in standby mode, even though the image turns to black and most

Downloaded from Projector.com

functions are disabled. To leave standby press and hold [Stby*] again (or use [Stby*] [▼OFF]). Or simply press [Exit] or [Menu].

[Menu]

Menu

Press [Menu] to display the *Main* menu. A list of several options appears for access to specific functions, such as *Channel Setup* or *Image Settings*. Press [Menu] again to remove all menus and return to presentation level.

[Enter]

Enter

Press [Enter] to select a highlighted item, to toggle a checkbox (checked vs. unchecked), or to accept a parameter adjustment and return to the previous menu or image.

[Exit]

Exit

Press [Exit] to return to the previous level, such as the previous menu.

*NOTE: [Exit] does **not** save changes within text editing boxes (including number editing of a slidebars) or within pull-down lists. It acts as a "cancel" in these cases.*

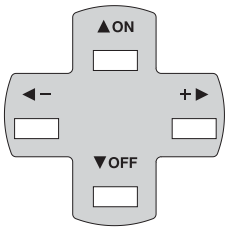

Arrow Keys

The arrow keys have a variety of functions depending on the situation. Some typical uses are described below. See also *Editing Text* later in *Section 3*.

- Use [◄–] or [+►] to change a slidebar value—hold as desired for continuous adjustment (*note the adjustment increments and range depend on the parameter being adjusted*).
- Use [◄–] or [+►] to change to a different option within a pull-down list without having to display the list first
- Use [◄–] or [+►] to jump between "pages", such as in *Help* or lengthy pull-down lists.

[▲ON] *or* [▼OFF]

Use the [▲ON] or [▼OFF] keys to navigate within a menu, pull-down list or text box, or to increase or decrease the value in the second (bottom) slidebar of a double slidebar.

You can also use [▲ON] or [▼OFF] in conjunction with certain *toggle* keys—i.e., those including an asterisk symbol—to ensure a toggle *only* in the desired direction. When turning the projector on, for instance, you may be too far from the projector to know whether it is really off or if the shutter is merely closed. If you press [Power*] and hold it for approximately 1 second in hopes of turning the projector *on*, the projector will actually turn *off* if the projector was already on. Instead, to avoid the risk of toggling in the wrong direction, quickly press *and release normally* the function key you wish to toggle (in this case [Power*]). Then immediately (within 2 seconds) press either [▲ON] or [▼OFF] as desired. The specific toggle will occur.

Toggle keys are labeled with an asterisk on the keypad. They are listed below:

- [Shutter*] + [▲ON] = close the shutter
  [Shutter*] + [▼OFF] = open the shutter
- [Stby*] + [▲ON] = put the projector in standby mode
  [Stby*] + [▼OFF] = leave standby
- [Power*] + [▲ON] = turn the projector on
  [Power*] + [▼OFF] = turn the projector off

Downloaded from Projector.com

- Mute* + ▲ON = turn the menu display on
  Mute* + ▼OFF = turn the menu display off
- OSD* + ▲ON = turn the menu system on
  OSD* + ▼OFF = turn the menu system off

Color — *Color*

Press Color to adjust the color saturation level, i.e. the amount of color in a video image. Lower settings produce less saturated colors — a setting of “0” produces a black and white image, for example. If the color level is too high, colors will be overpowering and unrealistic. Use ◄– and +► until the desired color saturation level is displayed. The Color key has no effect when using ADP.

Tint — *Tint*

Press Tint to adjust the red/green color hue for true color reproduction of video and HDTV signals. For best results, adjust tint while displaying an external test pattern—otherwise, it is recommended that tint remain at its default setting. Use ◄– and +► until the desired tint is achieved. This function can be used with digital sources.

Detail — *Detail*

Press Detail to adjust the sharpness of a video image (it is of limited use for non-video). Use ◄– and +► until the display is as sharp as desired, keeping in mind that any level of detail above 3 will also introduce a certain degree of noise in the image. Set below 3 to filter the signal and remove noise from a noisy source.

Cont — *Contrast*

Press Cont to change the amount of white in your images. Use ◄– and +► until you reach the desired level of contrast—for best results, start low and increase so that whites remain bright but are not distorted or tinted, and that light areas do not become white (i.e., are “crushed”). Conversely, low contrast causes dim images. See *3.6, Adjusting the Image (Image Settings* subsection).

Bright — *Brightness*

Press Bright to increase or decrease the amount of black in the image. Use ◄– and +► until you reach the desired level of contrast—for best results, start high and decrease so that dark areas do not become black (i.e., are “crushed”). Conversely, overly high brightness changes black to dark gray, causing washed-out images. See *3.6, Adjusting the Image (Image Settings* subsection).

Vol — *Volume*

This key is not functional on this projector, as there is no audio capability.

Proj — *Projector*

Press Proj when you want to access a specific projector within a network or if you simply need to see if the local projector is listening. The number appearing in the “Enter Number” window indicates which projector is currently listening to commands, and will match the projector number that has been defined in its *Menu Preferences* menu.

The “Projector” checkbox (read-only) shows whether or not the projector physically connected to a keypad is listening to commands from that keypad. A checkmark

Downloaded from Projector.com

means that connected projector is listening; if there is no checkmark, you are communicating with a different projector.

To use a specific projector, enter the 3-digit number assigned to the projector you want to use. Press [Enter] to select, press [Exit] to cancel. If you switch to a projector other than the one you are currently using, the checkmark will be deleted.

To broadcast to multiple projectors, press [Proj] and then [Proj] again ***without*** entering a projector number. Keypad commands will then affect all projectors present.

NOTES: 1) The "Broadcast Keys" option in the Communications menu must be selected for only ***one*** *(any) projector in a serial network. The keypad in use must be OFF (disabled) for the remaining projectors. See* ***2.10. Keypad Protocols and Conversion****, and* ***3.7, Configuring System Parameters.***

[Pixel] Pixel

Press [Pixel] to access the pixel tracking and pixel phase double slidebar. Adjust pixel tracking first: use [◄–] and [+►] to increase or decrease the frequency of the pixel sampling clock to correct image consistency and aspect ratio. For proper phase, use [▲ON] and [▼OFF] to increase or decrease pixel phase so that any shimmer disappears and the image is stable throughout. See *3.6, Adjusting the Image (Size and Position* subsection) for a complete explanation of tracking and phase.

[Position] Position

Press [Position] to move the image using the double slidebar. At the slidebar, use [◄–] and [+►] to move the image left or right, use [▲ON] and [▼OFF] to move the image up or down. Note that [Position] does not affect lens position, but rather what portion of the available pixel area in the projector is used for displaying the incoming signal (1280 x 1024 for *S12*, 1024 x 768 for *X10*).

[Lens] Lens

Press [Lens] to display the *Lens Control* menu ,where you can access motorized control of horizontal/vertical offsets, focus and zoom, or turn the *Intelligent Lens System*™ on or off. All slidebars are adjusted with [◄–] and [+►].

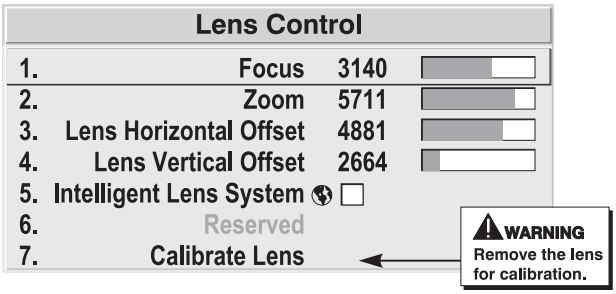

NOTE: Since the direction of lens travel affects the exact final position of the lens, setting a lens position (focus, zoom or an offset) may cause the lens to reverse its direction of travel, depending on its starting point, so that it approaches the setting from the correct direction. Any even-numbered setting is approached from above (the slidebar values will decrease), any odd-numbered setting is approached from below (the slidebar values will increase).

FOCUS: Adjust the image clarity.

ZOOM: Enlarge or shrink the image (requires a zoom lens).

HORIZONTAL OFFSET: Shift the lens and image left or right.

VERTICAL OFFSET: Shift the lens and image up or down.

Downloaded from Projecta.com

INTELLIGENT LENS SYSTEM: Enable "Intelligent Lens System" to add the 4 lens positions—focus, zoom, horizontal and vertical offset—to the current channel settings recorded in projector memory (see *3.5, Using Inputs and Channels* if you are unfamiliar with channels). This feature is particularly useful if you are using sources with radically different aspect ratios, such as anamorphic vs. 5:4. When switching to and from such displays, for example, the lens will automatically move to the last position defined for each channel, automatically optimizing the display for focus, zoom and offsets. Delete the checkmark if you want to use consistent zoom, focus and offset settings for all channels—the lens will not move unless you re-adjust a lens setting.

CALIBRATE LENS: Select "Calibrate Lens" to ensure that the mid-point for each of the four lens functions is defined as such in software, and that the lens mount movements remain accurate to this reference. Regular calibration can correct for slight eventual mechanical "drifting" of lens mount movements over time. It is particularly recommended whenever the projector is bumped or subjected to vibration, and it is required after certain service procedures.

⚠ IMPORTANT ⚠

It is recommended that you
REMOVE THE LENS before calibration.

During calibration, the lens mount will move in various directions for approximately 20 minutes, and a small "Lens Calibrating" message will appear on screen. Calibrating an empty lens mount (i.e., no lens or collar) ensures that nothing can bump into the optics during the process. Calibration is complete when lens mount movement stops—the sound of the motors will permanently cease. The *Lens Control* menu then reappears on screen.

Shutter*

Shutter

Press and hold Shutter* for approximately 1 second to toggle the shutter *closed* or *open* with a single key press (this also blanks the image electronically). Or quickly press and release Shutter* and follow immediately with ▲ON or ▼OFF if you want to guarantee the correct toggle (useful if you are unsure of the present status). Close the shutter whenever you want to mute all display yet maintain access to projector functions. Open the shutter to regain the display.

NOTES: ***1)*** *The status of the shutter is shown in the LCD window on the rear panel of the projector.* ***2)*** *Upon power-up, the shutter is open.* ***3)*** *The lamp remains on.*

Mute*

Mute

Use Mute* to temporarily hide the current menu—press and hold for approximately 1 second to toggle the menu on or off with a single key press. Or quickly press and release Mute* and follow immediately with ▲ON or ▼OFF if you want to guarantee the correct toggle (useful if you are unsure of the present status).

Func

Function Key

From presentation level, press Func followed by a 2-digit number to enable a specific color or colors in the display. For example, Func 6 4 will display only red and green data, Func 6 7 will display all colors data. The list of available color combinations is shown below and also appears on the back of the IR remote keypad. Color enabling can also be accessed in various locations within the menu system.

Downloaded from Projector.com

Func 6 1 = Red
Func 6 2 = Green
Func 6 3 = Blue
Func 6 4 = Red and Green
Func 6 5 = Green and Blue
Func 6 6 = Red and Blue
Func 6 7 = All colors (Exit does the same thing)

NOTE: Once Func is pressed in presentation level, the projector will not respond to non-numeric entry until 2 digits have been entered or 5 seconds have elapsed.

Use of the Func key within the menu system is noted with the appropriate topic elsewhere in *Section 3*. For example, press Func in the *Channel Setup* menu to enable deletion or copying of a channel.

OSD*

OSD (On-screen display)

Press and hold OSD* for approximately 1 second to toggle menus on or off (i.e., visible or invisible). Or press OSD* followed immediately by ▲ON or ▼OFF to guarantee the correct toggle direction (useful if you are unsure of the present status). Note that invisible menus are fully functional.

NOTES: 1) With OSD on, you can still hide menus, error messages, slidebars, etc. with the appropriate setting in the ***Menu Preferences*** *menu. 2) The status of the OSD* key is displayed in the LCD window at the rear of the projector.*

Help

Help

Press Help for detailed information about any current menu and highlight. Press Help again to exit. From presentation level, press Help to access the *General Help* menu consisting of *Using Help, Setup, Keys, Source (Input) Selection, Stat/Pwr LEDs* and *Using 3D*. Press Exit to leave *General Help* and return to presentation level.

Test

Test

Press Test to display one of the several available test patterns. Press Test again to display the next available pattern in the sequence. Test will exit after the last pattern, or press Exit at any time to remove the current test pattern from the screen and return to presentation level.

NOTE: For a complete list of all test patterns, see the ***Configuration (Geometry)*** *menu description later in Section 3.*

Keypad operating settings (protocols)

The remote keypad and the optional wired keypad both store keypad operating settings (called *protocols*) in memory. In some advanced applications, such as when you want to use two separate keypads to control two projectors independently, you may want to override the original protocol set at manufacture (which is "A or B") for one of the keypads. See section *2.10, Keypad Protocols and Conversion* for complete instructions.

Downloaded from Projector.com

3.4 Navigating the Menus

Most of the controls for the projector are accessed from within the projector's menu system. There are several groups of related *functions*, with each group selectable from the *Main* menu as shown at right. Press Menu at any time to display the *Main* menu.

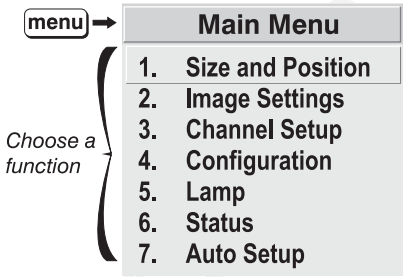

Figure 3.4. Main Menu

On the keypad, either enter the number corresponding to the function menu you wish to access, such as 2 for the *Image Settings* menu, or use the ▲ ▼ keys to highlight the desired option and press Enter. The function menu you selected will then appear. If you select "Auto Setup", this will not activate a separate function menu but rather begin an automated process of optimizing critical display parameters such as size, position, pixel tracking, etc., for the current source.

Once you have a function menu displayed, navigate in a similar manner—enter a menu option number for any numbered option, or use ▲ ▼ to move the highlight and press Enter at the desired option. Extra long menus have a scroll bar on the right–use the arrow keys to access the remainder of the menu. Locked items or items that do not pertain to the current action appear dimmed and cannot be selected.

NOTES: ***1)*** *If there is no signal present, all source-dependent adjustments are disabled.* ***2)*** *After 15 minutes of inactivity, the projector leaves the menu system and returns to the presentation.* ***3)*** *The* ***Status*** *menu is read-only.*

When finished with a function menu, do one of the following:

- Press Exit to return to the previous screen
- Press Menu to leave the menu system and return to the presentation

On-line Help

If at any time you are uncertain what to do next, press Help to display detailed information about the current menu or highlighted option. A scroll bar appears on the right-hand side of a help window if there is additional text–use the arrow keys to scroll. Press Help again to exit.

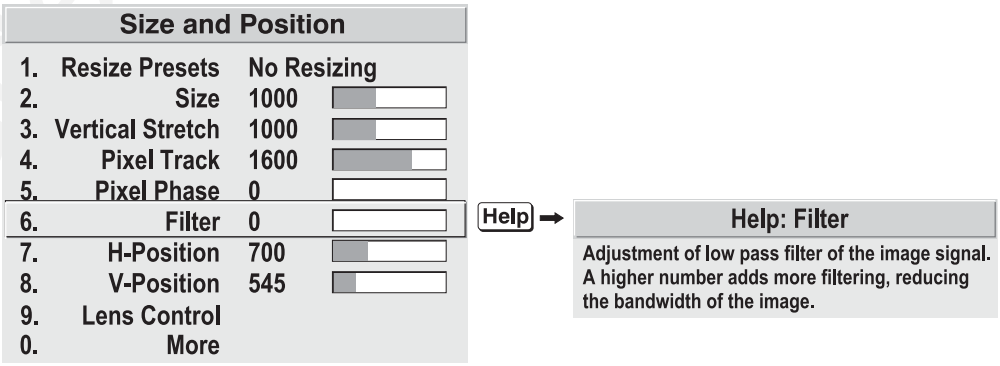

At the bottom of some menus, a line of hint text also appears.

From presentation level, press Help to access general *Help Topics*. Scroll as necessary within a topic. Press Exit to return to your presentation.

Downloaded from Projector

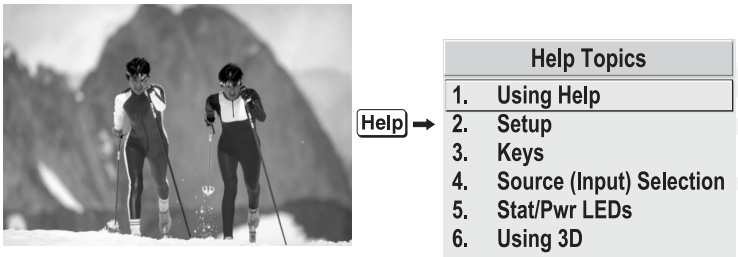

Figure 3.5. Accessing General Help Topics

Time-outs

Whenever the projector is not at presentation level, such as when there is a slidebar, menu, message or test pattern displayed, you have limited time in which to make a keypad entry before the projector returns to presentation level and the graphic disappears. These time-outs vary depending on the current display, as shown in the following chart:

TIME-OUTS	
Slidebar (from pres.)	5 seconds
Slidebar (from menu)	15 minutes
Lamp Timer Msg.	30 seconds
Channel entry	5 seconds
Other	15 minutes

The Global Icon

Menu options that include this icon apply universally to any incoming signal.

Using Slidebars and Other Controls

Most of the function menus allow you to change settings by using slidebars, checkboxes, and pull-down lists. To select a slidebar, toggle a checkbox status, or view a pull-down list, do one of the following within the function menu:

- Enter the menu option number corresponding to the setting you wish to change (for example, press 3 to select Vertical Stretch in the *Size & Position* menu).
- Or move the highlight to the option desired and press Enter.
- Or move the highlight to the option desired and press ◄– or +►.
- Or bypass the menus entirely and use a single key to immediately access an adjustment during your presentation (*NOTE: applies only to options having their own key, such as Color, Tint, Detail, Contrast, Brightness, Pixel and Position*).

Once selected, change the setting as desired (see below) and press Enter to save and return to the current function menu.

Slidebars in menus – The current value for a given parameter, such as size or vertical stretch, appears to the left of its slidebar icon (window). This number often expresses a percentage, or it may have units associated with it (such as pixels, degrees Kelvin, etc.), depending on the specific option. Press ◄– or +► to gradually adjust the setting up or down—both the number and the length of the bar change accordingly (for continuous adjustment, hold down the desired arrow key). Or press Enter to activate a slidebar text box for specific number entry via the keypad, then press Enter or ◄– or +► to save (or press Exit to cancel).

Downloaded from Projector.com

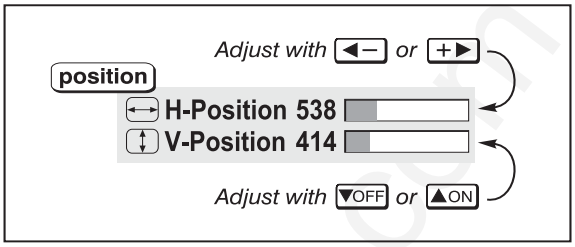

Double slidebars - In double slidebars, such as the pixel tracking/pixel phase double slidebar, adjust the top slidebar with ◄– or +► as desired. When you have finished with the top slidebar (whether changed or not), adjust the bottom slidebar with ▲ON or ▼OFF. When you are done, press Exit to return to your presentation. For fast continuous adjustments, hold down the desired arrow key.

"Direct" slidebars - For quick access, you can often use a slidebar (or double slidebar) without traveling the menu system. For example, simply press Cont to immediately display the same contrast slidebar accessed with the **Contrast** option in the *Image Settings* menu. Direct slidebars are listed below.

LIST OF DIRECT SLIDEBARS	
H-Position or V-Position	Position
Pixel Tracking or Phase	Pixel
Volume	VOL
Contrast	Cont
Brightness	Bright
Color	Color
Tint	Tint
Detail	Detail

Use the arrow keys to adjust a direct slidebar, or press Enter and enter a specific number from the keypad , then Enter or ◄– or +► to save *(* or Exit to cancel*)*. When you are done, press Exit to save and return to your presentation.

NOTES: ***1)*** *You can still adjust a direct slidebar as usual if the menu display is turned off (see* OSD* *or* ***Menu Preferences*** *menu) — the slidebar just won't be visible.* ***2)*** *A direct slidebar disappears if it is not used within 5 seconds.*

Checkboxes - Conditions are present if its adjacent checkbox contains a checkmark. To toggle the checkbox, simply highlight and press Enter, or highlight and use +► to check and ◄– to uncheck. For a checkbox that is numbered, simply enter the number of the option to toggle the checkbox.

5. Broadcast Keys ☑

Pull-down lists – To see a pull-down list of options available for a given parameter labeled with a ▼, you can:

- Highlight it and press Enter
- Or enter the menu option number.

Use ▲ON or ▼OFF keys to navigate up and down within the list (the current choice is noted with a small '). Press Enter to choose an option from the list, if desired.

Downloaded from Projector.com

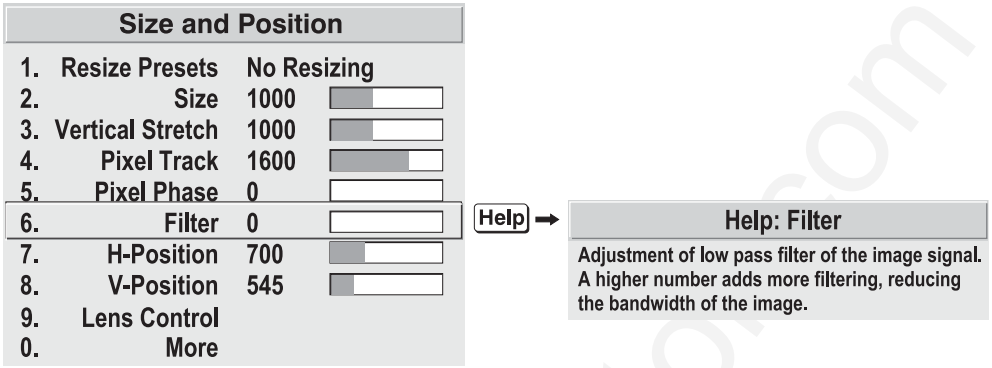

Figure 3.6. Example of Pull-Down List

Or, if you prefer to quickly scroll through a list without first pulling it down, highlight the option and use [◄–] or [+►]. Press [Enter] when the desired choice appears.

*NOTES: **1)** Press [◄–] or [+►] to jump between "pages" in an extra long pull-down list. **2)** Press [Exit] while in a pull-down list to **cancel** any change.*

Editing Text

ACTIVATE THE EDIT WINDOW: To enter or edit text, highlight the desired parameter (such as a channel name) and press [Enter] to activate its adjacent edit window. Any previously entered text is displayed with its first character highlighted in a square cursor, signifying that this character is ready for editing.

NAVIGATE WITHIN THE EDIT WINDOW: Press [+►] to move the cursor forward or [◄–] to move the cursor backwards as desired.

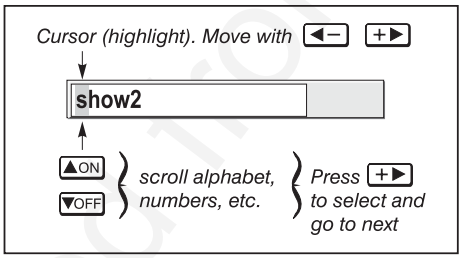

Figure 3.7. Entering Text

EDIT A CHARACTER: To edit a highlighted character, use [▲] and [▼] to scroll through the alphabet, numbers, spaces and punctuation available. When the character you need appears, press [+►] to select it—the cursor will move to the next character of current text, if present. Note that you can also enter a number directly from the keypad—it will be accepted and the cursor will move on.

ADD OR DELETE A CHARACTER OR SPACE: To insert a space at the cursor location, press [Func] [+►]. To delete a highlighted character (or space), press [Func] [◄–].

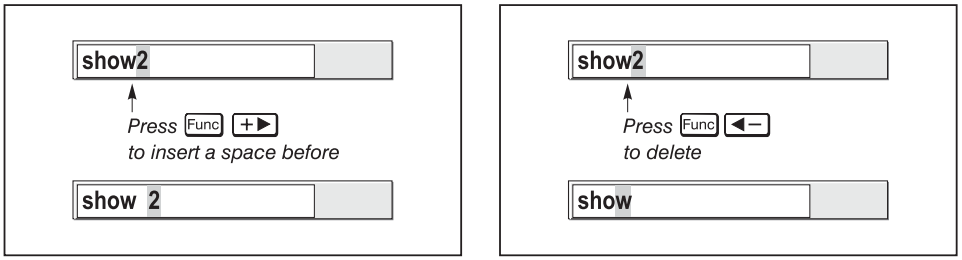

PRESS [Enter] WHEN FINISHED: To accept the edits and move out of the edit window, press [Enter].

NOTE: Press [Exit] at any time to cancel changes and return to the previously-defined text.

Downloaded from Projectorscom

Editing Numerical Values

Enter numbers directly from the keypad in order to specify numbers representing projectors, channels (source setups), switchers, or slots. As each digit is entered, it is displayed and the cursor moves on. Note that channel numbers are defined with 2 digits—for example, if you enter only a single digit (like “7”) for a channel number, the channel will automatically be defined as “07”. Use “07” to utilize this channel.

NOTES: 1) Once you enter the first digit, this digit replaces all old digits. 2) If you press any non-numbered key, the number entered up to that point is accepted and updated as the new value. 3) Press [Exit] *to cancel editing of numerical values.*

3.5 Using Inputs and Channels

NOTE: See ***Section 2, Installation and Setup****, for a full explanation of how to connect various sources to the projector.*

The projector stores and automatically recalls up to 99 different channels (source setups) for a variety of inputs. This memory feature allows you to define and conveniently use a wide variety of customized setups rather than having to repeatedly re-configure the projector for different presentations. Each physical source (i.e., *input*) can have several different channels associated with it.

Do I Select an Input Or a Channel?

INPUT – An input simply describes a physical location for an incoming signal connection. These connections are always either on the projector itself (one of the four inputs at the front of the projector) or on any switcher connected to the projector’s switcher port. [Input] describes the source signal according to two specific criteria only—to which *switcher* it is connected and to which *slot* it is connected—and is identified by a 2-digit number entered on the keypad. The first digit specifies the switcher (0-9), the second specifies the slot (1-9). Note that the projector is always considered “switcher #0”, and has only 4 “slots”.

EXAMPLES:

[Input] [1] [3] = use source connected to switcher #1, slot #3

[Input] [0] [1] = use source connected to the projector, slot #1 (i.e., [Input1])

SWITCH TO AN INPUT IN EITHER ONE OF TWO WAYS – Pressing the appropriate direct key — [Input1], [Input2], [Input3], or [Input4] — is a quick and seamless way to display from one of the four inputs connected at the front of the projector. Or, if your projector has a switcher connected to it at the **SWITCHER** port, press the general [Input] key and enter the 2-digit number representing the switcher and slot location for the desired signal (note there is no on-screen feedback for entering the numbers). Regardless of which method you use to select a source/input, the image will be displayed according to the following:

If it is the first time you have used the source/input (or if you used the input but did not define a channel by adjusting anything), the projector will recognize the new input signal based on its frequencies and polarities, and will automatically display an image according to default settings for such a signal. Note that a graphic source will resize into a full-screen image, whereas a video or HDTV source will resize as wide as possible while maintaining their original aspect ratio.

If you used the source once before and changed a display parameter such as contrast, V-Position etc., then a channel was automatically created and still exists in projector memory (see below). Using an [Input] key will automatically recall this channel—and all its setup parameters—and update the display accordingly.

Downloaded from Projector.com

If more than one channel exists for the input, the image will be displayed according to the setup parameters for the first channel with matching characteristics.

CHANNEL - A channel is a collection of measurements, locations and settings that tailor a display to your specific needs. Since source types and applications can vary greatly, you will likely want to adjust and define a wide variety of parameters, such as brightness, contrast, tint, size, etc., in order to customize and optimize the display coming from a particular source. For example, the display settings you choose for a VCR source may be very different from those you choose for a high resolution computer source, or one signal may simply vary from another signal used earlier through the same input location. Once you have adjusted a display parameter, such as pixel tracking or contrast, all current settings are collectively stored in the projector's memory as a unique 2-digit channel, such as [0][9]. You can have numerous distinct channels available for the same input, any of which can be selected by using the [Chan]"key on the keypad followed by the 2-digit channel number.

Shown at right is a sample channel list as would be available from [Chan]. This is typically called the *channel list*.

NOTE: The [Chan] *key may display a channel list or not, depending on what you have defined within the* ***Menu Preferences*** *menu (see* ***Menu Preferences*** *later in this section).*

In order to use channels ([Chan] on the keypad), you must first create them. See below.

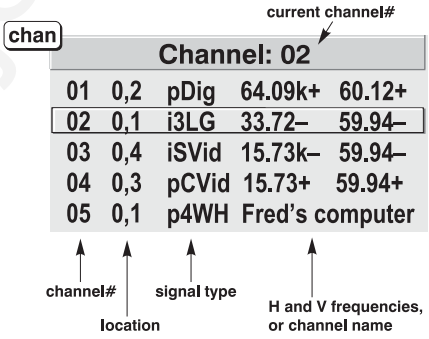

Channel List

Creating a New Channel
– AUTOMATIC –

To use a new source with the projector, a new channel must be added to projector memory so that the projector will respond properly to an input signal from that source in the future. A new channel can be created automatically, as described here, or it can be copied from an existing channel and then edited as necessary (see *Copying or Deleting Channels* later in this section).

When you select a direct input (press [Input] or [Input1], [Input2], [Input3] or [Input4]), the existing channels in the projector are searched for matching input and signal parameters. If no match to the incoming input signal is found in the currently defined channels, a new channel is temporarily created based on factory-defined defaults for this signal. The *channel number* assigned is the lowest available number from 01-99.

NOTES: ***1)*** *An automatic channel will be discarded unless one or more of its parameters are changed, and will not appear in the channel list (see below).* ***2)*** *If two channels have the same distinguishing source characteristics except for the reversal of sync connectors (i.e., H-sync and V-sync, are switched), they are still defined as distinct channels.* ***3)*** *You cannot define a new channel without a signal present.*

If the incoming signal *does* match an existing channel, the image will be set up and displayed as usual according to the parameters currently defined for that channel.

Downloaded from projectorcentral.com

USING A CHANNEL: You can normally select a channel at any time by pressing Chan (see right). If you want to prevent a channel from appearing in this list, you must edit the channel as described in *Channel Edit* later in this section. Such a channel can still be selected by entering its number as shown at right.

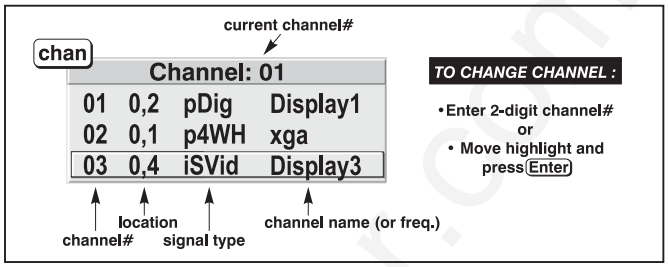

NOTES: ***1)*** *The current channel is highlighted upon entering the channel list, or, if this channel is not displayed here, the first channel in the list is highlighted.* ***2)*** *Channels created automatically do not appear in the channel list unless a parameter has been changed.*

What Channels Are Defined So Far?

All available channels are listed in the *Channel Setup* menu, which describes how each channel can be accessed and which serves as the gateway for editing, copying and deleting channels.

From the presentation level press Menu to display the *Main* menu. To display the *Channel Setup* menu, press 3, or move the highlight to the *Channel Setup* option and press Enter. The *Channel Setup* menu will appear (see sample at right), with the active channel highlighted.

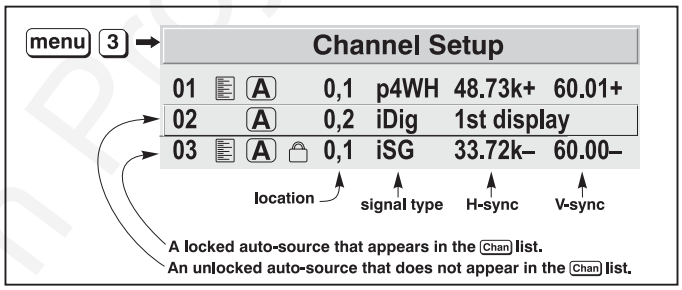

Figure 3.8. All Channels Appear in the Channel Setup Menu

WHAT APPEARS IN CHANNEL SETUP MENU? This menu lists all channels defined so far and indicates how they are connected to the projector. The far left column lists channel numbers currently defined. The values in the far right columns indicate horizontal and vertical frequencies—if someone has defined a name for this channel, it appears here instead. Remaining columns contain details pertaining to each channel setup, such as its switcher number, slot location, a variety of icons indicating access to each channel, and an abbreviated description of each signal type. See *Editing a Channel Setup* for details.

NOTE: If you have more than a handful of channels, use ◄– and +► to see the remaining channels not visible in the initial display of channels.

SIGNAL TYPE — Either channel list, whether the Chan key list or the *Channel Setup* menu, identifies signal types in a shortened form as defined below. These descriptors indicate what signal information the projector uses to identify a match for a given channel, and are preceded by either an “i” (interlaced signals) or “p” (progressive signal“). See Table 3.1.

Downloaded from Projector.com

Table 3.1. Abbreviations for Signal Type

Abbrev.	Signal Type
4WH	Composite (4 wire) on HC input
4WV	Composite (4 wire) on V input
SG	Sync-on-green
SR	Sync-on-red
5W	Separate H,V
5WR	Separate H,V swapped
SVid	S-Vid
CVid	Composite Video
3LH	Tri-Level on HC input
3LV	Tri-Level on V input
3LG	Tri-Level on green
E3LH	European Tri-Level on HC input
E3LV	European Tri-Level on V input
E3G	European Tri-Level on green
Dig	Digital

FUNCTIONS WITHIN THE CHANNEL SETUP MENU —To copy, delete or edit a channel, highlight the desired channel in the *Channel Setup* menu and do one of two things:

- Press Func if you want to copy the selected channel or delete this or other channels. See *Copying or Deleting a Channel* below.
- Press Enter if you want to edit channel setups (i.e., non-image related parameters) for the selected channel. See *Editing a Channel Setup*, below.

Copying or Deleting Channels

TO COPY A CHANNEL, highlight the desired channel in the *Channel Setup* menu, then press Func to go to the *Channel Copy/Delete* submenu. Select "Copy" and press Enter—a new channel will be created. It is identical to original, which still remains, but it is identified with the next available number from 01-99. If you change your mind and do *not* want to copy the current channel, press Exit to cancel and return to the previous menu. Copying channels is a quick method for creating numerous channels, each of which can then be edited and adjusted for a variety of presentations in the future.

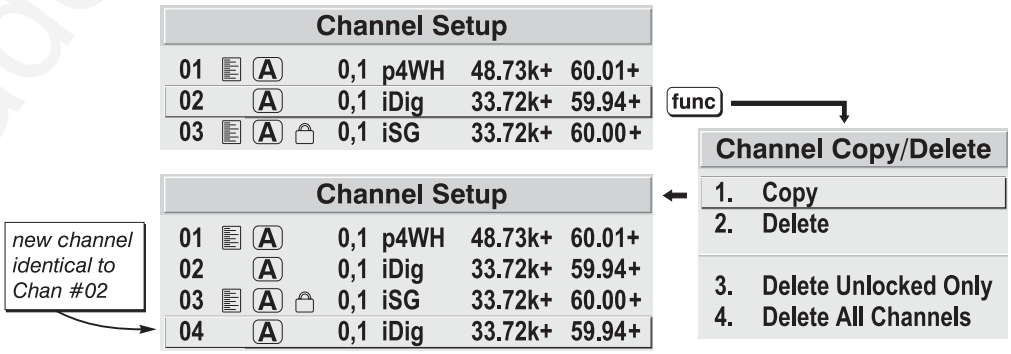

Figure 3.9. Copying A Channel

TO DELETE A CHANNEL, highlight the desired channel in the *Channel Setup* menu, then press Func to activate the *Channel Copy/Delete* submenu. Select "Delete" and press Enter—a confirmation window will appear to make sure that you really want to delete this channel.

Downloaded from Projector.com

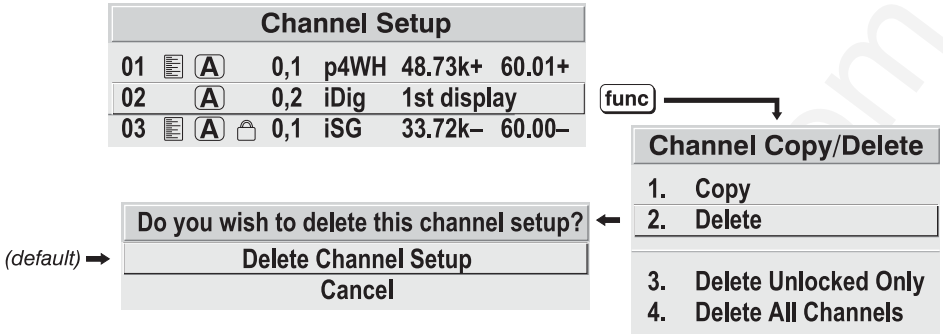

Figure 3.10. Deleting a Channel

TO DELETE MULTIPLE CHANNELS, highlight any channel in the *Channel Setup* menu and press Func to go to the *Channel Copy/Delete* submenu. Select "Delete Unlocked Only" and press Enter to delete all unlocked channels. Or select "Delete All Channels" to delete all channels, even those that are locked. In either case, the current channel will remain but will be redefined from projector defaults.

NOTE: For any deletion, a confirmation box appears to make sure that you really want to delete. Select "Cancel" (default) if you don't want to delete after all.

Editing a Channel Setup

The basic setups that describe how and where a channel can be accessed are listed in the *Channel Setup* menu. These channel setups can be edited at any time in the *Channel Edit* submenu.

CHANNEL EDIT — STEP 1

From the presentation level press Menu to display the main menu. To display the *Channel Setup* menu, press 3, or move the highlight to the *Channel Setup* option and press Enter. The *Channel Setup* menu will appear.

CHANNEL EDIT — STEP 2

To edit parameters shown in the *Channel Setup* menu, select the relevant channel and press Enter. The *Channel Edit* menu will appear similar to the sample shown in Figure 3.11.

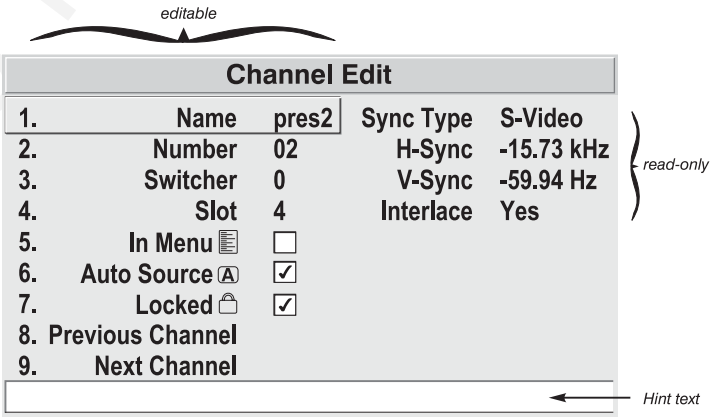

Figure 3.11. Channel Edit Menu (SAMPLE)

CHANNEL EDIT — STEP 3

If desired, edit the following channel setups in the *Channel Edit* menu:

- **CHANNEL NAME:** An alpha-numeric label can be defined and/or changed here. Channel names can be up to 12 characters in length.
- **CHANNEL NUMBER:** A channel number from 01 to 99 can be changed here. *NOTE: If you enter a channel number that already exists, a dialog*

Downloaded from Projector.com

message appears indicating that this number is already in use–assign a different channel number.

- **SWITCHER NUMBER:** "0" represents the projector itself. Or, if the input source is connected to a switcher, the default will be the lowest switcher number available (from 1-9)–change here as desired.
- **SLOT:** 1 (Input1), 2 (Input2), 3 (Input3), or 4 (Input4) for projector inputs, or current slot number (1-9) if the source is connected to a switcher.
- **LOCKED:** If checked, all of the image settings for this channel are disabled. If unchecked (default), all available image settings can be adjusted as desired. You cannot use Auto Setup with a locked channel.
- **IN MENU:** If checked (default, except for automatically defined channels with unchanged parameters), this defined channel will then appear in the list available when Chan key is pressed. If unchecked, the channel must be accessed via Chan on the keypad or via the Auto Source function. *NOTE: On-screen display of the channel list is an option that must be set in the **Menu Preferences** menu.*
- **AUTO SOURCE:** If checked, (default), the projector can automatically locate this channel when an incoming input signal matches. If not checked, the projector can locate the selected channel only when it is directly selected via Chan on the keypad—and a change in input signal will *not* result in a channel change.
- **PREVIOUS CHANNEL:** Select this option to see or change *Channel Edit* settings for the previous channel in the *Channel Setup* list.
- **NEXT CHANNEL:** Select this option to see or change *Channel Edit* settings for the next channel in the *Channel Setup* list.

3.6 Adjusting the Image

Most options for image adjustments can be accessed through two menus: *Size and Position* (Menu 1) and *Image Settings* (Menu 2), both of which are listed in the *Main* menu. From either of these two menus, you can change settings affecting the image from the current channel by working with the appropriate slidebars, checkboxes and pull-down lists. Exit will always return to the previous menu (or to the presentation, if from the *Main* menu) and accept any changes you may have entered.

From your presentation, you can access any of the individual options in these menus by pressing Menu followed by the appropriate two-digit number representing their location in the menu system. For example, press Menu 2 6 to quickly access the "Color Setup" option in the *Image Settings* menu.

Note that for certain options, you may prefer to use a "direct key" from presentation level to go directly to a particular option without traveling through the menu system (*note: not available for all display parameters*). For example, press Cont to access the "contrast" slidebar immediately. Press Exit to return to your presentation.

*NOTE: 1) To hide the "direct" slidebars only, make sure the Display Slidebars option in the **Menu Preferences** menu is unchecked. 2) To hide the entire menu system from view, toggle the on-screen display OFF: press and hold the OSD* key.*

Downloaded from Projector.com

Auto Setup

If you want the projector to quickly set up the image for you, select “Auto Setup” from the *Main* menu. A confirmation box will ask if you really want to continue, in which case display parameters listed in Table 3.2 below will be set for you. An “Auto Setup” can save time in setting up an image, and you can also make further adjustments as desired. You must have an unlocked channel present to use Auto Setup.

Table 3.2. Auto Setup

What an “Auto Setup” Does	
OPTIMIZES:	***SETS TO DEFAULT:***
Pixel Tracking	Contrast & Brightness
Pixel Phase	Auto Input Level (off)
Size	Blanking
Vertical Stretch	Detail *(if video source)*
Position	Filter
Input Levels	Luma Delay

Image Size and Position

The *Size and Position* menu allows you to increase or decrease the size of your image, change its proportion (aspect ratio), move the image to a specific area of the screen, and refine other related parameters. Use *Size and Position* controls to match the image precisely to the screen size and aspect ratio used for your application.

Refer to *"Using Slidebars and Other Controls"* (earlier in this section) if you need help using any of the following slidebars or pull-down lists to alter your image. Changes made to the *Size and Position* menu are applied immediately and are saved when you exit the menu (press Exit or Menu).

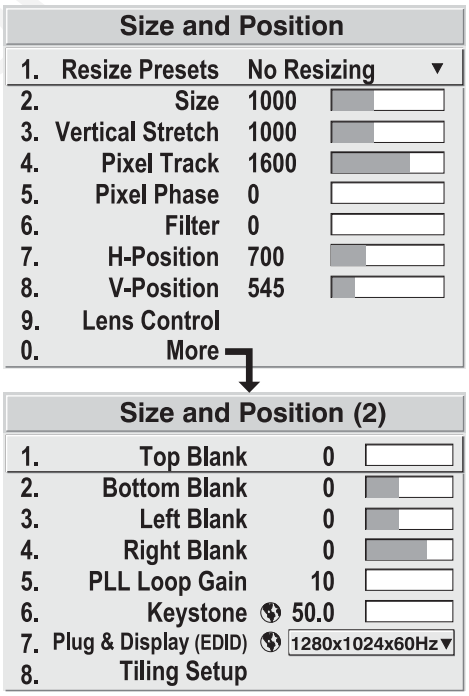

Figure 3.12. Size and Position Menu

Resize Presets

Use *Resize Presets* to quickly display an image in its native resolution (including anamorphic) or to automatically resize an image to closely fit the screen. The value for *Size*, *Position* and *Blanking* parameters (described later) will, in turn, change as necessary without your having to set them

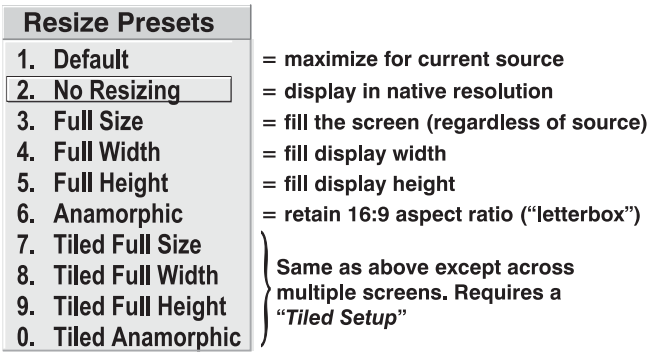

Figure 3.13. Resize Presets Submenu

Downloaded from Projector.com

manually. Resizing options for non-tiled applications are explained in detail below.

WHAT IS THE PROJECTOR'S DEFAULT? When displaying a new source, by default your image will fill the screen as fully *as possible* for the type of source present. See *Select "Default"* below.

WHEN "CUSTOM" APPEARS: The "Custom" descriptor automatically appears in the *Size and Position* menu when any of the values for *Size*, *Vertical Stretch*, *H-Position*, V-*Position* or *Blanking* do not correspond to those for a preset. It is not an option in the *Resize Presets* pull-down list.

- Select "**DEFAULT**" (default) for most images. This option will center and display your image as large as possible *for the present source*, as described below:

  - ✓ ***A graphic image*** will resize to fill the screen, regardless of its original aspect ratio. For example, 1024 x 768 becomes 1280 x 1024 in the *S12*.
  - ✓ ***A video image*** will resize to fill the screen while still maintaining its aspect ratio (assumed to be 4:3).
  - ✓ ***An HDTV wide-screen (16:9) image*** will resize to fill the screen horizontally while maintaining its 16:9 aspect ratio (i.e., there will be black borders at top and bottom, commonly called "letterboxed").
  - ✓ ***A non-HDTV anamorphic (16:9) image***, typical of DVDs, will be stretched vertically.

So with the exception of HDTV (16:9), the "Default" setting produces an aspect ratio that is either almost or exactly 5:4 (or 4:3 in *X10*). See *S12* examples below.

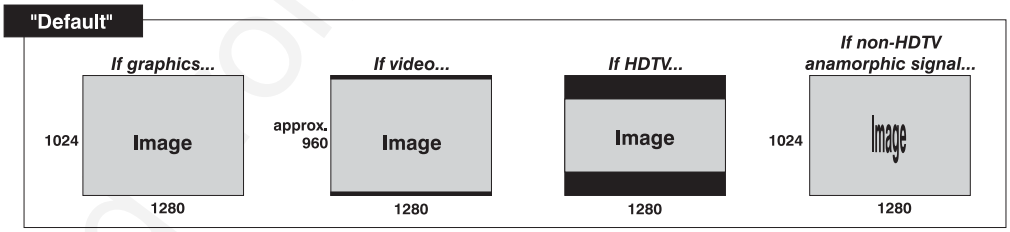

NOTE: Shown with S12 resolution (1280 x 1024). Roadie X10 has 1024 x 768 resolution.

- Select "**NO RESIZING**" to display the image in its native resolution, which may be smaller or larger than 1280 x 1024 (*S12* resolution). All *Size*, *Vertical Stretch*, *H-Position*, *V-Position* or *Blanking* values will change accordingly. For example, for a source with a native resolution of 800 x 600, "No Resizing" will center a smallish image within a black border. Conversely, an HDTV image is wider than both 1024 and 1280 and will be cropped on the sides—or, in the case of "1080i" HDTV, cropped at top and bottom too. With "No Resizing", signals with non-square pixels, such as video connected to **INPUT 3** or **INPUT 4**, produce distorted images that are too tall or too wide. See below.

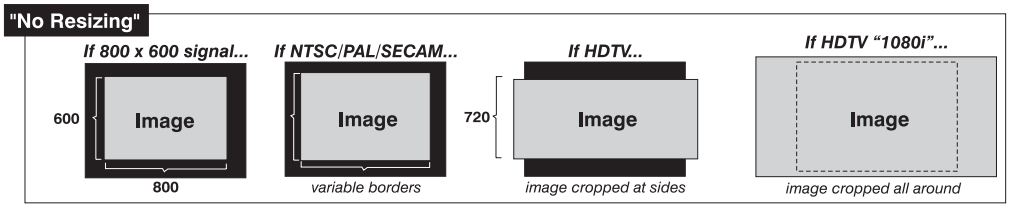

Downloaded from Projector.com

- Select "**FULL SCREEN**" to use *all pixels* (1280 x 1024 in *S12*) for displaying the image, regardless of source or original aspect ratio. See right. *NOTE: Shown with S12 resolution. Roadie X10 has 1024 x 768 resolution.*

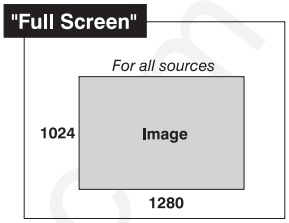

- Select "**FULL WIDTH**" to fill the display from left-to-right. Depending on the source, this may create top and bottom borders. See right.

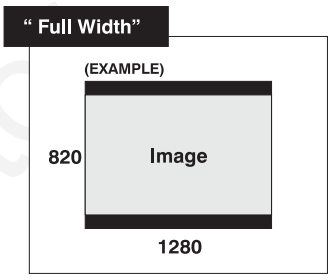

- Select "**FULL HEIGHT**" to fill the display from top-to-bottom. Depending on the source, this may create side borders. See right.

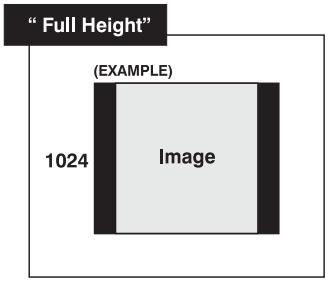

- Select "**ANAMORPHIC**" to display an entire ***non***-HDTV "wide screen" (anamorphic) image in its native 16:9 aspect ratio. Known as letterbox, the image will fill the screen from left-to-right, but will not use all vertical pixels available (top and bottom will be black). If you do not choose "Anamorphic" when a non-HDTV anamorphic image is present, the default image will be stretched vertically, characterized by obvious distortion and "thin people".

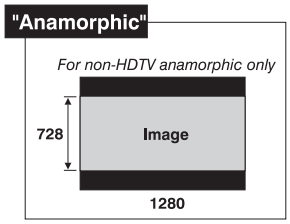

  NOTE: Use "Anamorphic" for regaining a 16:9 display of ***non****-HDTV anamorphic sources only (common to some DVDs, for example). For HDTV, the "Default" setting will produce the same result.*

- All **TILED** resizing choices are selectable only if you have defined a tiled group of projectors in the *Tiling Setup* submenu. See *3.10, Using Multiple Projectors.*

Size

Size controls both the image *width* and *height* in tandem, maintaining the original aspect ratio (proportion) of data from the incoming signal. Under some conditions in the *X10*, adjusting size also adjusts keystone.

NOTE: If Size $1000 (1000 = No Resizing) **and** *Size* ***x*** *Vertical Stretch value $1,000,000, adjusting Size also adjusts keystone simultaneously.*

Downloaded from Projector.com

Vertical Stretch

Vertical stretch adjusts the *height* the image while keeping the width constant. Use *Vertical Stretch* to display data from the incoming signal in a different aspect ratio. Under some conditions, adjusting Vertical Stretch also adjusts keystone.

NOTE: If Size $1000 (1000 = No Resizing) **and** *Size* **x** *Vertical Stretch value $1,000,000, adjusting Vertical Stretch also simultaneously adjusts X10 keystone.*

Pixel Track

(SHORT CUT: Press [Pixel] and adjust the top slidebar.)

Pixel tracking adjusts the frequency of the pixel sampling clock, indicated by the number of pixels per line, so that all pixels generated by a particular source are sampled. Proper pixel tracking ensures that the image quality–whether good or poor–is *consistent* across the screen, that aspect ratio is correct, and that pixel phase can be optimized (below).

NOTE: By default, the projector samples at the correct frequency for most sources.

Pixel tracking is adjusted most effectively using a good test pattern, such as a smooth gray consisting of a clear pattern of tiny black and white dots, or a similar “half on, half off” graphic image, such as the *Windows* shutdown screen. Steady flickering or several soft vertical stripes or bands across the entire image indicates poor pixel tracking. Adjust the slidebar until the stripes broaden to the point where one large stripe fills the image. Again, the image may still exhibit some noise. See *Pixel Phase*.

Pixel Phase

(SHORT CUT: Press [Pixel] and adjust the bottom slidebar.)

Pixel phase adjusts the phase of the pixel sampling clock relative to the incoming signal. It is used primarily for adjusting RGB inputs.

NOTE: Adjust pixel phase ***after*** *pixel tracking is properly set.*

Adjust pixel phase when the image (usually from an RGB source) shows shimmer or “noise”. Pixel phase adjustment is done most effectively from within a proper test pattern, such as a smooth gray consisting of a clear pattern of tiny black and white dots, or a similar graphic image, such as the *Windows* shutdown screen. Adjust until the image is stable and each dot is clearly defined. Using the numbers on the slidebar as a guide, you will notice that you can actually stabilize the image at more than one point—i.e., you may find that the image appearance at "11" is identical to the image appearance at "38", thus you can select either setting.

Filter

Filter applies a low pass filter to the input signal. This removes high frequencies which can improve pixel phase noise but which also reduces signal bandwidth. Note that most signals will not require any filter adjustment—use the filter option only if standard pixel tracking and phase adjustments do not adequately clear up a “noisy” signal. For best results:

Downloaded from Projector.com

1. Optimize *Pixel Tracking* and jot down the value.
2. Optimize *Pixel Phase*
3. If the image is still too noisy, return to *Pixel Tracking* and "mis-adjust" so that 2 vertical bands of noise appear, separated by a good center band. See right.
4. Adjust *Filter* to maximize the width of the good area. See right.
5. Return *Pixel Tracking* to its correct setting from Step 1.
6. Readjust Phase.

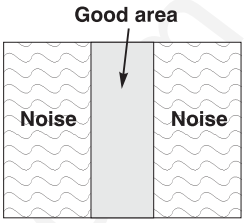

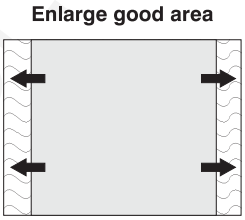

NOTE: "Filter" affects only the current signal.

H-Position

(***SHORT CUT:*** Press [Position] and adjust the top slidebar.)

This option moves the image right or left within the area of available pixels.

NOTE: The value shown represents where the approximate center of the image lies in relation to the total number of pixels available horizontally. This varies widely according to the signal—watch the image while adjusting.

V-Position

(***SHORT CUT:*** Press [Position] and adjust the bottom slidebar.)

This option moves the image up or down within the area of available pixels.

NOTE: The value shown represents where the approximate center of the image lies in relation to the total number of pixels available vertically. This varies widely according to the signal—watch the image while adjusting.

Lens Control

(***SHORT CUT:*** Press [Lens] to activate the *Lens Control* menu.)

For a full description of the *Lens Control* menu, see *3.3, Using the Keypad* ([Lens] key) and *2.8, Zoom, Focus & Lens Offset*.

Blanking: Top, Bottom, Left or Right

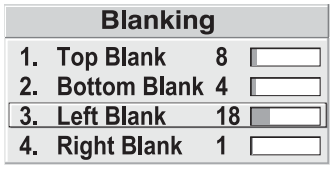

This submenu blanks (turns to black) the top, bottom, left, or right edge of the image so that any unwanted information is cropped from view. For example, when displaying native size video you may want to blank out a few of the top lines. Avoid using in combination with "Keystone" option.

PLL Loop Gain

This control changes the relative offset to the default gain. The default PLL (Phase Lock Loop) Loop Gain setting of 10 is set automatically with a Pixel Tracking

Downloaded from Projector.com

adjustment and is correct in most cases. In rare instances, such as if your image exhibits tearing or “flag-waving”, increase the PLL loop gain setting as necessary. Or, if your image is unstable and “breaks up”, this may indicate that the PLL loop gain setting is either too high or too low. PLL Loop Gain affects the current channel only.

Keystone

NOTE: Optimized in X10 only.

Adjust the keystone control if *Roadie X10* images appear *keystoned* in shape—that is, smaller at either the top or bottom rather than rectangular. The effect of keystone adjustment is similar to physically tilting the projector up or down in relation to the screen, and it affects all sources.

NOTES: ***1)*** *Keystone is enabled for a source only if Size is* $*1000* ***and*** *Size* ***x*** *Vertical Stretch is* $*1,000,000.* ***2)*** *Optimized in X10 only.* ***3)*** *Avoid using Keystone with Blanking.*

Generally, set at 50 (default) to apply no keystone—if your projector is positioned with its lens surface parallel to the screen, images will be rectangular. If images are too narrow at the bottom, increase keystone. If images are too narrow at the top, reduce keystone.

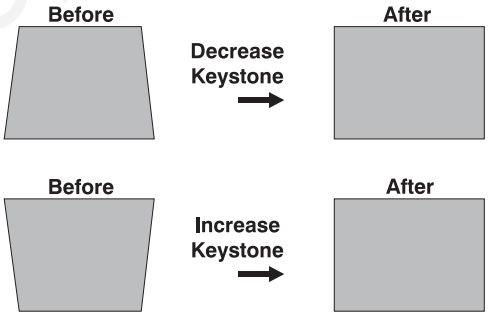

The keystone control may be limited when Size is just slightly greater than 1000. In general, work with image size, stretch and keystone controls as necessary for your application.

Plug & Display (EDID)

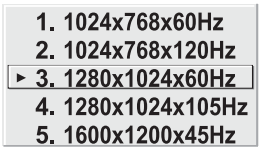

By default, the Plug & Play option detects an incoming digital flat panel video signal and displays it in the native resolution of your projector. If you have additional daisy-chained projectors, they will display in this resolution as well. If you want to use a different resolution (for example, your graphics card may not support the current resolution), select a different Plug & Play setting from the list—XGA (10240x 768), SXGA (1280 x 1024) OR UXGA (1600 x 1200).

Tiling Setup

See *3.10, Using Multiple Projectors (Tiling Setup* section).

Downloaded from Projector.com

Image Settings

Use options in the two-page Image Settings menu to alter your image in ways that do not affect its size or position. Changes made to the *Image Settings* menu are applied immediately and are saved when you exit the menu (press Exit or Menu). Options not available for your projector appear dim and are disabled.

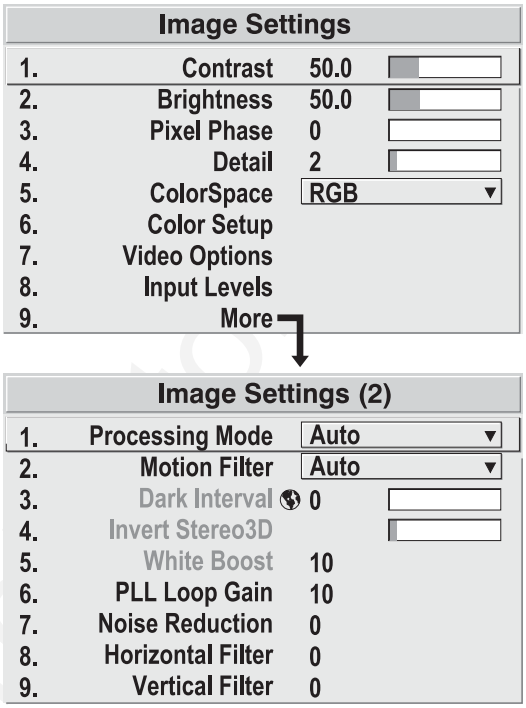

Figure 3.14. Image Settings Menu

Contrast

(SHORT CUT: Press Cont and adjust the slidebar.)

"Contrast" increases or decreases the perceived difference between light and dark areas of your image (0-100). If contrast is set too high, the light parts of the image lose detail and clarity. If set too low, the light areas will not be as bright as they could be and the image will be dim. Start low and increase so that whites remain bright but are not distorted or tinted, and that light areas do not become white (i.e., are "crushed"). For best results, keep close to 50.

NOTE: If environment lighting changes, it may be necessary to re-adjust both options.

Brightness

(SHORT CUT: Press Bright and adjust the slidebar.)

"Brightness" increases or decreases the amount of black in the image (0-100). Start high and decrease so that dark areas do not become black (i.e., are "crushed"). Conversely, high brightness changes black to dark gray, causing washed-out images. For best results, keep close to 50.

Pixel Phase

(SHORT CUT: Press Pixel and adjust the slidebar.)

See description in *Size and Position* section, above.

Detail

(SHORT CUT: Press DETAIL and adjust the slidebar.)

"Detail" adjusts the sharpness of a video image. Use ◄– and +► until the display is as sharp as desired, keeping in mind that any increase in detail above 3 (default) will also introduce a certain degree of noise in the image. Set below 3 to filter the signal and remove noise from a noisy source. Keep at 3 to apply no detail.

Downloaded from Projector

Color Space

This option determines how the color components of an input signal are decoded for accurate color in the display. Selecting a color space option is useful only for analog signals connected to **INPUT 1** or **INPUT 2.** Although the color space for such a signal is automatically determined by the projector, in some circumstances you may wish to override this and manually set a different color space.

NOTE: For digital signals or for signals connected to **INPUT 3** *or* **INPUT 4**, *the color space function is entirely automatic and the pull-down list disabled.*

The current color space appears in the *Image Settings* menu. Press [ENTER] to select a different option:

- Select **RGB** *unless* you are using component video at **INPUT 1** or **2.**
- Select **YPbPr (Video)** with a standard definition televised signal (SDTV)
- Select **YPbPr (HDTV)** with a high definition televised signal (HDTV).

NOTE: When certain RGB signals are first connected, the projector may not initially recognize them as RGB and will incorrectly decode their color information as YPbPr (video). These signals can include:

- *RGB signals in NTSC, PAL, SECAM frequency ranges*
- *Scan-doubled sync-on-green*
- *Scan-quadrupled sync-on-green*

For these signals, change the Color Space to RGB, then define a new channel for future use.

Color Setup

Select this submenu to work with aspects of color—adjust for saturation and overall hue in video signals, or adjust gamma or temperature in any display.

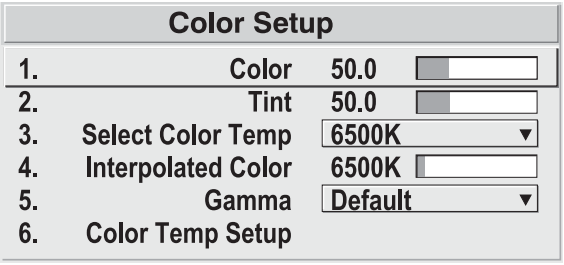

COLOR — "Color" adjusts the color saturation level or the amount of color in a video image. When set to "0' the image appears black and white, and when set too high the colors appear overpowering and unrealistic. Use [◄–] and [+►] to adjust "Color" until the desired saturation level is displayed. For a shortcut to "Color" slidebar, press [Color] at any time.

TINT — "Tint" adjusts color hue to obtain true color reproduction of NTSC video signals or HDTV signals. Use [◄–] and [+►] until the desired balance or red-to-green is displayed in your image. It is best to adjust tint while displaying an external test pattern—otherwise, it is recommended that tint remain at its default setting. For a shortcut to "Tint" slidebar, press [Tint] at any time.

Downloaded from Projector.com

SELECT COLOR TEMP — "Select Color Temp" applies either a preset color temperature (3200K, 5400K, 6500K or 9300K) or any previously "User" defined color temperature. Color temperatures are measured in degrees Kelvin and represent the "coloration" (reddish or bluish) of the whites displayed by the projector—the lower the temperature, the more reddish the whites; the higher the temperature, the more bluish the whites.

1. 3200K
2. 5400K
3. 6500K
4. 9300K
5. User1
6. User2
7. User3
8. User4
9. Interpolated

NOTE: The custom temperatures "User" or "Interpolated Color" all default to 6500K until they are redefined in the ***Color Temperature Setup*** *menu. See below.*

INTERPOLATED COLOR — Use this option if you need a specific color temperature that lies somewhere between one preset color temperature and another. Adjust the slidebar to define a new temperature which will be interpolated from the neighboring presets (for example, 7841 is interpolated from 6500 and 9300). This slidebar is disabled unless you have a source connected and have selected "Interpolated Color" in the "Select Color Temp" pull-down list.

GAMMA — *NOTE: Gamma does not normally require adjustment and is intended for experienced users only.*

The "Gamma" option affects the shape of the curve determining what gray shades are available for a given amount of signal input between minimum (black) and maximum (white). Different curves can improve performance for certain kinds of source input and applications. Generally the best gamma curve is one that produces maximum contrast, brightness and color performance for the current signal and ambient lighting conditions.

Gamma
1. Default
2. Enhanced
3. High Ambient
4. PAL/SECAM
5. Linear

DEFAULT (default) – This setting provides good black levels and high contrast under optimum viewing conditions for virtually all types of images, including video, HDTV and computer graphics.

ENHANCED – This setting elevates *middle* gray levels compared to "Default", and provides a more gradual rolled-off transition to maximum white. Together, these differences can improve the appearance of many kinds of images.

HIGH AMBIENT – This setting elevates *low* gray levels compared to the "Default" and "Enhanced" settings. In high ambient light conditions, details can be seen in the dark parts of an image that would otherwise be difficult to perceive.

PAL/SECAM – This setting results in a darker image with higher contrast. The gamma curve more closely matches the official standard for PAL and SECAM video signals.

LINEAR – This setting is a straight, linear transition from black to white. For normal source signals, it results in a picture of low contrast with highly elevated low- and mid- level grays. It should be used only with sources that have their own pre-applied gamma control.

COLOR TEMPERATURE SETUP — Use the *Color Temperature Setup* submenu to apply, alter, add, or copy a color temperature, or if you want to use an unaltered factory default color temperature.. This menu is duplicated in other locations.

Downloaded from Projector

By default, the projector can utilize any of four calibrated factory-set color temperatures: 3200, 5400, 6500 or 9300 (expressed in degrees Kelvin). For most applications, these temperatures will display accurate and realistic colors from a variety of sources. They can be selected at any time from the “Select Color Temp” list in the *Color Setup* submenu.

However, if you require extra color temperatures, you can also add up to five custom color temperatures—four “User” and one “Interpolated Color”—by defining them within the *Color Temperature Setup* menu (each defaults to 6500K until then). Any “User” or “Interpolated Color” temperature created here is immediately applied, or it can be selected at any time from the *Color Setup* menu as usual, regardless of your source or channel. Use of the *Color Temperature Setup* menu is described below.

NOTE: For best results, use an internal grayscale test pattern when working with color temperature.

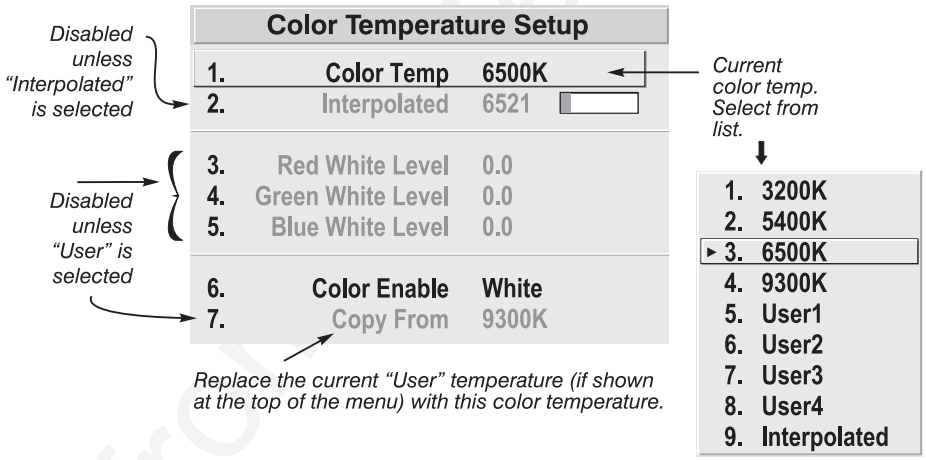

Figure 3.15. Color Temperature Setup Menu

SELECT COLOR TEMP – See Figure 3.15. Upon opening the *Color Temperature Setup* menu, the current temperature appears as the top option. You can change to a different color temperature here as desired, just as in the *Image Settings* menu. Note that selecting a “User” color temperature, enables the “White Level” options in the *Color Temperature Setup*—adjust as desired to define or change a “User” color temperature (see “White Levels”, below). Likewise, selecting “Interpolated Color” here activates the “Interpolated Color” slidebar for choosing a new interpolated color temperature for a connected source.

INTERPOLATED COLOR – Select this option if you need a specific color temperature that lies somewhere between one preset color temperature and another. Adjust the slidebar to define a new temperature which will be interpolated from the neighboring presets (for example, 7841 is interpolated from 6500 and 9300). It can be used any time and appears as a 4-digit temperature when in use. NOTE: This option is disabled unless you have a source connected and have selected “Interpolated Color” in the “Select Color Temp” pull-down list.

WHITE LEVELS –These 3 controls are adjustable only if a “User” choice is selected (in which case “User 1, 2, 3 or 4” appears at the top of the *Color Temperature Setup* menu). Their current values are shown for the active color temperature. Changing a white level here changes the drive (contrast) for that color, essentially creating a new color temperature that is “warmer” or “cooler”

Downloaded from Projectorscreen.com

etc. ***For maximum overall brightness, always keep at least one white level at 100.*** When you are satisfied with the new "User" temperature, it can be used immediately upon exit or it can be selected from either the *Image Settings* menu or the *Color Temperature Setup* menu as usual. You can re-define a "User" color temperature at any time using the *Color Temperature Setup* menu.

COLOR ENABLE – Select which color or colors you want to see, useful while working with color temperature white levels.

COPY FROM – Use this option to replace the currently selected "User" color temperature setup with that of another. This function can be particularly useful as a starting point for a new "User" color, or for accessing an unaltered factory default. It is disabled for all color temperatures *except* "User". See Figure 3.16.

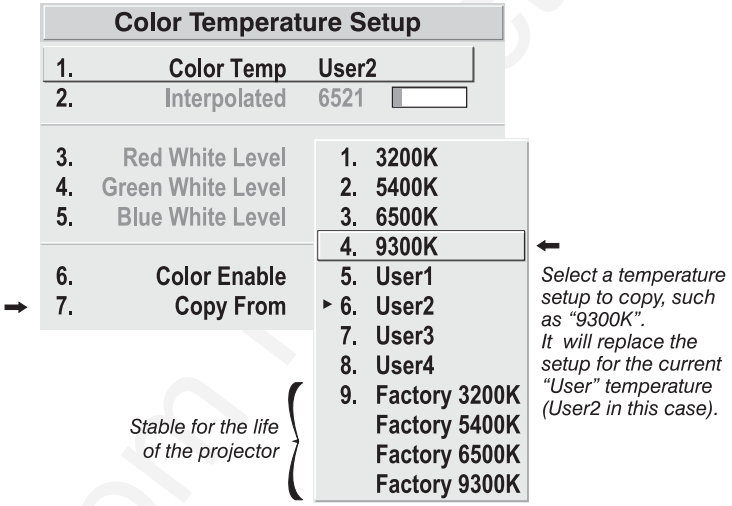

Figure 3.16. "Copy From"

To create a starting point: To set a starting point for a new custom user color temperature, select a user temperature, then highlight "Copy From" and select a temperature similar to what you want. Adjust white levels from there as desired.

To use a factory default: The preset color temperature setups (3200K, 5400K, 6500K and 9300K) can be altered from within the password-protected *Service* menu only—note that although such an alteration changes the *setup and appearance* for a preset, it does not change its *name*. If you suspect that you are using a preset temperature that has been altered and you want instead to use the original factory-calibrated color temperature without clearing the entire projector memory, you can use the "Copy From" option in the *Color Temperature Setup* menu to set up a "User" temperature with settings from a permanent factory preset:

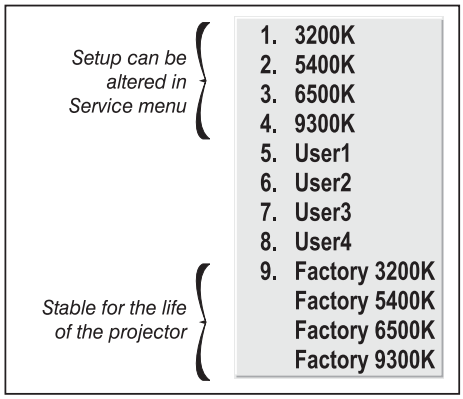

Figure 3.17. Presets and "Factory" Presets

1. Select the "User" color temperature you wish to update at the top of the *Color Temperature Setup* menu, such as "User 2".

2. From the “Copy From” list, select the matching temperature labeled “Factory” (such as “Factory 5400K”). These are the calibrated color temperatures set at manufacture—they remain intact for the life of the projector.
3. The setups for the “User” color temperature you selected at the top of the *Color Temperature Setup* menu will now be updated/replaced by those for the permanent factory calibrated temperature you selected in the “Copy From” list. Again, a “User” temperature can be altered at any time, if desired.

Video Options

Not applicable with graphics sources.

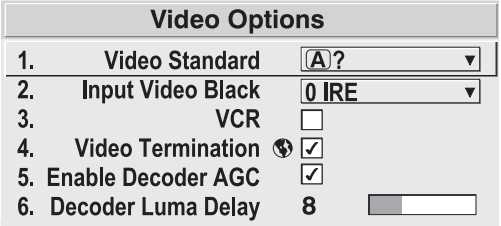

VIDEO STANDARD — The projector automatically detects the video standard present and displays the name of this standard here. Press ENTER to view or select a different video standard from a complete list available to the projector (some will appear disabled, depending on the current incoming signal). Selecting a specific standard forces the projector to process the signal according to this standard.

NOTE: This option should remain set at “Auto” for all instances EXCEPT: 1) a poor quality input signal or 2) a black-and-white video signal. In order to detect and display such signals, select the relevant standard.

INPUT VIDEO BLACK — This control compensates for incoming elevated black levels–called “setup”–that are present in certain video signals, and ensures that blacks on screen are neither crushed (i.e., with dark gray appearing black) nor excessively elevated (i.e., with black appearing dark gray). By default, the projector automatically determines the correct setting according to the type of incoming video signal:

- **0 IRE** – For DVD output with “enhanced black”, SECAM, most PAL standards, and Japanese NTSC.
- **7.5 IRE** – For most NTSC video signals.

For some types of video, you can override the setting. The control is disabled for other types of video (and all graphics sources). Generally, if black appears crushed when brightness = 50, choose “0 IRE”. If black appears excessively elevated, use “7.5 IRE”.

VCR – This control determines to what degree the projector tolerates signal disturbances. The correct setting is automatically determined and set according to the type of incoming source signal–for instance, there should be a checkmark for all VCR sources. The VCR option may require a change from its auto setting in very rare circumstances only, such as if you are having difficulty switching between two unusual and almost identical VGA computer sources. Otherwise, it is not necessary to change this option.

VIDEO TERMINATION — Enter a checkmark to terminate the video inputs 3 and 4 (75 Ω). The input should be terminated unless the signal loops through (continues) to another projector or display device, in which case only the last projector in the chain should be terminated.

☑	• *For all single free-standing projectors* • *For last projector in a network*
☐	• *For all networked projectors* ***except*** *the last one*

Downloaded from projector.com

ENABLE DECODER AGC – The "automatic gain control" affects decoded video images only. Enter a checkmark (default) for most decoded video sources—this activates the AGC circuit to ensure properly bright images. Delete the checkmark if a decoded video image exhibits strange color artifacts such as stripes in highly saturated colors, indicating an incompatibility between this source and the AGC.

DECODER LUMA DELAY – This control affects any incoming composite or S-video signal, delaying the luma signal (intensity) in relation to the chroma (color). In the image, increasing the luma delay will move luma (seen as a shadow where colors overlap) to the right slightly, with colors remaining in place. Decreasing this delay will move the shadow slightly to the left. If necessary for your current source, adjust so that no shadows occur with adjacent colors.

Input Levels

NOTES: ***1)*** *It is recommended that only experienced users use the* ***Input Levels*** *submenu—the projector automatically optimizes input levels for all but the most unusual of sources.* ***2)*** *Before attempting an input level adjustment, check that overall contrast and brightness settings are near 50* ***and*** *that color temperature is properly set up on an internal grayscale test pattern.* ***3)*** *There must be at least one white pixel present in the image for proper "Auto Input Level" function. Leave this control* ***off****.*

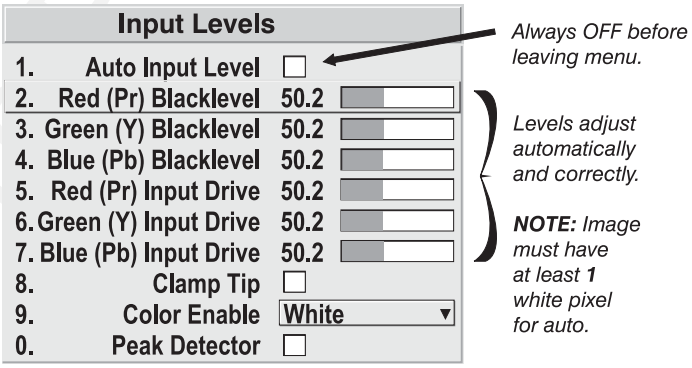

Figure 3.18. Input Levels Submenu

Good RGB or input levels—that is, the *drives* and *blacklevels* for each of the three colors, red, green and blue—ensure that images from analog sources other than decoded video have maximum contrast without crushing black or white. By default (and in an "Auto Setup" from the *Main* menu), the projector automatically determines the best input levels by monitoring image content and adjusting the controls appropriately—further adjustment is typically not required to obtain proper blacks or whites. *NOTE: This automatic adjustment requires at least* ***1 white pixel*** *in the image. Without a white pixel, input levels may produce skewed colors, particularly in non-video images.*

However, for a very unusual source exhibiting overly high blacklevels (most often caused by a noisy source that causes blacklevel spikes), an experienced user may prefer to use the *Input Levels* menu (see Figure 3.18). These adjustments, which are actually a calibration process to compensate for differences in sources and cabling, enables an experienced user to perfect the source image input levels. Note that *Input Levels* are of limited use with digital signals, but offer some ability to tweak poorly mastered source materials.

AUTO INPUT LEVEL – Keep off for virtually all sources (default). Temporarily enter a checkmark *only* if you are an experienced user and you have an unusual source that you feel needs further color temperature and/or input level adjustment. After entering a checkmark, wait for the six values to stabilize, then delete the checkmark and exit.

Downloaded from Projector.com

BLACKLEVELS AND DRIVES - To check your image and adjust these controls:

1. Make sure overall Contrast and Brightness are both set to near 50. *NOTE: Not required for "Auto" adjustment.*
   - Cont = 50 (approx.)
   - BRITE = 50 (approx.)
2. Check the color temperature setup using an internal grayscale test pattern, adjusting as desired to obtain a neutral grayscale. *NOTE: Not required for "Auto" adjustment.*
3. Make sure you are using an analog source ***not*** connected to **INPUT 3** or **INPUT 4**, as Input Levels are not applicable for digital sources or sources going through the decoder. A grayscale is recommended.
4. If the blacks and/or whites appear OK, input levels do not need adjustment. If black levels are too high (and/or whites are too low, which is rare), you likely have a noisy source that is producing skewed input levels. Continue with Step 5.
5. Temporarily enable "Auto" in the *Input Levels* submenu. Wait for all 6 values to stabilize. Alternatively, do *not* use "Auto"—reduce blacklevels manually instead. Judge by eye and change one or more of the six levels as necessary to obtain proper blacks and whites. You may want to see only a certain color while adjusting—use the "Color Enable" option (described below).
6. Delete the "Auto" checkmark and leave the *Input Levels* menu.

IMPORTANT: Do not use Input Levels to adjust color temperature. *This will distort Contrast and Brightness functions as well as color temperature.*

CLAMP TIP – This option (full name *sync tip clamping*) can brighten the image produced from certain high resolution, high frequency graphic sources. Enter a checkmark if the image appears unusually dim, if there are horizontal streaks across the image, or if there is significant color drift. Delete the checkmark if the image is either sufficiently bright or overly bright.

NOTE: The sync tip clamping option is not used for video sources or any RGB source with sync information on the video (e.g., sync-on-green).

COLOR ENABLE – Select which color or colors you want to see, useful while working with color temperature white levels or input levels.

NOTES: ***1)*** *Input levels apply for the current source only, but for any color temperature used.* ***2)*** *Assuming that color temperature has been set up based on the internal test patterns, you can then set up input levels for a given source so that it matches the color temperature of the internal test patterns.*

PEAK DETECTOR – The Peak Detector is fast method of defining individual input levels, and may improve the accuracy of input levels set by the Auto Input level function. Enabling the Peak Detector activates a special operating mode that detects ***only*** pixels that are considered black or white—all other levels are displayed as a mid-level gray. When used with a 16-step grayscale pattern, where the black and white bands are known to be at the edges of the image, you can watch these isolated areas while adjusting individual blacklevels and input drives as necessary. Images from this source will then display correct blacks and whites without crushing.

Downloaded from Manuals.com

See Figure 3.19.

1) Display a 16 level grayscale test pattern from the desired external source, and enter a checkmark in the Peak Detector checkbox. *NOTE: The "Peak Detector" will initially render the grayscale as a uniform gray field before adjustment.*
2) Display one primary color (use *Color Enable* to select).
3) For the current color, adjust its corresponding "Blacklevel" slidebar ***just*** until a single band of black appears at one edge of the screen. This band represents the first band of the grayscale pattern, which should be 100% black. Do not adjust too far.
4) With the same color still active, adjust its corresponding "Input Drive" slidebar ***just*** until a single band of white appears at the opposite edge of the screen. This band represents the last band of the grayscale pattern, which should be 100% white. Do not adjust too far.
5) Go back and check the black band—adjust the blacklevel slidebar if necessary. Adjustments are related, so you may have to go back and forth until both bands are ***just*** optimized.
6) Repeat Steps 2-5 with the other two remaining primary colors. When each primary color shows ***one*** optimized black band and white band, the input levels for this source are correctly set. Upon exiting the *Input Levels* menu, the Peak Detector checkbox will clear.

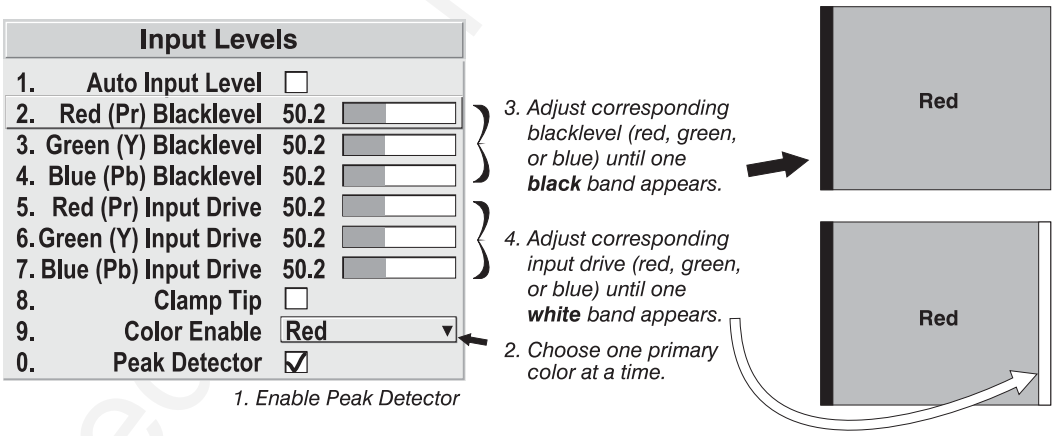

Figure 3.19. Adjusting Input Levels Using the Peak Detector
(RED EXAMPLE SHOWN)

Processing Mode

This control determines the projector's processing route for the incoming signal.

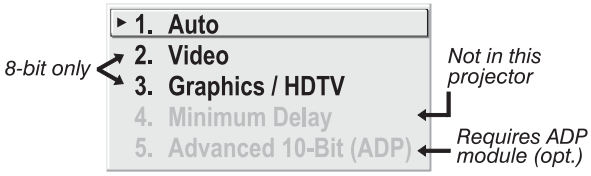

1) **AUTO** (default): The projector will automatically select the correct processing mode according to what input signal it detects. Use "Auto" unless you want or need to override its performance and apply a specific mode instead.
2) **VIDEO:** Performs 15 kHz NTSC/PAL video de-interlacing, regardless of signal type. Note that this option utilizes 8-bit processing.
3) **GRAPHICS / HDTV:** Performs basic de-interlacing and scaling, regardless of signal type. Note that this option utilizes 8-bit processing.
4) **MINIMUM DELAY:** Not available in this projector.

Downloaded from Projector.com

5) **ADVANCED 10-BIT (ADP):** Uses 10-bit processing instead of the standard 8-bit processing provided in the projector, resulting in smoother and clearer details in video images. This feature requires installation of optional internal hardware—the *Advanced Digital Processing Module*—and is disabled unless this module is present. It activates full source-to-screen 10-bit processing for a digital video source, typically connected via the optional *Serial Digital Input Module* or the *Digital HDTV Input Module* (**INPUT 2**). Images from analog signals (**INPUT 1, 3** or **4**) will also be noticeably improved, however these signals are first converted with 8-bit processing before routing through the ADP module.

Motion Filter

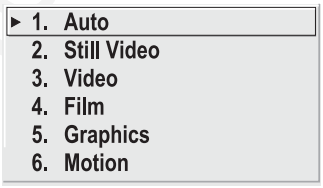

This control is most useful for smoothing out moving images from interlaced sources. In most cases the proper Motion Filter setting is automatically determined according to the type of incoming source signal. However, if your source is noisy and/or inconsistent you may wish to "force" a setting to ensure stable processing for this source—if desired, override the default "Auto" setting by selecting the appropriate motion filter:

1) **AUTO:** The projector will automatically use the correct motion filter according to the incoming signal. Note that the "Still Video" filter will be applied for RGB *non*-HDTV interlaced signals, and the "Motion" filter will be applied for RGB HDTV interlaced sources.
2) **STILL VIDEO:** For static images with no motion, such as graphics from a CD. *Note: Applied for RGB* ***non****-HDTV interlaced signals.*
3) **VIDEO:** For video images that did not originate from film, or for moving computer-generated images. *NOTE: Applied for RGB HDTV interlaced signals.*
4) **FILM:** For video images that originated from film. This will optimize image quality and stability.
   NOTES: ***1)*** *For 60 Hz video standards: NTSC, PAL M, PAL 60.* ***2)*** *Also recommend for PAL video standard if the ADP module is present—note that you must select film mode manually in this case.* ***3)*** *Signals can be from RGB video, composite video or S-video sources.*
5) **GRAPHICS:** For graphic images.
6) **MOTION:** For video images that did not originate from film, or for moving computer-generated images. *NOTE: Applied for RGB HDTV interlaced signals.*

Dark Interval

Not available in this projector.

Invert Stereo3D

Not available in this projector.

White Boost

Not available in this projector.

PLL Loop Gain – See description in ***Size and Position***.

Downloaded from Projector.com

Noise Reduction – requires optional ADP Module

Select the amount of image noise reduction desired, with “0” applying no noise reduction (default) and “10” applying maximum noise reduction. The higher the value, the softer the image.

Horizontal Filter – requires optional ADP Module

Select the amount of horizontal filtering desired for the current source. Note that the default setting of “0” allows the projector to optimize the amount of horizontal filtering according to the current source, and is the recommended setting for most situations. You can override this by selecting a value from 1-10, with “1” applying no filtering and “10” applying maximum filtering. High filtering levels will soften the image slightly, particularly evident along vertical edges.

Vertical Filter - requires optional ADP Module

Select the amount of vertical filtering desired for the current source. Note that the default setting of “0” allows the projector to optimize the amount of vertical filtering according to the current source, and is the recommended setting for most situations. You can override this by selecting a value from 1-10, with “1” applying no filtering and “10” applying maximum filtering. High filtering levels will soften the image slightly, particularly evident along horizontal edges.

3.7 Configuring System Parameters

Use the *Configuration* menu to display and/or set global system operating parameters that are typically in effect regardless of source, or to work with other settings that are not unique to the current incoming source.

NOTE: For experienced users/technicians only.

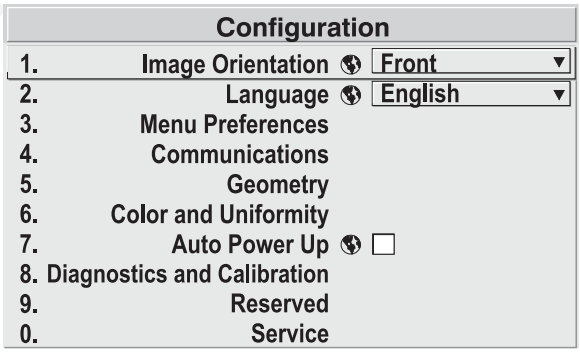

System Configuration And Diagnostics

In the *Configuration* menu, you can define a variety of general system parameters to suit your preferences, run certain diagnostic tests, and access the *Service* Menu (password required). Settings in the *Configuration* menu will typically apply regardless of the type of source present.

Image Orientation

Use this pull down list to change the orientation of the image according to the orientation of your projector. If the setting is incorrect, projected images will be reversed and/or upside down, See ***2.6, Operating Orientation*** for an illustrated explanation.

Language

Choose from English, French, Spanish, German and Italian language. The menus will change immediately upon selection.

Downloaded from Projector.com

Menu Preferences

Use the options in this submenu to adjust the appearance, content and/or location of on-screen menus displayed in presentation level.

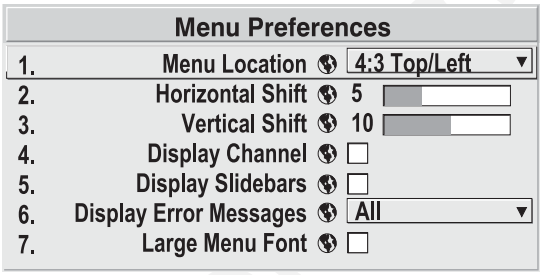

Figure 3.20. Menu Preferences Menu

MENU LOCATION — Use the pull down list to choose a pre-defined or customized default location for the display of on-screen menus.

To create a custom menu location, choose a preset that is closest to the desired area. Then adjust the slidebars of *Horizontal Shift* and *Vertical Shift* to move the menu to the desired location. To prevent cropping of larger menus, avoid locations too close to a corner or edge.

HORIZONTAL SHIFT AND MENU SHIFT — Shift your menus as desired, creating a customized menu location.

DISPLAY CHANNEL LIST — Enter a checkmark if you want to see a scrollable channel list whenever you press Chan from your presentation. These channels must be marked with a list icon in the *Channel Setup* menu. This option also enables on-screen feedback when using the Input key. If you prefer to hide the channel list and input dialog box while switching channels and sources during a presentation, do not enter a checkmark.

NOTE: The Channel List and input dialog box cannot be hidden when a menu is displayed.

DISPLAY SLIDEBARS — Enter a checkmark to superimpose a small slidebar over the current image whenever an adjustable parameter is selected directly with a key (the option does not affect slidebars in menus) such as Pixel, Position, CONT, or Bright. If "Display slidebars" is unchecked, these slidebars can still be accessed, but will be hidden during adjustment.

DISPLAY ERROR MESSAGES — Choose in what way you want to be notified of errors detected in either the incoming signal or projector. Select "Screen" or "All" to see a brief on-screen messages or select "RS232" to be see messages via RS232 and RS-422 serial communication only. To disable error message display, select "Off".

LARGE MENU FONT — Enter a checkmark to enlarge menus and their text. You may have to adjust "Menu Location" to accommodate the increased menu area.

Communications

This submenu of the *Configuration* menu is fully described in a separate *System Communications* subsection later in *Section 3*.

Downloaded from Projector.com

Geometry

From the *Configuration* submenu, select the *Geometry* submenu to adjust your display shape, work with the lens or test patterns, or define a multi-screen mapping of incoming source material. The "Reserved" option has no function.

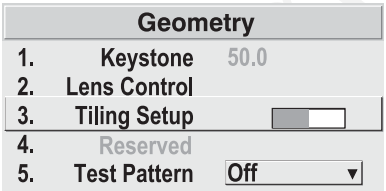

Figure 3.21. Geometry Menu

KEYSTONE — Optimized for *X10* only. Refer to *Image Size and Position* in *3.6, Adjusting the Image*. Keystone adjustment is duplicated here for convenience during setup.

LENS CONTROL — For a full description of the *Lens Control* menu, see *3.3, Using the Keypad* (Lens key) and *2.8, Zoom, Focus and Lens Offset*.

TILING SETUP — See *3.10, Using Multiple Projectors*. Control is duplicated here for convenience during setup.

TEST PATTERNS — Use the pull-down list to select and display an internal test pattern. Select OFF to turn off the display of a test pattern.

(SHORT CUT: Use Test key.)

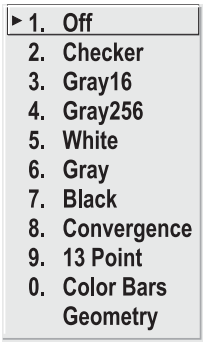

Color and Uniformity

Use the *Color and Uniformity* submenu for access to *Color Temperature Setup*. "Reserved" options have no function.

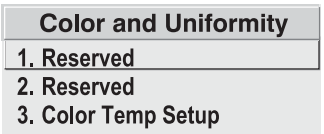

COLOR TEMP SETUP — See *Image Settings*. This function is offered in here for convenient access.

Auto Power Up

Enter a check mark to enable the projector to automatically power up after losing power due to a power failure or due to unplugging the projector during operation. Note that unsaved display adjustments may be lost.

Diagnostics and Calibration

From the *Diagnostics and Calibration* submenu you can access several options for testing and setup of images. You can work with test patterns and view specific colors, freeze an image for inspection, and/or access the *Odd Pixel Adjustment* menu for precision settings of offset and gain. "Reserved" options have no function.

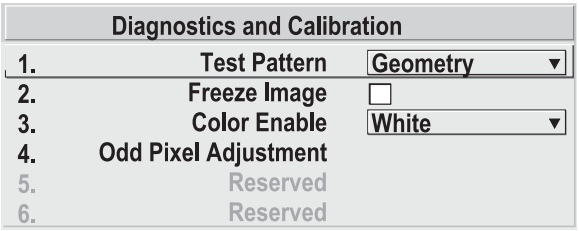

TEST PATTERN — Refer to description under *Geometry* submenu.

COLOR ENABLE — Refer to description under *Image Settings*.

Downloaded from Projector.com

FREEZE IMAGE — Enter a check mark to freeze (stop) an image at a single frame. This diagnostic tool is useful if you need to examine in detail a still version of the incoming image that cannot be "frozen" at the source. For example, in moving images it is sometimes difficult to observe artifacts such as external deinterlacing/resizing and signal noise. Remove the checkmark to return back to normal.

ODD PIXEL ADJUSTMENT – *For sources with Color Space set to RGB only.*

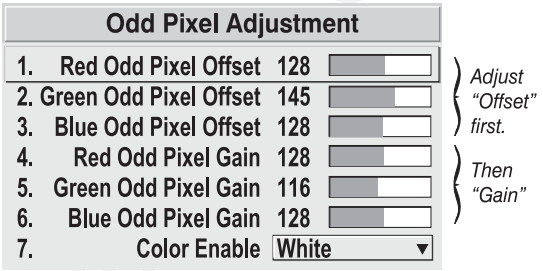

When using certain RGB sources with still images, you may need to adjust the normal gain or offset of odd pixels in relation to even pixels. This will smooth out very narrow (1-pixel wide) "checks" or vertical stripes that indicate adjacent "on" and "off" pixels. You can remove these patterns as follows:

1) Use an external grayscale test pattern with both dark and light gray areas.

2) Display the image in its native resolution – select "*No Resizing***"** by accessing *Resize Preset* in *Size and Position menu.*

3) Display a single color—choose from a *"Color Enable"* list or use the Func key shortcuts indicated on the back of the keypad.

4) Examine an area of darkest gray (but not black). If there is a 1-pixel wide pattern present, adjust "*Odd Pixel Adjustment*" ***offset*** for the current color. Stop when the pattern disappears and the area is smooth.

5) Examine an area of lightest gray (not white). If there is a 1-pixel wide pattern present, adjust "*Odd Pixel Adjustment*" ***gain*** for the current color. Stop when the pattern disappears and the area is smooth.

6) Repeat for each color, adjusting offset then gain for each.

NOTES: ***1)*** *Adjust offset before gain, since offset affects gain.* ***2)*** *A value of 128 represents no change in normal odd pixel offset or gain.* ***3)*** *Odd Pixel Adjustment eliminates "1 pixel on, 1 pixel off" patterns only, not any type of larger patterns.*

Reserved

No function for these options.

Service

The *Service* submenu offers the ability to enable or disable service passwords, and to work with factory-defined color temperatures and other functions. This submenu is password-protected and intended for use by qualified service technicians only.

Downloaded from Projecto.com

System Communications

Use the checkboxes and pull-down lists in the *Communications* submenu to alter the methods or types of communication to and from one or more projectors. *NOTE: Changes made to the* ***Communications*** *submenu will be in effect upon exit of the menu.*

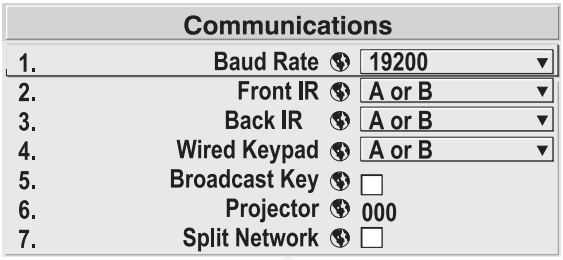

Figure 3.22. Communications Submenu

Baud Rate

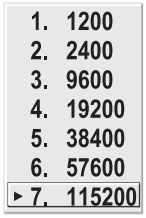

The baud rate setting determines the speed of communication to and from the projector. By default, the projector baud rate is set to 19200. Setting the correct speed is important when you are controlling the projector with an external device such as a computer or another projector via an RS-232 or RS-422 port. You must set the projector baud rate at these ports to match the baud rate of the controlling device. If you are unsure about what baud rate to choose, refer to the documentation for the controlling device. In an existing network, if you discover that a projector has the wrong baud rate, make sure to use the pull-down list and select the correct baud rate with the Enter key—do not just scroll this control with ◄– and +► keys.

NOTE: ***1)*** *The baud rate setting does not affect the switcher port, which is always 9600 baud.* ***2)*** *See* ***Serial Port Connections*** *and* ***Appendix D*** *for more information about cable connections between devices.*

Front IR / Back IR

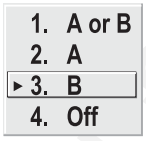

As described in *Section 2*, the standard IR remote keypad is capable of sending data to the projector in either one of two protocols called **A** or **B**. Likewise, the front and rear IR sensors on the projector can be set to accept IR data accordingly, responding to **A**, **B** or both. The projector's **A or B** default is adequate for most single-projector installations. Select a specific protocol to prevent interference when you are controlling two protectors in the same area and want to work with one projector at a time.

Note that the front and rear IR sensors cannot respond to *different* protocols–if you change a protocol for either sensor to anything other than **OFF**, the protocol for the other sensor also changes. For example, setting *Front IR* to **B** also changes the *Back IR* to **B**. If you want only *one* sensor to respond to a particular protocol—**A**, **B**, or **A or B**—disable the other sensor by setting its protocol to **OFF**.

If you want to disable *both* IR sensors, you cannot use the IR remote keypad to select the second **OFF** setting. This safeguard prevents accidentally disabling a keypad while you are using it. Instead, use either the built-in keypad or the wired remote to set the remaining active sensor to **OFF**. The projector will no longer respond to an IR remote keypad.

IMPORTANT
Keep at "A OR B" unless you are sure of the current IR keypad protocol.

NOTES: ***1)*** *The IR remote keypad for this projector is set at manufacture to "Protocol A". See* ***2.10, Keypad Protocols and Conversion*** *for information about*

Downloaded from Projector

changing the keypad protocol. ***2)*** *A key press from a conflicting protocol will cause a single yellow flash on the Status LED located in the lower right corner of the rear projector panel.*

Wired Keypad

Like the IR remote keypad, the optional wired keypad is either a "Protocol **A**" keypad (default) or a "Protocol **B**" keypad. Likewise, the projector can be set to accept wired keypad data accordingly, responding to **A** or **B**. If desired, you can prohibit the projector from responding to a particular wired keypad protocol, or you can ensure that the projector responds to either protocol (default). You can also prevent the projector from responding to the keypad entirely. In the pull-down list, select the desired protocol.

NOTE: The wired keypad for this projector is set at manufacture to "Protocol A". See ***2.10, Keypad Protocols and Conversion*** *for information about changing the keypad protocol.*

ADDING A WIRED KEYPAD PROTOCOL: To add a protocol, select the **A or B** option.

CHANGING A WIRED KEYPAD PROTOCOL: As a safeguard, you cannot accidentally select an option in the “Wired Keypad” list that would disable the wired keypad during use, since such options are automatically disabled in the list. In other words, you cannot switch to the opposite protocol or select **OFF** using the wired keypad. Instead, if you want to quickly change to the other protocol, you may find it more convenient to use one of the other keypads (the built-in keypad or the IR remote) to execute the protocol change for the wired keypad. The projector will now recognize only the opposing wired keypad protocol. Or, if you prefer, use the wired keypad to safely change its own protocol:

1. Select the **A or B** option. This will ensure that once your keypad is manually changed (see Step 2), it will still be recognized by the projector.
2. Unplug the keypad and change the protocol in the keypad as desired. Do this either by entering the short-cut software command or by hard-wiring the keypad as described in *2.10, Keypad Protocols and Conversion*.
3. Plug the keypad back into the projector. Return to the *Communications* menu and select the new protocol you have just set up in the wired keypad.

TURNING OFF THE WIRED KEYPAD: If you want to disable the wired keypad entirely, you cannot use it to select the **OFF** option. This safeguard prevents you from accidentally disabling the wired keypad during use. Instead, use either the built-in keypad or the IR remote keypad to select **OFF**. The projector will no longer respond to the wired keypad.

Broadcast Key

Enter a checkmark if you want keypad commands sent to one projector to be relayed to all projectors in a network. Note the PROJ key will temporarily “override” the effect of a broadcast setting and allow you to control a specific projector when necessary. Make sure to remove the checkmark if using the split network feature.

Downloaded from Projector.com

Projector

Enter a three-digit number (such as "001") to assign or change a number to the projector currently in use – if the current projector already has a number assigned, that number will appear here (see right). Numerical identity for projectors is required whenever you want to communicate with a single projector within a multiple-projector application (see PROJ key description in 3.3, Using the Keypad). If you make a mistake in assigning or changing the projector number, press Exit to cancel.

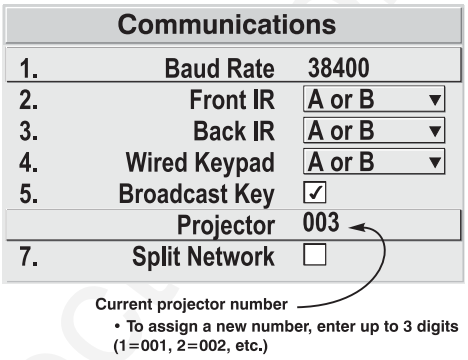

For complete information about controlling multiple projectors, see ***3.10, Using Multiple Projectors***.

Split Network

Enter a checkmark if you have a network in which each projector is connected via both its RS-232 and RS-422 serial ports (Figure 3.23A). At each projector, serial communications will then remain on either its RS-232 or RS-422 path (depending on the controller) rather than being broadcast to all 3 remaining serial ports. Should a projector or path ever fail, the other path will be available as a back-up.

The Split Network feature is unnecessary when only a single serial link is connected between any two projectors (Figure 3.23B), and will cause communication errors if these single links vary from RS-232 to RS-422 anywhere in the network. Likewise, if you have two serial links connected between any two projectors, failure to use the Split Network checkbox can also cause a communication error.

NOTES: 1) Requires double serial links—RS-232 and RS-422—between all projectors in a network. 2) Set each projector's Broadcast Key OFF. 3) Keypads cannot broadcast in a split network—use controller(s) instead. 4) Do not use a split network when downloading new projector software to a network.

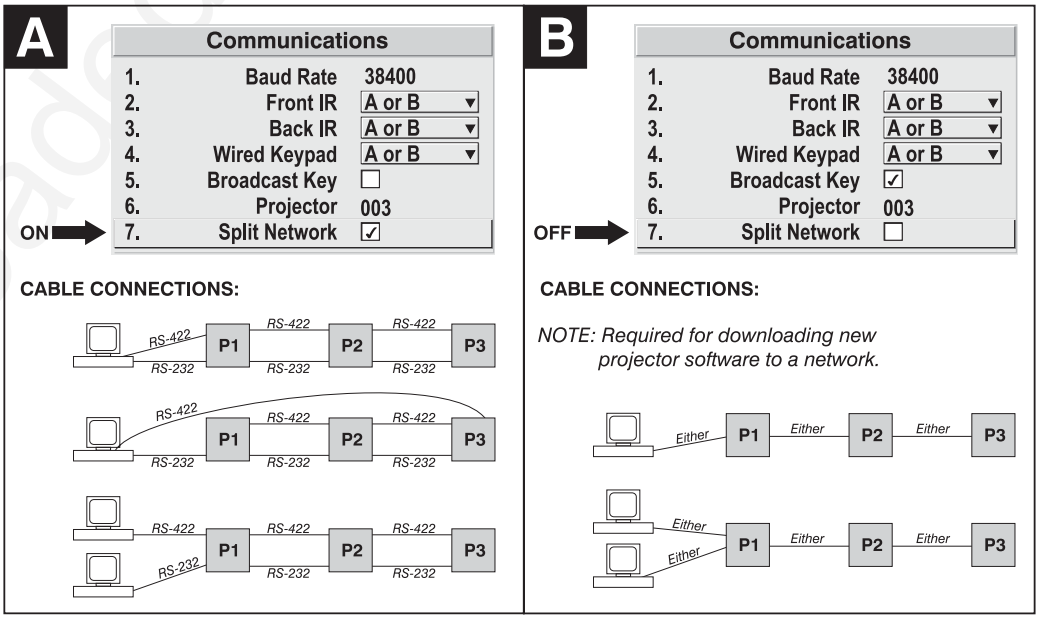

Figure 3.23. Split Network Checkbox — ON vs. OFF

Downloaded from Projecto.com

3.8 Working With the Lamp

Whenever you install a new lamp in the projector you must access the *Lamp* submenu (available from *Main*) and record the lamp serial number in the projector's memory. You can also choose the lamp operation mode you prefer, such as maintaining a specific intensity (light output) or power level, and define the expected lamp life. Read-only information includes the lamp serial number and age.

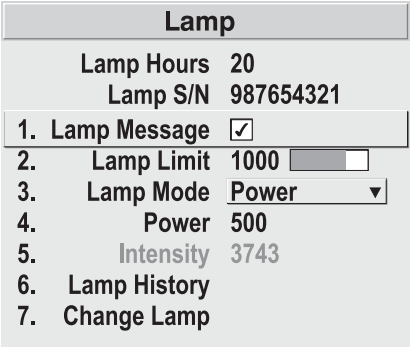

Figure 3.24. Lamp Menu

*NOTE: See **4.4, Replacing the Lamp and Filter** for complete instructions on installing a new lamp in the projector.*

LAMP HOURS shows the number of hours logged on the current lamp. Whenever you record a new lamp serial number, this value automatically resets to "0", where it begins to log time for the new lamp. *NOTE: Read-only.* This information also appears in the *Status* menu.

LAMP S/N is the serial number recorded for the current lamp. When you install a new lamp and enter its serial number, the number will appear here in the *Lamp* menu. *NOTE: Read-only.*

Enter a checkmark for **LAMP MESSAGE** if you want to enable a warning message upon power-up that the lamp has reached the specified lamp limit and should be replaced. Delete the checkmark if you do not want to see this warning—instead, when your lamp expires, only the status information on the back of the projector will provide the warning to replace the lamp.

*NOTES: **1)** It is recommended that the Lamp Message checkbox remain enabled. **2)** When a lamp warning message appears, press* [EXIT] *to temporarily cancel the message. The message will continued to appear upon power-up until you install a new lamp.*

Set **LAMP LIMIT** to the number of hours you expect to log on the current lamp before replacing it. The recommended limit is 1000 hours.

*NOTES: **1)** If you change modes over the life of a lamp, the lamp limit you originally expected may no longer be possible. **2)** Turning the lamp on and off reduces lamp life significantly, as do other factors.*

Set which **LAMP MODE** you want to use in order to control the light output—you can choose to run the lamp as bright as possible (i.e., using maximum power—this is the default upon power up), or you can power the lamp with a specific wattage from 1400-1900. Although there are exceptions, in most lamps higher light output or higher power settings can shorten lamp life.

Figure 3.25.

Use the lamp mode that best suits your brightness needs. For example, in a tiled application you may want to precisely match brightness levels between adjacent images—judge by eye and set each individual **Lamp Power** setting as necessary. Or you may simply always want images to be as much bright as possible—choose **Max Brightness**.

Downloaded from Projector

Lamp modes are described below:

- **Max Brightness:** The lamp will always burn as brightly as possible, driven by maximum power available in the projector (see *Section 5, Specifications*). Keep in mind that the "maximum brightness" for any lamp gradually diminishes with age—images will become dimmer over time.

- **Intensity:** Not available in this projector model.

- **Power:** The power supplied to the lamp will remain at a specified watt level. Once you select this option, enter the number of watts representing the power level you wish to maintain. See "**Power**" below.

POWER - The number shown here indicates how many watts are applied to the lamp. Set from 1400-1900 watts as desired, keeping in mind that lower power levels produce dimmer images. When in either "**Power**" or **Max Brightness** modes, the power level remains constant. Specifying a power level of 1900 is the same as operating in **Max Brightness** mode.

NOTES: Power level can be set only if the lamp is in "power" mode.

INTENSITY – Not available in this projector model.

LAMP HISTORY - This read-only option lists the most lamps most recently installed and recorded in the projector. *Lamp History* automatically updates whenever you record a new lamp serial number—the new lamp is added to the bottom of the list.

Lamp History	
S/N	Hours
1234	1999
5678	27

Use **CHANGE LAMP** to record the serial number for a newly installed lamp.

In the *Lamp S/N* window, use the number text entry keys to record the new lamp serial number, and press ENTER again to accept the change. See *Using Slidebars and Other Controls* if you need help entering the number. Once entered, the new lamp serial number will be added to the *Lamp History* menu and the *Lamp Hours* timer will reset to "0". *Lamp Mode* and *Lamp Limit* remain as they were for the previous lamp, and can be changed at any time.

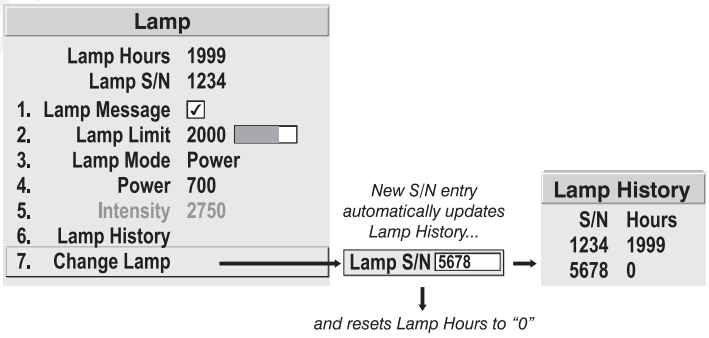

Figure 3.26. Recording the New Lamp Serial Number

*NOTE: Enter a serial number **only** if you have just installed a new lamp. This will help ensure that lamp timer is not reset on an old lamp and that the number of hours logged on the lamp will be accurate.*

⚠ IMPORTANT ⚠

Always DO record the serial number of a NEW lamp.

Downloaded from Projector.com

3.9 Projector Status

This read-only menu lists a variety of details about the standard and optional components currently in use on the projector. Refer to the *Status* menu for versions of hardware (left side) and software (right side) installed, the number of lamp hours logged in total and for a specific period (such as a rental period), and for your projector model name and serial number. In addition, the *Status* menu identifies the current channel, switcher, slot and frequencies.

Use [▲ON], [▼OFF], [◄–] or [+►] to see additional *Status* information.

Status

Scroll to see more

Model	Roadie	S12 *(or X10)*	
S/N	123456789		
Lamp Hours	20	Lamp Counter	5
Projector Hours	152	Native Resolution	1280 x 1024
Chan Name		Sync Type	Tri-Level on HC input
Chan Number	02	Sync	33.72 kHz – i59.94 Hz
Switcher	0 (projector)		
Slot	1 (Input 1)		
IPM	6.2	Software	2.1
Interconnect	2.2	Boot	1.4
LCD HW	2.3	LCD SW	1.0
tx Bridge	2.3 T1	MCM PIC	4.0
rx Bridge	2.4	MCM HC11	2.32
Decoder	1.3		
Loop Through	1.0		
FC1	26.1	PLL	23.1.003
ZX1	3.1	Decoder	1.6.008 T5

Figure 3.27. Status Menu (SAMPLE)

3.10 Using Multiple Projectors

When working with multiple projectors, you may want to use the RS-232 or RS-422 serial ports to chain the projectors together in a network that you control from either a keypad or a computer/controller (*see 2.9, Serial Port Connections*). Or you may prefer that each projector stands alone, in which case you will probably use a single IR remote keypad. In either case, you can switch back and forth between broadcasting to all projectors or controlling each projector individually.

Assigning a "Projector#"

Make sure you have assigned a unique projector number to each projector present — this number will be required in order get the exclusive attention of an individual projector. To assign a projector number:

Press [Menu] and select the *Communications* menu. In the *Communications* menu, scroll down to "Projector#" and enter a three-digit number (000 to 999) for identifying the current projector. Press [Enter] to accept the entry, or [Exit] to cancel.

Repeat for each projector, using a unique three-digit number for each. Once every projector has its own number, you can begin to control the network.

Controlling One Projector

First make certain that only one (any) projector has its "Broadcast Keys" option selected (checked) and IR sensors enabled — the remaining projectors must have the

"Broadcast Keys" option unchecked and their keypads disabled (do this in *Menu Preferences* menu). The "Broadcast Keys" projector will then relay keypad commands to the other projectors. If using a wired remote, make sure to select the "Broadcast Keys" option for the projector to which the wired remote is connected.

To work with a single projector, press PROJ to display an editable window from each projector. Enter the three-digit number you have assigned to the projector you wish to control. All keypad commands will then affect this projector exclusively until you press PROJ again and enter a different number, or until you switch to broadcast mode (below).

NOTES: ***1)*** *If you are using a computer or controller to issue commands, use the correct RS-232 software command to gain control of a single projector.*

Broadcasting to All Projectors PROJ PROJ

First make certain that only one projector has its "Broadcast Keys" option selected (checked) — the remaining projectors must have the option unchecked and their keypads disabled (do this in *Menu Preferences* menu). The "Broadcast Keys" projector will then relay keypad commands to the others. If using a wired remote, make sure to select the "Broadcast Keys" option for the projector to which the wired remote is connected.

On either the IR remote or wired keypad, press PROJ to display the projector box. Press PROJ again *without* entering a number — the keypad commands will now affect all projectors.

NOTE: ***1)*** *If you are using a computer or controller to issue commands, use the correct RS-232 software command to broadcast.*

Tiling An Image Across Multiple Displays

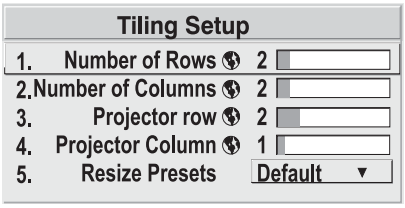

Tiling an image means that multiple adjacent displays work together to form a single image, like a tiles in a mosaic. This *videowall* concept contrasts with other multiple-projector applications in which each display is a complete and independent image. Use the *Tiling Setup* menu as described below (accessed via the *Size and Position* menu or *Configuration/Geometry* menu) to configure a maximum of 16 displays (4 x 4) into one single-image videowall or *tiling array*.

Defining the Videowall

NUMBER OF ROWS – Use the slidebar to define the number of rows (1-4) present in your videowall. Each projector must have the same setting.

NUMBER OF COLUMNS – Use the slidebar to define the number of columns (1-4) present in your videowall. Each projector must have the same setting.

PROJECTOR ROW and PROJECTOR COLUMN – For each projector, use these two slidebars to define the projector's unique row-and-column location within the videowall. Any videowall begins with the top left corner display as Row 1, Column 1. See Figure 3.28.

Downloaded from Projector.com

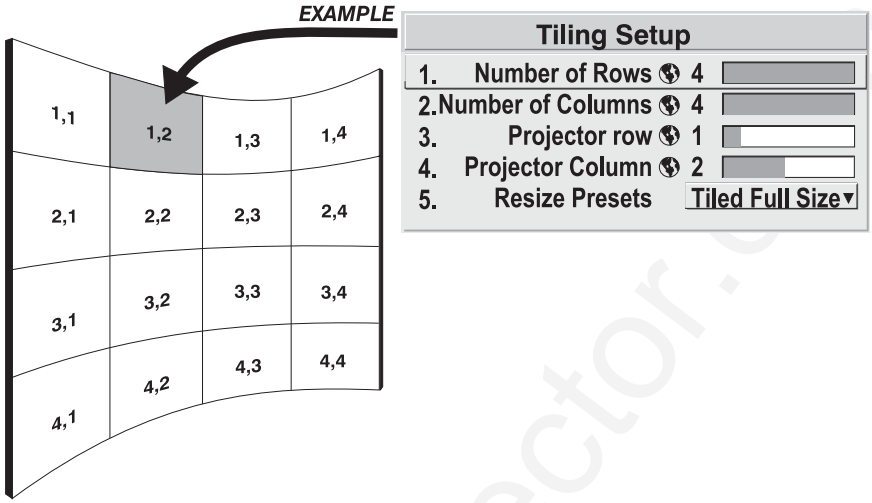

Figure 3.28. Tiling Setup (Example of 4x4 Array)

Resizing the Videowall Image

RESIZE PRESETS – When your multiple-projector tiled array has been defined as described above, select a desired *tiled* resizing method. Sections of incoming data will then automatically map to the appropriate "row,column" address in your videowall, filling the wall with a complete image that is scaled as you have specified.

NOTES: ***1)*** *Tiled resizing options are enabled only if you have defined an array of two or more projectors as described above.* ***2)*** *Use the same tiled resizing option for each projector in your array, regardless of the number of rows and columns in the array.* ***3)*** *Whether the wall produces a black border or a cropped image depends on the aspect ratio and resolution of the incoming source.*

- For each projector, select "Tiled Full Size" to fully fill all screens in the wall. Each section of incoming data will be scaled horizontally and vertically to fill the screen to which it automatically maps. See right. Note this option does *not* necessarily maintain aspect ratio.

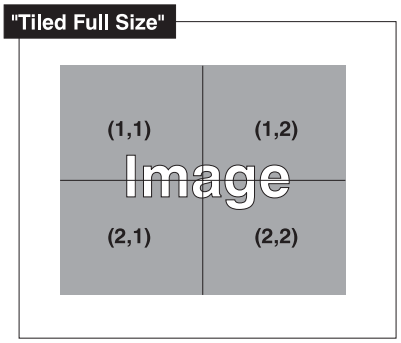

- For each projector, select "Tiled Full Width" to fill the videowall from left-to-right while maintaining aspect ratio. This typically creates a top and bottom black border on the wall, and is best suited for HDTV signals. See right.

  NOTE FOR LARGE ARRAYS: ***1)*** *In large arrays having 3 or 4 rows, the center row(s) will automatically fill.* ***2)*** *Screens with very little or no image will be blanked (cropped).*

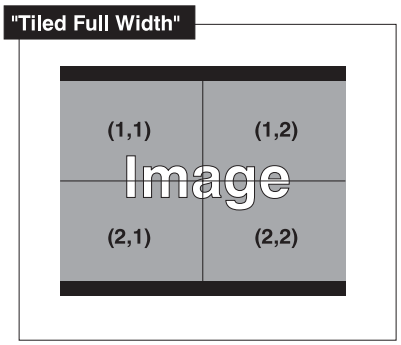

Downloaded from Projector.com

- For each projector, select “Tiled Full Height” to fill the videowall from top-to-bottom while maintaining the incoming aspect ratio. This typically creates a black border on the left and right edges of the wall. See right.

  NOTE FOR LARGE ARRAYS: ***1)*** *In large arrays having 3 or 4 columns/rows, the center screen(s) will automatically fill.* ***2)*** *Screens having very little or no image will be blanked (cropped).*

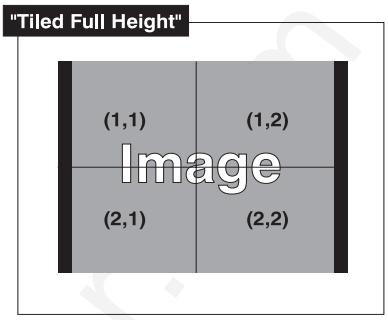

- For each projector, select “Tiled Anamorphic” to fill the videowall from left-to-right while maintaining the incoming “widescreen” (anamorphic) aspect ratio of 16:9. This typically creates a black border at the top and bottom edges of the wall. See right.

  NOTE FOR LARGE ARRAYS: ***1)*** *In large arrays having 3 or 4 columns/rows, the center screen(s) will automatically fill.* ***2)*** *Screens having very little or no image will be blanked (cropped).*

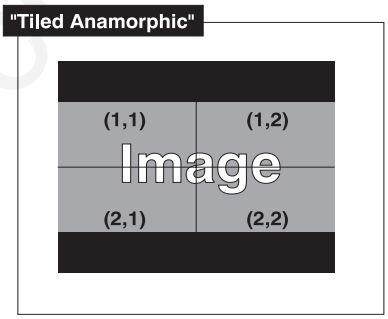

Large Displays and 10-bit Processing

When processing sources through the optional ADP module, you may have to crop the extreme top and bottom edges of the image OR map to fewer screens (see right).

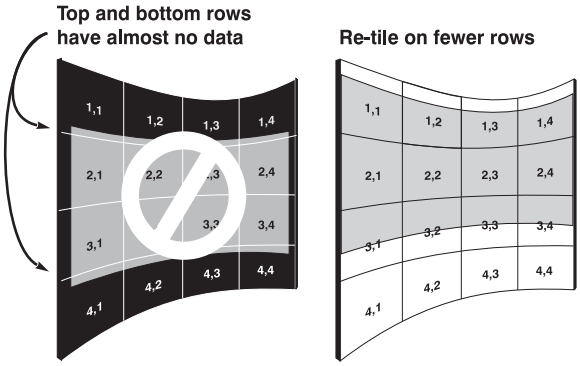

3.11 Error Conditions

Occasionally the projector may encounter an error condition that can interrupt normal operation. Such a condition can be caused by a simple invalid keypad entry, an input signal error (most common) or a system error.

If you would like to be notified on-screen of such errors, select the “Screen” option from the “Display Error Messages” pull-down list (in *Menu Preferences* menu). If you would like to be notified via a serial communication only, select the “RS-232” option instead. To receive both notifications, select “All”. To disable error messages (except for “invalid user key entry”, which can’t be hidden), select “Off”.

NOTE: Except for invalid user key presses, error messages also always appear in the LCD Status Display window adjacent to the keypad at the rear of the projector.

Downloaded from Projector.com

User Errors

Invalid User Entry

A keypad entry not recognized by the projector will trigger an on-screen error message describing the problem. For example, if you specify a channel number that is not available, the message "*Invalid Channel* will appear. Or if you try to enter the wrong password, you'll see "*Invalid Password*". Press Enter or Exit to clear the message and try again.

NOTE: The on-screen display of "Invalid User Entry" messages cannot be disabled, even if ***Display Error Messages*** *has been set to "Off".*

Input Signal Errors

Input signal error messages appear when you are in presentation level (i.e., when there are no menus present) and have selected an input on which the projector detects a problem. While menus remain operational and any key press will temporarily remove the error message, you must resolve the signal problem in order to permanently eliminate the message.

NOTE: Input signal messages appear on-screen only if ***Display Error Messages*** *has been set to "Screen" or "All".*

No Signal

The message *"No signal"* appears when there is no signal detected at the selected input. Both HSYNC and VSYNC are inactive and the screen background is black. Connect or correct the signal, or select another input.

Bad Sync

The message *"Bad Sync"* is displayed when HSYNC or VSYNC are active but the signal cannot be displayed. Such a condition occurs when only one of the two signals is present, or when either signal is unstable or of the wrong frequency. Correct the signal or select another input.

Other Signal Error Messages

In addition to the common *"Bad Sync"* and "*No Signal*" errors, you may encounter a signal error message indicating that Hsync and/or Vsync are either too fast or too slow. When such a message appears, check the frequencies shown in the *Status* menu. If they are correct, then the signal is not recognized by the projector. On some PCs you may be able to change the settings to generate a compatible signal. If the frequencies shown in the *Status* menu are incorrect, check the cabling to see where the problem is.

System Warnings / Errors

When the projector encounters a system malfunction, either a System Warning message or a System Error message may appear. Both types of messages are accompanied by a steady red "Power" LED and a flashing red-and-yellow error code on the "Status" LED, and a related message appears on the LCD Status Display window. A system malfunction can be cleared with Exit Exit from presentation level, but may indicate the need for service by a qualified service technician.

NOTE: System messages appear on-screen only if ***Display Error Messages*** *has been set to "Screen" or "All".*

System Warnings

A system *warning* message indicates that a system malfunction has been detected (see *Status LED Codes*, below). A system warning message replaces any input signal

Downloaded from projector.com

message and disappears when the input signal status changes. While the projector will remain operational, the message indicates the presence of a serious problem that should be reported to the manufacturer. You can press EXIT Exit to remove the message, but for best results you should reset the projector—power the projector down and up again with the POWER key.

System Errors

A system *error* message indicates that a serious malfunction has been detected and must be reported to the manufacturer (see *Status LED Codes*, below). The projector will no longer operate and must be reset—power the projector down and up again with the POWER key.

The Status LED Codes

If the "Status" LED on the back of the projector repeatedly flashes a pattern of yellow and red light while the "Power" LED glows a continuous red, you have encountered a likely system error requiring the attention of a qualified service technician (see *System Warnings* and *System Errors*, above). Acknowledge and clear the error with Exit Exit from presentation level, or try resetting the projector by powering it off and on again, cooling when necessary. Consult Table 3.3 and contact your dealer if the problem persists.

The specific pattern of flashing indicates the 2-digit code identifying the type of problem encountered—the number of yellow flashes represents the first digit and the number of red flashes indicates the second digit. For example, a pattern of “yellow-yellow-red-red-red-red-red-red-red-red” is “Code 28”, meaning the lamp is not installed. These codes include:

Downloaded from Projector.com

Table 3.3. System Error Codes

Code	Description
GENERAL	
12	Software bug. Contact dealer/factory.
13	CRC error in flash ROM. Download new software.
14	Replace IPM
15	Attempting to download code without being in boot mode
16	Invalid interrupt. Power off/on. If persists, contact dealer/factory.
LAMP / BALLAST	
21	Unable to turn the lamp on
22	Lamp is overheated
23	n/a
24	n/a
25	Lamp may be on before being turned on
26	Cannot read valid lamp ballast ID
27	Unexpected lamp shut-off
28	Lamp is missing
IMAGE PROCESSOR MODULE	
31	Boot code CRC failed
32	Unable to program the Sync Xilinx part
33	Unable to program a device on Altera programming bus
34	Unable to program a device on JTAG programming bus
35	Unrecognized ROM type
36	Write to flash ROM failed
37	General IPM failure
38	Code being downloaded will not fit in ROMs
OPTICAL/DMD SUBSYSTEM COMMUNICATIONS	
41	Unrecognized BTM or BRM
42	Unable to program a device on BTM or BRM
43	n/a
44	n/a
45	n/a
46	n/a
47	Mixed Formatters
48	Download failure in display engine
POWER & COOLING	
51	n/a
52	n/a
53	Main exhaust fan has failed
54	n/a
55	Low voltage power supply failed to turn on
56	TEC for red DMD has overheated
57	TEC for green DMD has overheated
58	TEC for blue DMD has overheated
MOTOR CONTROL MODULE (not in all projectors)	
61	Problem communicating with the MCM
62	n/a
INTERCONNECT OR CHASSIS I.D.	
71	Unable to access EEPROM on the ICM
72	EEPROM memory has re-initialized
VIDEO DECODER MODULE (INPUT 3 OR 4)	
81	Unable to program the video decoder (VDM)
OPTIONAL INTERFACE MODULE	
91	Unable to program the option card

If you encounter a system error, clear it with [Exit] [Exit]*. If necessary, try resetting the projector by powering it off and on again (cooling if necessary). Contact dealer/factory if error persists.*

Downloaded from Projector.com

Downloaded from Projector.com

Section 4

Maintenance

4.1 Warnings and Guidelines

This projector is CSA approved and is designed for safe and reliable operation. However, safe operation cannot be assured by design alone; installers, maintainers, and users must maintain a safe operating environment for the system. Please read through and understand the following warnings and guidelines promoting safe usage of the projector.

⚠ WARNING ⚠
Never look directly into the projector lens. The extremely high brightness of this projector can cause permanent eye damage.

⚠ WARNING ⚠
For protection from ultraviolet radiation, keep all projector shielding intact during operation.

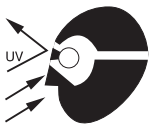

Labels and Markings

Observe and follow all warnings and instructions marked on the projector.

The exclamation point within the equilateral triangle alerts the user to important operating and maintenance (servicing) instructions in the literature accompanying the projector.

The lightning flash and arrowhead symbol within the equilateral triangle alerts the user to non-insulated "dangerous voltage" within the projector's enclosure that may be of sufficient magnitude to constitute a risk of electric shock.

Projector Location

Operate the projector in an environment which meets the operating range specifications in *Section 5, Specifications*. Do not operate the projector close to water, such as near a swimming pool.

Do not place the projector on an unstable cart, stand or table. If the projector is to be ceiling mounted, only use a Christie-approved ceiling mount fixture.

A projector and cart combination should be used with care. Sudden stops, excessive force, and uneven surfaces may cause the projector and cart combination to overturn.

Downloaded from Projector.com

Lamp and Filter Replacement

LAMP: Do not operate the Xenon lamp for more than 1000 hours; risk of the lamp shattering increases as a result of changes in the quartz glass. Also, operation beyond 1000 hours significantly reduces brightness output.

⚠ WARNING ⚠
Even cool lamps can explode. Direct lamp window AWAY from all people and objects at all times.

The arc lamp operates at a very high temperature and pressure. Failure to allow the lamp to sufficiently cool prior to handling could result in an explosion causing personal injury and/or property damage. After turning the projector off it is important that you wait at least five minutes before unplugging it. This provides enough time for the internal lamp cooling fans to cool the lamp and to automatically shut off. Cool completely before handling.

⚠ WARNING ⚠
Use only lamps supplied by the projector manufacturer.

FILTER: Replace the side filter every 1000 hours or sooner. If this filter is not replaced, air flow may become restricted and cause the projector to overheat.

See ***4.4, Replacing the Lamp and Filter*** for the complete replacement procedure.

⚠ WARNING ⚠
Use only filters supplied by the projector manufacturer.

Power Cord and Attachments

Only use attachments or accessories recommended by the manufacuter, such as the integral AC line cord. Use of other attachments or accessories with this projector may result in the risk of fire, shock or personal injury.

⚠ WARNING ⚠
Use only the integral AC power cord supplied. Do not alter or attempt operation if the AC supply and cord are not within the specified voltage and power range.

Do not allow anything to rest on the power cord. Locate the projector where the cord cannot be abused by persons walking on it or objects rolling over it.

Operate the projector at the specified voltage only. Do not overload power outlets and extension cords as this can result in fire or shock hazards.

The projector is equipped with a three wire plug having a third (grounding) pin. This is a safety feature. If you are unable to insert the plug into the outlet, contact an electrician to have the outlet replaced. Never defeat the safety purpose of the grounding-type plug.

Ventilation

Before unplugging the power cord, make sure the internal lamp cooling fans have shut off. The fans automatically shut off when the projector has adequately cooled down.

Slots and openings in the projector provide ventilation. To ensure reliable operation of the projector and to prevent overheating, these openings must never be blocked or covered. The projector should never be placed near or over

Downloaded from Projector.com

a radiator or heat register. The projector should not be placed in an enclosure unless proper ventilation is provided. In a stack, do not invert only a single projector.

Never insert objects of any kind into the projector through the ventilation openings. They may touch dangerous voltages or short-out components resulting in a fire or shock hazard. Do not spill liquids into the projector. Should an accidental spill occur, immediately unplug the projector and have it serviced by qualified service personnel.

Servicing ' If any of the following conditions exist, unplug the projector from the power outlet and refer service to qualified service personnel.

- The power cord has been damaged.
- The internal cooling fans do not come on when the projector is first turned on.
- Liquid has been spilled into the projector.
- The projector has been exposed to excessive moisture.
- The projector does not operate normally.
- The projector has been dropped or the case has been damaged.
- Projector performance has deteriorated.

Do not attempt to service the projector yourself. All servicing must be performed by a qualified projector service technician only. If replacement parts are required, it is important that only manufacturer-approved parts are used. Other parts may result in fire, electric shock or risk of personal injury.

4.2 Cleaning

Clean the projector exterior when required. Before cleaning, always unplug the projector from the power outlet.

Lens ' To avoid the risk of scratching the lens, clean the lens *only* if absolutely necessary. A small amount of dust on the lens will have virtually no effect on picture quality. If the lens must be cleaned, use a DRY soft cotton cloth. Clean gently in a circular motion.

Lamp ' Never touch the glass surface of the lamp, as the oil imprint will seriously degrade lamp performance. Should you accidentally touch the surface of the lamp, clean carefully with a lint-free cloth moistened with isopropyl alcohol.

Case ' Clean the case with a soft dampened cloth. Use a mild commercial cleaner. Do not use liquid or aerosol cleaners.

4.3 Replacing Keypad Batteries

The IR remote keypad uses four AA size, 1.5V batteries (preferably alkaline). To install new batteries, open the battery compartment at the back side of the keypad by pulling on the raised portion of the cover as shown (Figure 4.1).

Remove the old batteries and safely discard. Wait a minute or two and place the new batteries in the compartment, orienting the positive/negative of each battery according to the labels in the compartment. When batteries are in place, replace the cover by inserting its bottom edge first and snapping the top into place. Do not force.

NOTE: Always wait a minute or two when replacing batteries so that the internal electronics discharge and can recognize the change.

Download from projector.com

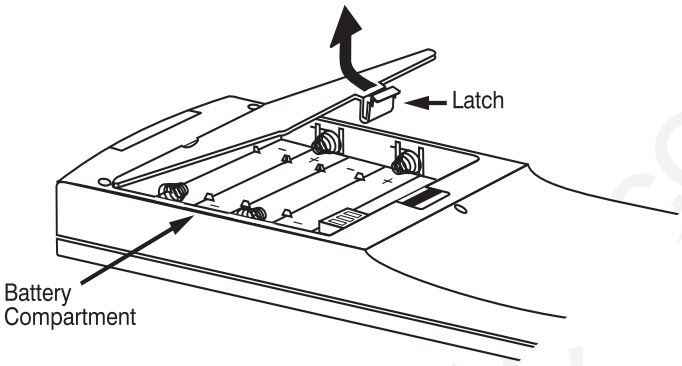

Figure 4.1. Replacing Keypad Batteries

4.4 Replacing the Lamp and Filter

NOTE: For this procedure you will need a "Roadie S12/X10/X8 Lamp and Filter Replacement Kit" manufactured after May 2000.

The high brightness of your projector is provided by a 1.9 kilowatt Xenon lamp permanently mounted inside its own protective housing. When the bulb approaches 1000 hours of usage, this lamp module needs to be replaced.

How Old is The Lamp?

The number of hours logged on the current lamp appears both in the *Lamp* submenu (accessed through the *Advanced* menu) and the *Status* menu. In the *Status* menu, do not confuse "Lamp Hours" with "Lamp Counter", which indicates the number of hours logged during the current rental period only and is normally used just for rental projectors.

*NOTE: As the lamp nears its limit (as set in **Lamp Limit**), a message can appear on screen to warn that the lamp needs to be replaced. To make sure that this warning appears, enter a checkmark in the **Lamp Message** checkbox located in the **Lamp** submenu.*

Lamp Replacement Procedure

You will need a Phillips screwdriver for this procedure.

⚠ WARNING ⚠
Lamp replacement is to be done by a qualified service technician only.

⚠ WARNING ⚠
Never remove a hot lamp. The bulb is under great pressure and risk of explosion increases with temperature, causing personal injury and/or property damage. Allow to cool completely and handle by the housing only.

⚠ WARNING ⚠
Even cool lamps can explode. Direct lamp window AWAY from all people and objects at all times.

⚠ WARNING ⚠
Use only lamps supplied by the projector manufacturer.

Downloaded from Projectorscom

STEP 1 ' Turn off the projector

Turn the projector off and allow the cooling fans to stop automatically before proceeding with Step 2.

STEP 2 ' Unplug the projector

When the cooling fans have stopped, unplug the projector. *Allow additional time for the lamp to cool completely. Never handle a hot lamp, and use caution at all times.*

STEP 3 ' Unlatch & open lamp door

The lamp module is secured in place behind a lamp door located on the left side of the projector about half way back (see Figure 4.2 and Figure 4.3).

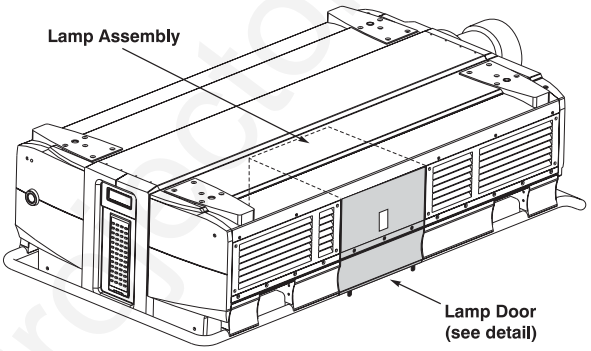

Figure 4.2. Lamp Location

- Unlatch the center latch by pulling up and loosening ¼ turn.
- Slide the 2 bottom spring fasteners firmly towards the center. Then pull the fasteners towards you to lock in place. *NOTE: Pull firmly—the springs are stiff.*
- Pull the door down, then off—the internal lamp bracket and lamp module will be exposed.

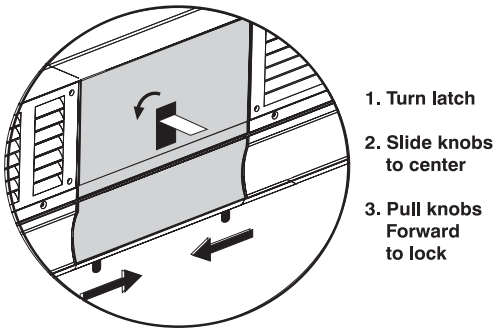

Figure 4.3. Open Lamp Door

STEP 4 ' Remove lamp bracket

Loosen both bracket knobs. Pull the bracket straight up, lifting one end up until it is free from its slot in the lamp cavity, and remove. See Figure 4.4.

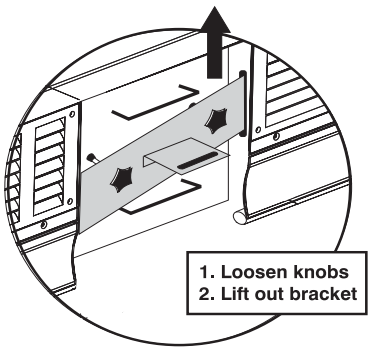

Figure 4.4. Remove lamp bracket

Downloaded from Projector.com

STEP 5 ' Pull out old lamp module

Grasp the top and bottom handles of the lamp module and pull the module straight out of the projector (Figure 4.5). Pull firmly while keeping the assembly level.

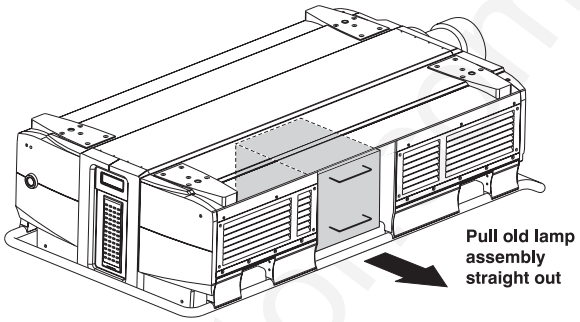

Figure 4.5. Pull out old lamp module

STEP 6 ' Return old lamp module

All lamps returned to the manufacturer must be packed safely and securely in an adequate shipping carton, such as the box and packing materials provided with the new lamp. Label the carton clearly with an RMA number and return to the manufacturer as described in the instructions provided with the new lamp.

NOTE: Your voluntary participation in this re-lamping program is strongly encouraged, and helps ensure availability of economical replacement lamps carrying a full warranty. Once you have returned a used lamp, you are entitled to the purchase of a re-lamped lamp module. Consult the Lamp Warranty Program document for further re-lamping details.

STEP 7 ' Insert new lamp module

- **CLEAN THE LAMP AREA AND CHECK NEARBY COMPONENTS:** With the lamp module removed, carefully check for and remove any debris in the lamp compartment and adjacent duct. Make sure the cold mirror is intact, and that the adjacent blower is clean and turns freely.

⚠ WARNING ⚠
Clear the projector interior of any debris.

- See Figure 4.6. Align the lamp module to the lamp compartment with the lamp window facing the projector, handles near top and bottom. Carefully slide the module straight into the projector. When it feels as though it is in place, push very firmly once more to ensure that the unit is properly seated *as far back* as possible.

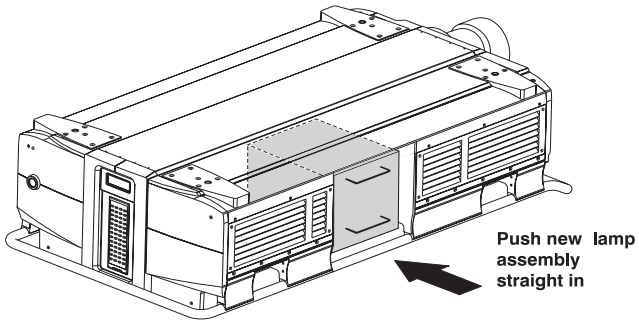

Figure 4.6. Install new lamp module

⚠ WARNING ⚠
Do not face, touch or bump the lamp window.

Downloaded from Projector.com

STEP 8 ' Install lamp bracket

Set the lamp bracket into the slots on the side of the lamp compartment, making sure both ends seat securely at the bottom of the slots. Hand tighten the 2 knobs firmly so that the lamp is secured as far back into the projector as possible. See right.

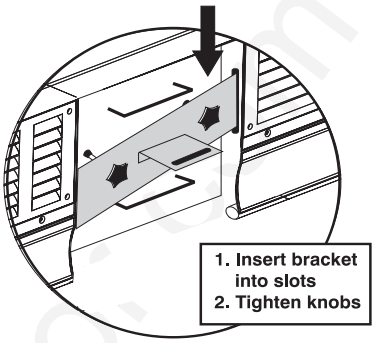

Figure 4.7. Install bracket

STEP 9 ' Align the lamp

⚠ **IMPORTANT:** Align as per the instructions supplied with the new lamp kit. **ALIGNMENT IS MANDATORY** for this projector, and must be done whenever the lamp module is replaced or moved. Make sure the bracket is in place when aligning.

STEP 10 ' Replace the lamp door

Insert the top edge of the lamp door under the projector top lid. Then release the bottom latches by pushing back and then sliding the fasteners firmly away from each other to lock into the projector handle. Secure top latch. See right.

NOTE: If the door doesn't appear to fit properly, the lamp module is likely not quite in all the way—push the module in a little farther and re-align.

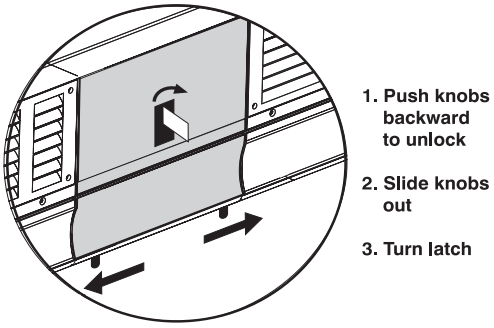

Figure 4.8. Replace lamp door

STEP 11 ' Power up the projector and reset the lamp timer

In the *Advanced* menu, select the "Lamp" option. In the *Lamp* submenu, select the "Change Lamp" option–enter the new serial number in the S/N text box (see *Section 3, Operation* if you need help entering the number). When the new number is recorded, the lamp timer will automatically reset to "0" hours and begin to log time.

IMPORTANT

If you neglect to enter a serial number, the lamp timer will not reset to "0" and will therefore be inaccurate. The lamp life limit may then expire prematurely.

NOTES: ***1)*** *Once entered, the new lamp serial number is also automatically added to the "Lamp History" submenu (read-only).* ***2)*** *Lamp life data is required for warranty claims.*

Downloaded from Projector.com

Filter Replacement Procedure

It is a good idea to replace the 2 side filters whenever the lamp module is replaced (or more frequently if operating the projector in a dusty environment). These filters lie along the right side panel of the projector, running from the front edge to about 9 inches from the rear.

STEP 1 ***Turn off the projector, cool, and unplug.***

Before removing or installing a filter, turn off the projector and allow to cool for five minutes before unplugging.

⚠ WARNING ⚠
Unplug the projector.

STEP 2 ***Remove the filter grille***

Remove the 6 screws securing the filter grille to the projector (Figure 4.9).

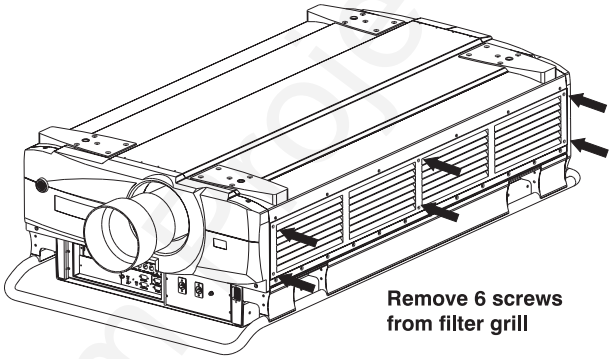

Figure 4.9. Remove filter grille

Pull out the old filters and replace with the new, wire side in. Align the first filter to the front edge of the projector and follow with the second so that the last 9 inches (approx.) are not covered by filter. See Figure 4.10. Replace the grille and secure with the 6 screws.

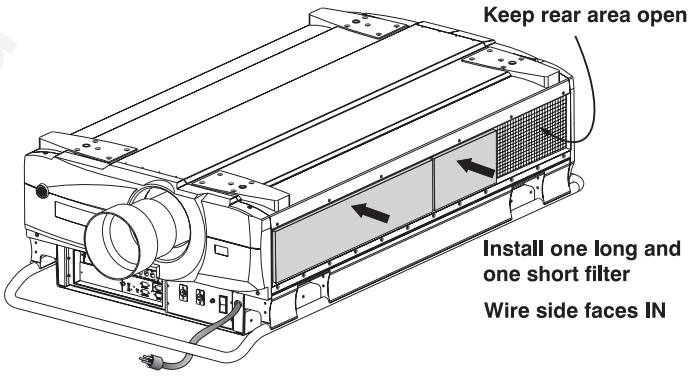

Figure 4.10. Install long and short filters

⚠ WARNING ⚠
Use only Christie filters. Never operate the projector without the filters installed.

Downloaded from Projector.com

4.5 Replacing the Lens

A variety of lenses are available to accommodate different throw distances and specific types of installations. See page 5-1 for details. To change or install a lens, follow the steps below.

STEP 1 ' *Turn off the projector, cool, and unplug.*

Before removing or installing a lens, turn off the projector and allow to cool for five minutes before unplugging. Make sure that the lens cap is on.

⚠ WARNING ⚠

Unplug the projector. Install the lens cap.

STEP 2 ' *Remove the lens*

Make sure the projector is unplugged. Grasp the lens assembly near the point where it enters the projector and slowly unscrew (turn counter-clockwise) until the assembly is free from the projector. Use both hands and take care not to touch the lens surface, which is easily damaged. Set aside.

NOTE: To remove a motorized zoom lens, loosen the 3 thumbscrews securing the zoom adapter collar around the perimeter of the lens (see Figure 4.13). Then unscrew the lens ***and*** *pull out the adapter collar.*

STEP 3 ' *Install the new lens and adjust*

FIXED (NON-ZOOM) - Make sure the new lens is protected by the lens cap. ***Turn off the projector.*** Install the new lens in the projector by *carefully* screwing the assembly into the projector just until snug. If the lens assembly seems difficult to turn, it may be cross-threaded. Carefully remove and try again. Use both hands and do not force or over-tighten.

MOTORIZED ZOOM - Make sure the zoom lens is protected by a lens cap. Then:

a) **TURN OFF AND UNPLUG THE PROJECTOR**.

b) **INSERT THE NEW ZOOM ADAPTER COLLAR** (available separately) into the empty lens area of the projector, aligning the collar pin to the slot in the projector (Figure 4.11). Fully *loosen* all 3 collar thumbscrews. *NOTE: The adapter collar enables remote (motorized) zoom in the projector. For manual zoom adjustment, do not install this collar.*

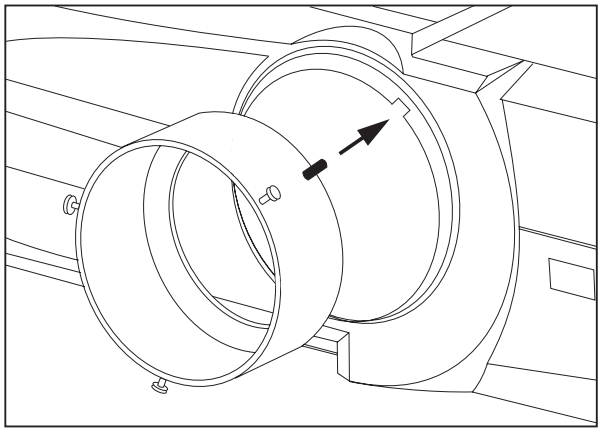

Figure 4.11. Align adapter collar pin to slot in projector

c) Screw the lens into the projector as described above for non-zoom lenses. It should not come into contract with the adapter collar at this point.

Downloaded from Projector.com

d) **ADJUST THE ZOOM RING:** Face the front of the projector. On the lens, *manually* turn its textured zoom ring counter-clockwise as far as possible. Then reverse direction by approximately ½ inch. See right.

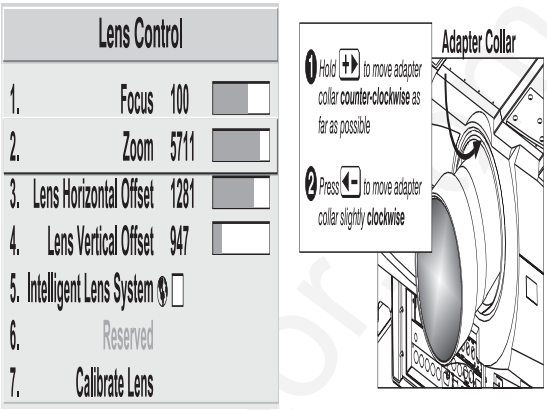

e) Remove the lens cap. Plug in the projector and power up.

f) **ADJUST THE ADAPTER COLLAR:** Press [Lens] to display the *Lens Control* menu. Then adjust as follows (see Figure 4.12):

- Adjust "Zoom" to its maximum, watching the adapter as you hold the [+▶] key down. The adapter collar will turn counter-clockwise as far as possible and then automatically back off (reverse a slight distance) when it has reached its maximum.
- Briefly *decrease* "Zoom" to continue this back-off by another ¼ inch. Watch the collar movement carefully as you press [◀−]. You may want to mark reference points first.

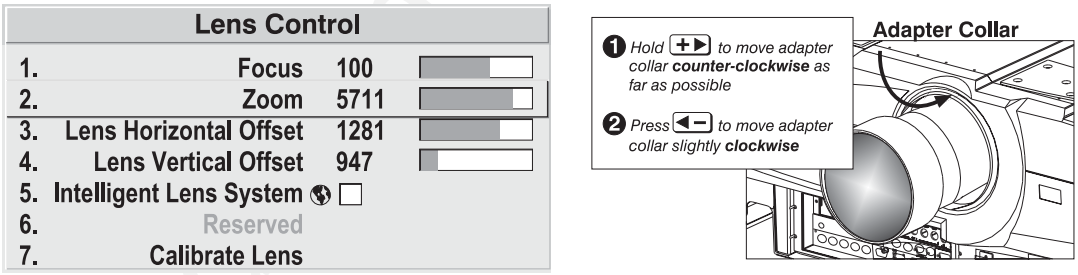

Figure 4.12. Adjust adapter collar using "Zoom" control

IMPORTANT

Make sure to turn both the *lens zoom ring* and *adapter collar* as described.

g) Gradually tighten the 3 thumbscrews equally, taking care to keep the adapter collar and lens centered with one another (Figure 4.13). The adapter collar should be securely attached to the lens when you are done, enabling the lens to move with [Lens] adjustments.

Downloaded from Projector

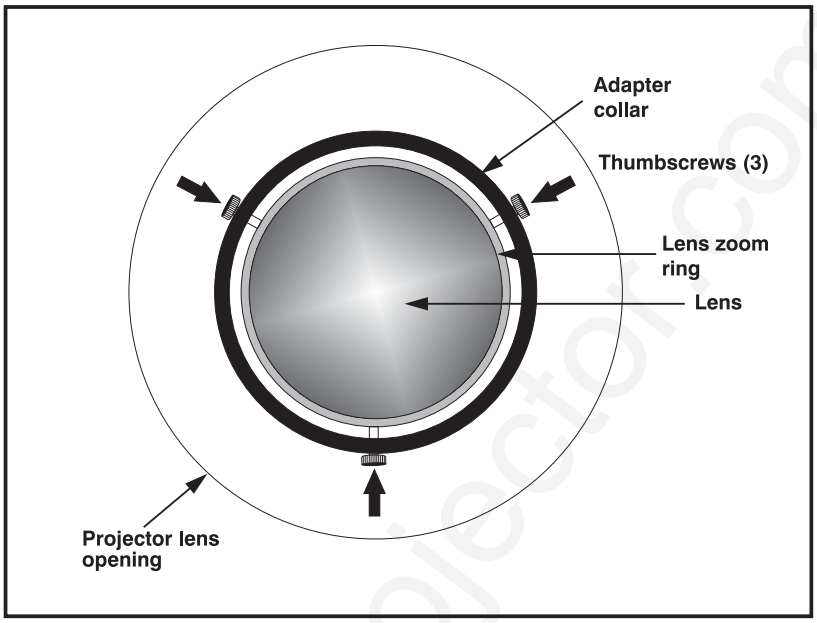

Figure 4.13. Tighten 3 thumbscrews equally

STEP 4 ' Reposition the projector

Remove the lens cap and reposition the projector closer to or further from the screen as necessary for the screen and new lens type. For example, if using a **0.8:1** lens (which is **0.6:1** as SXGA), throw distance should be roughly equal to **0.8** (or **0.6**, as SXGA) **x** the **screen width**. For accuracy in a permanent installation, always use the appropriate throw distance from *Appendix E*. Power up and test, adjusting offsets as necessary.

NOTE: If you install one of the larger lenses you may need to adjust the lens mount tilt UP slightly to compensate for increased gravitational pull on these heavier lenses. On the front bezel of the projector, remove the very small cap located near the top of the lens (at approximately 11 o'clock). Insert a 9/64" Allen key until it seats on the internal hex screw—you may have to move the horizontal offset for access. Turn the screw slightly to adjust the lens tilt UP as necessary.

4.6 Troubleshooting

If the projector appears not to be operating properly, note the symptoms present and use the following guide to assist you. If you cannot resolve the problems yourself, contact your dealer for assistance.

NOTE: Always check the LCD status window at the rear of the projector for initial information about a problem.

Symptom ' The projector will not turn on when [Power*] is pressed…

CAUSE / REMEDY:

1. Make sure to hold [Power*] for approximately one second. Or press [Power*] quickly and release, and follow with [▲ON].
2. Do both LEDs come on at the front of the projector? Check that the power cord is properly connected at the wall outlet (200-240 VAC, 50-60 Hz nominal) and that you are using the integral cable provided with the projector.
3. Does the green "Status" LED flash with each key press? If not, the projector is not receiving the keypad's IR signals. Ensure the keypad is directed at either the

Downloaded from Projector.com

front or rear of the projector, or at the screen. Also make sure that these paths are not blocked. Try the built-in keypad.

4. The batteries in the IR remote keypad may be weak. Refer to *4.3, Replacing Keypad Batteries* for instructions.
5. The IR keypad may have been disabled by a change in protocol. See *2.10, Keypad Protocols and Conversion* and *3.7, Configuring System Parameters*.
6. Use the [Power*] key on the built-in keypad to turn the projector on.

Symptom ' The projector is on but I can't see display of source input...

CAUSE / REMEDY:

1. Was the lens cover accidentally left on? Remove lens cover.
2. Is the shutter closed? Is the projector in standby? Press [Exit] to clear.
3. Is an active source connected properly? Check the cable connections. And is the correct source selected? Press [Input1], [Input2], [Input3], or [Input4] to select. See *2.4, Source Connections* and *3.5, Working with Inputs and Channels* for details.
4. Are there test patterns or menus present? If so, check your source connections again.
5. The room lighting may be too bright. Lower the intensity of the room lighting. Reduce light reflections as much as possible.
6. Increase contrast and/or brightness of image.
7. The projector may be too far from the screen. Move the projector closer.
8. Is the "Status" LED flashing a pattern of yellow and red light while the "Power" LED is steady red? This indicates an internal system error that may prevent the projector from operating. If the problem persists contact a qualified service technician.

Symptom ' The projector does not respond to the infrared remote keypad...

CAUSE / REMEDY:

1. Does the built-in keypad work? If so, check that remote keypads are enabled.
2. Does the green "Status" LED flash each time a key is pressed? If not, the projector is not receiving the keypad's IR signals. Ensure the keypad is directed to either the front or rear of the projector, or towards the screen.
3. The viewing path between the IR keypad and the projector (or screen) may be blocked. Ensure there is a clear line-of-sight between the keypad and the projector (or screen).
4. The batteries in the IR remote keypad may be weak. Refer to *4.3, Replacing Keypad Batteries* for instructions on how to replace the batteries.
5. There may be unusual lighting conditions in the room affecting IR keypad operation. Determine if such conditions exist and correct.
6. The IR keypad may have been disabled for use with this projector(s). Press [PROJ] [PROJ] to enable broadcasting to all projectors. See *2.10, Keypad Protocols and Conversion* and *3.7, Configuring System Parameters* for additional information.

Symptom ' The power is on but the lamp is not…

CAUSE / REMEDY:

1. Does the LCD status window say "warming up"?

Downloaded from Projector.com

2. The projector probably became overheated (there is likely an error code flashing and a message in the LCD status window). Allow to cool and make sure that nothing blocks projector vents. Do not operate in environments warmer than 35°C (95°F).
3. The lamp may have reached the end of its life. Check the “Lamp Hours” via the RS-232 request **lph?**.

Symptom ' The display is jittery or unstable…

CAUSE / REMEDY:

1. If the display is jittery or if it disappears and reappears erratically, check that the source is properly connected and that its signal is of adequate quality for detection. For example, it the projector scans the default input Input1 for a signal to display, and a poor quality or improperly connected source is connected, the projector will briefly and repeatedly attempt to display an image. If no source is connected, the "No signal present" error message appears over a blank display. Correct the source connection.
2. The horizontal or vertical scan frequency of the input signal may be out of range of the projector. Refer to *Section 5, Specifications* for scan frequency ranges.
3. The sync signal may be inadequate. Correct the source problem.
4. The input signal type may conflict with the input module. Install/use the correct module for the source.
5. Pixel tracking, phase, filter, etc. may need more adjustment.

Symptom ' The display is faint…

CAUSE / REMEDY:

1. Check *Input Levels* option–turn *Auto input Level* “on”, wait for 6 values of blacklevels and drives to stabilize, then turn *Auto input Level* to “off”.
2. Brightness and/or contrast may be set too low. Adjust as necessary.
3. Gamma may be incorrect. Recommended setting for most signals is *Normal*.
4. The projection room may be too bright. Lower the intensity of projection room lighting and reduce light reflections as much as possible.
5. The projector may be too far from the screen. Move the projector closer.
6. The location of the audience with respect to the screen may not be ideal. Make sure the audience is within the viewing angle set by the projector and screen position, and the screen type.
7. The source may be double terminated. Ensure the source is terminated only once.
8. The source (if non-video) may need sync tip clamping. Enter a check in the *Sync Tip Clamping* box found in the *Input Levels* submenu.

Symptom ' The display is reversed and/or upside-down…

CAUSE / REMEDY:

1. The projector's image orientation is not set correctly for the current projector installation and position. Refer to *2.6, Operating Orientation* to set the image orientation to match your installation.

Symptom ' The upper portion of the display is waving, tearing or jittering…

CAUSE / REMEDY:

1. This can sometimes occur with video or VCR sources. If you are using a VCR, make sure that the "VCR" option is checked (in *Advanced Image Settings* menu).

Symptom ' Portions of the display are cropped or wrap to the opposite edge…

CAUSE / REMEDY:

1. Reduce top, bottom, left or right blanking from within the *Size and Position* menu. Check size and position adjustments.

Downloaded from Projector.com

2. Resizing may need adjustment. Adjust until entire image is visible and centered.

Symptom ' ***The display appears compressed or stretched…***

CAUSE / REMEDY:

1. The frequency of the pixel sampling clock is incorrect for the current source.
2. The *Size and Position* options may be adjusted poorly for the incoming source signal. See *3.6, Adjusting the Image.*

Symptom ' ***Display quality appears to drift from good to bad, bad to good…***

CAUSE / REMEDY:

1. The operating temperature of the projector may be fluctuating. Watch that the projector is not located too close to heating/air conditioning vents.
2. The source input signal may be of low quality.
3. The horizontal or vertical frequency of the input may have changed at the source end.

Symptom ' ***The display has suddenly frozen, or an unknown menu has appeared…***

CAUSE / REMEDY:

1. You may have accidentally entered a special engineering code using the Func key in combination with certain numbers , or you may have selected the "Freeze Image" option. Press Exit as necessary to cancel the function and return to presentation level.
2. If the screen blacks out inexplicably, it is possible that excessive voltage noise on the AC or ground input has interrupted the projector's ability to lock on to a signal. Turn the projector off, wait for the lamp fans to stop, and unplug. Plug in again and power up as usual.

Symptom ' ***The display is not sharp or "clean"…***

CAUSE / REMEDY:

1. More display adjustment may be required–check focus, brightness, contrast, pixel tracking, pixel phase, and detail.
2. If you are using a BNC T-connector, try using a distribution amplifier to boost signal levels.
3. Is the video input signal properly terminated? Set in *Video Options* submenu.
4. The screen size may be too large. As screen size increases, magnification increases, reducing brightness and clarity. See lens specifications in *Section 5*.
5. The source input signal may be of low quality. Try another source.

Symptom ' ***Colors in the display are inaccurate…***

CAUSE / REMEDY:

1. Color, tint, gamma, color space and/or color temperature settings may require adjustment. Review all settings, and refer to *3.6, Adjusting the Image*.

Symptom ' ***The display is not rectangular…***

CAUSE / REMEDY:

1. Check leveling of the projector. If necessary, try relocating the projector or screen so that the lens surface and screen are approximately parallel.
2. Is the vertical offset set correctly ? Adjust as necessary (press Lens).
3. The "Keystone" (*X10* only) and/or "Vertical Stretch" options may need adjustment. Also check pixel tracking.

Symptom ' ***The display is "noisy"…***

CAUSE / REMEDY:

1. Display adjustment may be required. Adjust pixel tracking, phase and filter. Noise is particularly common on YPbPr signals from a DVD player.

Downloaded from Projector.com

2. If video, make sure the video input is terminated (75 S). If it is the last connection in a loop-through chain, the video input should be terminated at the *last* projector only.
3. The input signal may be of poor quality.
4. The signal cables carrying the input signal may be of poor quality. Use only good quality signal cables.
5. The distance between the input source device and the projector may be too great. If the distance between the input source device and the projector is greater than 25 feet, signal amplification/conditioning may be required.
6. If the source is a VCR or off-air broadcast, detail may be set too high. Keep near 4 for most sources.

Downloaded from Projector.com

Downloaded from Projector.com

Section 5

Specifications

5.1 Specifications

ROADIE S12
ROADIE X10

*NOTES: **1)** Due to continuing research, specifications are subject to change without notice. **2)** Specifications apply to both models unless otherwise noted.*

Display

Panel Resolution and Refresh Rate

S12 pixel format (H x V) on 3 DMD panels	1280 x 1024 (SXGA)
X10 pixel format (H x V) on 3 DMD panels	1024 x 768 (XGA)
Refresh rate, *S12/X10*	23.97 – 85 Hz

Achievable Brightness

S12 = 12,000 ANSI lumens *X10* = 10,000 ANSI lumens

Achievable Contrast Ratio

> 250:1 ANSI, > 400:1 full on / full off

Colors and Gray Scale

Displayable colors	16.8 million
Gray scale resolution	8 bits

Color Temperature

Default	6500K
Range of Adjustment	3200K to 9300K

Lenses

Lens Type / Throw Ratio	Diag. Screen Size	Max. % of Image Offset from Lens Center							
		X10				S12			
0.8:1 *(0.6:1 as SXGA)*	5-25'	⇧98%	⇩103%	⇦ 70%	70% ⇨	⇧80%	⇩60%	⇦ 61%	60% ⇨
1.5 - 2.5:1 *(1.2 - 1.9:1 as SXGA)*	6-40'	⇧104%	⇩89%	⇦ 88%	79% ⇨	⇧70%	⇩89%	⇦ 69%	70% ⇨
2.5 – 4:1 *(2.0 - 3.2:1 as SXGA)*	6-40'	⇧90%	⇩90%	⇦ 74%	76% ⇨	⇧72%	⇩81%	⇦ 63%	64% ⇨
4-7:1 *(3.1 - 5.6:1 as SXGA)*	10-40'	⇧101%	⇩101%	⇦ 83%	75% ⇨	⇧82%	⇩82%	⇦ 64%	63% ⇨
7-15:1 *(5.6 - 12:1 as SXGA)*	10-50'	⇧104%	⇩112%	⇦ 87%	90% ⇨	⇧70%	⇩89%	⇦ 80%	74% ⇨
1:1 *(VistaPro 1.2:1)*	6-30'	⇧75%	⇩75%	⇦ 65%	64% ⇨	n/a			
2.3:1 *(VistaPro 3:1)*	6-30'	⇧93%	⇩107%	⇦ 79%	79% ⇨	n/a			
3.9:1 *(VistaPro 5:1)*	9.6-36'	⇧95%	⇩91%	⇦ 77%	72% ⇨	n/a			
5.5:1 *(VistaPro 7:1*	9.6-36'	⇧100%	⇩115%	⇦ 83%	83% ⇨	n/a			
1.2 – 2.3:1 *(VistaPro 1.5 – 3:1)*	9.6-36'	⇧86%	⇩86%	⇦ 75%	75% ⇨	n/a			
2.3 – 5.5:1 *(VistaPro 3 – 7:1)*	9.6-36'	⇧98%	⇩94%	⇦ 83%	73% ⇨	n/a			

*NOTES: **1)** Offsets are reduced when simultaneously offsetting horizontally and vertically. **2)** Manufacturing tolerances between the same lenses and/or projectors may cause >5% variation in offset ranges. **3)** The 0.8:1 lens (0.6:1 as SXGA) is the same lens as the VistaGRAPHX 0.8:1 lens. **4)** VistaPro lenses are compatible with X10 only.*

Inputs

Number of inputs	2 RGBHV (second input via plug-in module) 2 Video

Downloaded from Projector.com

Analog RGB and YPbPr (INTERLACED OR PROGRESSIVE SCAN FORMAT)

Horizontal frequency range	15 – 120 kHz *
Vertical frequency range **	23.97 –120 Hz
Pixel clock rate	10 – 160 MHz
Signal format	Analog RGB or YPbPr
Active pixels per scan line (H)	640 – 2048
Active lines per frame/field (V)	200 – 2000
Input levels	
R,B,G,Y — with sync	$1.0V_{p-p}$ ±2 dB ($0.79V_{p-p}$ – $1.26V_{p-p}$)
R,G,B — without sync	$0.7V_{p-p}$ ±2 dB ($0.56V_{p-p}$ – $0.88V_{p-p}$)
Pb,Pr	$0.7V_{p-p}$ ±2 dB ($0.56V_{p-p}$ – $0.88V_{p-p}$)
DC offset	± 5V
Nominal impedance	75 ohms
Maximum return loss (VSWR)	1.2:1 dB @ 200 MHz

* *Input frequencies higher than the maximum panel refresh rate are displayed at a lower rate.*

Analog Video

Signal formats	Composite (CVBS), S-Video (Y/C)
Video standards	NTSC, NTSC 4.43, PAL, PAL-M, PAL-N, PAL-60 & SECAM
Input level, Composite	1.0 V_{p-p} ± 3db (including sync tip)
Input level, S-Video, Luma (Y)	1.0 V_{p-p} ± 3db (including sync tip)
Input level, S-Video, Chroma (C)	630 mV_{p-p} nominal (burst)
DC offset	± 5V
Nominal impedance	75 ohms
Maximum return loss (VSWR)	1.2:1 dB @ 6 MHz

Sync (INTERLACED OR PROGRESSIVE SCAN FORMAT)

Input levels *(for composite or separate H & V)*	$0.5V_{p-p}$ – $5.0V_{p-p}$
Impedance *(for composite or separate H & V)*	75 ohms
Sync type *(for composite or separate H & V)*	• Separate H and V • Bi-level or tri-level sync-on-green • Bi-level or tri-level composite
Polarity *(for composite or separate H & V)*	Positive or negative
Maximum return loss (VSWR)	1.2:1 dB @ 200 MHz

RS-232 Serial Input

Number of connectors	3 (1 network in, 1 network out, 1 for switcher control)
Connector type	9 pin D

RS-422 Serial Input

Number of connectors	2
Connector type	6-pin XLR

Wired Control Input

Optional wired keypad	3-pin XLR connector
Input level	High 2.0V min., Low 0.7V max.

Downloaded from Projecto.com

Power Requirements

Voltage range (auto switching)	200 to 240 VAC continuous
Line frequency	50 – 60 Hz nominal
Max. inrush current	60 amps
Max. current rating	14 amps @ 200V
Max. power consumption	2800 watts
Line cord rating	20 amp (use 20A or 30A plug)
Line cord wiring:	
black or brown	Live
white or blue	Neutral
green or green/yellow stripe	Ground

Lamp

Type	1.9 kW Xenon short arc, open
Adjustment range	1.4 - 1.9 kW
Operating angle	any vertical angle, ±15° horizontal
Warm up period to full brightness	5 minutes
Rated life	1000 hours to half intensity

IR Control

Typical range	100’, line-of-sight
IR carrier frequency (subcarrier modulated)	336 kHz
Battery type (4 required)	AA 1.5 V (Alkaline cells)
Battery life	1 yr. Shelf, 1 mo. continuous use

Size & Weight

Size (product only, W x L x H — incl. handles but not lens)	29” (73.7 cm) x 54” (137.2 cm) x 16” (40.6 cm)
Size of shipping box (W x L x H)	40” (101.6 cm) x 63” (160 cm) x 32” (81.3 cm)
Weight of product, no lens	220 lb. (100 kg)
Shipping weight	310 lb. (149 kg)

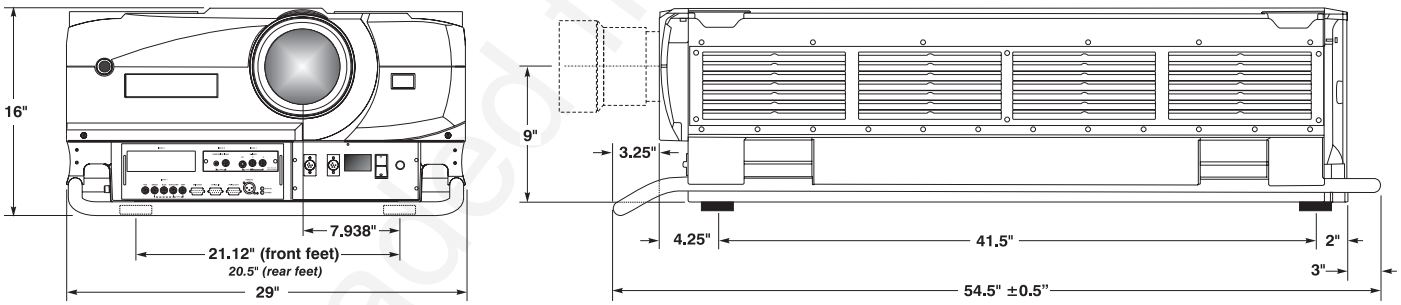

Figure 5.1. Projector Dimensions

Safety

Approved **to CSA C22.2. No.950 (M94),** to **UL 1950** and **EN60950**

EMC Emissions

- **FCC Part 15 Class A** Conducted and Radiated Emissions
- **CISPR 22 Class A** Conducted and Radiated Emissions

EMC Immunity

- **EN55024** (all parts)

Operating Environment

Temperature	5°C to 35°C (41°F to 95°F)
Humidity (non-condensing)	20% to 80%
Altitude	0 – 3000 meters

Downloaded from Projector.com

Non-operating Environment

Temperature	-25°C to 55°C (-22°F to 120°F)
Humidity (non-condensing)	0% to 95%

Standard Components

IR (infrared) Remote Keypad — includes batteries
User's Manual
Warranty Registration Card
4 Eyebolts for hoisting: ½"-13 x 1½"

Options

Accessories

Wired Remote Keypad
2-Way Controller
IR Remote Sensor
Alternate Throw Lenses *(see page 5-1)*
Marquee Signal Switcher
Roadie Hoisting/Stacking Kit
Universal Ceiling Mount
CoRE Librarian for downloading new software

Input Modules ("Interfaces")

RGB500 Input Module
RGB400 Active Loop-Through Input Module
RGB400 Buffered Amplifier Input Module
Composite/S-Video Input Module
PC250 Analog Input Module
Serial Digital Input Module
Digital HDTV Module
DVI Input Module

Downloaded from Projector.com

Appendix A

Glossary

This appendix defines the specific terms used in this manual as they apply to this projector. Also included are other general terms commonly used in the projection industry.

Active Line Time ' The time, inside one horizontal scan line, during which video is generated.

Ambient Light Rejection ' The ability of a screen to reflect ambient light in a direction away from the "line of best viewing". Curved screens usually have good ambient light rejection. Flat screens usually have less ambient light rejection.

Analog Video ' The video output of most computers and video tape machines. Analog video can generate a large number of colors.

Aspect Ratio ' The ratio of the width of an image to its height, such as the 4:3 aspect ratio common in video output.

Auto Source ' The ability of the projector to automatically recognize and synchronize to the horizontal and vertical scan frequencies of an input signal for proper display.

Bandwidth ' The frequency range of the projector's video amplifier.

Baud Rate ' The speed at which serial communications travel from their origin. In this projector, the RS-232 or RS-422 default baud rate of 19200 can be changed to match a controlling device. The switcher baud rate of 9600 cannot be changed.

Blanking Time ' The time inside one scan line during which video is not generated. The blanking time of the input signal must be equal to or greater than the retrace time of the projector.

Brightness ' In projection, brightness usually describes the amount of light emitted from a surface such as a screen. It is measured in foot-lamberts or candelas per square meter.

Candela or Candle ' Unit of measure for measuring intensity of light.

Channel ' A collection of measurements stored by the projector for a given input source, including frequencies, pulse width, polarity, syncs, channel number and location, user-adjustable display settings, etc. Use channels to switch between a variety of setups quickly, automatically recalling previously defined display parameters.

Channel List ' A list/menu of previously-defined channels available in projector memory.

Channel Number ' A number that uniquely identifies a specific channel retained in projector memory. The projector can retain up to 99 channels.

Downloaded from Projector.com

Checkbox ' A menu item that indicates whether an option is currently in effect (checked) or not (unchecked).

Color Shift ' A change in the tint of a white field across an image.

Color Temperature ' The coloration (reddish, white, bluish, greenish, etc.) of white in an image, measured using the Kelvin (degrees K) temperature scale. Higher temperatures output more light.

Component Video ' See *YCbCr* or *YPbPr*.

Composite Video ' The output of video tape players and some computers, characterized by synchronization, luminance and color signals combined on one output cable.

Contrast (ratio) ' The degree of difference between the lightest and darkest areas of the image.

Convergence ' The alignment of the red, green, and blue elements of a projected image.

Curved Screen ' A projection screen which is slightly concave for improved screen gain. Curved screens usually have screen gains which are greater than 1 but viewing angles much less than 180°. Curved screens are not recommended for use with this projector.

DDI ' A Direct Digital Interface signal can be supplied to the projector via an optional digital input module installed in **INPUT 2**. For example, you can input an SMPTE-259M signal using a *Serial Digital Input Module* or input an SMPTE-272M signal from a *Digital HDTV Module*).

DMD™ ' Digital Micromirror Devices™ used in this projector for processing red, green, and blue color data.

Decoder ' Located at **INPUT 3** and **INPUT 4**, this device converts NTSC 3.58, NTSC 4.4, PAL, PAL-N, PAL-M, or SECAM to RGB video.

Detail ' The sharpness of a display from a video source.

Diffused Screen ' A type of rear-projection screen which spreads the light striking it. Screen gain is less than 1 but audience viewing angles are increased.

Display Setting ' An adjustment that affects the display of an image. Such display settings include contrast, brightness, tint, blanking, size, offsets, and others.

Flicker ' A very rapid variation in image brightness caused by a frame rate that is too slow. (See *Interlace*.)

Frame Rate ' The frequency at which complete images are generated. For non-interlaced signals, the frame rate is identical to the vertical frequency. For interlaced signals, the frame rate (also known as field rate) is one half of vertical frequency.

Foot-candle ' The intensity of visible light per square foot.

Foot-lambert ' The luminance (brightness) which results from one foot-candle of illumination falling on a perfectly diffuse surface.

Gain or Screen Gain ' The ability of a screen to direct incident light to an audience. A flat matte white wall has a gain of approximately 1. Screens with gain less than 1 attenuate incident light;

Downloaded from Projector.com

screens with gain more than 1 direct more incident light to the audience but have a narrow viewing angle. For example: An image reflecting off a 10 gain screen appears 10 times brighter than it would if reflected off a matte white wall. Curved screens usually have larger gain than flat screens.

Help Screen ' A display of help information regarding the current task or presentation.

Horizontal Frequency ' The frequency at which scan lines are generated, which varies amongst sources. Also called horizontal scan rate or line rate.

Horizontal Offset ' For this projector, horizontal offset is expressed as the maximum percentage of the image that can be projected to one side of the lens center without degrading the image quality. Horizontal offset ranges can be affected by the type of lens in use, and is limited when the image is offset vertically at the same time.

Hot Spot ' A circular area of a screen where the image appears brighter than elsewhere on the screen. A hot spot appears along the line of sight and "moves" with the line of sight. High gain screens and rear screens designed for slide or movie projection usually have a hot spot.

ILS® ' The *VistaGRAPHX Intelligent Lens System®* describes the ability of Christie projectors to automatically return to lens settings previously defined for a particular channel. The *Roadie* has this capability, but it was not originally known as ILS®.

Input ' A physical connection route for a source signal, described by a 2-digit number representing 1) its switcher/projector location and 2) its slot in the switcher/projector.

Input Signal ' Signal sent from a source device to the projector.

Interface ' A device, such as the *Serial Digital Input Module*, that accepts an input signal for display by the projector.

Interlace ' A method used by video tape players and some computers to double the vertical resolution without increasing the horizontal line rate. If the resulting frame/field rate is too low, the image may flicker depending on the image content.

Keypad ' A small push-button device for controlling most projector settings and operation. For more information, refer to *3.3, Using the Keypad*.

Keystone ' A distortion of the image which occurs when the top and bottom borders of the image are unequal in length. Side borders both slant in or out, producing a “keyhole” shaped image. It is caused when the screen and lens surface are not parallel, or by poor Keystone adjustment in *X10* software (optimized for *X10* only).

Linearity ' The reproduction of the horizontal and vertical size of characters and/or shapes over the entire screen.

Line of Best Viewing ' When light from a projector is incident on a screen, the light reflects from the screen such that the angle of reflection equals the angle of incidence. The Line of Best Viewing is along the line of reflection.

Loopthrough (Loopthru) ' The method of feeding a series of high impedance inputs from a single video source with a coaxial transmission line in such a manner that the line is terminated with its characteristic impedance at the last input on the line.

Downloaded from Projector.com

Lumen ' The unit of measure for the amount of visible light emitted by a light source.

Lux ' The amount of visible light per square meter incident on a surface.
1 lux = 1 lumen/square meter = 0.093 foot-candles

Menu ' A list of selectable options displayed on the screen.

NTSC Video ' A video output format of some video tape and disk players. There are two types of NTSC (National Television Standards Committee) video: NTSC 3.58 and NTSC 4.43. NTSC 3.58 is used primarily in North America and Japan. NTSC 4.43 is less commonly used.

Optical Screen ' A type of rear-projection screen which re-directs light through the screen to increase image brightness in front of the screen. Screen gain is usually greater than 1 but audience viewing angles are reduced.

PAL Video ' PAL (Phase Alternating Line) video is a 50 Hz standard with 768 x 576 resolution. It is found on some video tape and disk players (used primarily in Europe, China and some South American and African countries).

Pincushion ' A distortion of the image shape characterized by concave or convex borders.

Pixel (picture element) ' The smallest discernible element of data from a computer-generated image.

Pixel Phase ' The phase of the pixel sampling clock relative to incoming data.

Pixel Tracking ' The frequency of the pixel sampling clock, indicated by the number of pixels per line.

Presentation Level ' The projector is at presentation level when an image from a source is displayed without the presence of a slidebar, menu, pull-down list, or error message.

Projector-to-Screen Distance ' The distance between the projector's front feet centers and the screen. Also called "Throw Distance”.

Protocol ' The type of code format called “A” or “B” utilized by the remote keypad(s). The default protocol set at manufacture is Protocol “A”. By using two different keypad protocols, adjacent projectors can be controlled independently with their remote IR keypads.

Pull-down List ' A selectable menu item that unfolds into a list of options pertaining to it.

Rear Screen ' A translucent panel for screen projection. Incident light travels through the incident surface of a rear screen and forms an image on the other surface.

Resizing ' The ability to manipulate through software commands the physical size, placement and/or aspect ratio of an image.

Resolution (lens) ' The maximum number of alternate white and black horizontal lines that can be distinguished on a screen when a photographic target is placed between the lens and a light source and illuminated by that source.

Resolution (projector) ' The maximum number of pixels that the projector can display horizontally and vertically across an image, such as 1024 x 768 (called XGA).

Downloaded from Projector.com

Retrace Time (Horizontal) ' The minimum time required for a CRT projector to move the position of the scanning spot from the right edge to the left edge.

Rise Time ' The time required by the video amplifier of the projector to increase its output from 10% to 90% of the maximum value.

RGB Video ' The video output (analog or digital) of most computers. Analog RGB video can have 3, 4, or 5 wires — one each for red, green, and blue, and either none, one or two for sync. For three-wire RGB, the green wire usually provides sync. (See TTL Video).

RS-232 ' A common asynchronous data transmission standard recommended by the Electronics Industries Association (EIA). Also called serial communication.

RS-422 ' A less common asynchronous data transmission standard in which balanced differential voltage is specified. RS-422 is especially suited to long distances.

S-Video ' The output from certain video tape players and video equipment. S-Video separates sync and luminance from color information, typically producing a higher quality display than composite video.

Scan Frequency ' The horizontal or vertical frequency at which images are generated.

Scan Line ' One horizontal line on the display.

SECAM ' A video output format of some video tape and disk players (used primarily in France). SECAM (Sequential Couleur á Mémoire) signals are similar in resolution and frequency to PAL signals. The primary difference between the two standards is in the way color information is encoded.

Slidebar ' A slidebar is a graphical display of an adjustable setting. The numerical setting often represents a percentage but can be a specific unit such as degrees Kelvin.

Source ' The device, such as a computer or VCR, connected to the projector for display. A source is identified at the projector as Input1, Input2, Input3 or Input4, or as other user-defined numbers. A source may have numerous corresponding channels defined and recognized by the projector. See *Input*.

Source Setup ' See *Channel*.

Spot Size ' The diameter of the smallest dot that can be generated by a CRT projector. This projector has a fixed spot (pixel) size.

Switcher ' A signal selector, such as the *Marquee Signal Switcher*, that can be connected to a projector for the purpose of adding more sources.

Sync ' This term refers to the part of the video signal that is used to stabilize the picture. Sync can occur in three forms:

1) "Composite sync": the horizontal and vertical components are together on one cable.
2) "Sync-on-green": the sync is part of the green video.
3) "Separate sync" or "H.SYNC and V.SYNC": the horizontal and vertical components of the sync are on two separate cables.

Downloaded from Projectorscom

Sync Width ' The duration of each sync pulse generated by a computer. The sync width is part of the blanking time.

TTL Video ' A type of RGB video with digital characteristics.

Terminated ' A wire connecting a single video source to a display device, such as a projector, must be terminated by a resistance (usually 75 S for video).

Throw Distance ' The distance between the front feet of the projector and the screen. Also called "Projector-to-Screen Distance". Always use the correct throw distance formula to calculate the proper throw distance (±5%) required for your lens.

Tint ' Balance of red-to-green necessary for realistic representation of NTSC signals.

Variable Scan ' The ability of a projector to synchronize to inputs with frequencies within a specified range.

Vertical Frequency ' The frequency at which images are generated. Vertical frequencies vary amongst sources. Also called vertical scan rate.

Vertical Offset ' For this projector, vertical offset is expressed as the maximum percentage of the image that can be projected above or below the lens center without degrading the image quality. Vertical offset ranges depend on the type of lens in use, and is limited when the image is offset horizontally at the same time.

Video ' The signal that is used by display devices (such as projectors) to generate an image. This term also refers to the output of video tape/disk players and computers.

Video Decoder ' An optional device that converts NTSC 3.58, NTSC 4.4, PAL, PAL-N, PAL-M or SECAM to RGB video.

Video Standard ' A specific type of video signal, such as NTSC, PAL, SECAM. This projector can automatically recognize and interpret the incoming standard and display accordingly.

Viewing Angle ' Screens do not reflect equally in all directions. Most light is reflected in a conical volume centered around the "line of best viewing". Maximum brightness is perceived if you are within the viewing cone defined by the horizontal and vertical viewing angles.

White Balance ' The color temperature of white used by the projector.

White Field ' The area of an image that is white only. For example, a full white field is an image that is white everywhere. A 10% white field is a white area (usually rectangular) that occupies 10% of the image; the remaining 90% is black.

YCbCr ' A high-end *digital* component video signal.

YPbPr ' A high-end *analog* component video signal. Sometimes called YUV, Component, or Y, R-Y, B-Y, the YPbPr signal by-passes the video decoder in this projector.

YUV ' See *YPbPr*.

Zoom ' The adjustment of image size by means of a zoom lens.

Downloaded from Projector.com

Appendix B

Keypad Reference

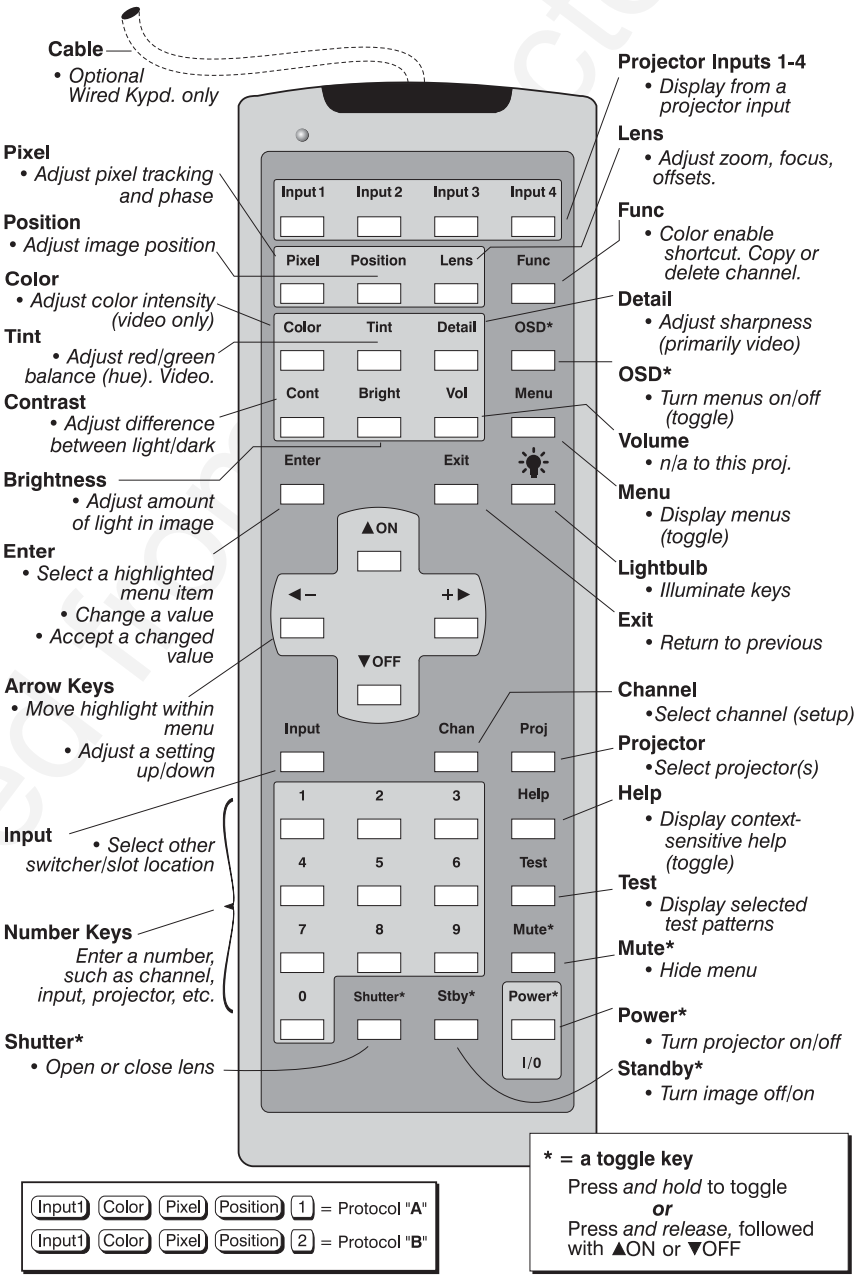

Figure B-1. Keypad

Downloaded from Projector.com

Downloaded from Projector.com

Appendix C

Menu Tree

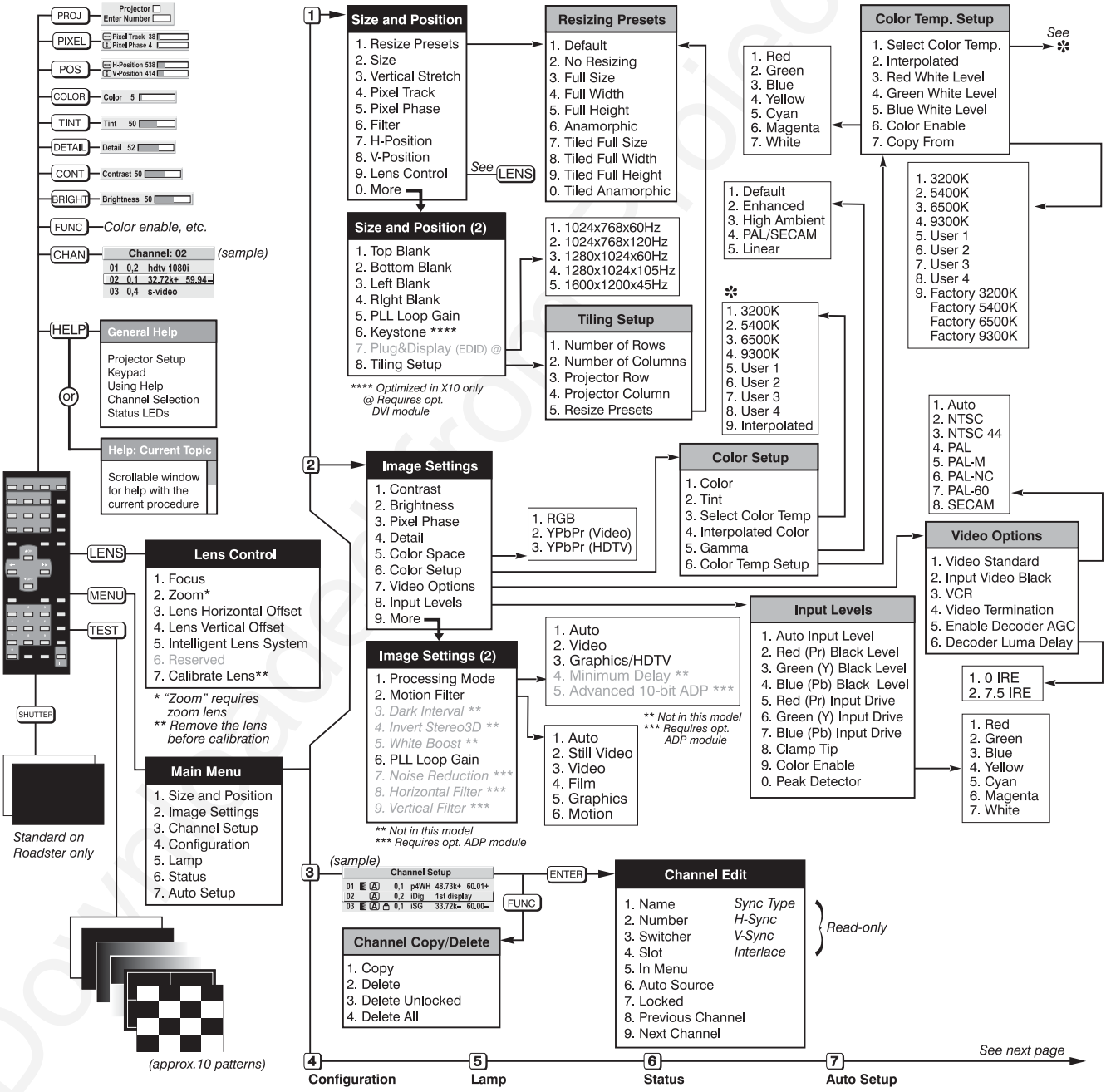

...Continued

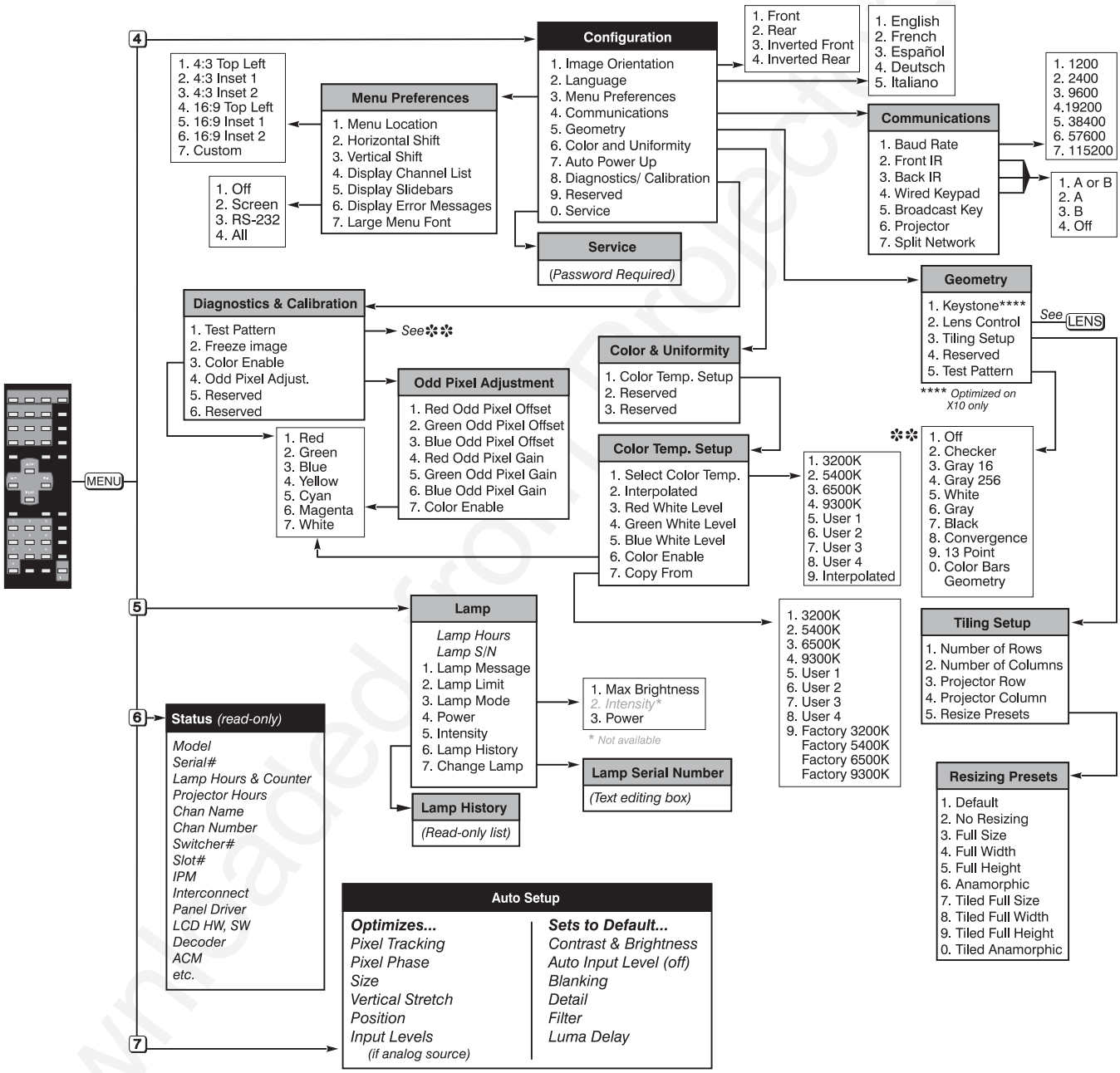

Downloaded from Projector.com

Appendix D

Serial Communication Cables

When connecting a projector to a computer, another projector, or a *Marquee Signal Switcher*, use the appropriate serial communication cabling as illustrated. For all connections, make sure to use high quality *shielded* cabling.

❑ *From projector to computer (RS-232)*

For computers having a 9-pin "AT" type serial port

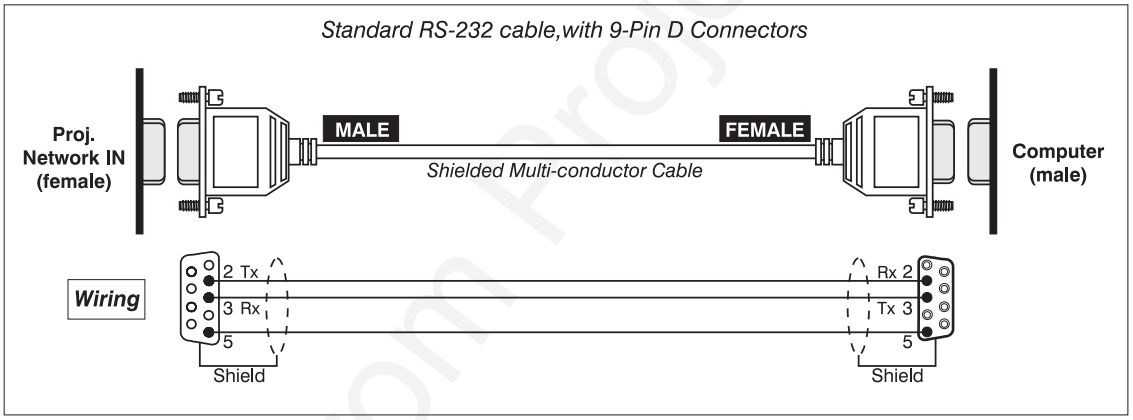

❑ *From projector to computer (RS-232)*

For computers having a 25-pin serial port

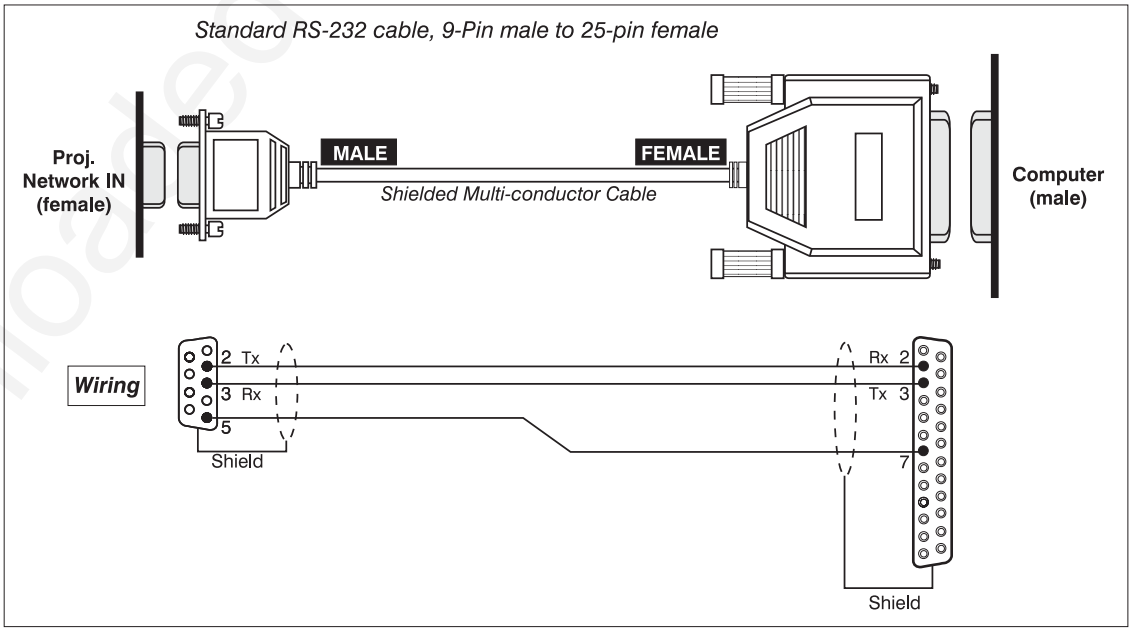

Downloaded from Projector.com

❑ *From projector to RS-422 compatible computer*

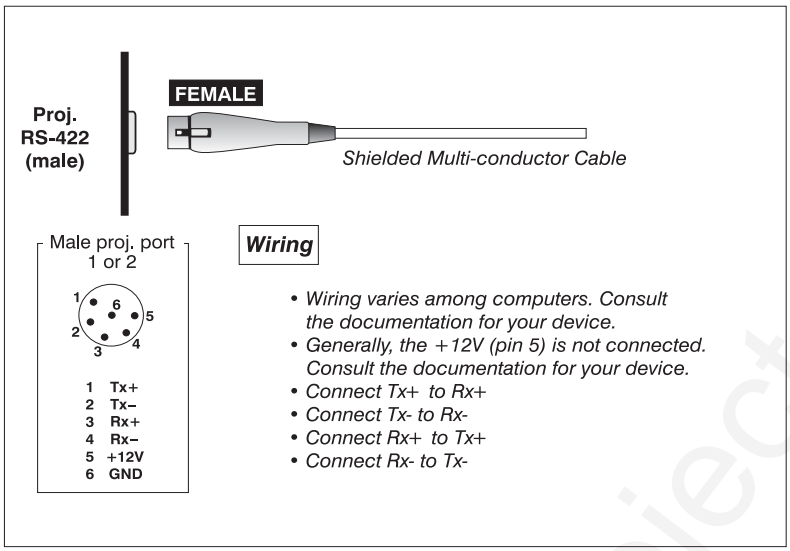

❑ *From projector to projector (RS-232)*

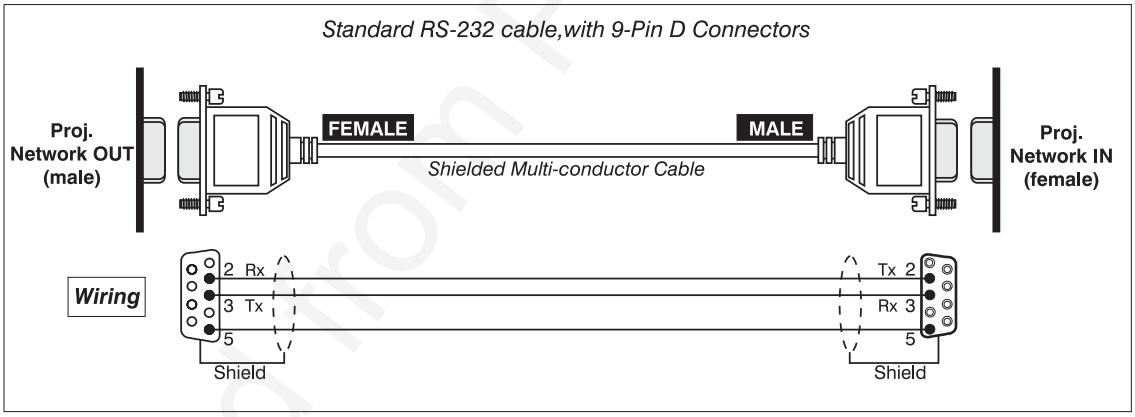

Downloaded from Projector.com

❑ *From projector to projector (RS-422)*

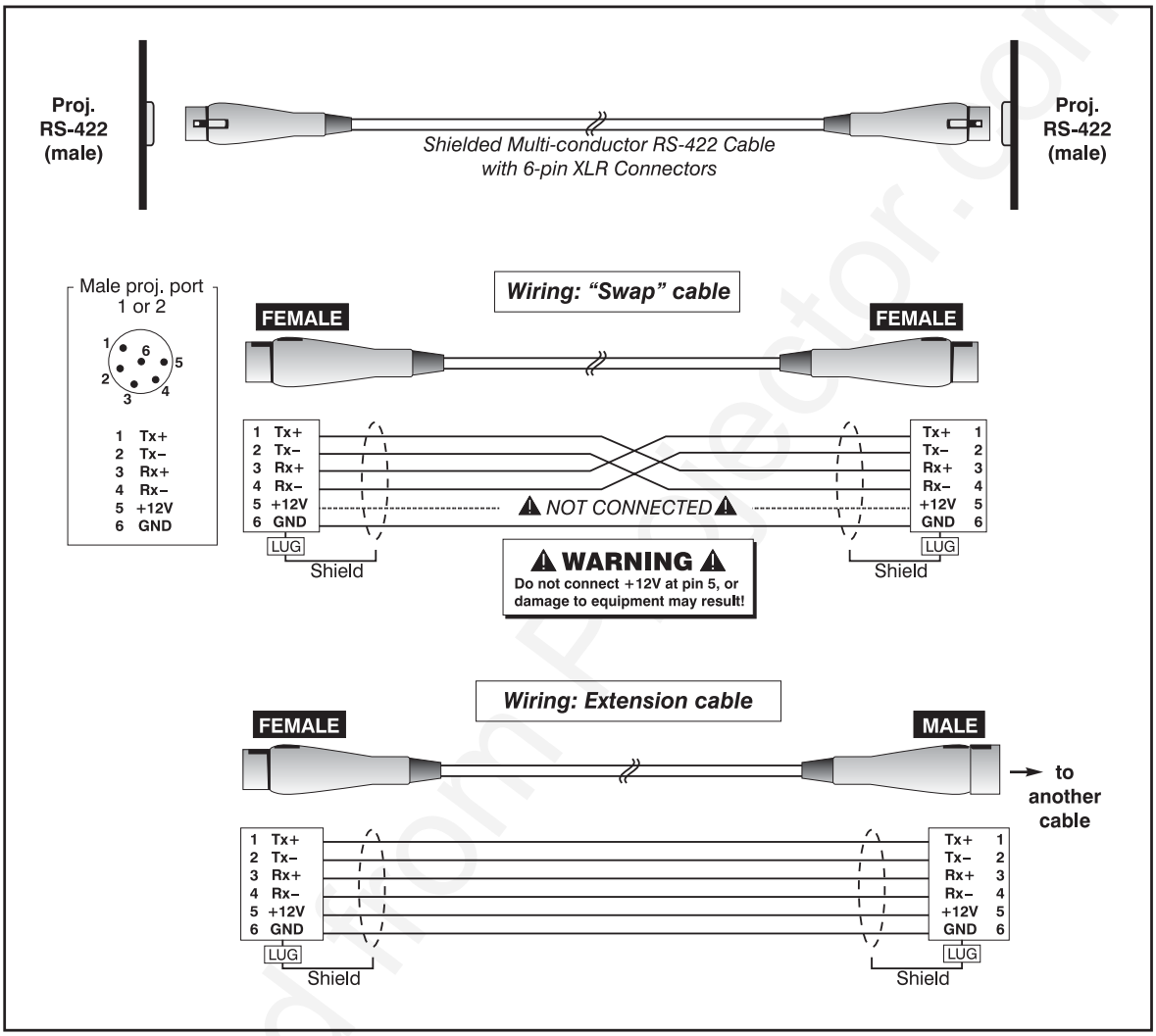

Downloaded from Projector.com

❑ *From projector to switcher, new installation*

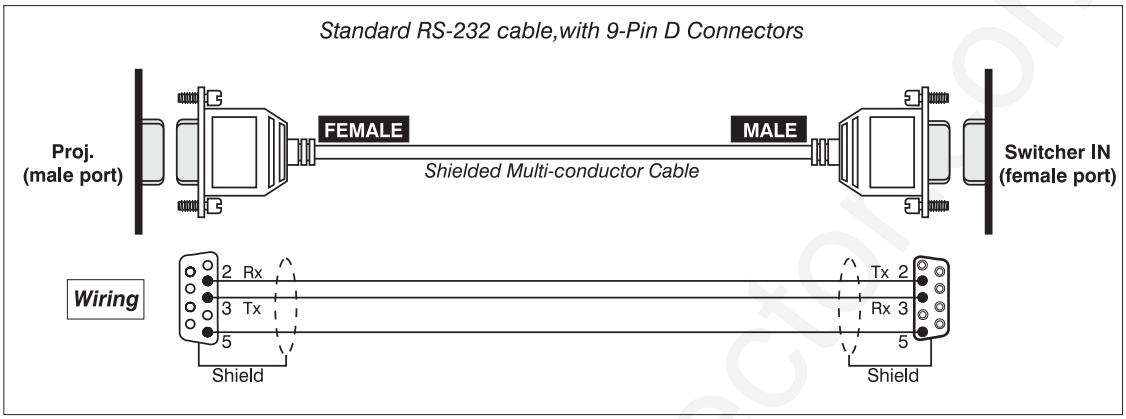

❑ *From projector to switcher, in existing Marquee installation*

For adding a projector to an existing installation in which the switcher OUT port is used (such as with Marquee installations), add a gender-changing adapter at the projector port as shown:

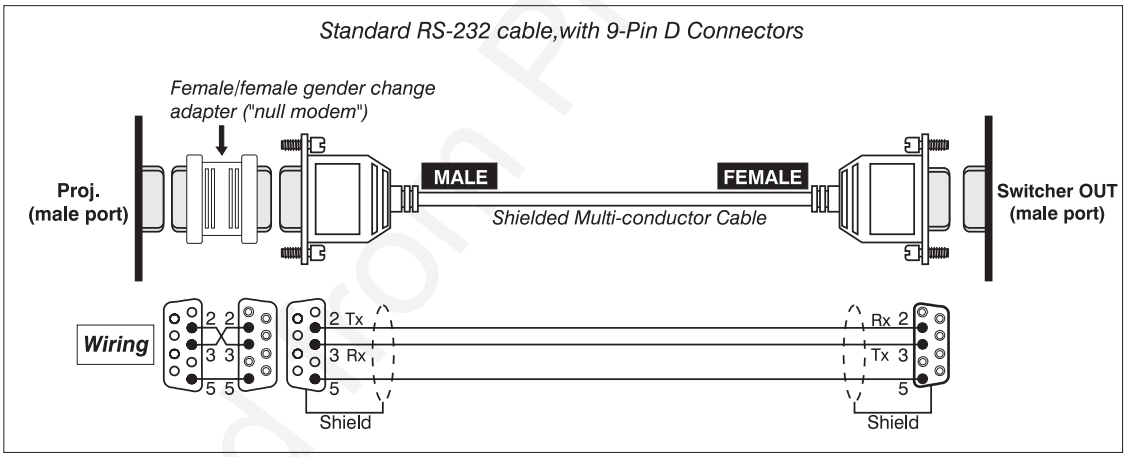

Downloaded from Projector.com

Appendix E

Throw Distance

Calculating Throw Distance

The larger the image needed, the greater the distance required between the lens and screen. Correct throw distance depends on the *screen width* and *lens throw ratio*—once you know what is present, you can use the appropriate formula provided in this appendix to calculate the precise throw distance for your application.

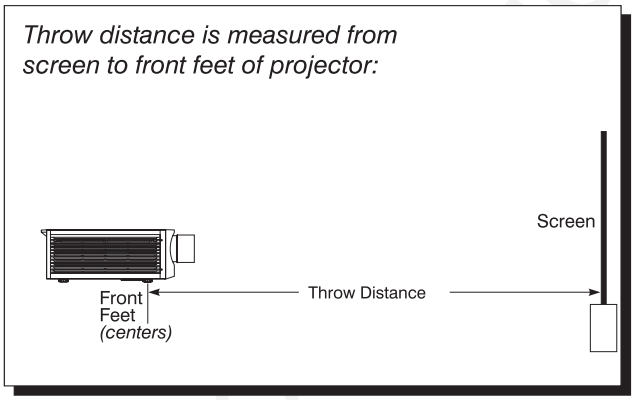

Throw distance is measured between the projector front feet and the screen. This measurement is not necessarily parallel to the floor—i.e., the projector and screen may be inclined.

NOTE: If your projector is tilted in relation to the screen, as is sometimes the case for large venues or elevated installations, throw distance still represents the smallest measurement between the screen and front feet.

Pre-calculated throw distances for the complete range of lens types and screen sizes appear in the charts and graphs on the following pages. Refer to these examples to quickly determine the proper throw distance (±5% or more) for your installation, lens and projector model.

Table E-1. Throw Distance Formulas (ft.)

Lens Throw Ratio	Throw Distance Formula (ft.), ±5% or more	Diagonal Screen Size ↙↗ (ft.)
0.8:1 *(X10)* 0.6:1 *(X12)*	.79 x screen width (↔ ft.) + 0.60 .62 x screen width (↔ ft.) +0 .58	5-25
1.5 - 2.5:1 *(X10)* 1.2 - 1.9:1 *(X12)*	TD range = [1.49 x screen width (↔ ft.)] + 0 .53 to [2.48 x screen width (↔ ft.)] + 0.47 TD range = [1.2 x screen width (↔ ft.)] + 0 .36 to [1.93 x screen width (↔ ft.)] + 0.39	6-40
2.5 - 4:1 *(X10)* 2.0 - 3.2:1 *(X12)*	TD range = [2.51 x screen width (↔ ft.)] + 0.07 to [3.95 x screen width (↔ ft.)] + 0.07 TD range = [1.98 x screen width (↔ ft.)] + 0.35 to [3.18 x screen width (↔ ft.)] + 0.27	6-40
4 - 7:1 *(X10)* 3.1 - 5.6:1 *(X12)*	TD range = [4.1 x screen width (↔ ft.)] + 0.27 to [6.39 x screen width (↔ ft.)] + 0.14 TD range = [3.05 x screen width (↔ ft.)] + 1.02 to [5.57 x screen width (↔ ft.)] – 0.07	10-40
7 - 15:1 *(X10)* 5.6 - 12:1 *(X12)*	TD range = [6.86 x screen width (↔ ft.)] + 1.79 to [14.92 x screen width (↔ ft.)] + 0.62 TD range = [5.79 x screen width (↔ ft.)] – .78 to [11.93 x screen width (↔ ft.)] + 0.59	10-50

NOTE: Make sure to use HORIZONTAL screen width (↔) in all formulas.

0.8:1 Formula (X10)

TD = (0.794 x W') + 0.60

(W' = ↔ *horizontal screen width in feet)*

↔ Screen Width [ft]	Throw Distance [ft]
4	3.77
4.5	4.17
5	4.57
5.5	4.97
6	5.36
6.5	5.76
7	6.16
7.5	6.56
8	6.95
8.5	7.35
9	7.75
9.5	8.14
10	8.54
10.5	8.94
11	9.33
11.5	9.73
12	10.13
12.5	10.53
13	10.92
13.5	11.32
14	11.72
14.5	12.11
15	12.51
15.5	12.91
16	13.30
16.5	13.70
17	14.10
17.5	14.50
18	14.89
18.5	15.29
19	15.69
19.5	16.08
20	16.48
20.5	16.88

0.6:1 Formula (S12)

TD = (0.62 x W') + 0.58

(W' = ↔ *horizontal screen width in feet)*

↔ Screen Width [ft]	Throw Distance [ft]
5	3.67
5.5	3.98
6	4.28
6.5	4.59
7	4.90
7.5	5.21
8	5.52
8.5	5.83
9	6.14
9.5	6.45
10	6.75
10.5	7.06
11	7.37
11.5	7.68
12	7.99
12.5	8.30
13	8.61
13.5	8.91
14	9.22
14.5	9.53
15	9.84
15.5	10.15
16	10.46
16.5	10.77
17	11.08
17.5	11.38
18	11.69
18.5	12.00
19	12.31
19.5	12.62
20	12.93
25	16.01
30	19.10

Downloaded from Projector.com

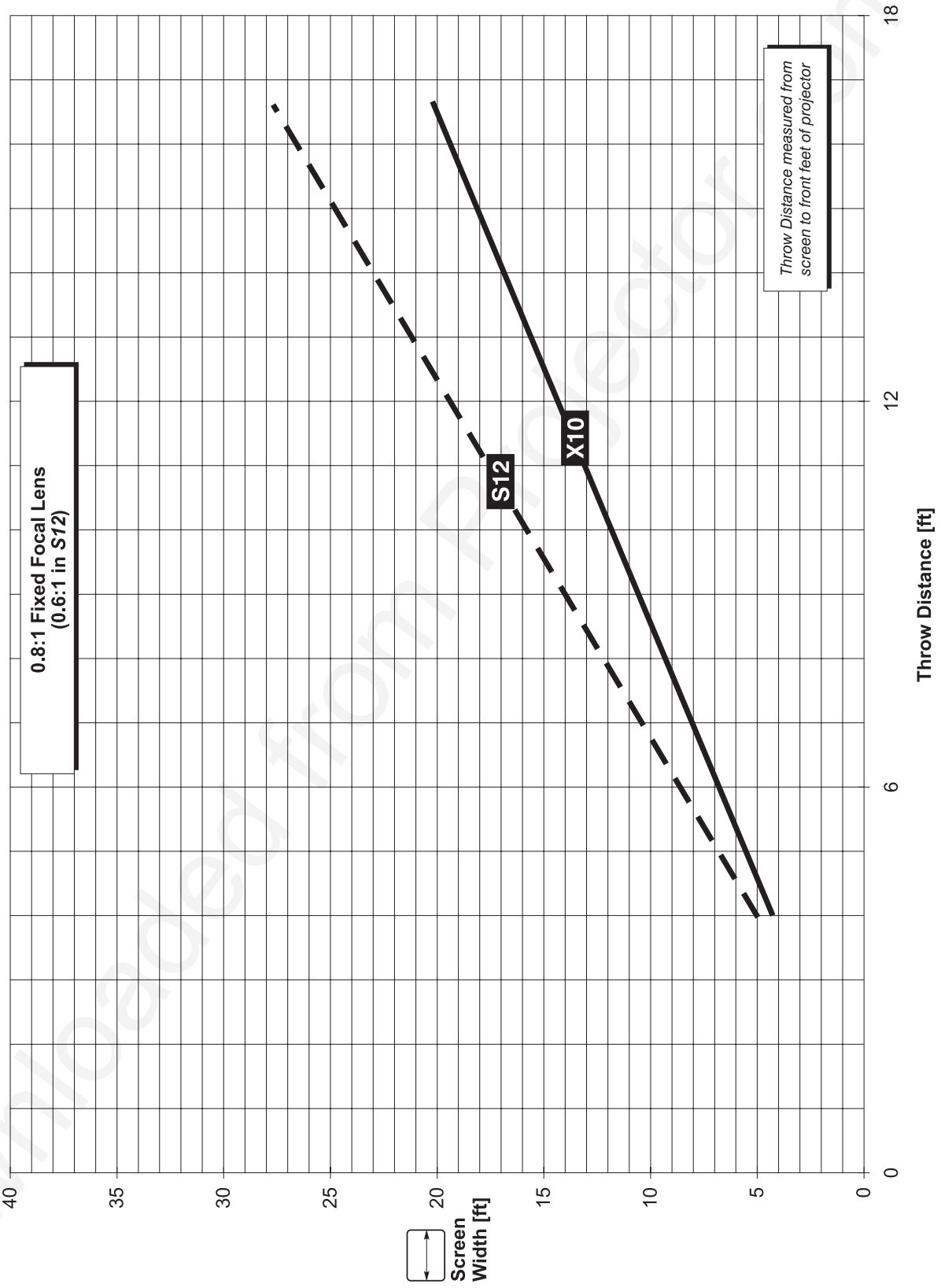

Downloaded from Projector.com

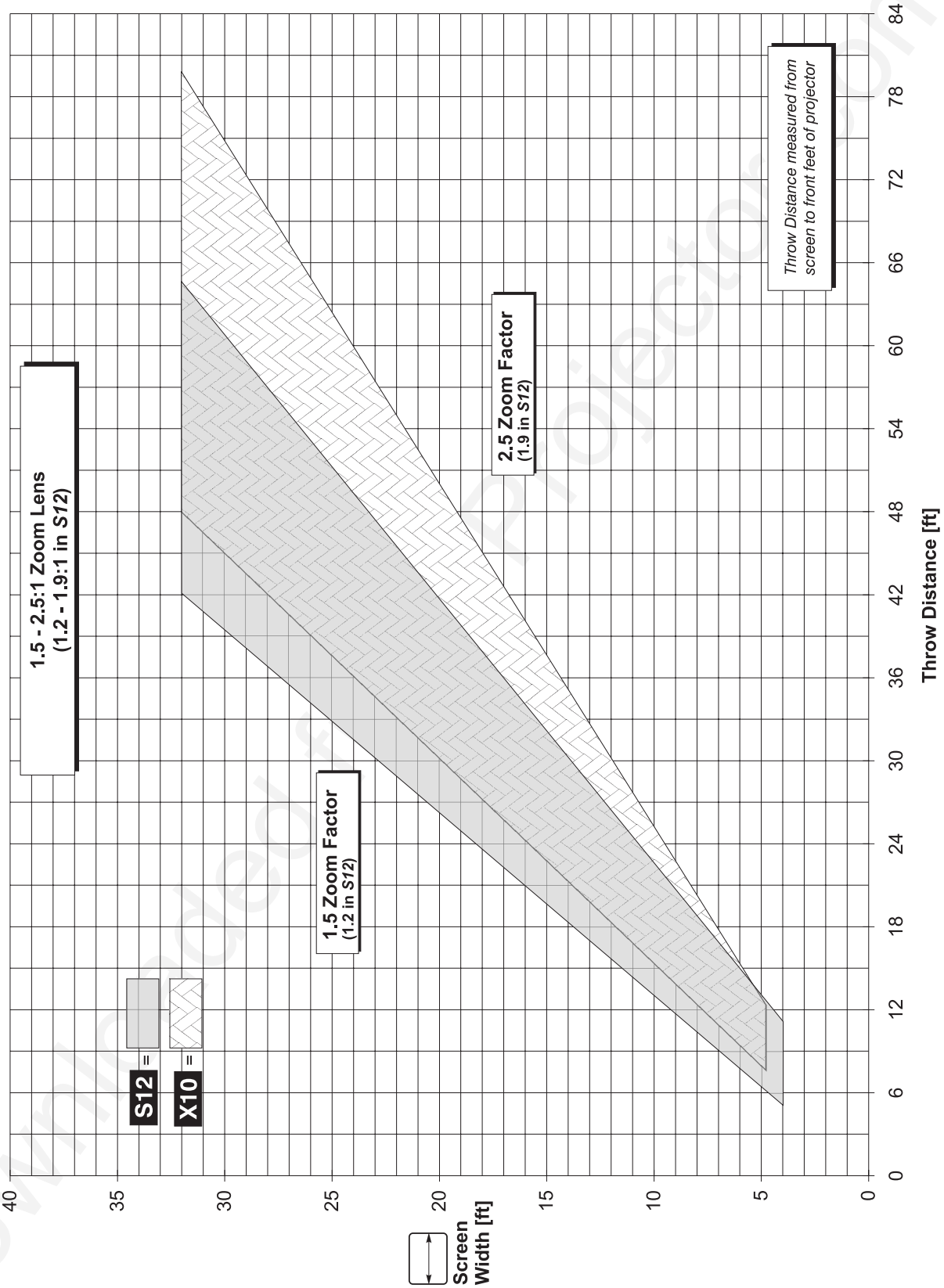

Downloaded from Projector.com

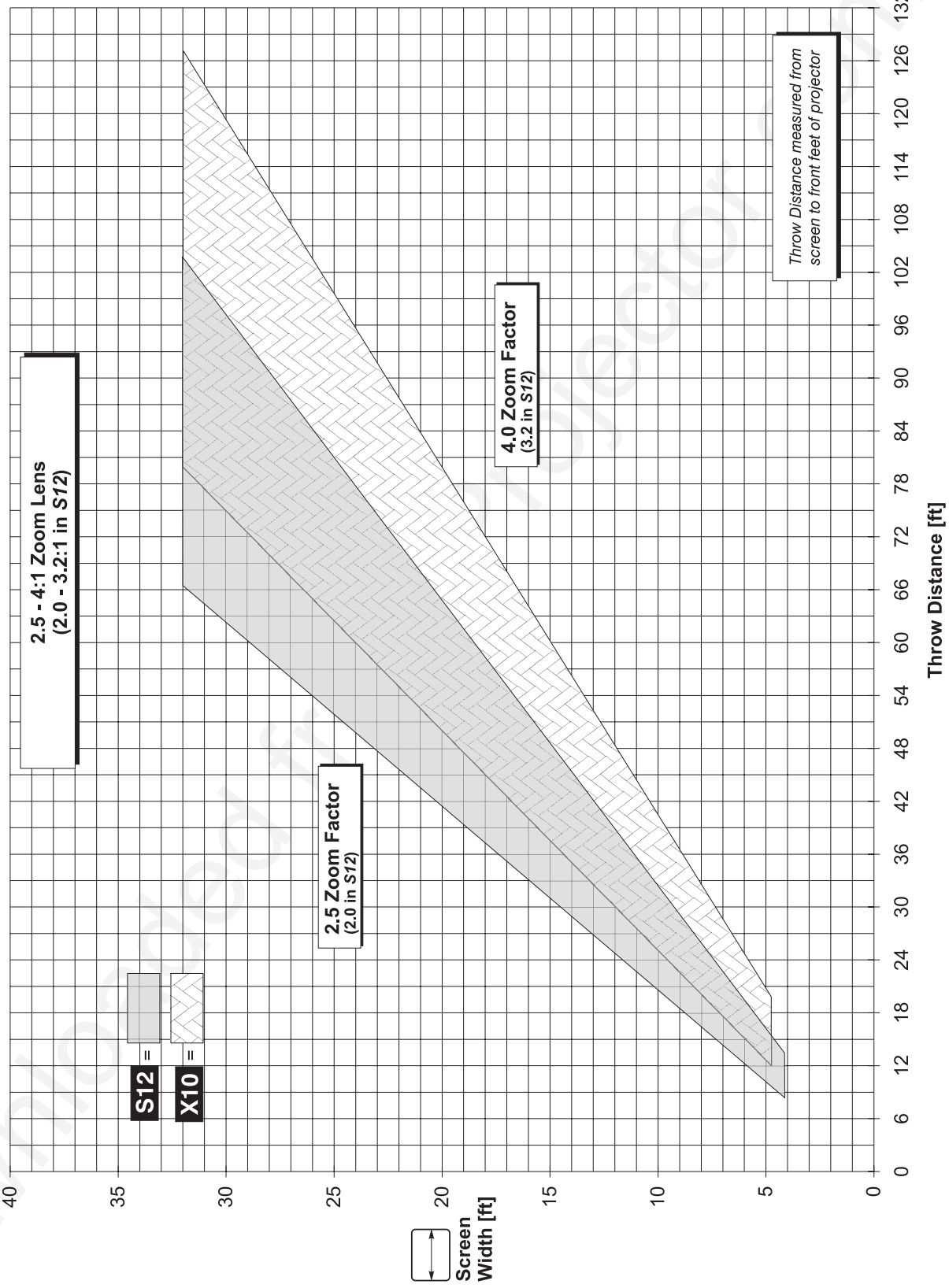

Downloaded from Projector.com

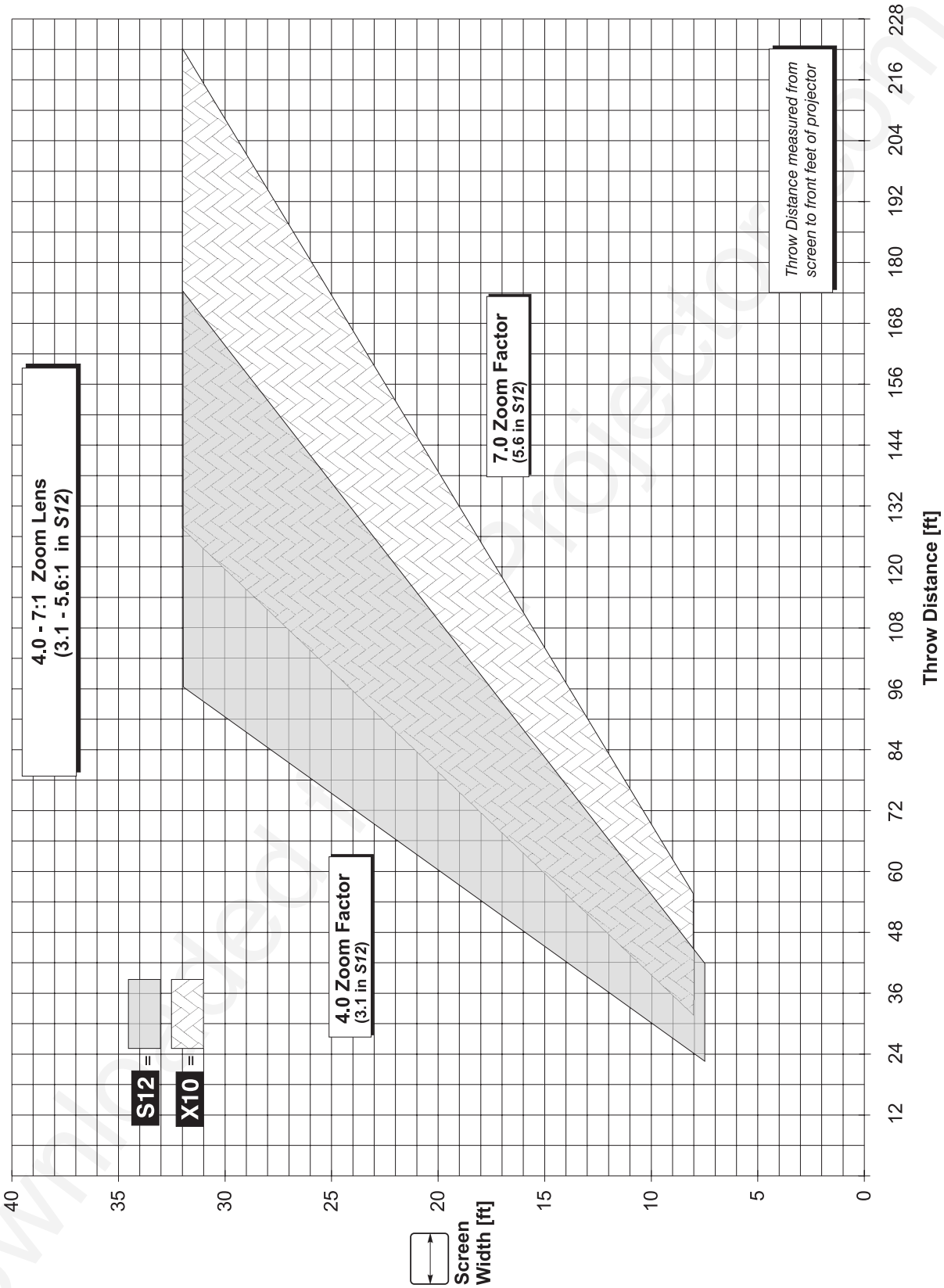

Downloaded from projectorscreen.com

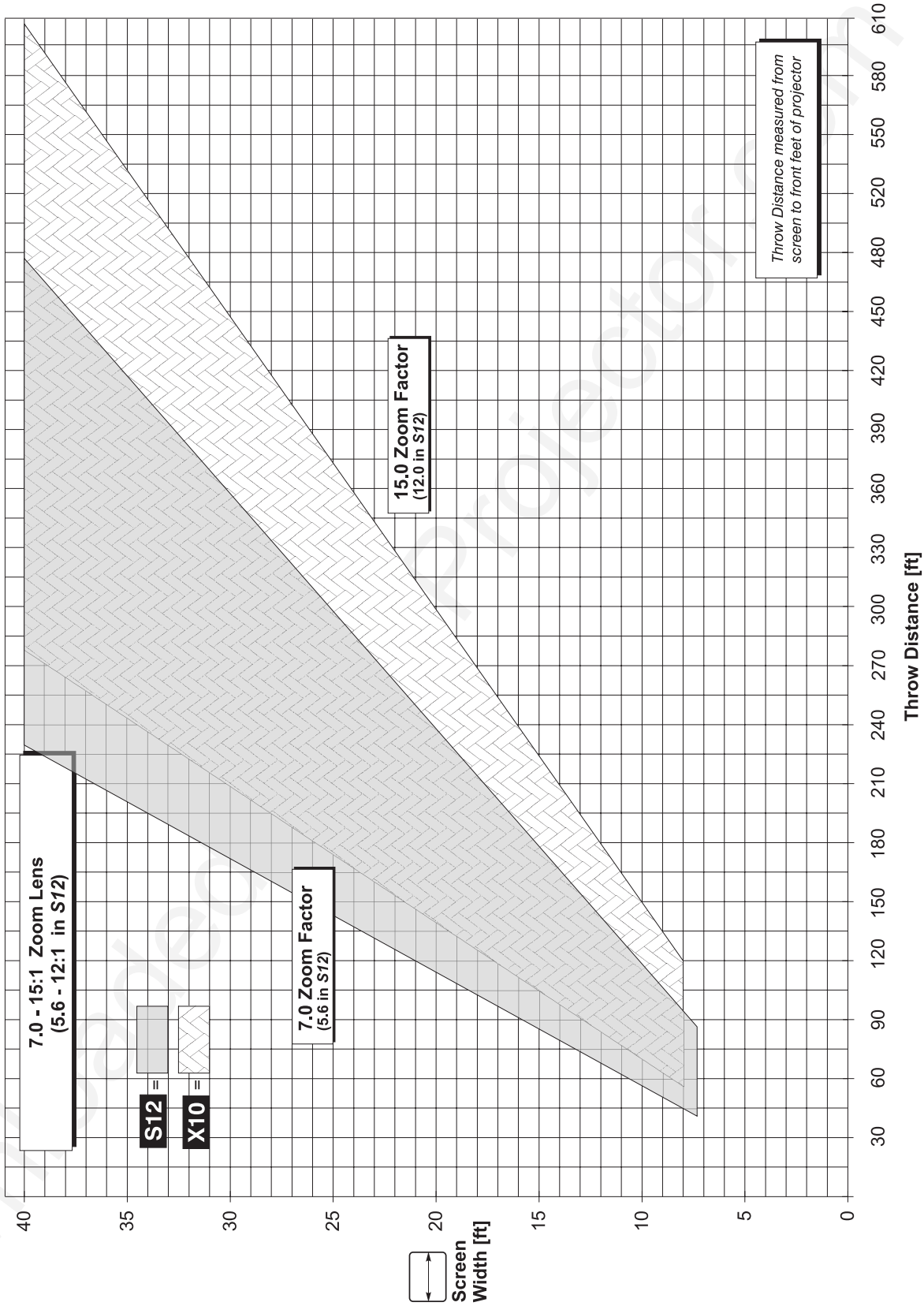

Downloaded from Projector.com

Downloaded from Projector.com

Appendix F

Optional Input Modules

There are many optional input modules and accessories currently available for this projector. Contact your dealer for a complete and up-to-date listing.

Marquee Signal Switcher 38-801050-xx

The *Marquee Signal Switcher* is a rack-mountable signal selector which can greatly increase the number of analog sources (inputs) available to the projector. Connected to **INPUT 1**, a single switcher provides up to 9 more sources for the projector. Additional *Marquee Signal Switchers* can be connected to the first, with their input locations (switcher#,slot#) selectable through the Input key on the keypad. Switcher inputs can also be selected at the switcher by pressing the appropriate front panel push-button, or through serial communications. See *Section 2*.

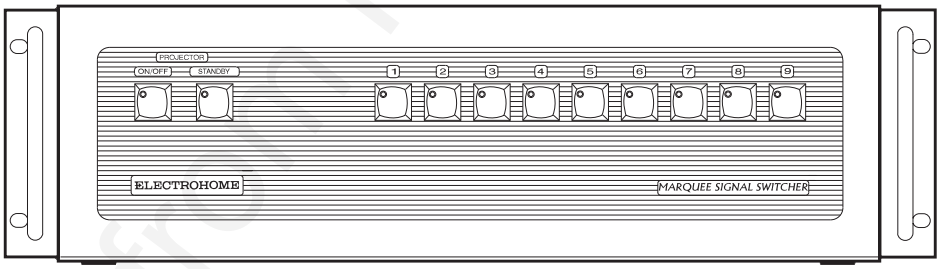

Features

- ◊ simple connection and push-button control
- ◊ easy to see, illuminated indicators
- ◊ 9 slots for analog interface modules *(NOTE: does not support digital interfaces)*
- ◊ RS-232 serial interface
- ◊ input for a wired remote keypad
- ◊ universal power input
- ◊ up to 9 switchers can be daisy-chained together with a projector

RGB500 Input Module 38-804606-xx

The *RGB500 Input Module* may be installed in this projector, a *Marquee Signal Switcher*, or a *Marquee Case/Power Supply*. The module receives analog RGB input signals from computers or other RGB source devices.

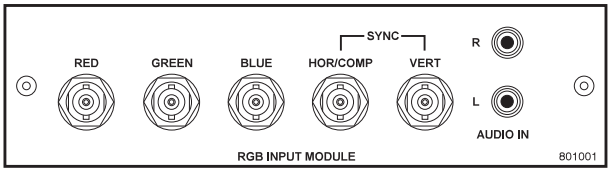

Downloaded from Projector.com

Features

- ◊ accepts 3, 4, or 5 wire RGB video (sync-on-green, composite sync, or separate horizontal and vertical sync), up to 500 MHz bandwidth
- ◊ BNC connectors for RGB signal inputs

NOTE: The audio connectors are not functional. Connect audio to an external audio system.

RGB400BA Input Module 38-804610-xx

The *RGB400 Buffered Amplifier Input Module* may be installed in a *Marquee Signal Switcher* or a *Marquee Case/Power Supply*. Connect three-, four-, or five-wire RGB video signals of up to 400 MHz bandwidth, signals typically produced by high-resolution computer or workstations. The buffering capability of the module enables the incoming signal to be sent to a remote destination. Inputs are 75S terminated.

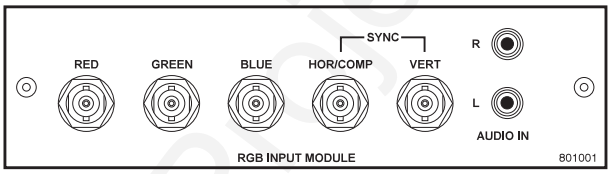

Features

- ◊ accepts 3, 4, or 5 wire RGB video (sync-on-green, composite sync, or separate horizontal and vertical sync)
- ◊ BNC connectors for RGB signal inputs
- ◊ Buffered signals to a remote destination

NOTE: The audio connectors are not functional. Connect audio to an external audio system.

RGB400 Active Loop-Thru Input Module 38-804607-xx

The *RGB400 ALT Input Module* may be installed in this projector, a *Marquee Signal Switcher*, or a *Marquee Case/Power Supply*. The module receives analog RGB input signals from computers or other RGB source devices. Video inputs are 75S terminated. Video outputs provide buffered loop-through to another display device.

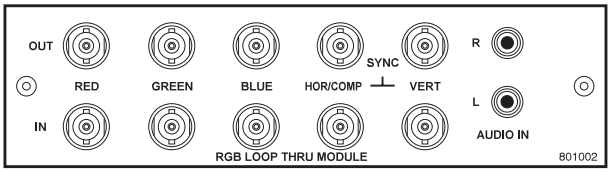

Features

- ◊ accepts 3, 4, or 5 wire RGB video (sync-on-green, composite sync, or separate horizontal and vertical sync)
- ◊ BNC connectors for RGB signal inputs
- ◊ buffered loop-through video outputs

NOTE: The audio connectors are not functional. Connect audio to an external audio system.

Downloaded from Projector.com

Composite / S-Video Input Module 38-804608-xx

The Composite/S-Video Input Module may be installed in this projector, a *Marquee Signal Switcher* or a *Marquee Case/Power Supply*. The module receives either composite video or S-video input signals from tape or disk players (do not connect both types of signals simultaneously). Video inputs are 75Ω terminated. Video outputs are provided for buffered loop-through to another display device.

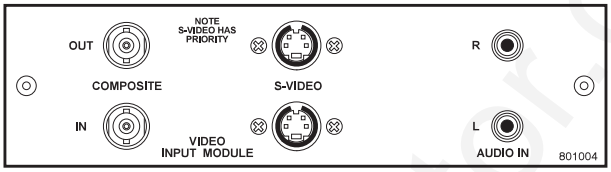

Features

- ◊ BNC connectors for composite RGB signals
- ◊ 4-pin mini-DIN connectors for S-Video signals
- ◊ buffered loop-through video outputs

*NOTES: **1)** This interface is not a decoder. NTSC, PAL, or SECAM signals must connect to the video decoder installed at **INPUT 3** / **INPUT 4**. **2)** The audio connectors are not functional. Connect audio to an external audio system. **3)** In this projector, do not connect **both** composite video and S-video signals to the Composite / S-Video Input Module–connect one or the other, even when plugged into a switcher.*

PC250 Analog Input Module 38-804609-xx

The *PC250 Analog Input Module* may be installed in this projector, a *Marquee Signal Switcher* or a *Marquee Case/Power Supply*. The module receives analog RGB input signals from IBM PC compatibles or Macintosh computers. Video inputs are 75Ω terminated. Video outputs are provided for buffered loop-through to another display device.

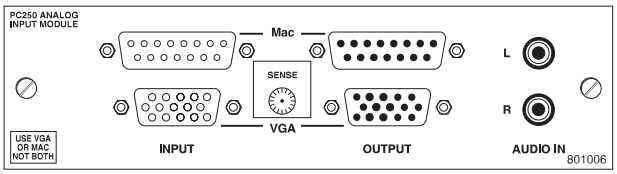

Features

- ◊ accepts VGA or MAC RGB video
- ◊ 15 pin D connectors for video
- ◊ active loop-through video outputs

*NOTES: **1)** This interface does not accept VGA and MAC signals simultaneously. **2)** The audio connectors are not functional. Connect audio to an external audio system. **3)** Trademarks are the rights of their respective owners.*

Downloaded from Projector.com

DVI Input Module 38-804635-xx

The DVI Input Module can be installed in the projector to display digital video input signals conforming to the DVI (Digital Visual Interface) standard (single-channel).

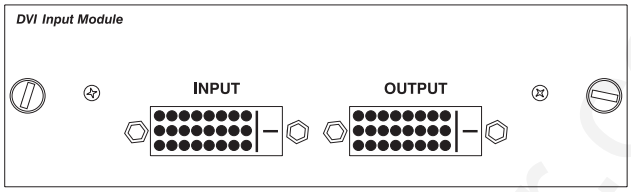

Features

- ◊ Supports Digital Visual Interface (DVI) single-channel
- ◊ Supports VESA® Extended Display Identification Data (EDID™)
- ◊ Provides an active-loop-through using a DVI connector (conforming to the DVI Specification)

Digital HDTV Module 38-804611-xx

The Digital HDTV Module can be installed in the projector at **INPUT 2**, where it accepts a digital 4:2:2 component HDTV signal (YCbCr) via a single **SERIAL IN** BNC connector. The signal can loop through the **SERIAL OUT** BNC out to another device (such as another projector). Inputs are 75S terminated.

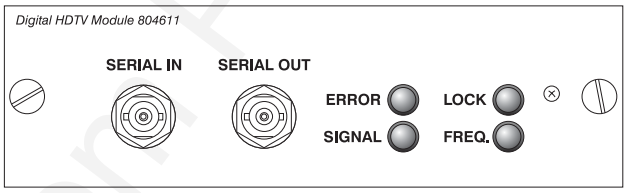

Features

- ◊ accepts a variety of digital HDTV 4:2:2 component signals (YCbCr), and de-serializes into a parallel 20-bit 4:2:2 component signal (10 bits each for Y and CbCr)
- ◊ SMPTE 292M compatible
- ◊ Two data rates: 1.485 Gb/sec or 1.485/1.001 Gb/sec.
- ◊ provides both a **SERIAL IN** and a **SERIAL OUT** BNC connector
- ◊ includes 4 status LEDs

Serial Digital Input Module 38-804602-xx

The *Serial Digital Input Module* (*SDI*) can be installed in the projector at **INPUT 2**, where it accepts a serial digital 4:2:2 component video signal (YCbCr) via a single

Downloaded from Projector.com

SERIAL IN BNC connector. The signal can loop through the **SERIAL OUT** BNC out to another device (such as another projector). Inputs are 75S terminated.

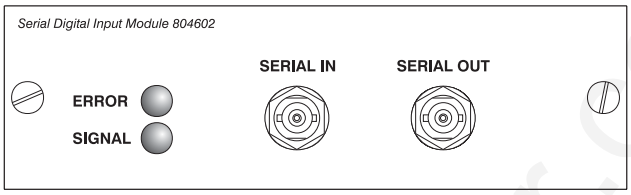

Features

- ◊ accepts serial digital 4:2:2 component video (YCbCr)
- ◊ provides both a **SERIAL IN** and a **SERIAL OUT** BNC connector
- ◊ includes status LEDs for signal and error

NOTE: Connect audio to an external audio system.

Marquee Case/Power Supply 38-801023-xx 38-801026-xx

The *Marquee Case/Power Supply* enables you to use an analog input module as a stand-alone interface. Two supplies are available: one for use with 120 volt line voltage (38-801023-XX), and the other for use with 220 volt line voltage (38-801026-XX). Both models include a 15 Vdc, 500 mA AC adapter.

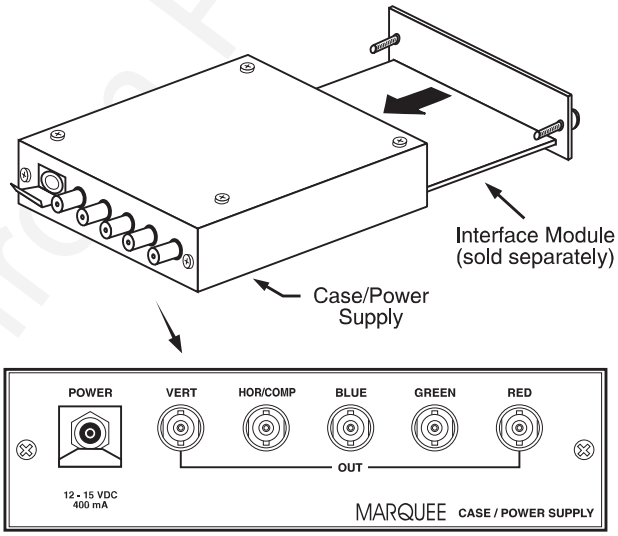

Features

- ◊ easy installation — no tools required
- ◊ the *Marquee Case/Power Supply* accepts the following input modules for use with this projector: *RBG500, RGB400 Active Loop-Thru, RGB400 Buffered Amplifier, Composite/S-Video,* and *PC Analog.* Digital inputs cannot be used.
- ◊ retaining clip to secure AC adapter
- ◊ non-slip feet
- ◊ supplied with 110 or 220 volt AC adapter

Downloaded from Projector.com

Downloaded from Projector.com

Index

A

AC Requirements, 2-1, 5-3
Advanced 10-bit (ADP), 3-39
  Noise and Filtering, 3-40
Anamorphic, 3-26
  And Tiled Image, 3-52
Arrow Keys, 3-9
Auto Gain Control. *See* Enable Decoder AGC
Auto Input Level, 3-36
Auto Setup, 3-24
AutoSource Checkbox, 3-23

B

Back IR Keypad, 3-44
Bad Sync, 3-53
Baud Rate, 2-25, 3-44
Blacklevels and Drives, 3-37
Brightness, 3-30
Brightness Key, 3-10, 3-30
Brightness Specification, 5-1
Broadcast Key, 3-45
Broadcasting, 3-11, 3-50

C

Calibrate Lens, 3-12
Ceiling Mounting, 2-13
Channel
  Locked, 3-23
  Name, 3-22
  Number, 3-19, 3-23
  Signal Type, 3-20
Channel Copy/Delete, 3-21
Channel Edit Menu, 3-22
Channel Key, 3-8, 3-19
Channel Selection, 3-20
Channel Setup Menu, 3-20
  And Enter Key, 3-21
  And Function Key, 3-21
Channels
  Creating Automatically, 3-19
  Creating in Channel Setup Menu, 3-21, 3-22
  Definition of, 3-19
  Deleting in Channel Setup Menu, 3-21
  Maximum Number, 3-18
Checkbox Toggles, 3-16
Clamp Tip, 3-37
Color (Adj.), 3-31
Color and Uniformity Menu, 3-42
Color Enable, 3-34, 3-37
Color Key, 3-10
Color Setup Menu, 3-31
Color Space, 3-31
Color Temperature, 5-1
  How to Copy, 3-34
  Interpolated, 3-33
  Modifying a Setup, 3-33
  Presets and Factory Presets, 3-34
  User, 3-34
Color Temperature Setup, 3-32
Communications Menu, 3-41
Component Video, 2-16
Components, 1-2
  Location and Use, 3-1
Composite Video
  Connecting, 2-16
  Extra, 2-19
  Loop-Through, 2-18
Configuration Menu, 3-40
Contrast Key, 3-10, 3-30
Contrast Ratio, 5-1
Custom Sizing, 3-25

D

Dark Interval, 3-39
Decoder Luma Delay, 3-36
Detail, 3-30
Detail Key, 3-10, 3-30
Display Channel List, 3-41
Display Error Messages, 3-41
Display Slidebars, 3-41

E

Enable Decoder AGC, 3-36
Enter Key, 3-9
Error Messages, 3-52
  Bad Sync, 3-53
  H-Sync or V-Sync, 3-53
  Input Signal Errors, 3-53
  Invalid User Entry, 3-53
  No Signal, 3-53
  System Warnings/Errors, 3-53
Exit Key, 3-9

Downloaded from Projector.com

F

Filter (Air) Replacement, 4-8
Filter (Air) Warning, 4-2
Filter (Image Adjustment), 3-27
Flying the Projector, 2-3
Focus, 2-5, 3-2
Folded Optics, 2-13
Formats
  Video, 5-2
Freeze Image, 3-43
Front IR Keypad, 3-44
Full Height, 3-26
Full Screen, 3-25, 3-26
Full Width, 3-26
Function Key, 3-12

G

Gamma, 3-32
Geometry Menu, 3-42

H

Handles, 3-5
HDTV Connection, 2-19
Help
  Context-sensitive, 3-14
  From presentation level, 3-15
  Help Key, 3-13
Hoisting, 2-3
Horizontal Filter, 3-40
Horizontal Offset, 2-12
Horizontal Position, 3-28

I

Image Adjustments, 3-23
Image Orientation, 2-21, 3-40
Image Settings, 3-30
InMenu Checkbox, 3-23
Input
  Connection, 2-1, 2-14
  Definition of, 3-18
  Selecting/switching, 3-18
  Selection, 2-2
Input 1, 2-15
  Extra Video Sources, 2-19
Input 2, 2-19
Input 3
  Connection, 2-16
Input 4
  Connection, 2-16, 2-17
Input Key, 3-8
Input Levels, 3-36
Input Video Black, 3-35
Installation
  Front Screen, 2-4
  General Considerations, 2-2
  Horizontal Position, 2-12
  Leveling, 2-12
  Quick Setup, 2-1
  Rear Screen, 2-5, 2-14
  Room Lighting, 2-6
  Types, 2-4
  Vertical Position, 2-9
Intensity (Lamp Mode), 3-48
Interfaces,Optional, 2-19
Interpolated, 3-33
Interpolated Color, 3-32, 3-33
Invalid Channel, 3-53
Invert Stereo3D, 3-39
IR Sensors, 3-5, 3-44

K

Keypad
  Guidelines, 3-7
  Types, 3-5
Keypad Batteries, 4-3
Keypad Protocol, 2-27, 3-13, 3-45, 4-12
  Changing in Keypad, 2-28
  Conflicts, 2-30
  Default, 2-27, 3-13
  Hard-wired, 2-28
  Software Method, 2-30
Keypad, Built-in, 3-6
Keypad, IR Remote, 4-3
  Description and Use, 3-6
  Specifications, 5-3
Keypad, Wired, 3-7, 3-45
Keystone, 2-9
Keystone Adjustment, 3-29

L

Lamp
  Cleaning, 4-3
  Mode, 3-47
  Recording Serial Number, 3-48
  Specifications, 5-3
Lamp Counter, 4-4
Lamp History, 3-48
Lamp Hours, 3-47
Lamp Limit, 3-47
Lamp Menu, 3-47
Lamp Message, 3-47
Lamp Modes
  Max Brightness, 3-48
  Power, 3-48
Lamp Replacement
  Warning, 4-2
Lamp Replacement Procedure, 4-4
Lamp Serial Number, 3-47, 4-7
Language, 3-40
LCD Status Display, 3-4
LEDs, Status, 3-4, 3-54
Lens
  Calibration, 3-12
  Cleaning, 4-3
  Tilt, 4-11
  Types Available and Specs, 5-1
Lens Control Menu, 3-11
Lens Installation/Replacement, 4-9
Lens Key, 3-11
Leveling, 2-1, 2-12, 2-21
  Special Mounting, 2-12
Locked Channel Checkbox, 3-23

Downloaded from Projector.com

Luma Delay, 3-36

M

Menu
  Channel Edit, 3-22
  Channel Setup, 3-20
  Color and Uniformity, 3-42
  Color Setup, 3-31
  Color Temperature Setup, 3-32
  Communications, 3-41
  Configuration, 3-40
  Geometry, 3-42
  Image Settings, 3-30
  Input Levels, 3-36
  Lamp, 3-47
  Lens Control, 3-11
  Main, 3-14
  Menu Preferences, 3-41
  Odd Pixel Adjustment, 3-43
  Service, 3-43
  Size and Position, 3-24
  Status, 3-49
  Tiling Setup, 3-50
  Video Options, 3-35
Menu Font Size, 3-41
Menu Key, 3-9
Menu Location on Screen, 3-41
Menu Navigation, 3-14, 3-23
Menu Preferences Menu, 3-41
Minimum Delay, 3-38
Mounting, 2-12
Multiple Projectors, 2-28, 3-49
  And Tiling an Image, 3-50
Mute Key, 3-12

N

Network, Split. See Split Network
Networks, 2-25
  Providing a Back-up, 2-26
  RS-232 and/or RS-422, 2-24
No Resizing, 3-25
No Signal, 3-53
Noise Reduction, 3-40
Numerical Entry, 3-18

O

Odd Pixel Adjustment, 3-43
Offsets, 3-3
  Horizontal, 2-12
  Vertical, 2-9
Optional Input, 2-19
Options/Accessories, 5-4
OSD Key (On-Screen Display), 3-13

P

Peak Detector, 3-37
Pixel Key, 3-11
Pixel Phase, 3-27, 3-30
Pixel Tracking, 3-27, 4-14
Position Key, 3-11
Power
  Connection, 2-1
  Requirements, 2-21, 5-3
  Setting for Lamp, 3-48
  Warning, 2-1, 4-2
Power Key, 3-7
Presentation Level
  Definition, 3-7
Processing Mode, 3-38
Proj Key, 3-10
Projector
  Angles of Operation, 2-12
  Cleaning/Maintenance, 4-3
  Components, 5-4
  Dimensions, 5-3
  Hoisting, 3-5
  Number, 3-18, 3-46, 3-49
  Position and Mounting, 2-21
  Resetting, 3-5, 3-54
  Service, 4-3
  Transport by hand, 2-2
  Ventilation, 2-8, 4-2
Protocols, 2-27, 3-44
  Changing, 2-28
  Changing in Projector, 3-44
Pull-Down Lists, Use of, 3-16

R

Resize
  Default, 2-2
Resize Presets, 3-24
Resizing, 3-25
  A Tiled Image, 3-51
Resolution, 5-1
RGB
  Connection, 3-3
  Frequencies, 5-2
RS-232, 2-20, 2-22, 2-24, 2-28, 3-44, 3-49, 3-50, 5-2
RS-232 and/or RS-422, 2-26
RS-422, 2-23, 3-44, 3-49, 5-2

S

Screen Size, 2-5, 2-8, 2-9, 4-14
  and Throw Distance, 2-5
Select Color Temp, 3-32, 3-33
Serial Ports
  Communication Cables, 3-44
Service Menu, 3-43
Service Requirements, 4-3
Shutter, 3-3
Shutter Key, 3-12
Size and Position, 3-24
Sizing, 3-25, 3-26
Slidebar Adjustment, 3-15
Slidebars
  "Direct", 3-16, 3-23
  Using, 3-15
Slidebars, Double, 3-16
Slot, 3-23
Source
  Connection, 2-1

Downloaded from Projector.com

Specifying a Location, 3-8
Source Setup. *See Channel*
Split Network, 3-46
Options for Setup, 2-26
When to Use*, *3-46
Split Networks
And Downloads, 2-26
Stacking, 2-2
Standby Key, 3-8
Status LEDs, 3-3
Status Menu, 3-49
S-Video
Connecting, 2-17
Extra, 2-19
Loop Through, 2-18
Switcher, 3-23, 3-44
Switcher Connection, 2-20
Sync
Def. and types, 5

T

Test Key, 3-13
Text
Editing, 3-17
Throw Distance, 2-1, 4-11, 4-14
Definition, 2-9
Sample, 2-9
Tiling Setup, 3-50
Resizing, 3-51
Time-outs, 3-15
Tint Key, 3-10, 3-31
Toggle Keys, 3-9
Troubleshooting, 4-11
Two-Way Controller, 3-7

U

User Color Temperatures, 3-34

V

VCR Checkbox, 3-35
Vertical Offset, 4-11
How to Adjust, 3-2
Vertical Position, 3-28
Video, 3-3
Formats, 5-2
Video Options, 3-35
Video Standard, 3-35
Video Termination, 2-18, 3-35
Volume Key, 3-10

W

Warnings, 4-1
White Boost, 3-39
White Levels, 3-33
Wired Keypad, 3-45

Y

YPbPr, 3-31
Connecting, 2-16

Z

Zoom, 3-2
Installing a zoom lens, 4-9

Downloaded from Projector.com