myprojectorlamps.com

The most trusted, dependable name in projector lamp sales.

http://www.myprojectorlamps.com

http://www.myprojectorlamps.ca

http://www.myprojectorlamps.eu

The following projector manual has not been modified or altered in any way.

CHRISTIE Roadie 25K User's Manual

Table of Contents

		Section	Contents	Page
1	Introduction	1.1	The Projector	1-1
		1.2	List of Components	1-3
		1.3	Purchase Record and Service Contacts	1-3
		1.4	Ethernet Settings for This Projector	1-3
		1.5	Who Should Use This Manual	1-3
2	Installation & Setup	2.1	Quick Setup	2-1
		2.2	Installation Considerations	2-5
		2.3	Projector Position and Mounting	2-10
		2.4	Installing a Lens, Lamp & Cooling	2-16
		2.5	Connecting Sources	2-22
		2.6	Connecting Communications	2-28
		2.7	Connecting Multiple Projectors	2-32
		2.8	Connecting the Ballast	2-38
		2.9	Initial Power-up	2-39
		2.10	Maximizing Light Output	2-40
		2.11	Basic Image Alignment	2-40
		2.12	Boresight Adjustment	2-41
		2.13	Internal Optical Adjustments	2-44
		2.14	Remote Keypad Protocols and Conversion	2-45
3	Basic Operation	3.1	Projector Basics	3-1
			• *Components/Features*	3-1
		3.2	Using the Keypads	3-6
		3.3	Power-up Procedure / Checklist	3-14
		3.4	Power-down Procedure	3-15
		3.5	Navigating the Menus	3-15
		3.6	Using Inputs and Channels	3-19
		3.7	Adjusting the Image	3-24
		3.8	Adjusting System Parameters and Advanced Controls	3-37
		3.9	Working with the Lamp	3-47
		3.10	*Status* Menu	3-54
		3.11	Using Multiple Projectors	3-55
		3.12	Remote Control of the Projector	3-64
		3.13	Working with the Lenses	3-65
		3.14	Error Conditions	3-66
4	Maintenance	4.1	Warnings and Guidelines	4-1
		4.2	Maintaining Proper Cooling	4-3
		4.3	Maintenance and Cleaning	4-4
		4.4	Replacing the Lamp and Filter	4-6
		4.5	Replacing a Lens	4-12

continued…

5 Troubleshooting

5.1 Power 5-1
5.2 Lamp 5-1
5.3 Ethernet 5-2
5.4 Displays 5-2

6 Specifications

6.1 Specifications 6-1

Appendices

A Glossary A-1
B Remote Keypad B-1
C Serial Communication Cables C-1
D Throw Distance D-1
E System Integration E-1
F Optional Input Modules F-1

NOTE: Due to continuing research, all information in this manual is subject to change without notice

Section 1

Introduction

1.1 The Projector

The *Roadie 25K* is a revolutionary split-body DMD™ projector utilizing 3-chip *Digital Light Processing™ (DLP™)* technology from Texas Instruments. Its unique separation of projection head and lamp ballast means both parts can be flown and rigged with greater ease, creating the ideal solution for challenging rental/staging installations and tight spaces. With 2048 x 1080 resolution, light output of up to 25000 ANSI lumens, and 10-bit image processing all standard, *Roadie 25K* images are stunning in their size, brilliance and quality. This tough, user-friendly projector is built for frequent transport and quick setup, even on sprawling networks—perfect for any large audience venue demanding effortless installation and operation.

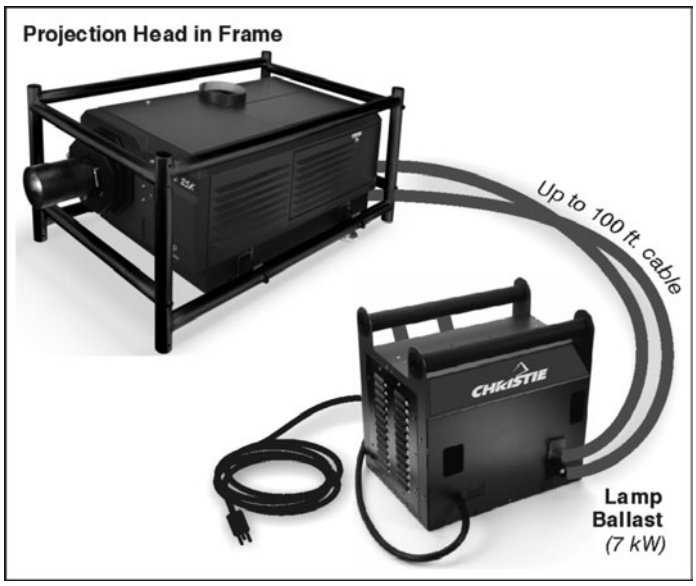

Roadie 25K

Main Features

General

- *DLP™* 3-chip electronics with true 2048 x 1080 native resolution
- Split-projector design; ballast is separate from projection head
- Versatile electronic and optical scaling to automatically maximize the display
- 10-bit digital processing *(8-bit for interlaced high-definition video)*
- Can be rigged, flown and/or stacked with adjustable FredFrame™ hardware

Lamps / Light Output

- Choice of 4 Xenon bubble lamp sizes and ratings
- Up to 25000 ANSI lumens *(6kW lamp)*
- Standard achievable contrast ratio 650:1 ANSI, up to 1800:1 full field on/off
- *LampLOC™* motorized lamp alignment (auto or custom adjustment)
- *LiteLOC™* for maintaining brightness over time
- Internal electromechanical shutter for quick picture mute and black stand-by
- Optional internal optical components for improved contrast ratio and/or wider color gamut

Inputs

- One analog RGBHV/YPbPr input with 5 BNCs
- One DVI-I input for either digital RGB/YCrCb or analog RGB/YPbPr signals
- One analog composite-video input, one analog S-video input
- Built-in multi-standard decoder (NTSC, NTSC 4.43, PAL, PALM, PALN, PAL60, SECAM)
- One Dual SD/HD-SDI input *(installed in one of two optional input slots. Available 2005.)*
- Up to 220 MHz pixel rate
- Compatible with all current HDTV formats
- Motion adaptive deinterlacing of 50 fps- and 60 fps-originated standard and high-definition interlaced sources
- Inverse telecine deinterlacing of film-originated standard and high-definition interlaced material with 3:2 pulldown (60 fps) or 2:2 pulldown (50 fps).

Lenses

- Choice of standard high-brightness zoom lenses *(ranging from 1:1 up to 8.5:1)*
- Choice of optional high-contrast lenses *(ranging from 1.25 up to 8.5:1)*
- Manually adjustable zoom, focus and H/V offsets
- Optional lens mount for 1.25x anamorphic lens producing 2.39:1 “scope” images

Special Display Functions (SELECTED)

- Auto setup, with seamless cut-and-fade source switching
- Electronic brightness uniformity, whitelevel edge blending and color matching
- Optional image warping/blending for unusual angles and/or screens *(ChristieTWIST available mid-2005)*

Communications and Diagnostics

- 3 standard keypads: built-in and convertible IR-to-wired remote
- Front and rear IR sensors
- Ethernet, RS232, RS422 and GPIO control ports
- Built-in ChristieNET™ connectivity
- LED for 2-digit error codes, plus LCD for text-based status display
- Large LED status light for long-distance alerts
- Double voltmeters: one for lamp ballast, one for projection head

How The Projector Works

PROCESSING & PROJECTION: The *Roadie 25K* accepts a variety of signals for projection in large screen applications. High brightness light is generated by a short-arc Xenon lamp, then modulated by three DMD (Digital Micromirror Device) panels responding to incoming data streams of digitized red, green or blue color information. As these digital streams flow from the source, light from the responding “on” pixels of each panel is reflected, converged and then projected to the screen through one or more front lenses, where all pixel reflections are superimposed in sharp full-color images.

STACKING & RIGGING: A projector secured in the optional FredFrame™ can be stacked and, if desired, flown with another framed projection head using the *Roadie 25K Stacking and Rigging Kit* and standard rigging techniques to secure the two frames together. Each frame provides precision roll, pitch and yaw adjustments of the projector for precision image alignments. Corresponding lamp ballasts can be located up to 100 feet away, flown or not.

1.2 List of Components

The following components make up a complete *Roadie 25K* system (see Figure 3.1):

- ❑ Projection Head. *Includes:*
  - Line cord
  - Rental/staging remote keypad *(incl. batteries for IR use, and cable for wired use)*
  - Security keys for lamp and igniter service access, plus assorted Allen keys
  - *Roadie 25K User's Manual*
- ❑ Lamp Ballast (7 kW)
- ❑ Cable kit *(incl. 2 lamp power cables and 2 communication/control cables)*
- ❑ Extractor Kit, 50/60 Hz
- ❑ Choice of lamp kit *(incl. protective gear)*
- ❑ Choice of lens *(Anamorphic lens and mount are also both optional)*
- ❑ FredFrame™ *(Optional. Includes fork lift rails for bottom.)*

1.3 Purchase Record, and Service Contacts

Whether the projector is under warranty or the warranty has expired, Christie's highly trained and extensive factory and dealer service network is always available to quickly diagnose and correct projector malfunctions. Complete service manuals, updates, and service instructions are available to service technicians for all projectors.

Should you encounter a problem with any part of the projector and require assistance, contact your dealer or one of the Christie service depots listed on the back cover of this manual. If you have purchased the projector, fill out the form below and keep with your records.

Purchase Record

Dealer:	
Dealer Phone Number:	
Projection Head Serial Number:	
First Lamp Serial Number:	
Lens Serial Number:	
Lamp Ballast Serial Number:	
Purchase Date:	

** NOTE: Both serial numbers are located at the rear of the product.*

1.4 Ethernet Settings for This Projector

At manufacture, the following Ethernet settings were defined in the projector:

Factory-set Ethernet Settings for This Projector

Default Gateway	n/a
DNS Server	n/a
Projector IP Address	0.0.0.0 *(enables use of DHCP server for IP address)*
Subnet Mask	255.255.255.0 (fixed)

1.5 Who Should Use This Manual ⚠

USERS / OPERATORS: This manual is intended for trained users authorized to operate professional high-brightness projection systems in a variety of environments. Such users may also be trained to replace the lamp and air filter, but cannot perform any other functions inside the product enclosures.

SERVICE / INSTALLERS: Only trained and qualified Christie service technicians knowledgeable about all potential hazards associated with high voltage, ultraviolet exposure and high temperatures generated by the lamp and associated circuits are authorized to perform service functions inside the product enclosures.

Section 2

Installation & Setup

This section explains how to install, connect, and optimize the projector for smooth operation. For more comprehensive instructions and operating details, refer to the remaining sections of the manual.

2.1 Quick Setup

Follow these steps for quick setup of the projector in a basic front mount position.

STEP 1 ' Position the Projection Head

Locate the projection head at an appropriate throw distance (projector-to-screen distance) and vertical position. See *2.3, Projector Position and Mounting* and *Appendix D*. Make sure that the projector is level from side-to-side, and do not invert. Locate the lamp ballast so that its 4 cables can reach the rear of the projection head.

STEP 2 ' Install Lamp, Lens and Heat Extractor

Refer to *2.4, Installing a Lens, Lamp & Cooling* for instructions.

STEP 3 ' Connect a Source

Connect your desired source to the appropriate connector(s) on the main input panel located on the side of the projector (lens side).

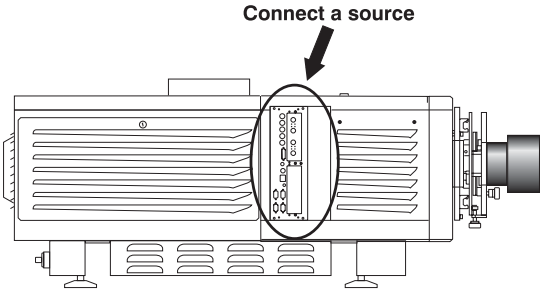

STEP 4 ' Connect to Lamp Ballast and Power

⚠ WARNINGS ⚠

- **Connect all 4 cables to the projection head *prior* to turning the ballast breaker on.**
- **Follow all labeling exactly.**

HEAD-TO-BALLAST: Connect all 4 ballast cables—two DC power cables, and 2 communication/control cables—between the projector rear and lamp ballast.

See Figure 2.1.

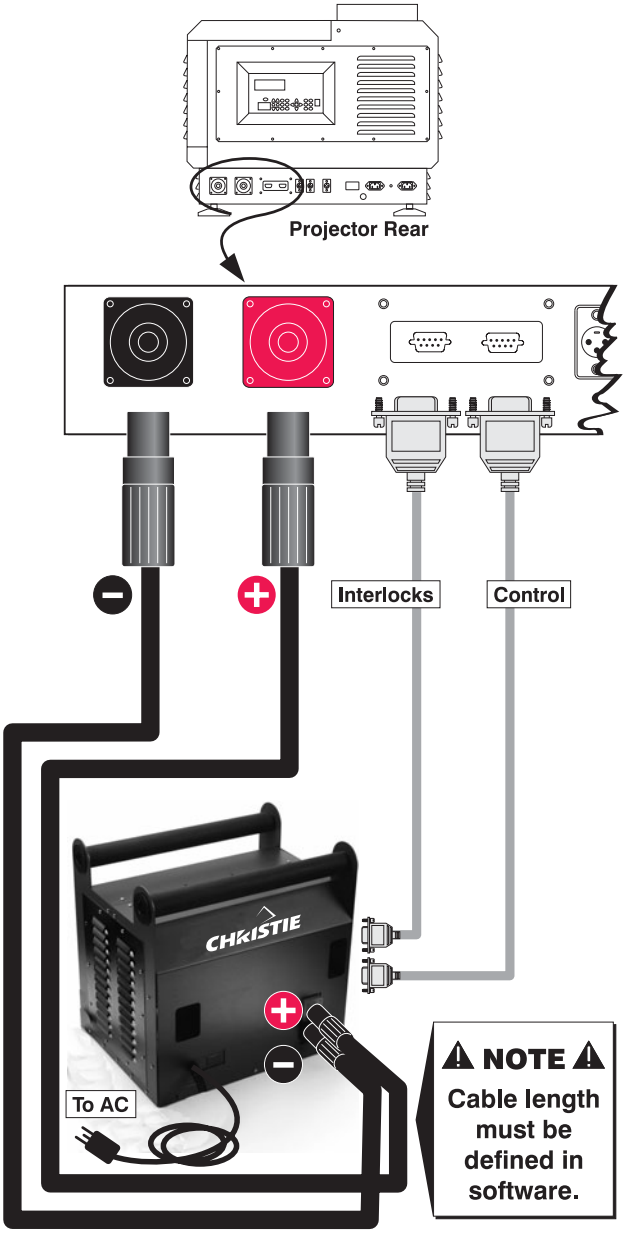

Figure 2.1. Connect Head to Ballast

BALLAST-TO-AC: See Figure 2.2. Connect the ballast's integral 3-phase 30 amp line cord to your AC supply—you may have to modify the plug for your site.

NOTE: Before connecting the ballast to AC, a qualified electrical technician must make sure the ballast's plug type and ***Input Power Range Switch*** *match the line voltage available at the site. Remove the lamp ballast cover to access the switch and determine its setting—toggle LEFT for 200 VAC supplies, toggle RIGHT for 400 VAC supplies (factory default=200 VAC). Modify the plug type as necessary—as a delta load with safety ground, it has no neutral.*

Confirm that the ballast's 3-phase status lights are on and that the adjacent voltmeter displays an acceptable AC level for your ballast and region. See *Section 6, Specifications* for details. Then set the ballast AC on/off switch to ON and listen for the internal cooling fan start-up. *NOTE: There is no other indication of "ballast ON" status.*

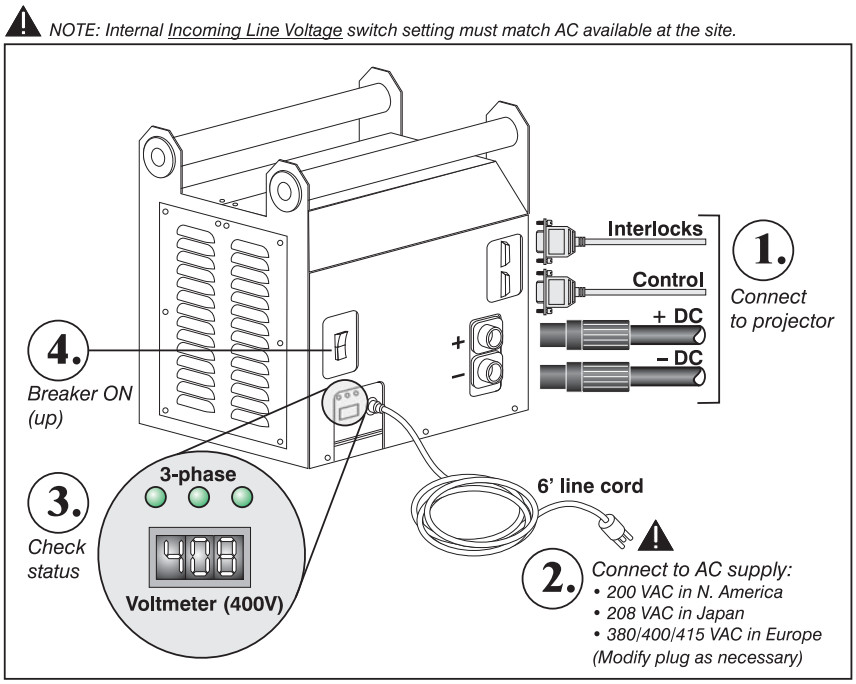

Figure 2.2. Ballast Connection and Power-up

HEAD-TO-AC: Connect the Christie-supplied IEC 320 (220V) 15-amp line cord to your AC supply. ***Do not substitute other cords.*** Input power required is 200 - 240 VAC (nominal), 50 to 60 Hz @ 3 amps for 208 V.

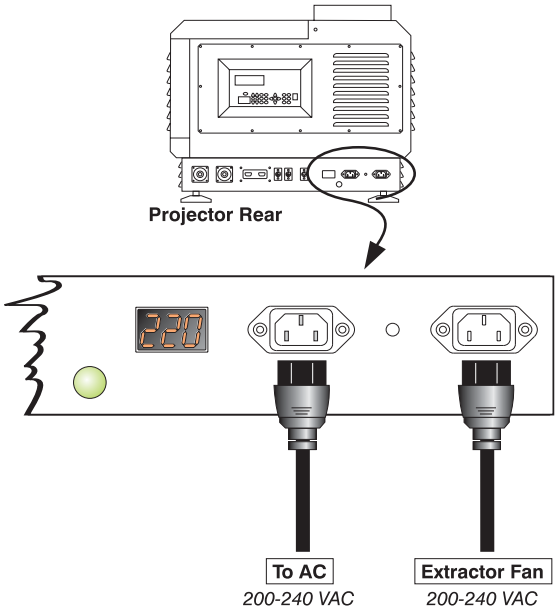

⚠ WARNING ⚠

Do not attempt operation if the AC level is not within the specified voltage and power range for the projection head.

EXTRACTOR: Also plug the extractor fan into the projector. See *2.4, Installing a Lens, Lamp, & Cooling*

At this point, the projection head is in a type of "standby" mode only—the voltmeter should both display the incoming voltage and the adjacent main **PROJ. STATUS** light should be yellow, and light engine compartment fans are running but the rest of the projection head is off.

STEP 5 ' Set Lamp Type

⚠ WARNING ⚠

Explosion hazard. Keep the projection head *OFF* until you have defined which lamp type is installed.

Before powering up the projector and igniting the lamp, you must define in memory which size lamp is installed, otherwise you risk severely overdriving or underdriving a lamp. Record on the “Lamp Installed” label too.

1. Press (Menu). The Status Display at the rear of the projector will show a “Lamp Size” of 2000, 3000, 4500 or 6000 watts, depending on its last setting. Factory default=6000.

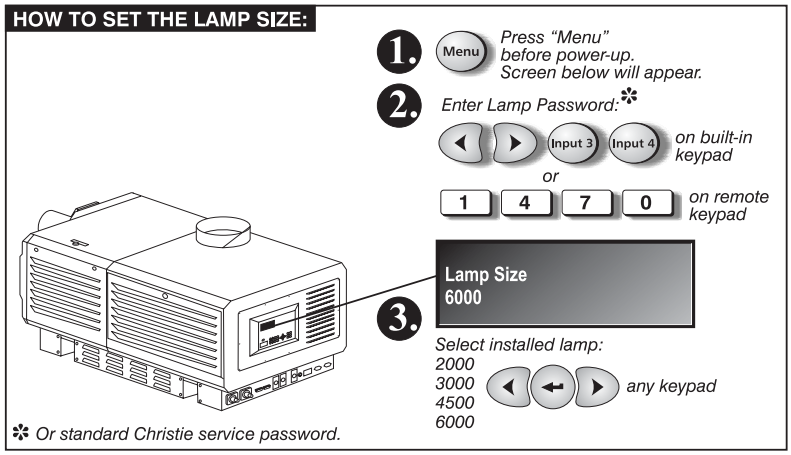

Figure 2.3. Setting Lamp Size

2. Enter either the Lamp Password (see Figure 2.3), or the Christie service password. *NOTE: Password is required unless the “Enable Password” service option has been turned off.*
3. Use (◀) (▶) to select which lamp is currently installed. Make sure the lamp type is also indicated on the lamp door label—use a small sticker from the front cover of this manual, or mark with a pen.
4. When the Status Display shows the correct lamp type, the projector and lamp can be turned on.

*NOTE: Lamp size can also be changed in the **Service** menu (Service password required) if the projector is running, but will not take effect until the next power-up. Whenever possible, define the lamp size **before** igniting the lamp.*

STEP 6 ' Turn the Projector and Lamp ON

Using either the built-in or remote keypad, do one of the following to turn the projector on and ignite the lamp.

- Press *and hold* (⏻) for at least two seconds

—or—

- Press (⏻) (▲)

—or—

- Press (⏻) (⏻)

The main **PROJ. STATUS** light at the rear of the projector should be green when the projector is up-and-running. For best results, let the projector warm up for about five minutes.

STEP 7 ' Select the Source

Using either the remote or built-in keypad, press (Input 1), (Input 2), (Input 3), (Input 4), (Input 5) or (Input 6) to select and display the image for the corresponding source connected in Step 3. The display will resize as needed, producing an image as large as possible for the type of source present.

STEP 8 ' Adjust the Lens

Turn the focus knob to sharpen the image. Adjust the zoom ring on the lens to increase or decrease image size (*not available when using the 1:1 fixed lens*). If desired, use the horizontal and/or vertical offset knobs to shift the image location.

STEP 9 ' Set Cable Length

In the *Lamp* menu, set the "Cable Length (m)" slidebar to match the length of the high-voltage DC cables connected between your lamp ballast and projection head. This regulates the voltage drop that occurs over distance, and ensures that adequate voltage reaches the lamp. Particularly in projectors rented for temporary installations, this setting may have to be changed from its last use. Adjustment range is 2-30m (6½-100 ft.).

Press (Auto Setup) and/or (Menu) to refine other display parameters as necessary. See also *3.6, Using Inputs and Channels.*

2.2 Installation Considerations

Although the *Roadie 25K* is carefully engineered to deliver an exceptional quality high brightness, high resolution output, your final display results could still be compromised if the projector is improperly installed. This subsection discusses issues to consider before proceeding with a final installation. Even for temporary installations, this information will help you to better understand what may be done to ensure optimized images.

Screen Types ' Front Screen Installations

This projector is intended for use with flat or slightly curved screens, front or rear, ranging from about 5 meters (16 ft.) to 25 meters (82 ft.) wide. Although flat screens generally offer a low gain similar to a matte white wall paint—approximately 1 with a viewing angle just under 180°—and are considered most effective when ambient light is low, this difference in gain may be negligible given the very high light output from this projector. In addition, incident light reflects equally in all directions so the audience can see the display from more acute viewing angles. See Figure 2.4.

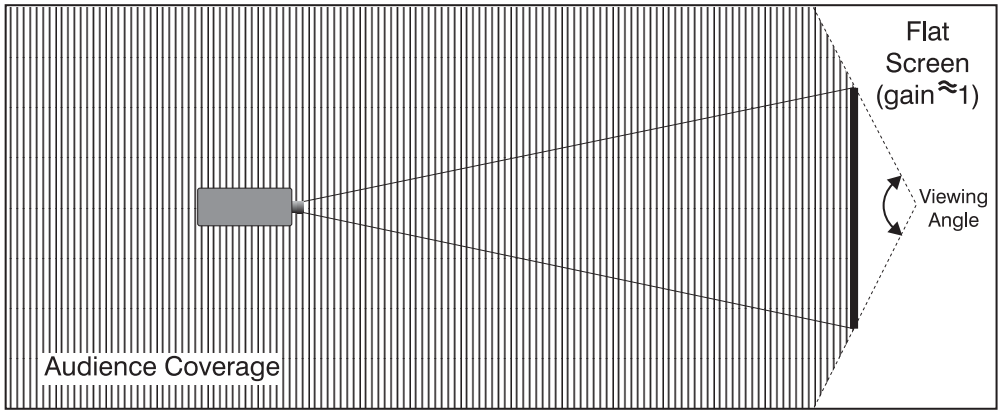

Figure 2.4. Audience Coverage with a Flat Screen

NOTE: ***Roadie 25K*** *lenses are designed primarily for use with flat screens, but the projector's depth-of-field range allows the lens to be focused on mildly curved screens as well. While focus remains sharp in the corners, there may be significant pincushion distortion, primarily at the top of the screen.*

Rear Screen Installations

There are two basic types of rear screens: diffused and optical. A *diffused* rear screen has a surface which spreads the light striking it. Purely diffused screens have a gain of less than 1. The main advantage of the diffused screen is its wide viewing angle, similar to that of a flat screen for front screen projection. *Optical* rear screens take light from the projector and redirect it to increase the light intensity at the front of the screen. This reduces it in other areas, and creates a viewing cone similar to that of a curved front screen installation.

To summarize, optical screens are better suited for brightly lit rooms where the audience is situated within the viewing cone. Diffused screens may be better suited when a wide viewing angle is required but there is low ambient room lighting.

Screen Size

Screen size (image size) may be up to 145 feet across, depending on your lens and ambient light level. Choose a screen size appropriate for your lens and application. Keep in mind that if the projector will be used to display much text information, the image size must allow the audience to recognize all text clearly. The eye usually sees a letter clearly if eye-to-text distance is less than 150 times the height of the letter. In other words, small text that is simply located too far from the eye will be illegible no matter how sharply and clearly it is displayed.

NOTE: Screens with aspect ratios (proportion) of 4:3 are typically specified by diagonal size, but screens having other aspect ratios—such as the 2048 x 1080 of the ***Roadie 25K****— are usually specified by their horizontal width. See below.*

Table 2.1. Matching Lenses to Screen Size

Lens Type	Screen Width (<—>)
1:1 fixed	14-145 ft.
1.25 – 1.45:1 zoom	10-121 ft.
1.45 – 1.8:1 zoom	8-102 ft.
1.8 – 2.4:1 zoom	6-83 ft.
2.2 – 3.0:1 zoom	5-66 ft.
3.0 – 4.3:1 zoom	3-49 ft.
4.3 – 6.0:1 zoom	2.5-35 ft.
5.5 – 8.5:1 zoom	2-27 ft.

Screen Aspect Ratio

Aspect ratio describes the proportion of the display and is expressed as the ratio of width to height, such as “5:4” or “16:9”. Typical aspect ratios range from 1.25 to 2.35—the higher the value, the wider or “less square” the image. See Table 2.2.

Table 2.2. Typical Aspect Ratios

Application	Aspect Ratio
SXGA	1.25 (5:4)
35mm filmstrip	1.32 (4:3)
NTSC Video / XGA	1.33 (4:3)
PAL Video / XGA	1.33 (4:3)
HDTV Video	1.78 (16:9)
Letterbox Video / “Flat”	1.89 (2048 x 1080)
Cinemascope	2.35

Although image size and aspect ratio can be adjusted using projector software, it is still ideal to use a screen with an aspect ratio that closely matches your likely source material. You can then more easily fill the screen with the image without restricting either image size or content. For example, standard video from a VCR has a 4:3 ratio (approximately) and can fill a 4:3 screen without side-to-side stretching, whereas a high-definition signal with a 16:9 aspect is largest on a 16:9 screen.

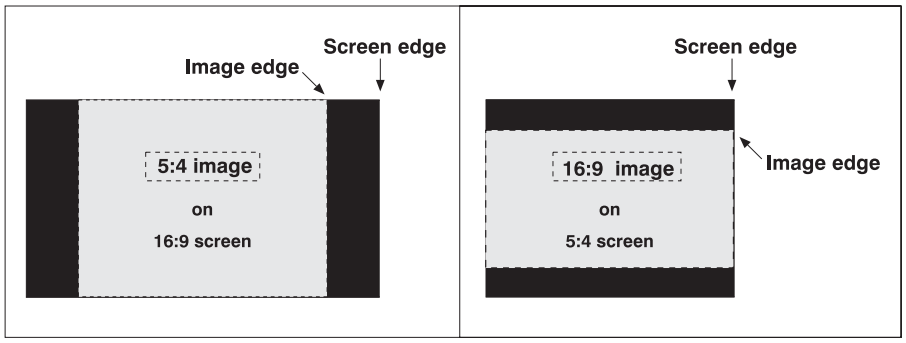

Figure 2.5. Aspect Ratios: Images vs. Screens

As shown in Figure 2.5, an obvious mismatch between source material and screen is characterized by “black bars” on both sides of the image (if the screen is wider than the source material) or above and below the image (if the source material is wider—typically called a *letterbox* display). The black bars are unused display pixels and, in most installations, are masked or hidden behind panels or curtains. Alternatively, if the area of unused pixels is considered minimal, you may prefer to use the projector’s software control to slightly stretch the image either horizontally or vertically—enough to utilize the remaining pixels while not noticeably distorting the image.

Using a Cinema “Flat” Screen (1.85 aspect ratio)

By default, source signals closely matching the projector’s 2048 x 1080 (a.k.a., 1.89) display area will fill this area accordingly. Signals with lower aspect ratios will automatically scale to be as large as possible while maintaining their original aspect ratio. For details on resizing behavior, see *3.7, Adjusting the Image*.

Displaying Both ‘Flat” and “Scope”

As an example, two standard types of displays common in theatres—flat and scope—differ in their width-to-height aspect ratio as shown below:

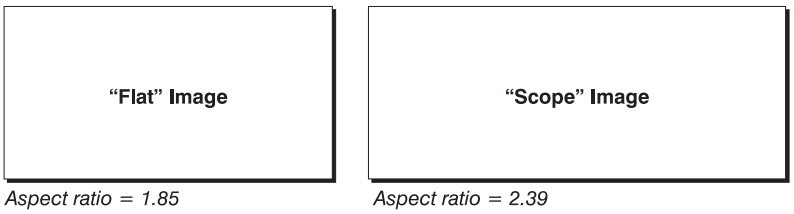

Figure 2.6. Typical Wide Formats

Achieving either of these displays from a variety of incoming source material (that may or may not be in the same format) depends on proper settings in the projector as well as certain room conditions.

Projector Variables: Electronic and Anamorphic Resizing

The native resolution of the projector (1.89) closely matches the aspect ratio of “flat” source material (1.85). Wider scope material, however, may be “squeezed”

electronically—that is, it is distorted into a narrower area (characterized by unusually thin people) so that its pixels can then be stretched horizontally through the anamorphic lens to regain the full and properly proportioned 2.39 display. This optical widening can stretch the image by approximately 25%. See Figure 2.7.

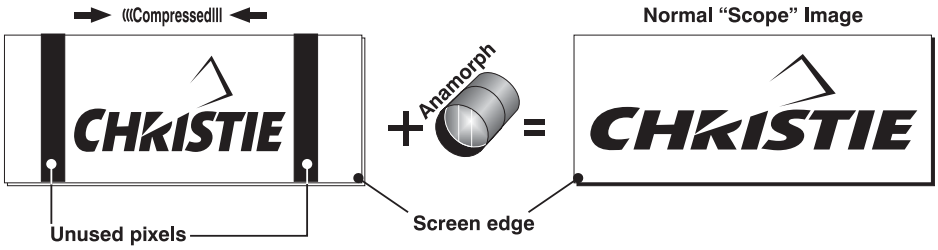

Figure 2.7. Typical Method for Achieving "Scope"

Masking Options

In order to conveniently present different types of incoming data—for example, flat vs. scope—on a single screen, you can use physical *masking* to cover the unused edge(s) of the screen. These movable panels are most commonly installed along the top edge of the screen, changing the height of the screen but not its width, and are most frequently used in permanent installations such as theatres. The screen shown in Figure 2.8 at right also has a bottom mask.

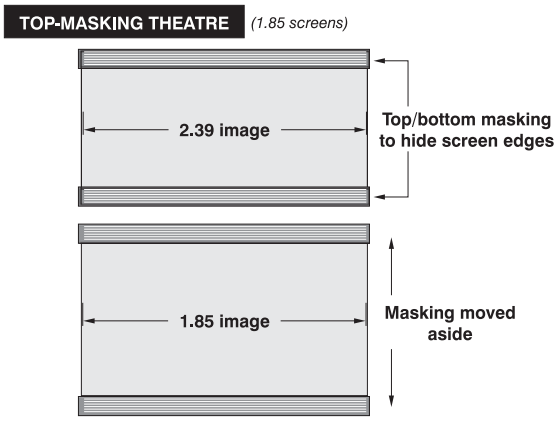

Figure 2.8. Top Masking for Scope Images

- Add masks for "scope" displays
- Remove masks for "flat" displays

Alternatively, masks may be installed at each side of the screen in order to change the width of the screen but not its height.

- Add masks for "flat" displays
- Remove masks for "scope" displays

In some cases, the room will have both side *and* top/bottom masking installed. This arrangement is the most flexible of all.

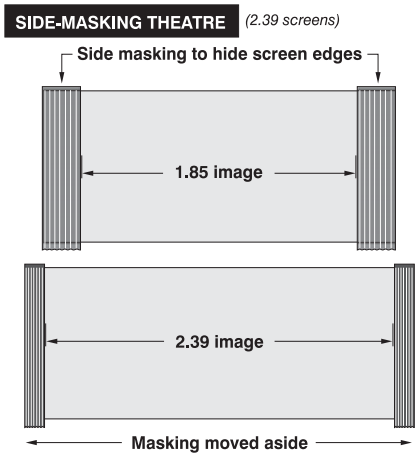

Figure 2.9. Side Masking for Flat

Refer to Figure 2.10 for a summary of the basic factors affecting wide displays in a variety of rooms.

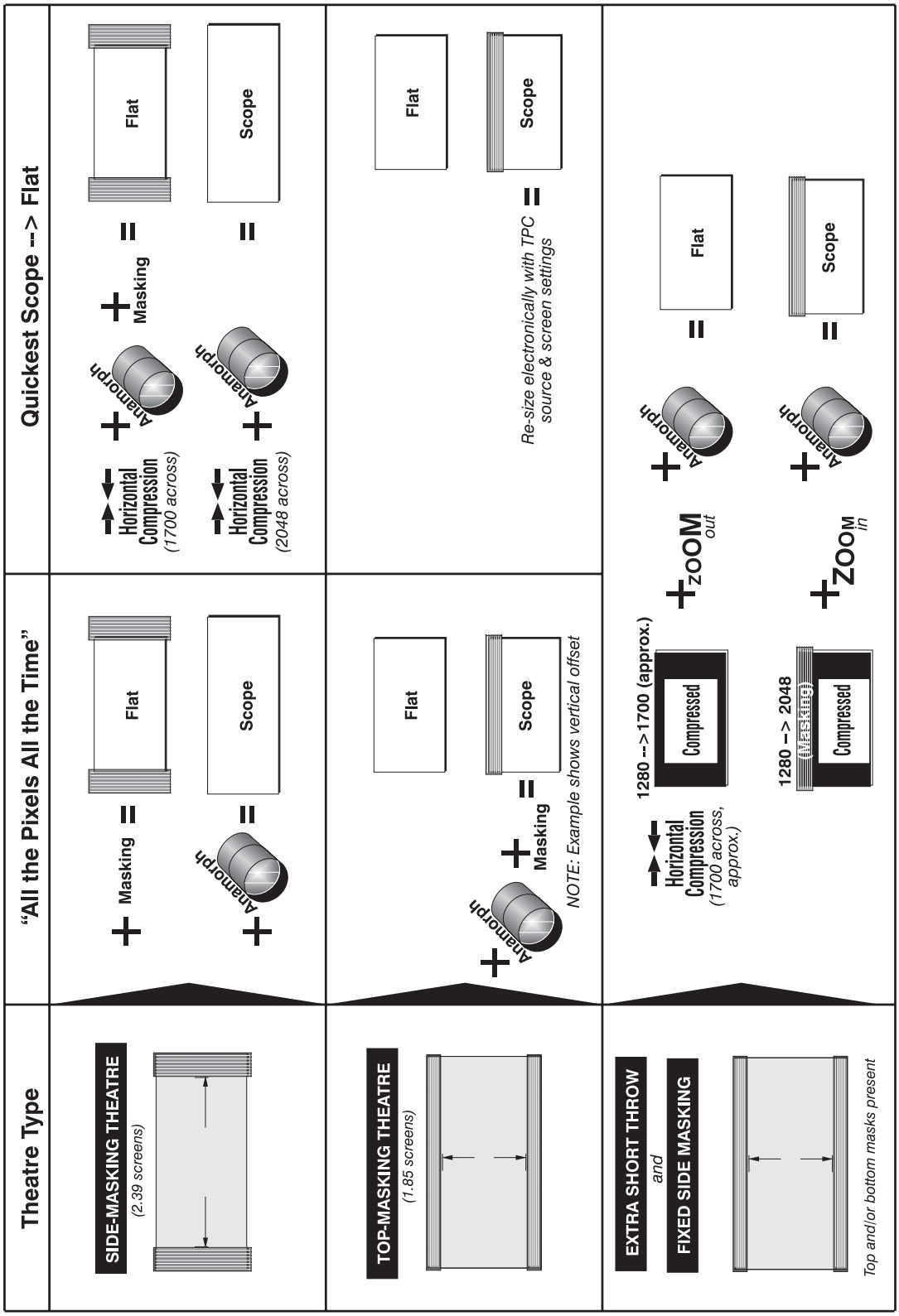

Figure 2.10. Switching Between Flat & Scope Displays

Ambient Lighting

The extraordinary brilliance of this projector is certainly well suited for locations where ambient lighting might be considered less than ideal for projection. Even a typical room or large auditorium fully lit with ceiling lights and windows rarely requires special attention. Contrast ratio in your images will be noticeably reduced only if light directly strikes the screen, such as when a shaft of light from a window or floodlight falls on the image. Images may then appear washed out and less vibrant.

In general, avoid or eliminate light sources directed at the screen.

Other Considerations

Other considerations and tips which can help improve your installation:

- Keep the ambient temperature constant and below 35°C (95°F). Keep the projector away from heating and/or air conditioning vents. Changes in temperature may cause drifts in the projector circuitry which may affect performance.
- Keep the projector away from devices which radiate electromagnetic energy such as motors and transformers. Common sources of these include slide projectors, speakers, power amplifiers, elevators, etc.
- Choose the best screen size for the application. Since more magnification reduces brightness, use a screen size appropriate for the venue but not larger than required. Installing a large screen in a small room is similar to watching television at a close range; too large a screen can overpower a room and interfere with the overall effect. A good rule of thumb is to be no closer than 1.5 times the width of the screen.

2.3 Projector Position and Mounting

Installation type, the available screen, and ambient lighting all affect where the projector should be positioned. In addition, both throw distance (the distance between the projector and screen) and vertical position (the height of the projector in relation to the screen) must be determined for every new installation. Both depend on the screen size and lens type you are using. Make sure that the room can accommodate the required location of the projector for the chosen screen size.

Throw Distance

Throw distance is the distance between the ***projector*** and the ***screen*** (Figure 2.11). For any installation, placing the projector at an accurate throw distance is necessary in order for the image size to closely match your screen – the farther the projector is from the screen, the larger the image. With zoom lenses, you'll want to know the approximate minimum and maximum image sizes possible from a given throw distance so that the most appropriate lens is installed at the site (throw distance / screen width = throw ratio).

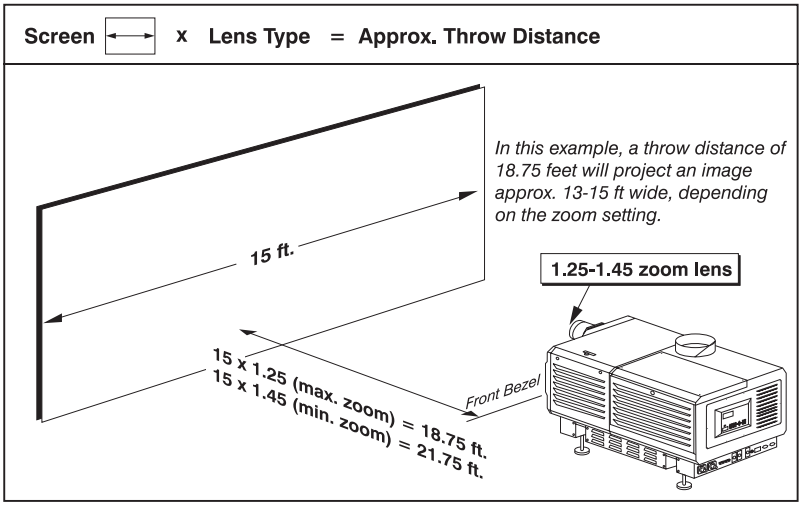

Figure 2.11. Estimating Throw Distance: Example

NOTE: If your projector is slightly tilted in relation to the screen, typical for large venues and/or elevated installations, throw distance still represents the smallest measurement between the screen and projector.

As shown in Figure 2.11, throw distance is approximately equal to the horizontal width of the screen multiplied by the type of lens you are using. For example, if you are using a 1:1 lens, proper throw distance will be approximately the same as screen width. Once you know your screen width and lens you can estimate throw distance needed. Or, if you know throw distance, you can determine what images sizes are possible with a given zoom lens.

IMPORTANT: For proper placement in any installation, use the throw distance formula provided for your lens (Appendix D). In addition, please keep in mind that due to lens manufacturing tolerances for lens focal length, actual throw distance can vary ±5% or more between lenses described as having the same throw ratio.

For complete throw distance information, consult *Appendix D*.

Vertical & Horizontal Position

Refer to the offsets shown here for help in determining how high or low to install the projector in relation to the center of the screen, and/or how far off to one side.

VERTICAL POSITION describes the elevation of the projector in relation to the screen. For many typical rental/staging installations, the projector will be above screen center. An ideal vertical position helps ensure that images will be accurately rectangular in shape rather than distorted into a keystoned shape with non-parallel sides, and that image focus and brightness both remain optimized.

NOTE: Proper vertical position is recommended, although vertically keystoned images (i.e., those with sloping sides) can be corrected in software. See ***Section 3****.*

Vertical position of the image can be manually offset—that is, placed higher or lower in relation to lens center—using the vertical offset knob on the lens mount. Starting with no offset, the 2048 x 1080 image from this projector can be moved by a maximum distance of 540 pixels, resulting in all of the image displayed above or below lens center (Figure 2.12).

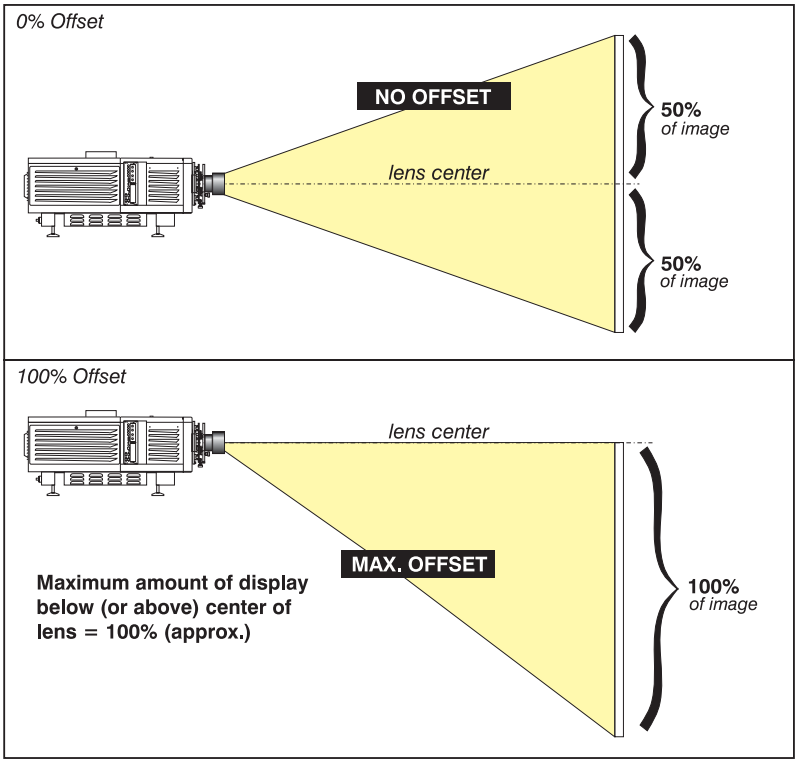

Figure 2.12. Vertical Offset Range

NOTES: ***1)*** *Assumes full 2048 x 1080 display.* ***2)*** *Recommended offset range can sometimes be exceeded, however this may affect image quality.* ***3)*** *Due to manufacturing tolerances, an offset range can vary ±5% or more between lenses described as having the same throw ratio, between projectors, and with any lens/projector combination.* ***4)*** *Simultaneous horizontal and vertical offset can limit the adjustment range of each, as can long throw distances.*

ALTERNATIVE METHOD OF DESCRIBING VERTICAL OFFSET: Offset can also be specified as the *distance traveled* from lens center (such as 270 pixels) and expressed as a percentage (270 pixels=50%) of *half of the image height*. This concept of image movement is illustrated in the example below:

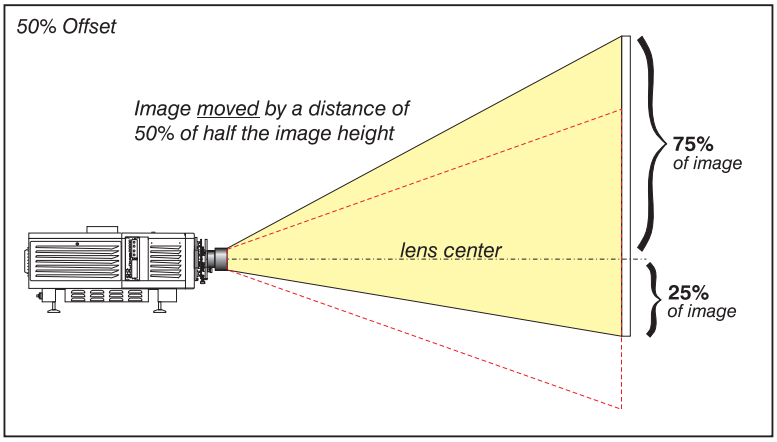

Figure 2.13. Example of Alternative Offset Specification

For any projector, if you find that you cannot raise or lower the image enough using mechanical vertical offset, try adjusting *V-Position* in the *Size and Position* menu

when displaying at less than the minimum size (see *3.7, Adjusting the Image)*. If images remain keystoned or exhibit uneven brightness, the projector may simply be too high or low in relation to the screen. Relocate for optimized performance.

THE HORIZONTAL POSITION of the image can be manually offset—that is, shifted left or right of lens center—by using the horizontal offset knob on the lens mount. Starting with no offset, the 2048 x 1080 image from this projector can be moved by a distance of 410 pixels, resulting in up to 70% of the image displayed on one side of lens center (Figure 2.14).

Note that the positioning shown at right is often mistakenly referenced as "70% offset" but it ***is not***—it is 40% offset derived as 410/1024 x 100. A 70% offset is explained below and shown in Figure 2.15.

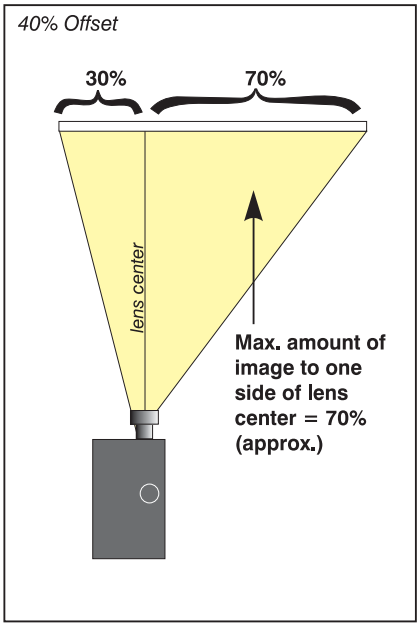

Figure 2.14. Horizontal Offset Range

ALTERNATIVE METHOD OF DESCRIBING HORIZONTAL OFFSET: Horizontal offset can also be specified as the *distance* traveled from lens center and expressed as a percentage of *half of the image width*. For example, an offset spec of 70% means a centered image can be moved by a distance of 717 pixels, resulting in 85% of the image projected to one side of lens center and 15% on the other. See right.

NOTE: Example only. Beyond range for this projector.

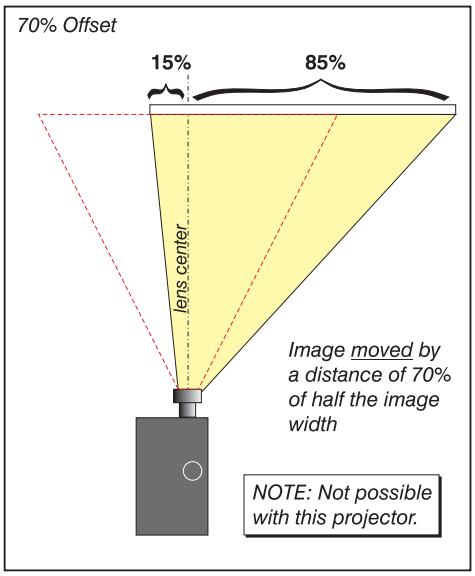

Figure 2.15. Alternative Offset Specification

Floor Mounting and Leveling

For front projection without suspending, mount the projector on a strong supporting structure or cart. Take special care if using a mobile cart—avoid sudden stops, force and uneven surfaces that may cause the top-heavy cart to lurch and overturn.

Make sure your mounting structure is reasonably level, then adjust one or more projector feet as necessary to fine-tune.

⚠ WARNING ⚠
Do not invert this projector.

Adjusting the Feet

For installations on a floor or suitable supporting structure, a single projection head should rest firmly on its feet. There is no need for the FredFrame™ unless stacking with another *Roadie 25K*, or unless you decide to rig and fly the projector.

To adjust the height and level of the projector, extend or retract the feet by rotating them.

See Figure 2.16.

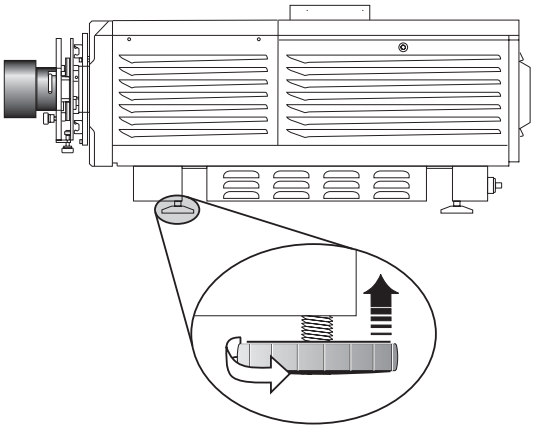

Figure 2.16. Adjusting the Feet

Tilting and Special Orientations

Tilting

For any installation, you can tilt the front end of the projector up or down as much as 15° (see right).

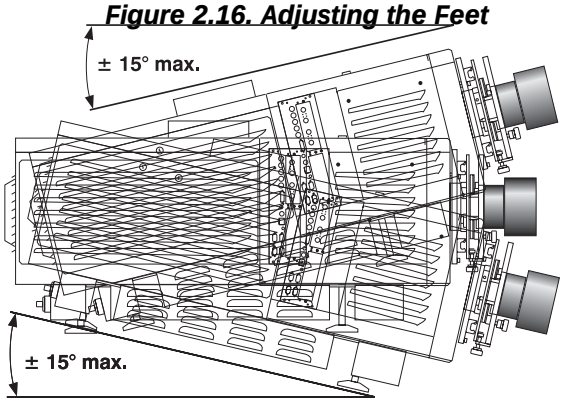

Likewise, side-to-side tilt must not exceed 15° (see Figure 2.17 below). This limit ensures safe lamp operation and proper position of the liquid cooling reservoir in the projector.

⚠ WARNING ⚠
Tilt only as shown.

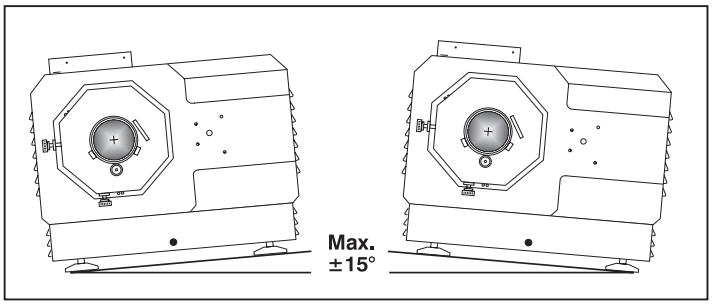

Figure 2.17. Side-to-Side Tilt

Special Orientations

Since this projector cannot be inverted or tilted beyond 15°, all installations are front-mount and require the “Front” Image Orientation setting in the *Configuration* menu.

Hoisting and Stacking

For most installations, you will likely have to safely lift or hoist this projector—or a stack of 2 projectors—into place. Keep in mind the following ***critical safety*** guidelines for all handling of the projector.

⚠ Carrying/Moving the Projection Head

Four or more people can lift and hand-carry ***one*** projection head (with or without a FredFrame™) a short distance as required. Never attempt to carry a stack by hand. To use equipment to move the projection head, always install a FredFrame™ first.

⚠ Using a Fork Lift

⚠ WARNING ⚠

Do not attempt to use a fork lift without first installing the fork lift rails on the bottom of the FredFrame™, otherwise the base of the projector may crush and damage internal components.

Strong extruded rails that mount to the bottom of the FredFrame™ accommodate forks from a fork lift, and are mandatory for this method of transport. Do not lift the projection head with equipment unless the FredFrame™ and forklift rails are installed.

⚠ Using the FredFrame™

To hoist, stack and/or "fly" projectors, you must properly secure each projection head within a FredFrame™ and use appropriate rigging and safety cables to raise and/or suspend this assembly. If desired, the lamp ballast can also be hoisted and flown from its integral rigging bars. Follow the instructions provided with the FredFrame kit.

⚠ WARNINGS ⚠

- **Use straps and/or cabling with load capacity adequate for the total projection head and frame weight.**
- **Remove the lens before hoisting.**

NOTE: Never exceed the ***Load Rating*** *specified in the* *FredFrame™ Stacking & Rigging Kit* *instructions.* ***Critical safety.***

⚠ WARNING ⚠

Use straps or cabling with load capacity adequate for the projector/frame weight.

Refer to the complete instructions for using the FredFrame™. These include all installation instructions as well as mechanical adjustment procedures for proper image alignment.

⚠ Stacking

To stack two projection heads together, you must first secure each head within a FredFrame™, then secure all corners of the frames together using 4 stacking pins (provided). You must also use the *Roadie 25K Exhaust Adapter* to route exhaust air from the bottom projector away from the top projector (not required with a side-by-side projector row). Do not stack more than 2 projection heads together, and do not attempt to move stacked projectors without proper transport equipment.

2.4 Installing a Lens, Lamp & Cooling

Before or after you have positioned the projector in its permanent or temporary location, install the remaining components: the lens, lamp and external extractor fan.

Install Lens(es)

Primary Lens

1. Orient your primary lens with its **UP** label at the top (see right). Fully insert it straight into the lens mount opening *all the way back without turning*.

   With the lens fully back, it will seat properly within the lens mount.
2. Lock the lens assembly in place with lens clamp DOWN.
3. Secure lens safety ring, and tether to projector (not required if projector is floor-mounted).

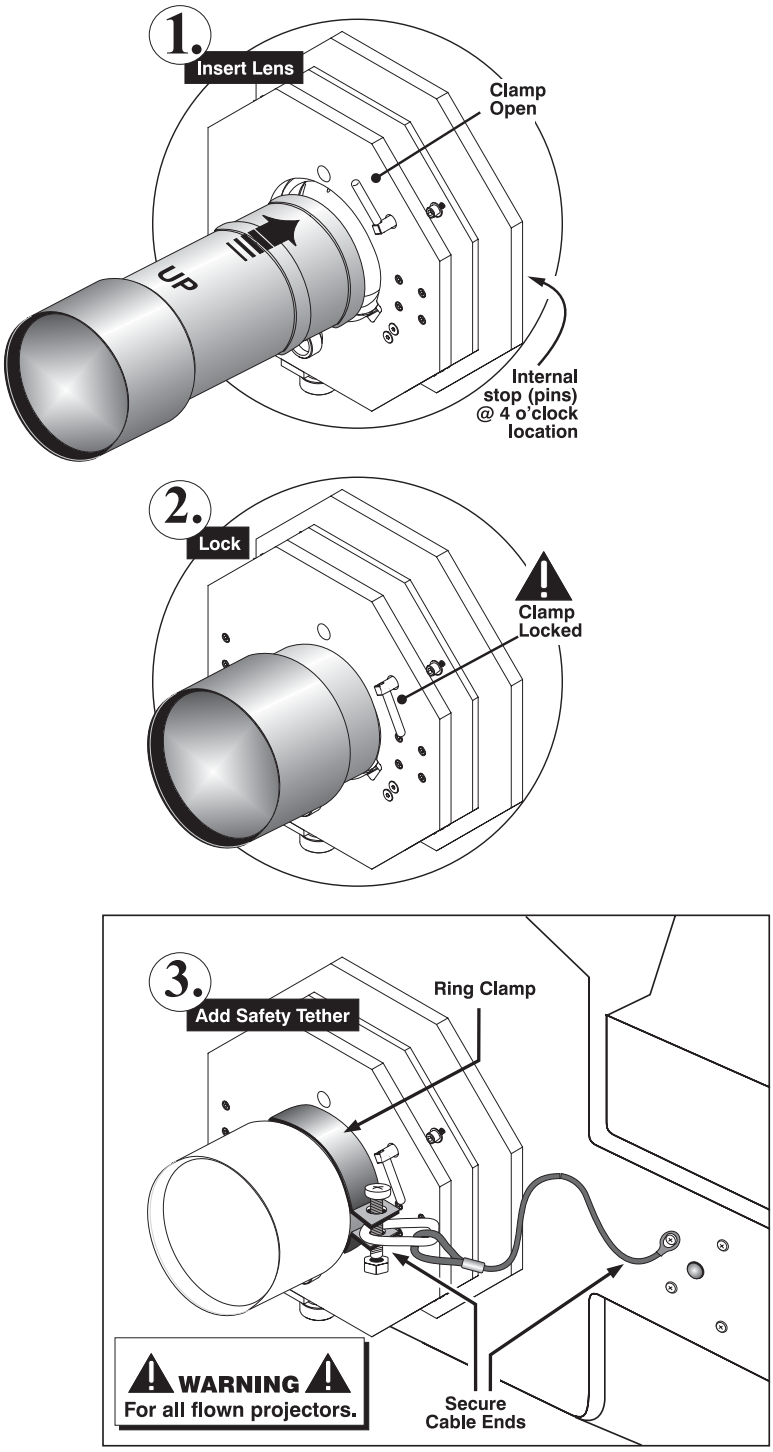

Figure 2.18. Install the Lens

NOTES: ***1)*** *The lens seals the projection head, preventing contaminants from entering the area of main electronics. Never attempt to operate the projector without a lens installed. During transport and installation, install a lens plug.* ***2)*** *Always re-install a lens in its previous "UP" orientation, otherwise boresight may require re-adjustment.*

Anamorphic Lens Installation (OPTIONAL)

NOTE: The optional anamorphic lens mount is required for use of the 1.25x anamorphic lens, producing 2.39:1"scope" images.

If the anamorphic lens will be used, it is recommended that you add the lens—and its mount—before final leveling, boresight adjustment and the like. Install only for those installations requiring full-size 2.39:1 "scope" display (mostly side-masking screens) obtained by optically stretching a pre-squeezed image.

1. **INSTALL THE ANAMORPHIC LENS MOUNT ON THE PROJECTOR:** At the front of the projector, install the anamorphic lens mount hardware as described in the instructions provided with Christie's *Anamorphic Lens Mount Kit*.

2. **INSTALL THE 1:25x ANAMORPHIC LENS:** Clamp the 1.25x anamorphic lens mount in place, following the instructions provided with the anamorphic lens mount kit.

Install First Lamp

WARNING

Protective gear required.
Qualified service technician required.

Remove the lamp door and open the empty lamp cooling compartment.

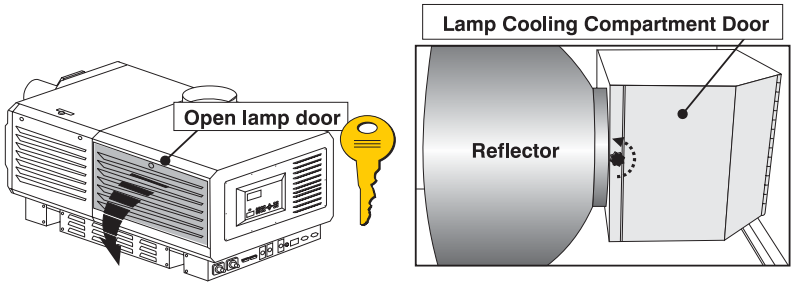

Figure 2.19. Open Lamp Door and Cooling Compartment

Install one of the following lamps in the projection head, depending on your model and site:

Single-or-3-Phase Ballast	*3-Phase Ballast Required*
2.0 kW *	4.5 kW **
3.0 kW **	6.0 kW **

** For this projector, the 2.0 kW is available in CDXL (maximum performance) only*

*** Available as CDXL (maximum performance) or original CXL (less expensive). Refer to full specifications in Section 6.*

1. Check lamp cradle (anode end) location for your lamp

- For 4.5 or 6.0 kW lamps, the lamp cradle must be as far forward as possible (factory default).
- For 2.0 or 3.0 kW lamps, move the cradle to the rear position, i.e., approximately 1” closer to the reflector.

2. Install Lamp

See *6.4, Replacing the Lamp & Filter*, Steps 7-11. Observe all warnings, and wear protective clothing and shielding.

Don’t forget to properly mark the “Lamp Installed” label on the lamp door to indicate current lamp size.

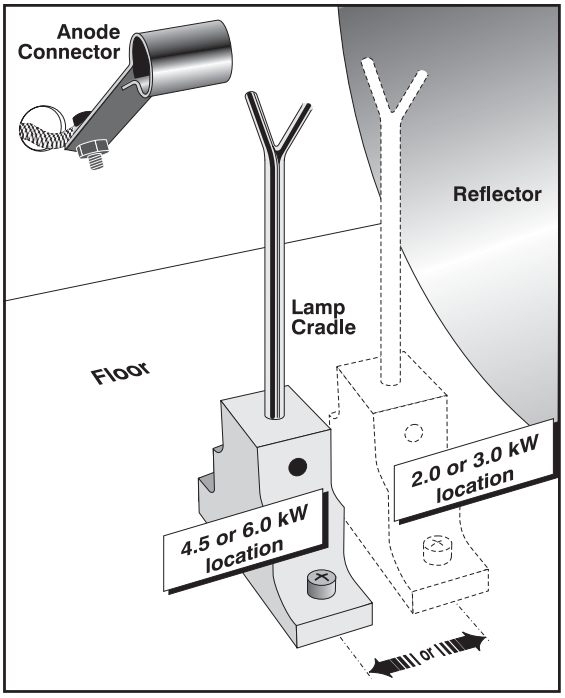

Figure 2.20. Move cradle back for 2.0 or 3.0

Cooling

Extractor Fan and Duct

For any *Roadie 25K* with any lamp, install the Christie extractor fan and duct to pull warm exhaust air from the projector at a minimum rate of 600 CFM. Use either the 6-in. or the 6-ft. duct in one of the configurations shown below:

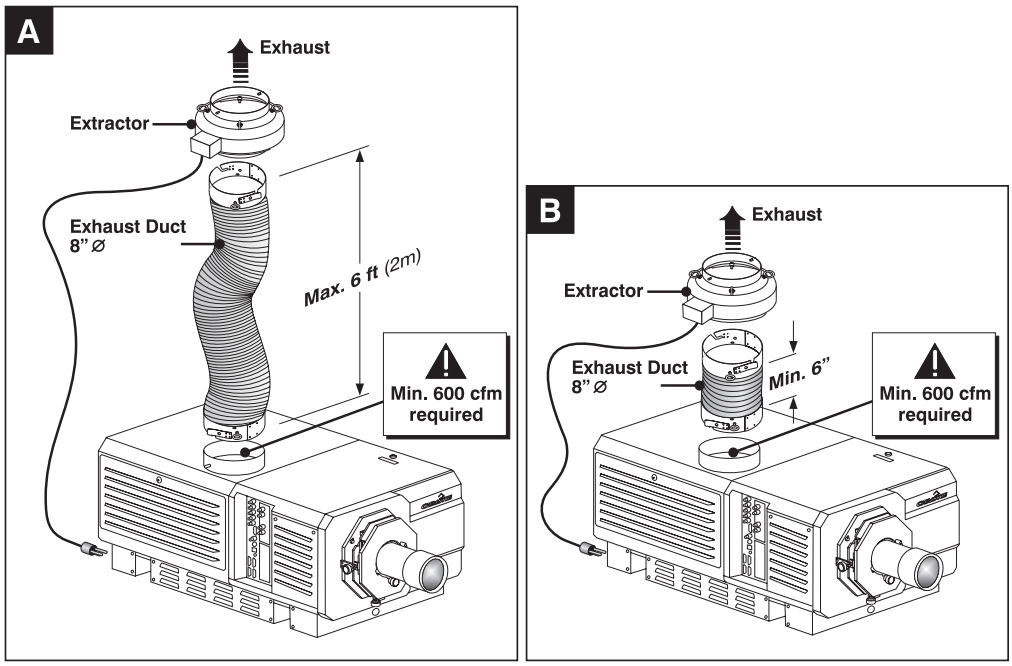

Figure 2.21. Extractor Fan Configurations
(MANDATORY SAFETY CABLING NOT SHOWN)

Direct exhaust as necessary to keep ambient air temperature within operating spec (see *Section 6, Specifications*). If the projector is used for extended periods, particularly in a confined space, routing to the outside of the building may be required. In all cases, maintain at least 600 CFM at the projector's top exit port:

Table 2.3. Airflow Requirements

Lamp (kW)	Minimum Exhaust Airflow Rate
2.0	600 ft^3/min.
3.0	600 ft^3/min.
4.5	600 ft^3/min.
6.0	600 ft^3/min.

INSTALLATION: Follow the installation guidelines provided below, securing all components in the order that best suits your site and installation requirements.

⚠ WARNING ⚠

Do not operate the projector without the Christie Extractor components installed.

1. **INSTALL DUCT ON PROJECTOR:** See Figure 2.23 below. Align either the 6-inch or 6-foot duct at the projector's top exit port, twisting to secure "flaps" over projector pins. Confirm that 1) there are no obstructions or "kinks" within the ducting, 2) all air intake areas of the projector are clear and exposed, and 3) the vane switch at the exit duct moves freely.

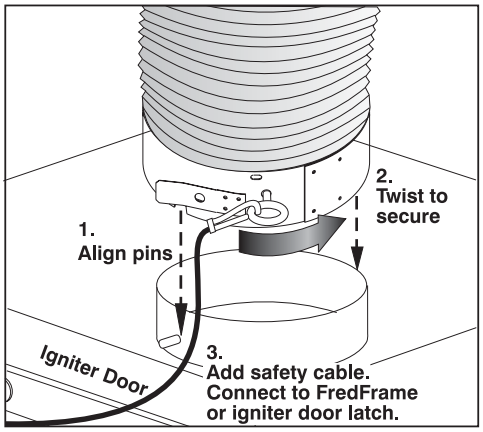

Figure 2.22. Securing Extractor to Duct

2. **ADD EXTRACTOR:** See Figure 2.22. Connect the other end of the duct to the Christie heat extractor/blower, twisting to secure "flaps" over pins on the fan. Make sure that the ***grille*** end of the fan faces ***down***. For longer exhaust runs at your site, add extractors/boosters as necessary—the vane switch at the projector's top exit port will trigger a projector shutdown if the airflow is inadequate. To prevent possible transfer of fan vibration to the image, do not mount the extractor directly on the projector—include at least 6" of duct.

⚠ IMPORTANT ⚠
Do not exceed 6-ft. duct length without adding additional extractors.

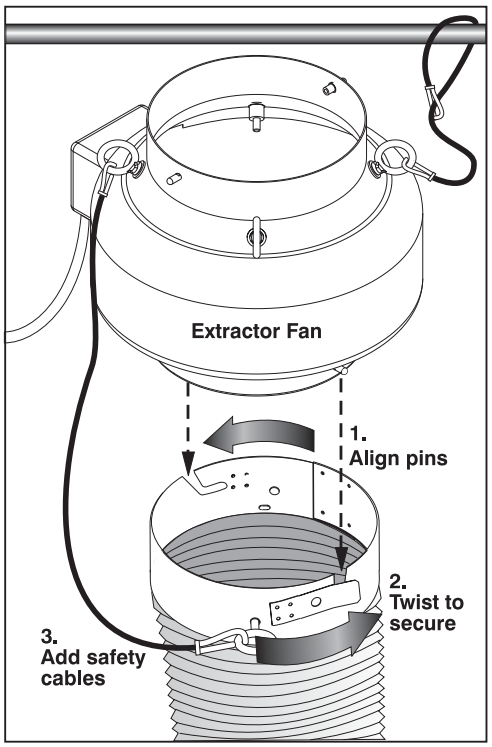

Figure 2.23. Securing Duct to Projector

3. To suspend the projector/fan assembly, always use appropriate rigging hardware and secure to adequate support structures at your site.

   The Christie 6-ft. duct-with-fan weighs approximately 22 lb.

   The Christie 6-in. duct-with-fan weighs approximately 15 lb.

Use third-party extractors only if the minimum of 600 CFM airflow can be maintained.

4. **SECURE SAFETY CABLES:** Three safety cables are provided, and are all mandatory whenever the fan/duct assembly is suspended. These cables prevent components from falling if your rigging equipment fails. Figure 2.24 shows the safety cable required between the cooling assembly and projector in any installation, flown or not. Attach remaining safety cables between the 1) duct and fan, and 2) fan and supporting structure.

⚠ WARNINGS ⚠

- **Always use a safety cable between projector and duct/fan**
- **Minimum of 3 cables required for 6’ duct and/or any flown installation**
- **Minimum of 1 cable required for floor-mount with 6” duct.**

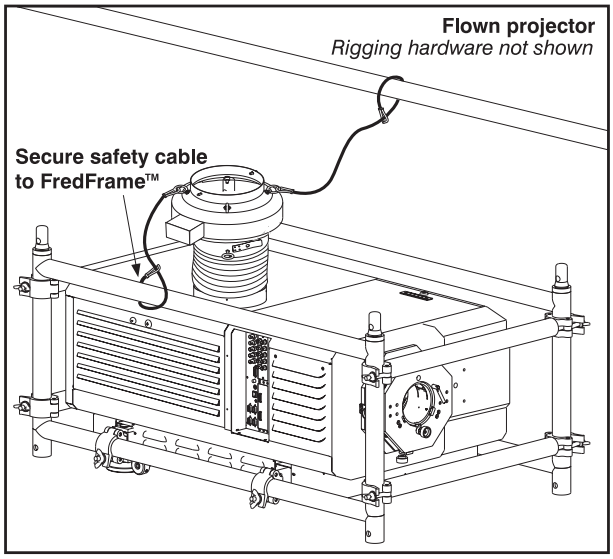

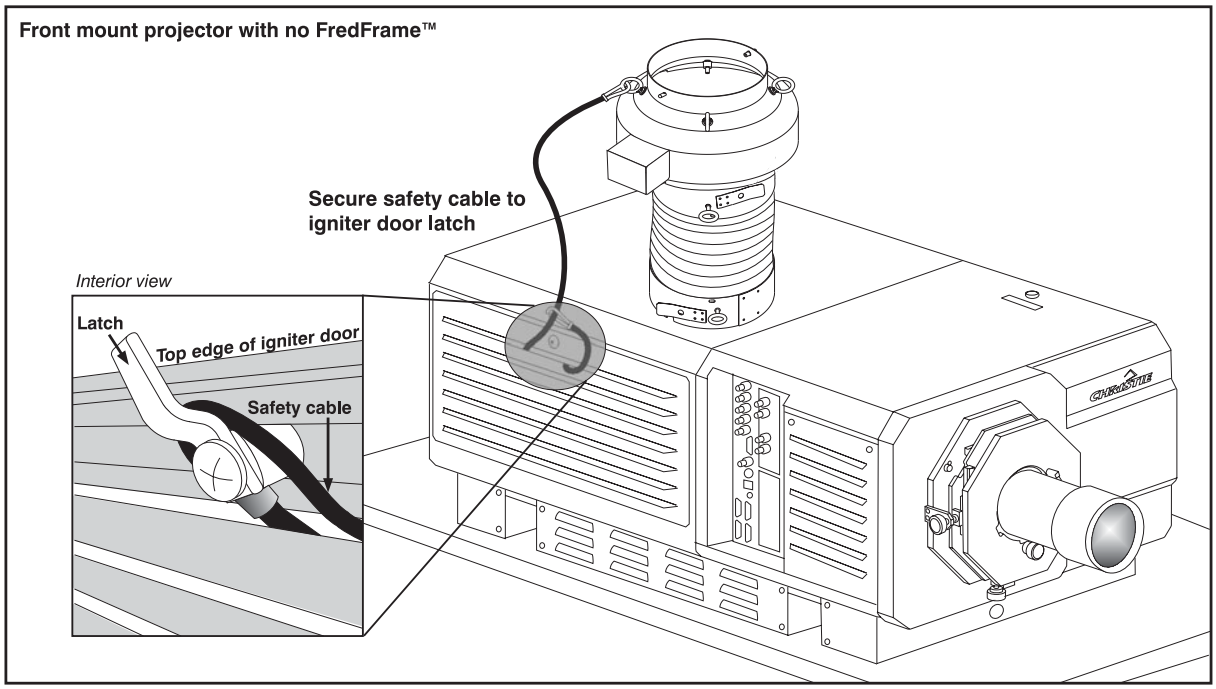

Figure 2.24. Safety Cable at Projector—Flown or Front Mount

5. **CONNECT TO POWER:** Connect the line cord of the extractor fan to the “Extractor Fan” outlet on the rear panel of the projector. Use appropriate extension cords if necessary. The fan will power-up with the projection head, and will run for a 10 minute cool-down period after the projection head is powered off.

CALCULATE CFM in 8" DUCT: Use an air flow meter to measure the ft/min or ft/sec where the duct connects to the projector (measure ***at this end only***). Then multiply the reading by the cross-sectional area of the 8" duct (0.34) to calculate the cubic feet/min airflow. The formula is:

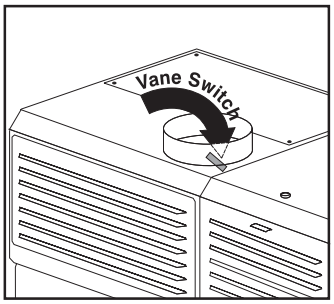

Measured linear ft/min x 0.34 = CFM

NOTE: If the duct becomes significantly blocked—or if a fan fails—the projector should trigger an error message before becoming overheated or unsafe. Regardless, ***check airflow regularly****.*

⚠ WARNING ⚠

Never disable a vane switch. Attempting to operate the projector without monitoring airflow can result in dangerous overheating of the projector.

Side-Venting Duct (Adapter)

NOTE: Available early 2005.

All stacks require a special side-venting duct adapter between projectors, otherwise the top projector blocks exhaust from the top of the bottom projector. This *Roadie 25K Exhaust Adapter Kit* is required on any bottom projector in an upright stack of two.

Liquid Cooling

During operation, a closed loop of flexible tubing circulates liquid coolant from a small reservoir to critical electronic components located near the front of the projection head. The coolant (a 50/50 mix of distilled water and ethylene glycol) should fill slightly more than half of the reservoir to ensure adequate circulation. The reservoir, which is located in the igniter compartment, is factory-filled and does not require draining for transit. Check regularly.

2.5 Connecting Sources

Sources connect to the *Input Panel* located on side of the projector closest to the lens. See Figure 2.25.

The upper left corner (**INPUT 1**) typically accepts an *RGB signal* from an external analog RGB source, or it can also be used for YPbPr signals. Just beneath these BNCs, the DVI-I connector (**INPUT 2**) accepts digital or analog display signals from a computer. Connect analog *composite video* at **INPUT 3** or *S-video* at **INPUT 4** from devices such as VCRs, laser disk players or DVD players. At **INPUT 5**, connect serial digital YCbCr (4:2:2) or compatible SMPTE signals (note this module can be moved to **INPUT 6** if desired).

There are also several optional interfaces available for connecting other sources—these interfaces slide into the remaining unused option slot, and can be removed or installed while the projector is running.

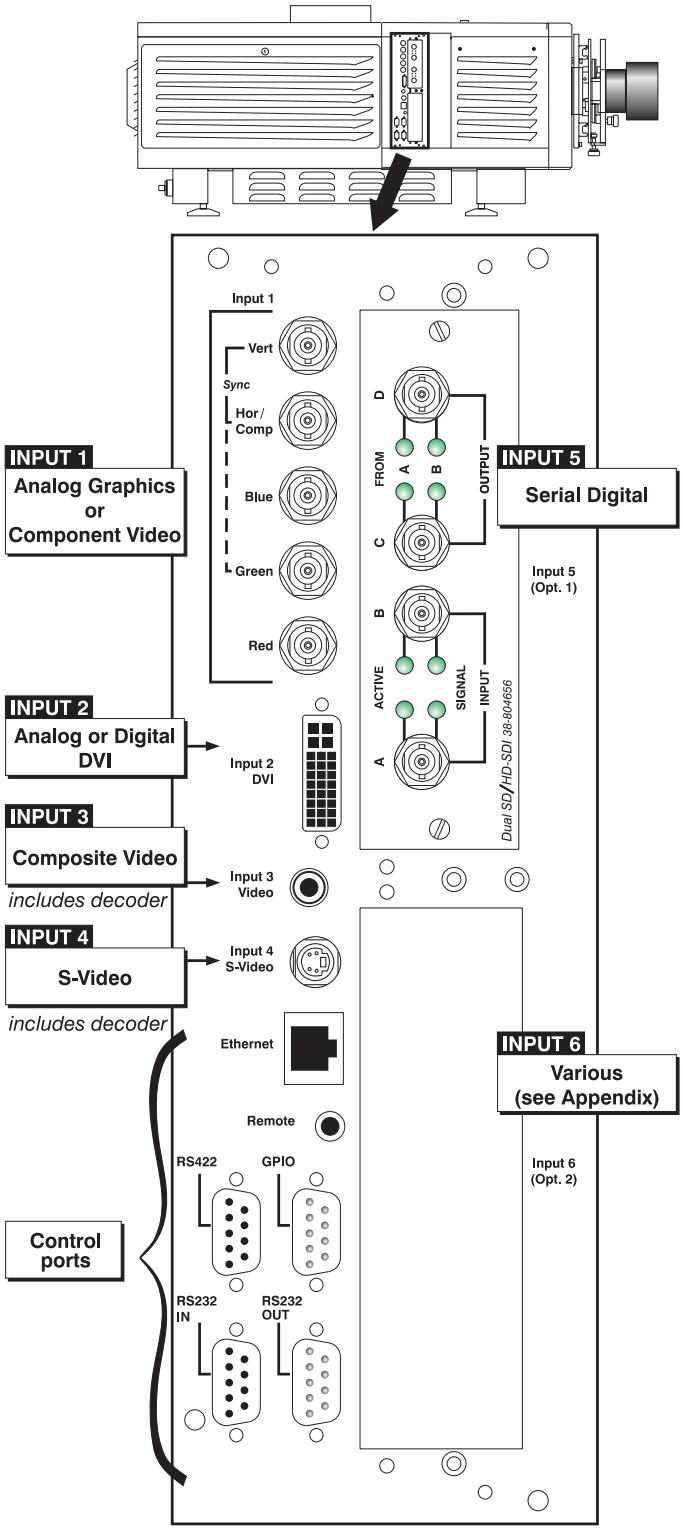

Figure 2.25. Roadie 25K Input Panel

NOTES: ***1)*** *See* ***Section 6, Specifications*** *for details regarding compatible inputs.* ***2)*** *Use high quality shielded cables only for all connections.* ***3)*** *The* ***Dual SD/HD-SDI*** *module shown will be available in 2005 (standard).*

RGB Signals

INPUT 1 consists of 5 BNCs (connectors) for linking to a variety of sources. The typical connection would be to an RGB source such as a PC, Mac, DEC, Sun, SGI and others. This projector supports multiple sync types with RGB signals: sync-on-green, composite sync, and separate H & V syncs.

NOTE: Depending on your source, you may need a custom adapter cable with BNC connectors at the projector end and a different type of connector at the other (such as a 15-pin "D" connector for some computer sources). Contact your dealer for details.

Connect the **SYNC** BNC input(s). Then connect the red, green and blue source outputs to the **RED**, **GREEN**, and **BLUE** BNCs on the **INPUT 1** panel. If the source uses sync-on-green, only the red, green, and blue connections are required. If the source provides a composite sync output, connect it to the **SYNC** input labeled **HOR/COMP**. If the source provides separate horizontal and vertical sync outputs, connect horizontal sync to the **SYNC** input labeled **HOR/COMP** and connect vertical sync to **SYNC** input labeled **VERT.** See Figure 2.26.

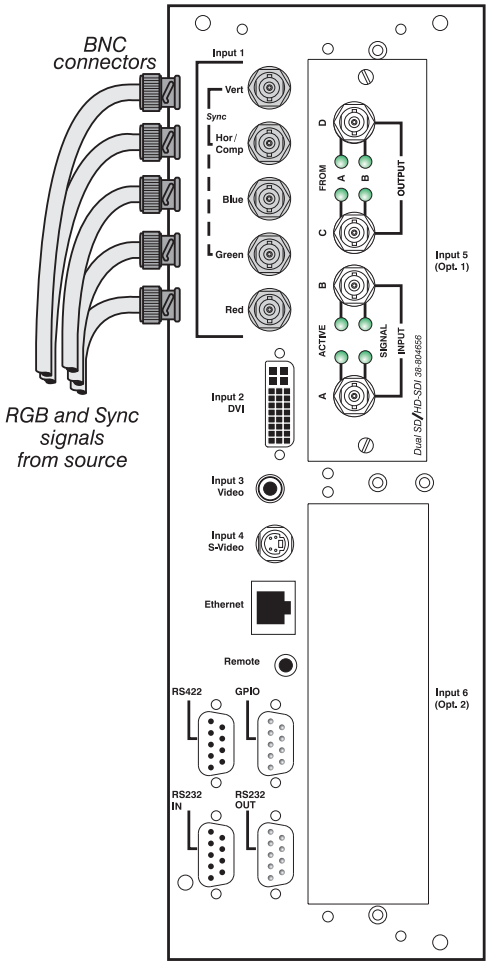

Figure 2.26. Connecting an RGB Source

NOTES: ***1)*** *If for some reason the projector fails to recognize a signal as an RGB signal, specify this* ***Color Space*** *option within the* ***Image Settings*** *menu. See* ***3.7, Adjusting the Image. 2)*** *To connect YPbPr signals–such as from DVDs or analog HDTV sources–to* ***INPUT 1****, use the red, green and blue BNCs as described in* ***YPbPr Signals*** *(below). 3) This input does not route to the decoder and cannot be used for Composite Video or S-Video.*

YPbPr Signals (COMPONENT VIDEO)

Connect a YPbPr signal (*component video*) to **INPUT 1** or **INPUT 2** as shown in Figure 2.27.

NOTES: ***1)*** *If, for some reason, the projector fails to recognize a YPbPr signal, specify this* ***Color Space*** *option within the* ***Image Settings*** *menu. See* ***3.7, Adjusting the Image****.* ***2)*** *Do not connect digital component signals (known as YCbCr) to* **INPUT 1** *or* **INPUT 2***. Use the appropriate optional digital interface installed in* **INPUT 5** *or* **6** *only.*

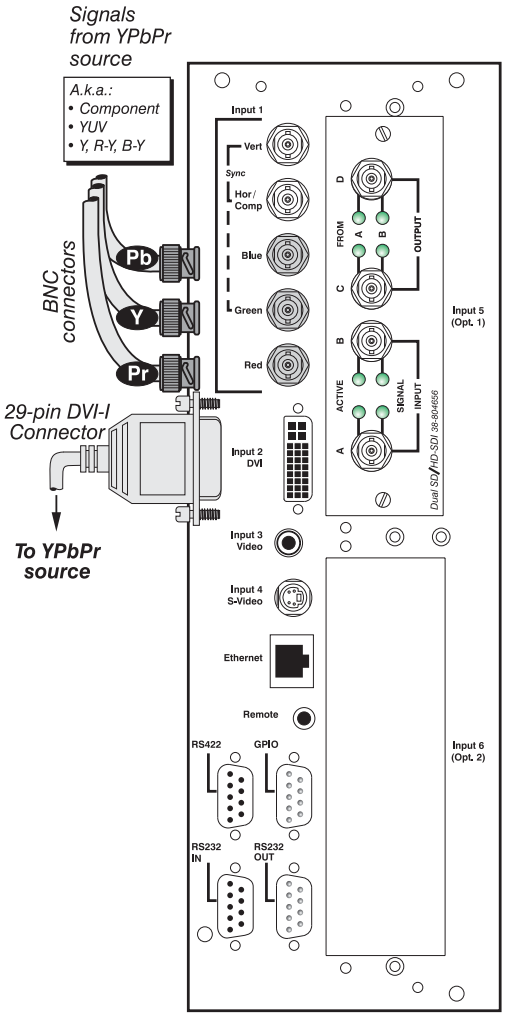

Figure 2.27. Connecting a YPbPr Source

Composite Video

INPUT 3 and **INPUT 4** provide simultaneous connection of both a composite video source (**INPUT 3**and an S-Video source (**INPUT 4**). See Figure 2.28.

NOTE: Unlike previous Christie projectors, composite video and S-Video cannot connect to any other locations on the input panel. Connect as shown at right.

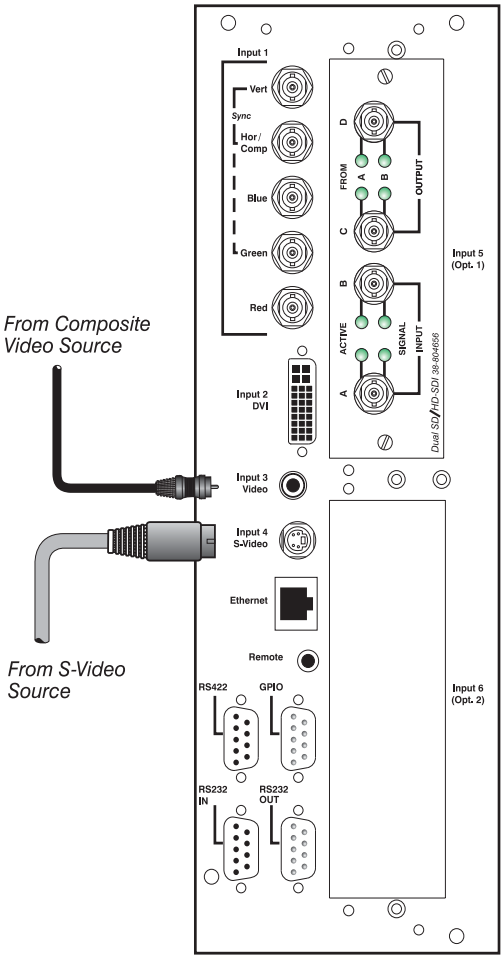

Figure 2.28. Connecting Composite Video and/or S-Video

Dual SD/HD-SDI

NOTE: Available 2005. All information here is preliminary and subject-to-change.

Christie's *Dual SD/HD-SDI* module is standard with this projector, and factory-installed in the first option slot (labeled **INPUT 5**). Its loop-through capability enables incoming serial digital data (HD format) to be tiled across multiple screens, creating vast "mega resolution" displays. Alternatively, the multiple outputs can be overlapped for extra-bright displays, or simply distributed to additional projectors for multiple screens of the same image.

The module accepts one or two independent standard- or high-definition serial digital inputs, decodes them for processing in the main electronics of the projector, and outputs 10-bit YCbCr 4:2:2 video. Either input can be set as the active primary or secondary part of a Picture-in-Picture display, and either input can be looped through to one (or both) of the module's BNC outputs.

*NOTE: Selection of these inputs is described in **3.2, Using the Keypads**.*

Connect a compatible SMPTE 292M or SMPTE 259M-C source(s) to one or both of the inputs located on the left side of the module. The module will automatically detect the standard at each input and configure itself accordingly for correct termination of the signal. The module also detects and supports dual link 292M for

SMPTE 372M video standards. For full details, consult the *Dual SD/HD-SDI* manual (available separately).

Extra Video ' Not possible. Composite and S-Video connect to **INPUT 3** and **INPUT 4** only.

Optional Inputs ' Optional input modules allow you to increase your total number of inputs and/or accommodate different signal types, whether analog or digital. Install in the areas labeled **INPUT 6** or (if available) **INPUT 5.** These interfaces include:

- RGB 500 Input Module
- RGB 400 Active Loop Thru Input Module
- RGB 400 Buffered Amplifier Input Module
- Composite/S-Video Input Module *(note: not currently supported)*
- PC250 Analog Input Module
- Serial Digital Input Module
- Digital HDTV Module *(note: discontinued)*
- DVI Input Module
- Dual SD/HD-SDI Module *(supplied as standard; available 2005)*

For even more sources, connect a 3rd-party switcher to the RS232 IN port, or, if RS422-compatible, to any of the three RS422 ports.

*NOTES:. **1)** Connect analog HDTV signals directly to **INPUT 1** or to any other "RBG" input module installed—the optional HDTV Input Module used in earlier projectors is not needed or recommended. 2**)** See **Appendix F, Optional Input Modules** for a brief description of each interface.*

2.6 Connecting Communications

As an alternative to the projector's keypad or remote, you may wish to communicate with the projector using a PC or other controller. Such a device sends commands and receives feedback via serial links (2 types), Ethernet or GPIO communications, all described below.

Remote Keypads

As desired, direct the projector's IR remote keypad towards the display screen or the projector's IR sensors. Alternatively, connect a wired (tethered) version of the remote to either the 3-pin XLR connector rear (standard) or the 3.5mm phono jack on the side of the projector, depending on which type of cable you are using with this remote. Note that response to a wired keypad must also be enabled in the *Communications* menu—see *3.8, Adjusting System Parameters and Advanced Controls* for more information.

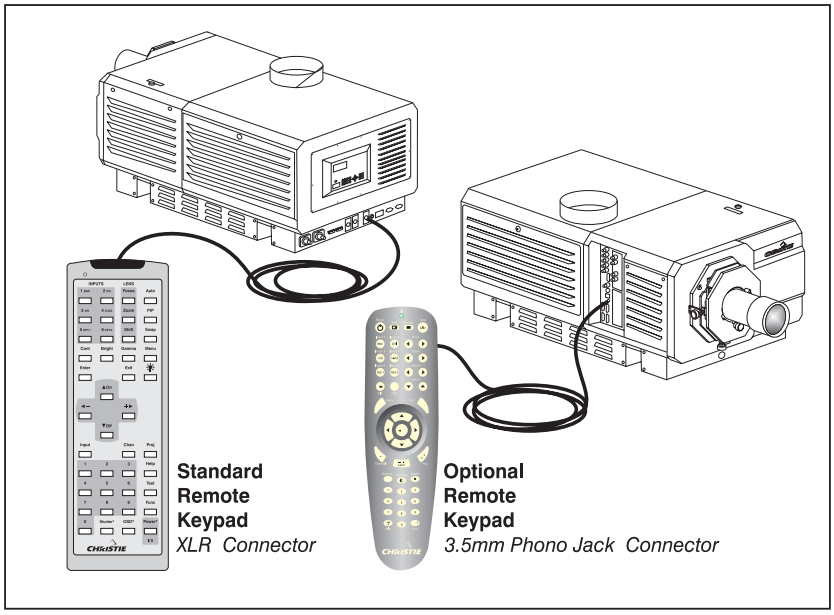

Note that if both wired remotes are connected, communications via the side input have priority over communications via the rear.

Other Controllers

RS232 Serial Communications

From most computers, connect a standard RS232 serial communication cable between the computer and the projector serial port labeled **RS232 IN**—this 9-pin connector is located on the input panel on the side of the projector. Then set the projector's baud rate to match that of the computer.

Changing the baud rate is done in the projector's *Communications* submenu. See *3.8, Adjusting System Parameters and Advanced Controls*.

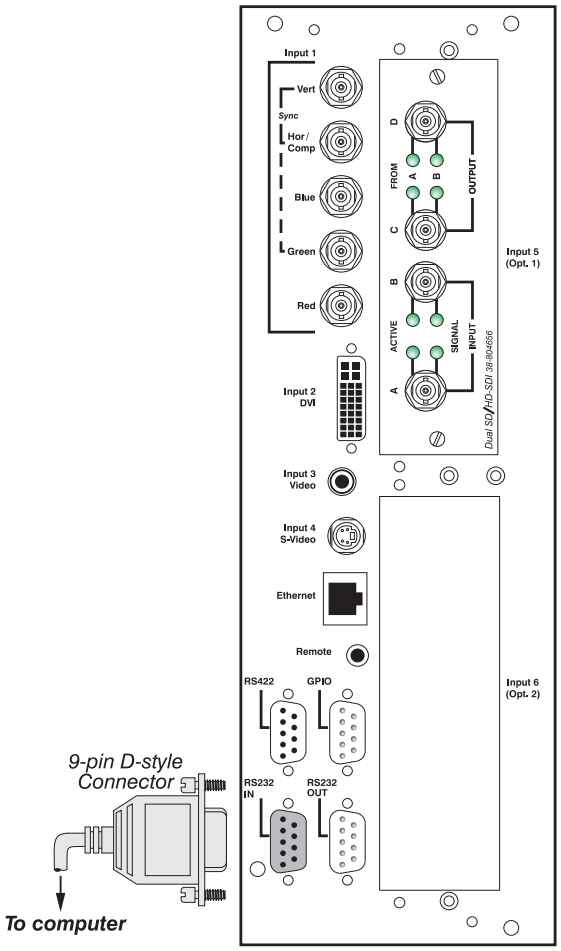

Figure 2.29. Connecting Serial Communications via RS232

RS422 Serial Communications

Some computers can provide RS422 serial communications (often through a plug-in adapter or external converter) rather than the more common RS232 standard. RS422 communication has differential "transmits-and-receives" and is generally better suited for long distances than is RS232 communication. Note that RS422 is *not* compatible with RS232—connecting a RS232-compatible PC to RS422 can damage the equipment at either end. Consult the documentation provided with your PC if your are unsure.

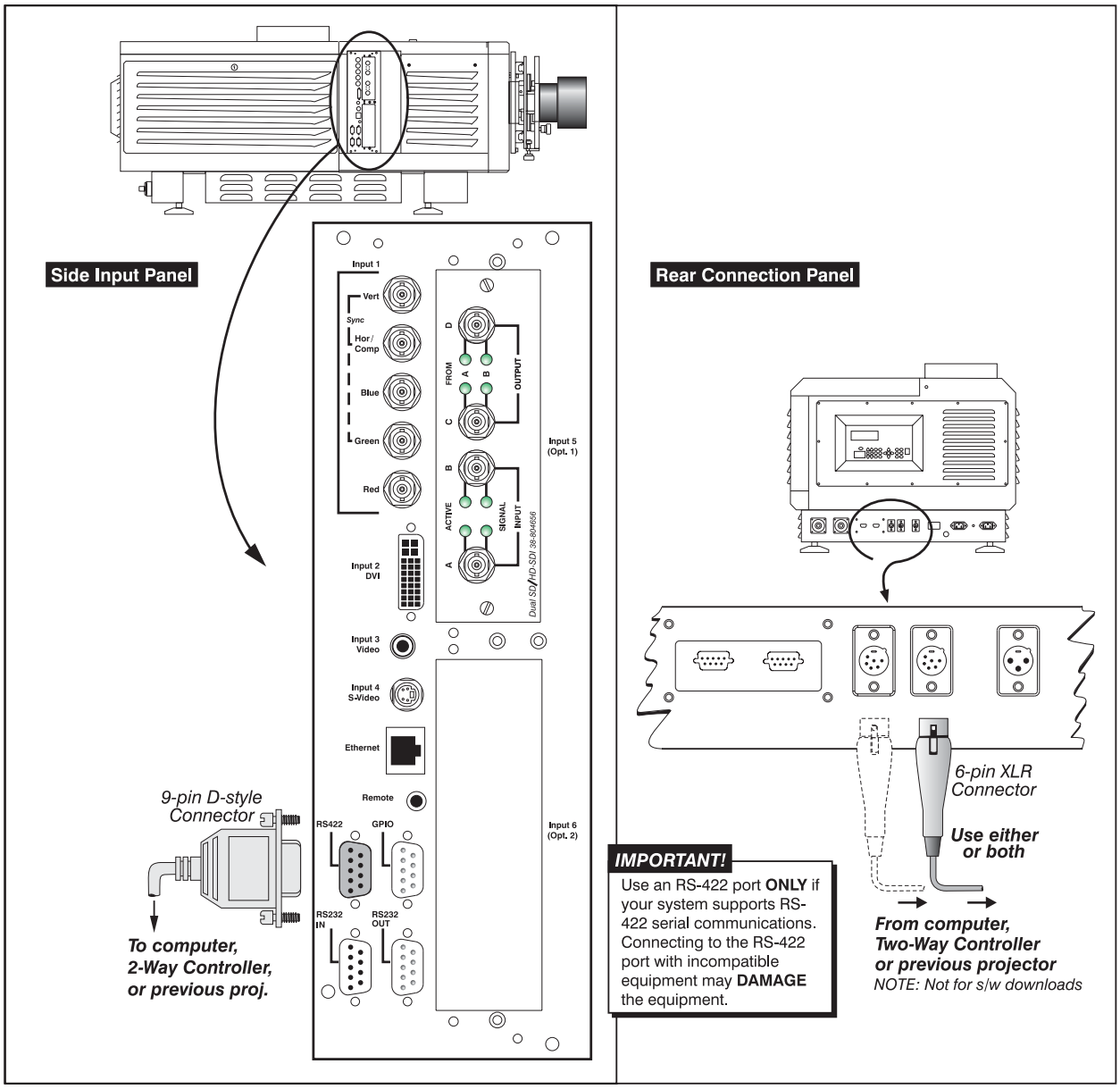

Figure 2.30. Connecting Serial Communications via RS422

There are three RS422 ports on the projector—two are 6-pin XLR ports (rear of projector) and the remaining is a 9-pin D-connector (side of projector). Use any of these ports for communications to and from an RS422-compatible controller, and/or as in-and-out ports for networking multiple projectors together on a serial network (*note there is no 9-pin "out" port*).

NOTES: ***1)*** *Do not use the rear ports for downloading main software upgrades to the projector—use the 9-pin side port only.* ***2)*** *Upon power-up of an RS422 network, wait until all projectors are initialized before sending further commands. Commands sent during initializing will be lost.*

⚠ CAUTION ⚠

Do not use an RS422 port unless you are using equipment with RS422 capability. The voltage levels of this signal can damage incompatible equipment.

Ethernet Communications

To add the projector to an existing Ethernet network with other equipment such as controllers and other projectors, connect standard CAT5 Ethernet cable between your Ethernet controller (or hub) and the Ethernet port on the side of the projector.

NOTES: ***1)*** *Ethernet crossover cable required if connecting directly to a PC only.* ***2)*** *Downloading new software to the projector via Ethernet is not supported.*

Upon connection to an Ethernet network, the projector's factory default IP address of 0.0.0.0 will automatically enable the DHCP server function (if a DHCP server is available on the network)—i.e., the projector will obtain from the DHCP server a new IP address that is valid and unique for that network. Or, if there is no DHCP server present (or if a specific static IP address for the projector is preferred or required), you can set the address in the *Ethernet Settings* menu or via an ASCII serial command.

Regardless of how it is assigned, once a projector has a valid and unique address it will respond to commands sent to this address ***after*** the next power-up. To determine the projector's current IP address, consult the *Status* or *Communications* menus.

Refer to *3.8, Adjusting System Parameters and Advanced Co*ntrols for further information about setting up and using a projector connected via Ethernet.

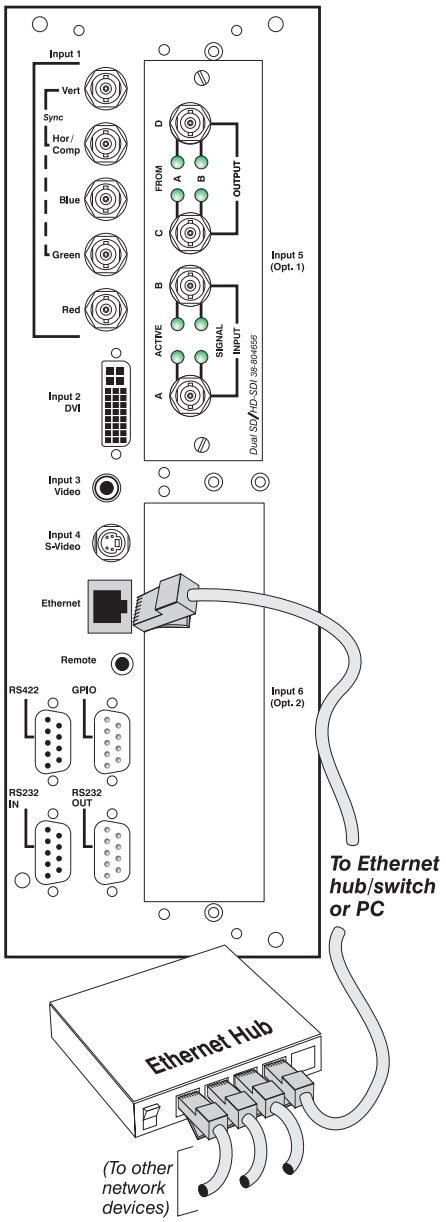

Figure 2.31. Connecting to an Ethernet Network

The GPIO Port

The General Purpose In-Out (GPIO) port enables integration of the projector within an established control system so that other devices connected via GPIO can operate in tandem with projector, or vice versa. ASCII commands sent via standard serial ports can be stored in projector memory, where they can then trigger a sequence of events in response to incoming or outgoing signals at the GPIO port, depending on your programming of the GPIO pins. For example, you can automatically dim the room lighting when the projector is turned on, or automatically turn the projector off when the lights are raised.

For more information, refer to *Appendix E*.

2.7 Connecting Multiple Projectors

You may wish to link two or more projectors together so that commands and communications to and from a controller are relayed between projectors. Choose a hardware configuration that best suits your desired communication method.

Serial Links

RS232 NETWORK: To control multiple projectors with a computer/controller having an RS232 interface, first set all projectors to the same baud rate as the controller, then chain the projectors together by connecting the **RS232 OUT** connector of the first projector (already connected to the computer/controller) to the **RS232 IN** connector of the next projector in the chain. Continue connecting projectors in this manner until you've reached the last projector in the chain, so that only the last projector has an unused **RS232 OUT** port. See Figure 2.32.

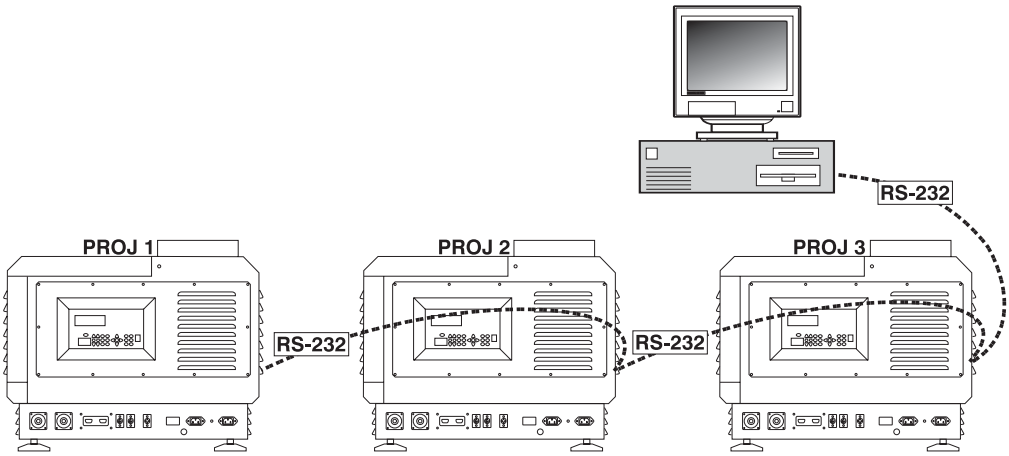

Figure 2.32. Typical RS232 Network

RS422 NETWORK: To control multiple projectors with a computer/controller having an RS422 interface, first set them all to the same baud rate as the controller, then chain the projectors together by connecting an **RS422** port of the first projector (already connected to the computer/controller) to an **RS422** port on the next projector in the chain. Use any of the three RS422 ports available on the projector—two are at the rear (6-pin XLRs), and one is on the side input panel (9-pin D-connector). Continue connecting projectors in this manner until you've reached the last projector in the chain, so that only the last projector has two unused **RS422** ports. See Figure 2.33.

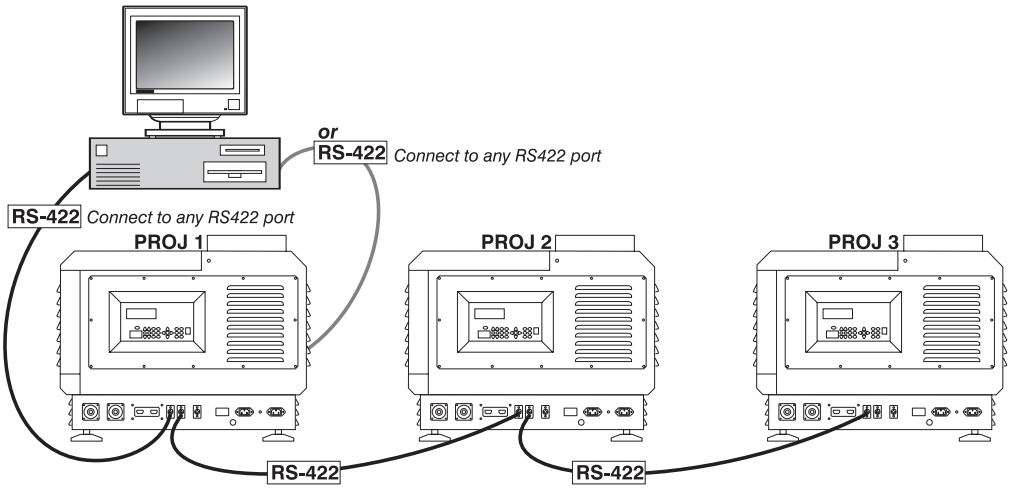

Figure 2.33. Typical RS422 Network

You can also connect by RS232 <u>or</u> RS422 (see Figure 2.34), in which case either type of serial communication must also reach the other type of port. You must enable this joining of network ports in the *Communications* menu—set the "Network Routing" option to "RS232 and RS422 Joined". Serial messages will reach all serial ports.

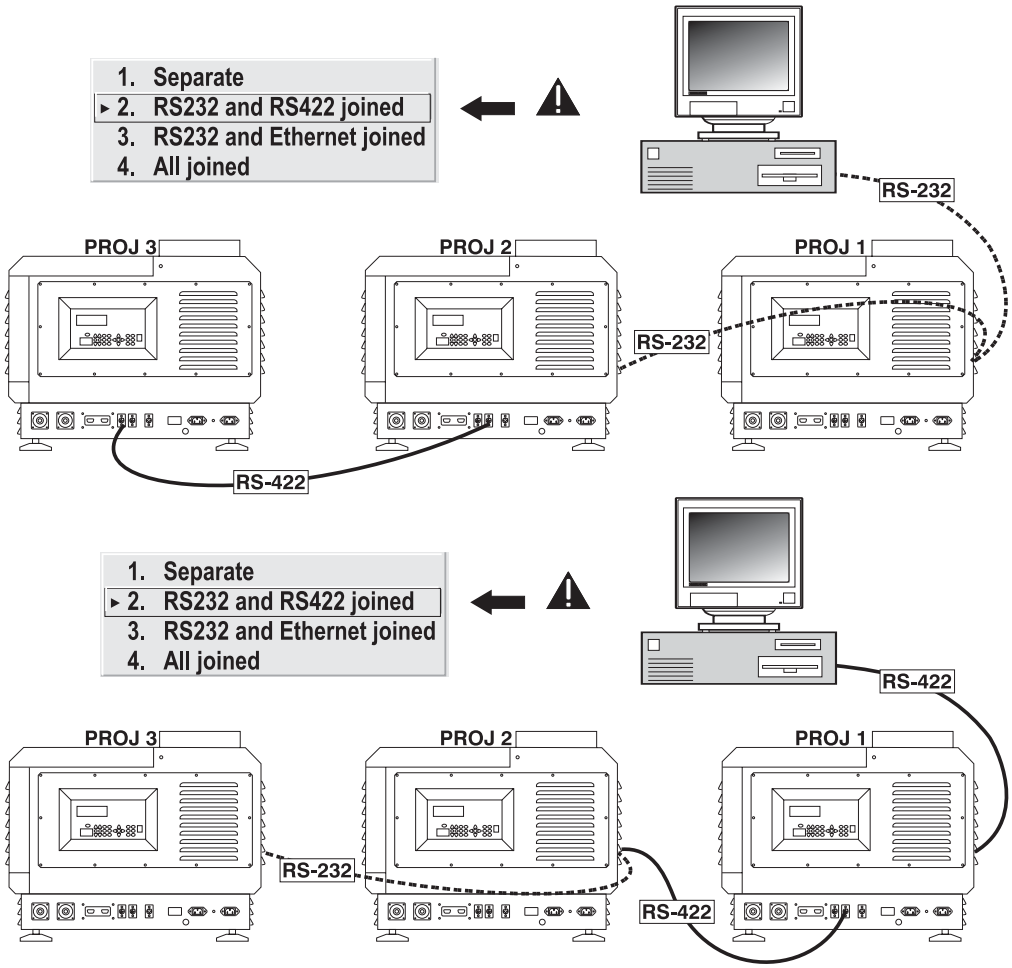

Figure 2.34. Examples of Joined RS232 and RS422 Networks

Note that communication parameters such as baud rate must be set to match the particular controlling device ***before*** connecting as a network—refer to the documentation that came with your controlling device in order to determine the proper baud rate. See *3.8, Adjusting System Parameters and Advanced Controls* if you need help changing the projector baud rate.

NOTES: ***1)*** *To avoid damage, connect only properly wired serial communication cables. See* ***Appendix C*** *for details.* ***2)*** *It is recommended that each RS232 communication cable be no more than 25 feet in length. Use high quality cables.*

Ethernet Networks

' **ETHERNET NETWORK SETUP**: To add one or more projectors to an Ethernet network, use standard CAT5 cable to connect each projector's Ethernet port to a hub belonging to the network. A controller or PC must also be connected to the hub. See Figure 2.35.

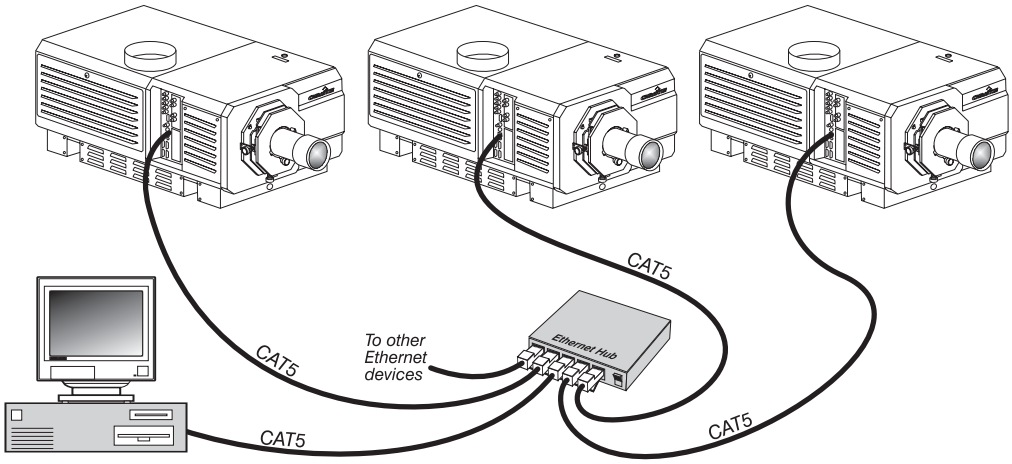

Figure 2.35. Typical Ethernet Network

SETTING THE PROJECTOR'S IP ADDRESS: Upon connection to most Ethernet networks, each projector's factory default IP address of 0.0.0.0 triggers the network's DHCP (Dynamic Host Configuration Protocol) server to automatically assign an IP address that is valid and unique for use on that network. Depending on the network, this DHCP-assigned IP address usually remains stable for the current session, but may change with subsequent power-ups and logins. On some networks, the address will even remain stable from session to session. In all cases, the projector's IP address and port appear in the *Status* menu as well as the *Ethernet Settings* submenu.

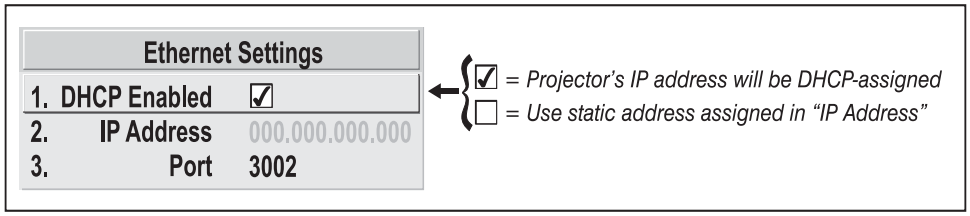

Figure 2.36. Setting the Projector's IP Address

Note that if a networked projector's IP address is anything *other* than the default of 0.0.0.0 (shown as 000.000.000.000 in the *Ethernet Settings* menu), or if a DHCP server is not available, the automatic DHCP server function for supplying a valid and unique IP address is disabled. Instead, you must define a specific and static IP address by entering the new address in the *Ethernet Settings* submenu, or by sending one to the projector via a serial command. The projector will respond to commands sent to this address ***after*** the next power-up, after which the IP address will remain in projector memory until you enter a new one, or until the DHCP checkbox is re-enabled.

NOTES: Only the port and IP address of the projector can be changed. The subnet mask is fixed (255.255.255.0).

CHANGING THE PORT#: On some Ethernet networks, firewall restrictions may require that the port number of the projector be changed from its default of 3002. If so, enter a new port number in the *Ethernet Settings* menu or include the new port# in an XIP serial command sent to the projector.

Separating or Joining Serial Networks

NOTES: ***1)*** *A separate "redundant" network requires double serial links—RS232 and RS422—between all projectors.* ***2)*** *Set each projector's Broadcast Key to OFF.*

3) *Keypads cannot broadcast when networks are separate—use controller(s) instead.*
4) *Do not use a split network when downloading new projector software.*

By default, communications originating from one type of serial controller—RS232 vs. RS422—stay on the corresponding network path rather than being broadcast to the other network. This separation is sometimes known as a *split network* and is indicated by a "Separate" setting for "Network Routing" in the *Communications* menu (see Figure 2.37).

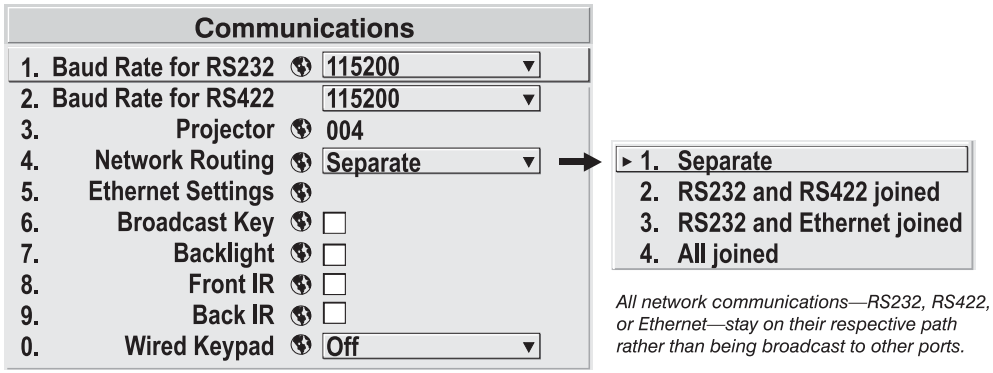

Figure 2.37. Keeping Networks Separate (default)

Keeping networks separate maximizes the efficiency of data transmission. In addition, separate paths means that one path can be considered a redundant "back-up", available if a failed projector (or controller) prevents communication via the first path. With a split network, each projector receives and sends either type of message depending on which controller initiates the commands—should one path fail, the second "back-up" network path can be used. Only one network should be active at a given time, as determined by the controller type, i.e., whether it is RS232 or RS422. *Note that the "Broadcast Key" option must be OFF.*

Two Different Serial "Splits"

There are two different split serial network configurations possible (see Figure 2.38). Set up whichever option best suits your application needs:

A. **SPLIT NETWORK WITH ONE CONTROLLER –** If you have a single controller and want a back-up serial link, connect one controller standard (e.g., RS232) to one physical end of the network and the other controller standard (e.g., RS422) at the other physical end of the network. Make sure the "Separate" option is selected for "Network Routing" in the *Communications* menu. If a projector should then fail anywhere in the network, communication with the remaining projectors can be resumed in the opposite direction using the other standard. *NOTE: This configuration requires that both standards be available from a single controller, or that you use an RS232/RS422 adapter.*

B. **SPLIT NETWORK WITH TWO CONTROLLERS –** If you have two controllers (one RS232 and one RS422) and want one to be a back-up, connect each controller to the appropriate port on the first projector in the network. Then connect projectors together using both RS232 and RS422 ports as shown. Make sure the "Separate" option is selected for "Network Routing" in the *Communications* menu. Now, if either controller fails, you can simply switch to the other controller and communicate via the other standard.

Remember, for either configuration in Figure 2.38, make sure to segregate the networks from one another by selecting the "Separate" option for "Network Routing" in the *Communications* menu.

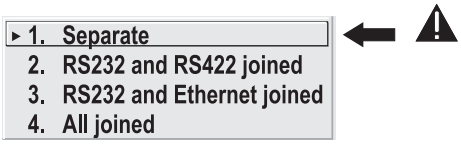

NOTE: When connecting RS422 to a projector, use either of the identical rear ports (6-pin XLR) or the 9-pin "RS422 IN" port on the side input panel.

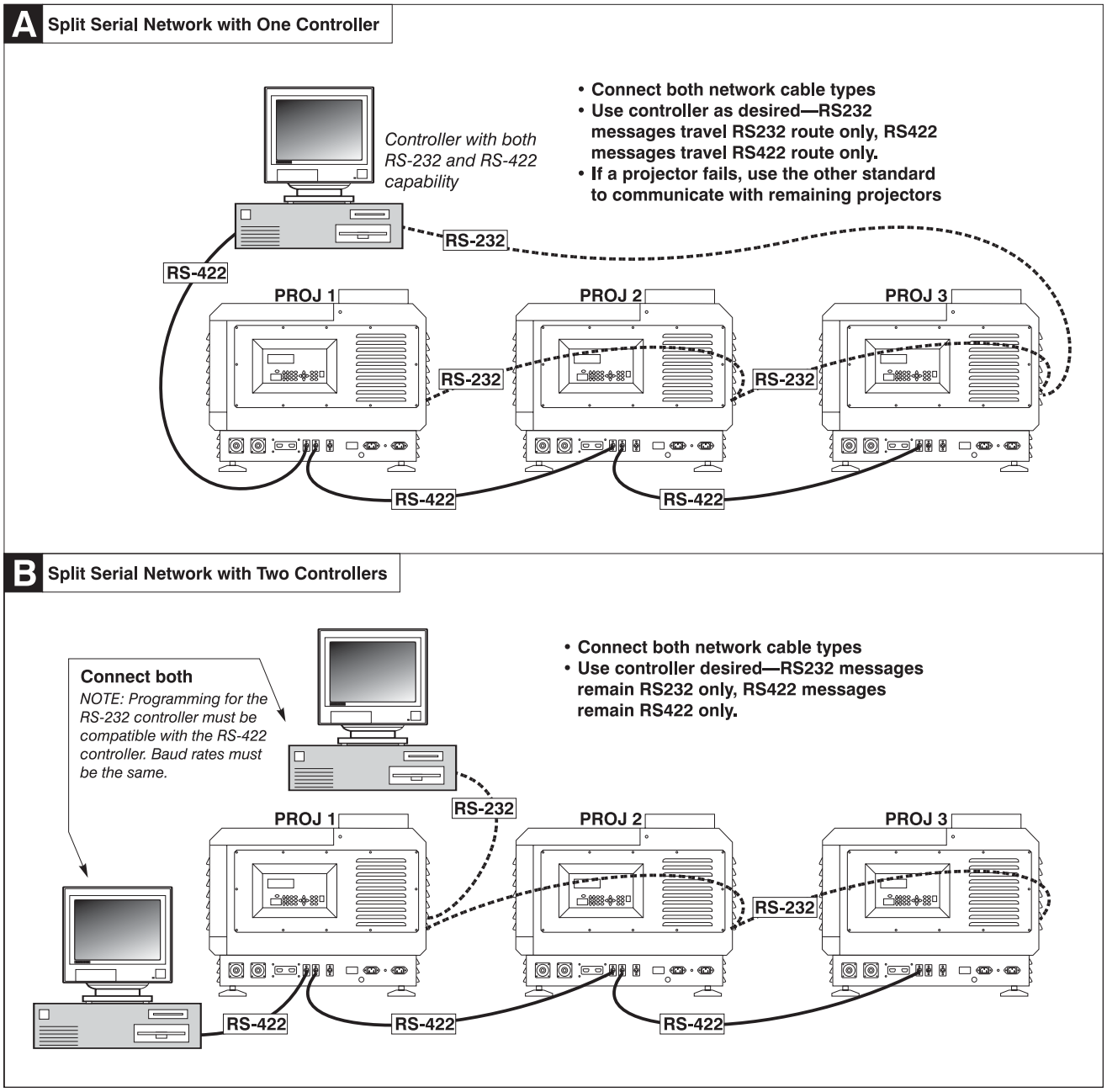

Figure 2.38. Sample Hardware Setups for Split Networks

⚠ IMPORTANT ⚠

Whenever downloading new projector software to networks, use a single-route RS232 network only. DISCONNECT any redundant serial cabling and Select "Separate" for "Network Routing" in each projector.

Communicating to All Ports

1. Separate
2. RS232 and RS422 joined
3. RS232 and Ethernet joined
4. ▸ All joined

To relay messages to *all* ports—RS232, RS422, and Ethernet—regardless of the original source, set the "Network Routing" option in the *Communications* menu to "All Joined" for each projector. This configuration is useful if you have one type of controller available but must link projectors via the other type. For example, you may need to use both an RS422-compatible controller and an Ethernet-connected PC for working with a network of projectors linked via their RS232 in/out ports. In this case, select "All Joined" for "Network Routing" in the *Communications* menu so that all messages reach all ports throughout the network.

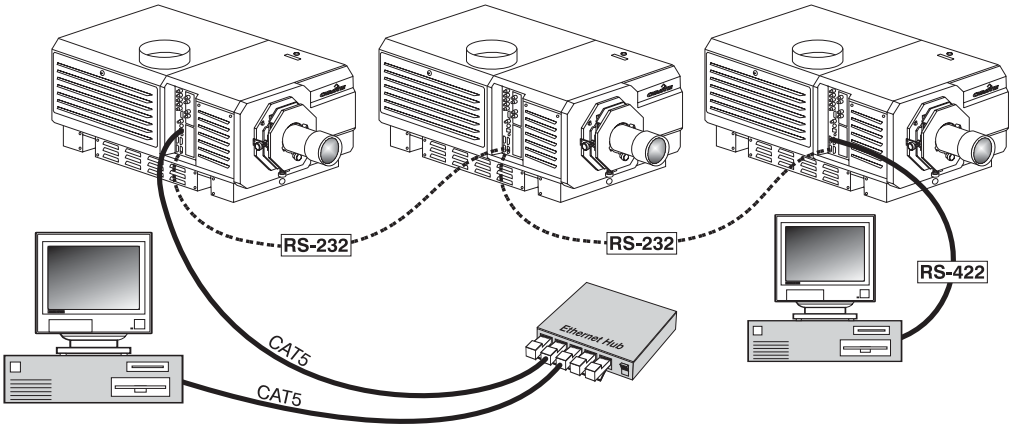

Figure 2.39. Joining All Networks

Communicating to Certain Ports

If desired, you can isolate your RS422 communications so that they are not relayed to any other network—select the "RS232 and Ethernet joined" option for "Network Routing" in the *Communications* menu. Messages from Ethernet will reach the RS232 network, and vice versa, but RS422 messages will not.

▸ 1. Separate	= *Networks do not communicate with one another*
2. RS232 and RS422 joined	= *Serial networks are joined, but Ethernet is isolated*
3. RS232 and Ethernet joined	= *RS232 and Ethernet are joined but RS422 is isolated*
4. All joined	= *Network communications travel all networks*

Or, to isolate Ethernet select "RS232 and RS422 Joined"—all serial messages will be relayed to all serial ports, but Ethernet communications will not (and vice versa).

To keep each communication link separate from the others, select "Separate".

Projector Numbers

It is helpful to define a unique 3-digit projector number to each projector connected in a serial network (for instance, 001, 002, 003, etc.). These numbers enable you to direct commands to a single projector rather than always broadcasting to the entire network. For complete information on how to assign and use projector numbers on a serial network, see *3.8, Adjusting System Parameters and Advanced Controls.*

2.8 Connecting the Ballast

Do not connect the ballast to AC unless the projection head and ballast are already connected to each other, otherwise the exposed live ends of the heavy ballast cables could be a serious hazard.

⚠ WARNING ⚠

Connect the ballast to the projector *FIRST*, then connect to AC.

Configuring the Ballast For Incoming AC

AC power levels vary from region to region throughout the world, with 400 VAC common in some countries (such as those in Europe and Asia), and 200 AC common elsewhere (such as in North America and Japan). To accommodate both possibilities, this ballast includes an internal *Input Power Range Switch* for toggling to the level of AC available at the installation site, i.e. either 200 or 400 VAC. The line cord plug must also match.

From the factory, the ballast's switch and line cord are both set for 200 VAC use. Used/rented ballasts shipped from other installation sites may be set to either, depending on where they were last used—check the status of the line cord plug and switch before attempting to connect to AC. See instructions below (Figure 2.40).

⚠ WARNING ⚠

Qualified electrical technician required.

1. A visual inspection of the plug will indicate 200 or 400 VAC status. Modify as necessary for your site—as a delta load with safety ground, the plug has no neutral.
2. Remove the ballast cover to access and read the *Input Power Range Switch*.
3. Toggle the switch ***left*** for use with 200 VAC supplies, or toggle ***right*** for 400 VAC supplies.
4. Attach the ground lug to Earth Ground.
5. Re-install the ballast cover.

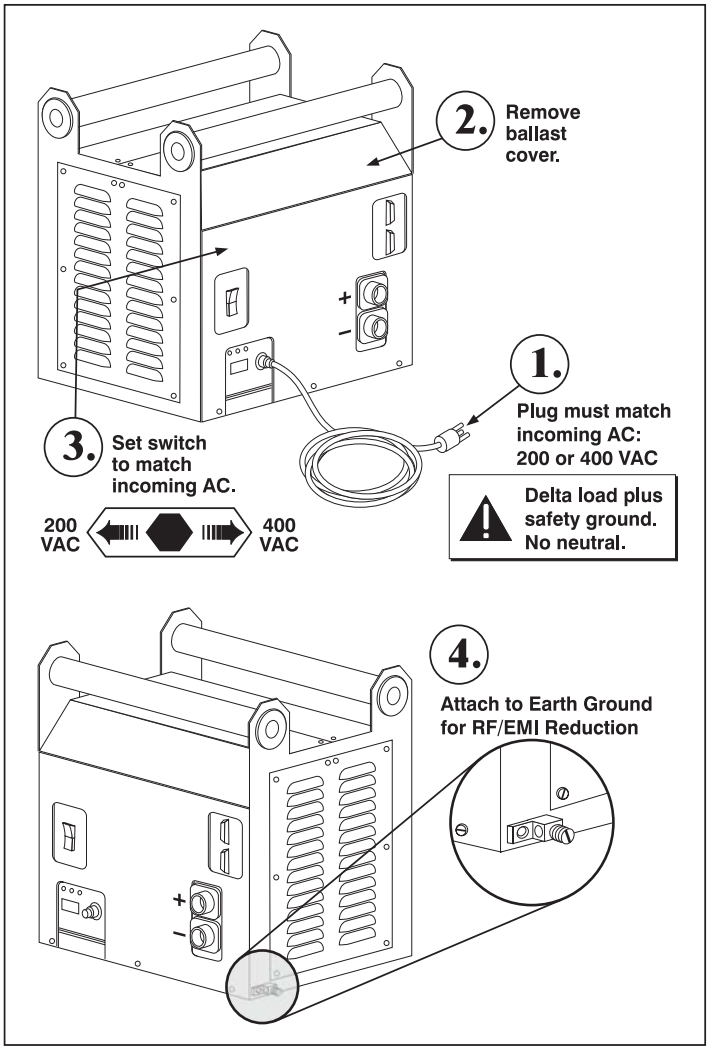

Figure 2.40. Setting Up the Ballast

Connect to Projector ' Connect all 4 ballast cables—two DC power cables, and 2 communication/control cables—to the rear of the projector and to the lamp ballast. Refer back to Figure 2.1.

2.9 Initial Power-up

When the ballast has been properly configured (see *2.8, Connecting the Ballast*) and connected to the projection head, connect its integral line cord to AC. Then:

Set Lamp Type ' Before powering up, set which size lamp is installed. This ensures that proper power is provided to the lamp upon ignition, preventing the risk of seriously overdriving a lamp.

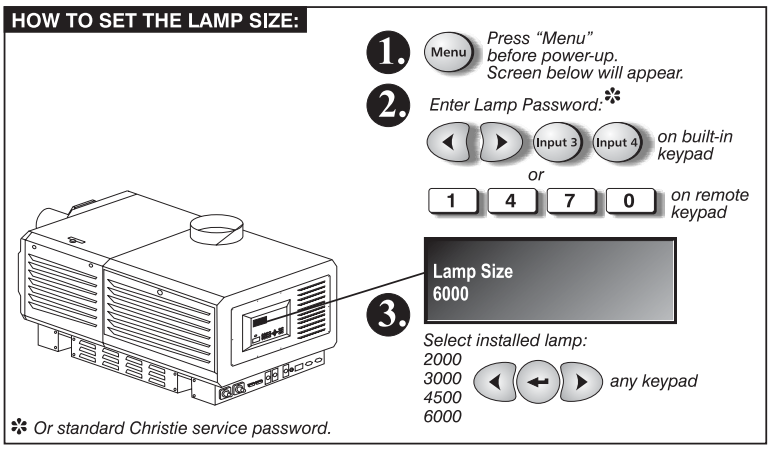

Figure 2.41. Checking or Setting Lamp Size

⚠ WARNING ⚠

Explosion hazard. Keep the projector OFF until you have defined which lamp type is installed.

1. Press (Menu). The Status Display at the rear of the projector will show a "Lamp Size" of 2000, 3000, 4500 or 6000 watts, depending on its last setting (factory default=6000). See Figure 2.41.
2. Enter either the Lamp Password (see Figure 2.41), or the Christie service password. *NOTE: A password is required unless the "Enable Password" service option has been turned off.*
3. Use (◀) (▶) to select which lamp is currently installed.
4. When the Status Display shows the correct lamp type, the projector and lamp can be turned on. Make sure the lamp type is also indicated on the lamp door label—use a small sticker from the front cover of this manual, or mark with a pen.

Power-up ' Power-up the *Roadie 25K* system as described in *3.3, Power-up Procedure/ Checklist,* Steps 1 and 2.

Set Cable Length ' In the *Lamp* menu, set the "Cable Length (m)" slidebar to match the length of the high-voltage DC cables connected between your lamp ballast and projection head. This regulates the voltage drop that occurs over distance, and ensures that adequate voltage reaches the lamp. Particularly in projectors rented for temporary installations, this setting may have to be changed from its last use. Adjustment range is 2-30m (6½-100 ft.).

2.10 Maximizing Light Output

NOTE: By default from the manufacturer, this projector is optimized for brightness rather than wider color gamut or higher contrast ratio—i.e., neither a small-diameter contrast ratio aperture nor the yellow notch filter is installed in the projector. These are options.

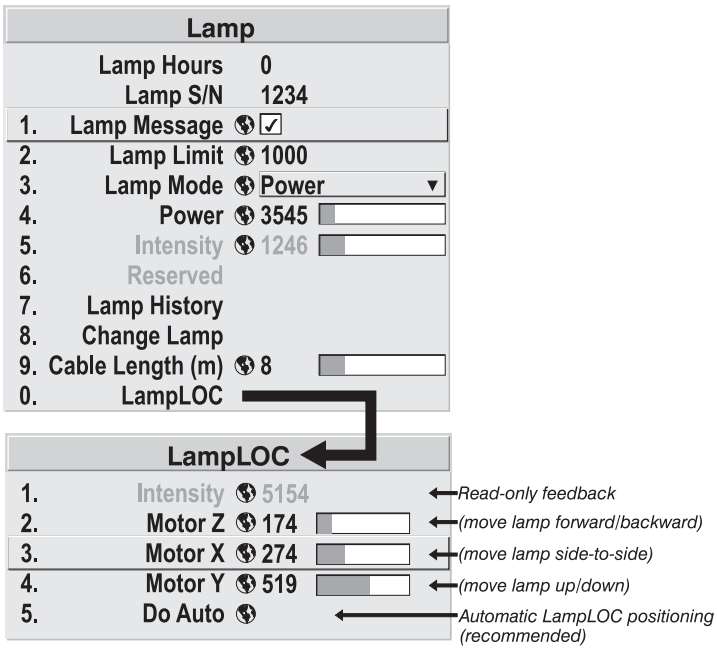

Figure 2. 42. Align the Lamp

Upon powering up the projector with a newly-installed/replaced lamp, adjust lamp position to help ensure optimized operation as well as peak brightness at the screen—you do not need an image displayed yet. Once you have done this LampLOC™ adjustment, the lamp will be well-centered and distanced correctly from the remainder of the illumination system. It can be re-adjusted as needed at any time.

For best results in most applications, use the “Do Auto” button. The motorized lamp adjustments will begin and, in conjunction with an internal light sensor, will take a minute or two to position the lamp for optimized brightness. If desired, you can operate the motors individually and use the “Intensity” reading at the top of the menu for feedback.

*NOTE: Lamp must be **on** and shutter **open** during LampLOC™ adjustment, however the projector does not need to be displaying an image.*

2.11 Basic Image Alignment

NOTE: Assumes a single projector is powered up in its final location.

This initial optical alignment procedure is the foundation for optimizing your displays, ensuring that images reflected from the DMDs are parallel to and well-centered with both the lens and screen. It should be completed before adjusting lens boresight.

NOTE: Before you begin:

- ❑ Properly position the projector relative to the screen (refer back to *2.3, Projector Position & Mounting*).

Basic Optical Alignment Procedure

1. Display a good test pattern appropriate for analyzing image focus and geometry, such as a single crosshair centered across the image.

2. **COARSE FOCUS:** Do a quick preliminary focus and (if available) zoom adjustment with the primary lens only (see *3.13, Working with the Lenses*). Do not worry about consistency across the image at this point, just center focus.

3. **CENTER THE IMAGE IN THE LENS:** Holding a piece of paper at the lens surface, adjust offsets as necessary until the image on the paper is centered within the lens perimeter. A full white field works best for this.

4. **RE-CHECK SIDE-TO-SIDE LEVELING:** With a good test pattern on screen, double-check projector leveling (see *2.3, Projector Position & Leveling*) so that the ***top edge*** of the image is parallel to the top edge of the screen. See right.

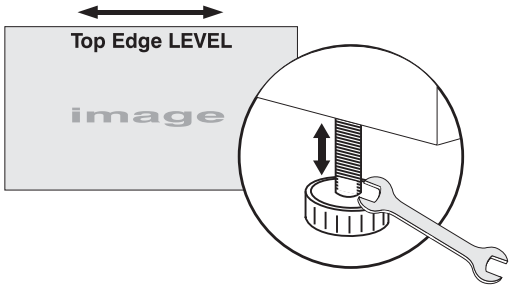

Figure 2.43. Level the TOP Edge

2.12 Boresight Adjustment

*NOTES:**1)** Projector must be installed and powered up in its final location. Install the anamorphic lens if it will be used at the site. **2)** You will need a 3/16" allen wrench. **3)** Boresight may need slight adjustment after installing a new lens.*

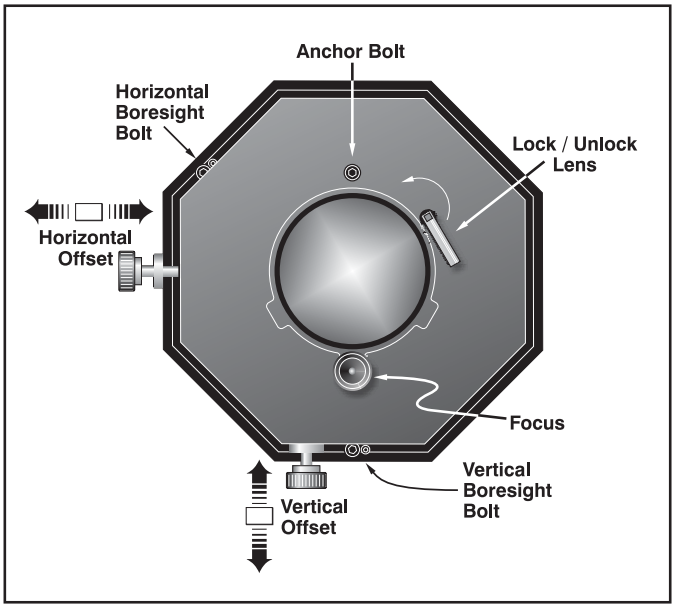

Figure 2.44. Adjusting the Lens Mount

To ensure proper offset for your site and consistently good focus in all areas of the screen, a primary lens must be installed and its lens mount precisely adjusted in relation to internal optics as described below. If desired, an anamorphic lens can then be added to widen images for "scope" displays. Once adjusted, boresight should remain stable until the lens is replaced.

Refer to lens mount components illustrated in Figure 2.44 for these adjustments.

Adjust Offset

NOTE: Project an image using the primary lens only. The optional anamorphic lens, if present, can be mounted but swung aside.

Prior to boresight adjustment, offset the image as required so that the image is square on screen ***but offset is minimal***. For best results, try to minimize offsets by "aiming" the projector lens at the center of the image. Refer back to *2.3, Projector Position and Mounting* for offset ranges and method of adjustment.

Adjust Left/Right Boresight

1. Adjust focus at the far left center edge of the image (Figure 2.45). If possible, reduce image size for easier image analysis.

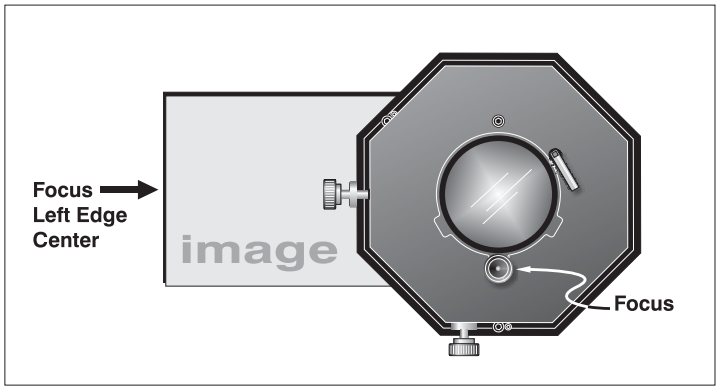

Figure 2.45. Adjust Focus at Left Edge

2. If the image appears well-focused on the left edge but not on the right, then the boresight currently differs from one side to the other—i.e., the right side of the image is well-focused either *in front of* or *behind* the screen surface rather than *on* it. To determine where the right side is focusing:

   - Hold a piece of white paper approximately parallel to the screen surface at the right side (and as close to the vertical center as possible), then move closer to the projector while watching the image on the paper.

     - *If focus on the paper improves*, this indicates that the right side of the image is focusing *in front of* the screen. See Figure 2.46.
     - *If focus on the paper worsens*, this indicates that the right side of the image is focusing *behind* the screen.

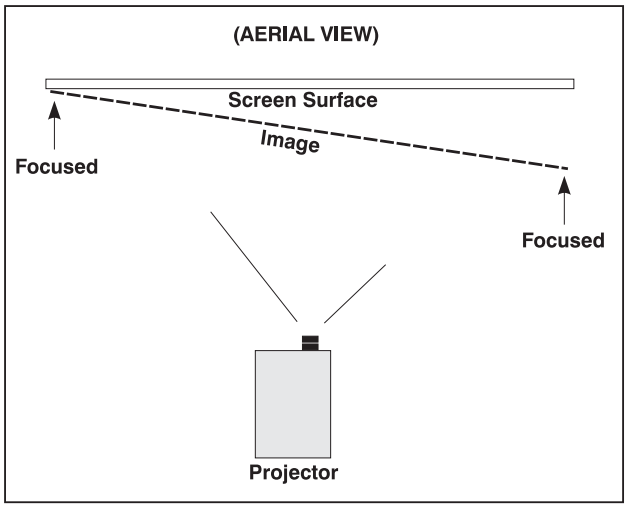

Figure 2.46. Example of Poor Left/Right Boresight

   GOAL: If the image comes into focus on both sides simultaneously, left/right boresight is fine—skip to Step 7.

3. Adjust the horizontal boresight bolt (Figure 2.47) as necessary to direct or "aim" the lens toward the side of the image which focused too close to the lens. When both sides appear equally blurry, re-focus on the left side of the screen.

4. Adjust horizontal offset to re-center the image on the screen.

5. Repeat Steps 4 and 5 until both sides of the are well-focused.

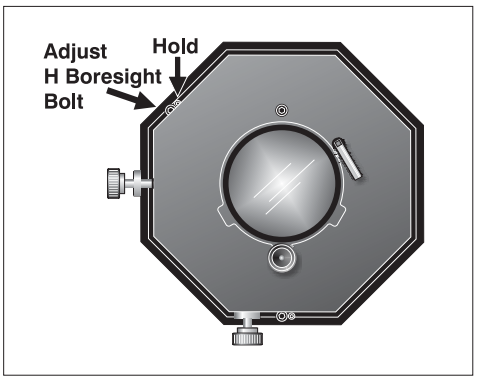

Figure 2.47. Adjust L/R Boresight

6. Adjust the “hold” screw to lock in place, and check boresight again.

Adjust Top/Bottom Boresight

7. When the left/right boresighting is complete, focus the image at the top edge of the screen (Figure 2.48).

   If the bottom remains blurry while the top edge is focused, refer back to Step 2 but use a paper at the *bottom* of the screen to determine whether the bottom of the image is focused *in front of* the screen or *behind* the screen. If the bottom is well-focused, skip to Step 11.

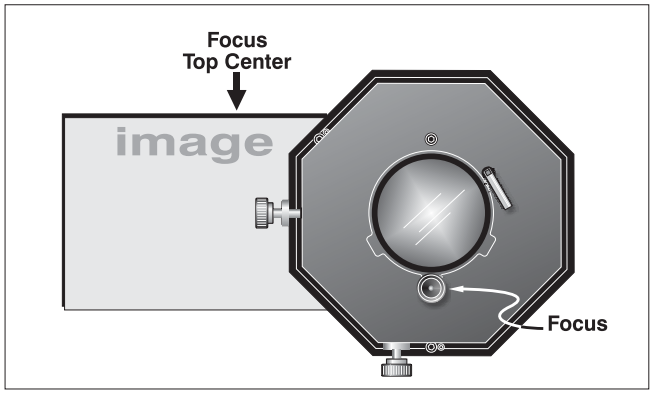

Figure 2.48. Adjust Top Focus

8. Adjust the vertical boresight bolt (Figure 2.49) using one allen key to hold the bottom hex screw and another to turn the adjustment bolt above it. Adjust as necessary to direct or “aim” the lens toward the edge of the image which focused too close to the lens. When both top and bottom appear equally blurry, re-focus at the top of the screen.

9. Adjust vertical offset to re-center the image on the screen.

10. Repeat steps 8 and 9 until the top and bottom of screen are both well-focused.

11. **REFOCUS**: Although all sides of the image should now be in focus, the center of the image will be slightly blurry at this point. Refocus at center of image. The goal is good focus at center and on all sides.

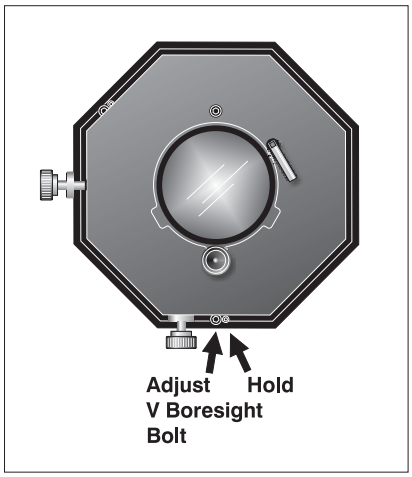

Figure 2.49. Adjust Top/Bottom Boresight

12. Adjust the “hold” screw to lock in place, and check boresight again.

Add Anamorphic Lens

If present, swing the anamorphic lens in position in front of the primary lens. It should magnify in the horizontal direction only, stretching the image straight across the screen—this requires that its aperture (visible within the lens) be *vertically* aligned with the screen. If the image appears skewed, loosen the locking ring on the anamorphic lens and rotate the lens as necessary until the wide image is horizontal.

1. **FOCUS PRIMARY LENS:** With the anamorphic lens in place, re-focus the primary lens using focus knob. The goal is good focus at center and on all sides.

2. **FOCUS ANAMORPHIC LENS:** If horizontal focus in the image needs improvement, focus the anamorphic lens too—rotate its barrel as needed.

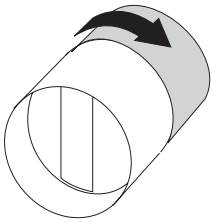

Focus
(ANAMORPHIC)

2.13 Internal Optical Adjustments

In rare instances, shipping and handling may affect the precise factory alignments of one or more optical components—as a final step during installation, a trained installer may want to adjust the fold mirror and/or convergence of the DMDs as described here. In addition, for certain applications and sites you may prefer images having increased contrast ratio and/or the widest possible color gamut, both of which require the addition of internal optical components (sold separately) that will slightly reduce brightness.

⚠ WARNING ⚠
Qualified service technician required.

Contrast Ratio Adjustment

FOR INCREASED CONTRAST RATIO: If desired, the standard *F# Aperture* installed at the factory can be replaced with an optional smaller aperture that improves contrast ratio while slightly limiting brightness. Note that some lamps may be incompatible with some apertures—use only the size(s) recommended for the lamp currently installed in the projector. Follow the installation instructions provided with the *F# Aperture Kit*.

NOTE: The size of any smaller aperture is clearly labeled along its top edge. The factory-installed standard-size aperture (for maximum brightness) is ***not*** *labeled.*

Color Gamut Adjustment

FOR THE WIDEST COLOR GAMUT: Install the *Yellow Notch Filter* (optional) inside the projector, near the lens opening. Adjust to match a known standard, such as x=0.265, y=0.690, or as desired. In applications where maximum brightness is preferred over increased color gamut, do not add the *Yellow Notch Filter* (this is the factory default).

Maximizing Brightness

FOR MAXIMUM BRIGHTNESS: Do not use either the optional *Yellow Notch Filter* or a small-diameter high-contrast *F# Aperture* option in the projector. This is the factory-default configuration. Also, make sure a standard high-brightness lens is present.

DMD Convergence

A convergence problem is evident when one or more projected colors (red/green/blue) appears misaligned when examined with a proper convergence test pattern—where normally the 3 colors should overlap precisely to form pure white lines throughout the image, one or more poorly converged individual colors may appear adjacent to some or all of the lines. A qualified service technician can correct as described on the color *Convergence Instructions* label provided inside the projection head.

NOTE: Custom Convergence Kit required (available separately).

Fold Mirror Adjustment

If a corner or edge of an image is missing, this may indicate that the fold mirror has become misaligned with the rest of the optical system and cannot reflect all data properly. Correct as described below:

1. Locate the fold mirror access plate secured to the underside of the projection head, just below the lens. It has 2 access holes along the front edge, through which you can carefully adjust the fold mirror screws:

- To raise or lower the image, adjust the screw closest to the left side (exhaust side of projector).
- To move the image left or right, adjust the screw closest to the right side (lamp side).

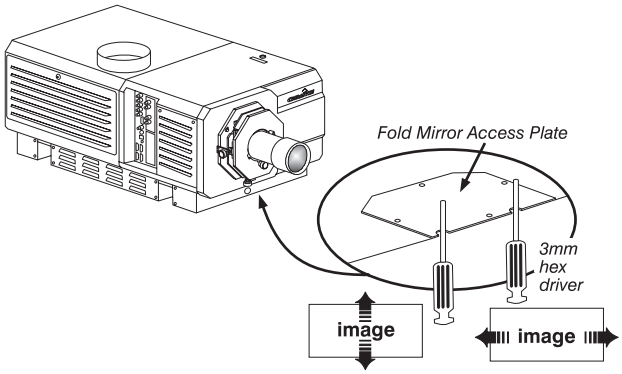

Figure 2.50. Fold Mirror Adjustment

Proper fold mirror adjustment is shown at right, with the whole image well-centered between the projected edges of the integrator.

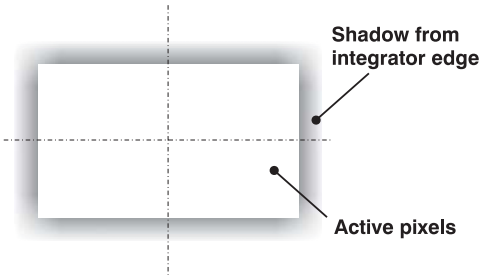

2.14 Remote Keypad Protocols and Conversion

NOTE: Protocols B-G are not supported in v1.0 software. Use "A" or "Wired" only.

At manufacture every remote keypad is assigned "A" as its default protocolwhich is simply a collection of settings that determine how the keypad operates. Once assigned, this protocol remains in effect until it is changed—that is, a remote keypad will operate as it currently does until you change its protocol. Each IR remote can operate using one of 7 different protocols, or it can be set to a "wired" protocol when a cable is added for connecting the remote to the projector. Changing a keypad's protocol is done via "hard-wired" jumper settings inside the keypad.

The IR protocols A-G are generally used for multiple-projector applications. For example, you might want to change a keypad protocol if you need to control multiple projectors independently (Figure 2.51). When Keypad A operates under a different protocol than Keypad B (or others), each keypad communicates *only* with the projector(s) having a matching protocol defined in memory.

NOTE: Matching the protocol on the projector to that of a keypad is done through a setting in the ***Communications*** *submenu. See* ***3.8, Adjusting System Parameters and Advanced Controls*** *for further information on how to define which protocol the projector's infrared sensors (rear and front) will recognize.*

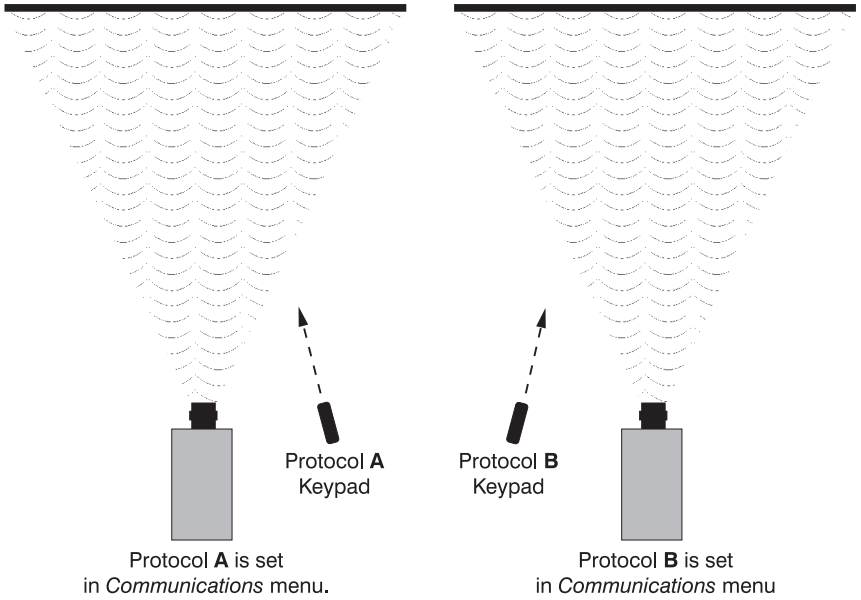

Figure 2.51. Independent Keypads and Projectors

Remote Keypad Protocols

The *Roadie 25k*'s standard IR remote keypad can be set to one of seven different protocols, "A" through "G". To change protocol in the remote, follow Steps 1 through 4.

NOTE: Protocols B-G are ***not*** *supported in v1.0 software. Use "A" or "Wired" only, both of which can be turned on or off.*

Step 1

Unlatch and open the battery compartment on the back of the keypad as shown in Figure 2.52.

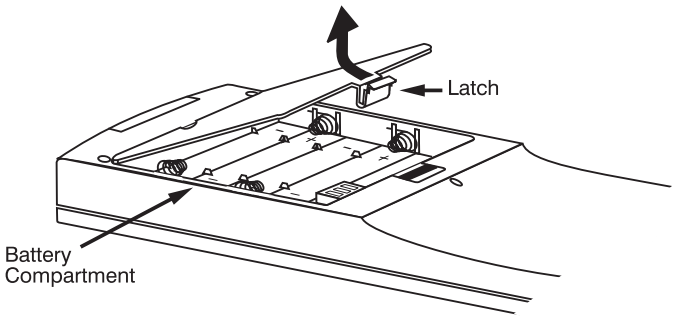

Figure 2.52. Opening the Remote

Step 2

Find the 4 jumpers located along the latching side of the battery compartment. These jumper settings establish the remote keypad protocol so that the remote functions in a certain manner.

Step 3: Set the Jumpers

Set the jumpers to match one of the protocols shown in Figure 2.53. Use tweezers or needle-nose pliers to remove and replace each jumper as necessary.

- **J1** jumper: Set between 1 and 2 *or* 2 and 3 as required for the desired protocol.

- **J2** jumper: Set between 1 and 2 *or* 2 and 3 as required for the desired protocol.
- **J3** jumper: Set between 1 and 2 *or* 2 and 3 as required for the desired protocol.
- **J4** jumper: For IR use, *always* set between pins 1 and 2 (see A-G below).

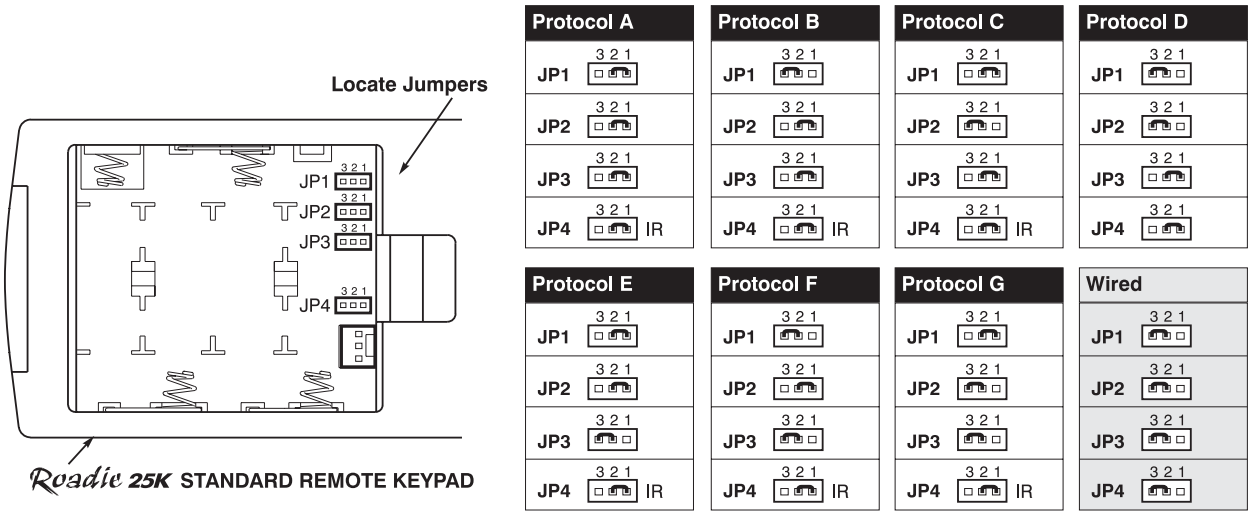

Figure 2.53. Locating and Setting the Jumpers

*NOTE: Protocols B-G are **not** supported in v1.0 software. Use "A" or "Wired" only.*

Step 4

Replace battery compartment cover. Plug into projector (wired keypad only) and test.

*NOTE: If you change any keypad to a new protocol and the projector stops responding, the projector may be set to a conflicting protocol. Use the projector's built-in keypad to access the **Communications** submenu. Under "Front IR" or "Back IR", select the protocol that matches the new protocol of the keypad at hand. The projector should now respond properly.*

SHORTCUT METHOD:

Unlike earlier Christie projectors and keypads, there is no shortcut method for changing a keypad's protocol through a special sequence of keystrokes. You must change the internal jumper settings.

Converting a Keypad

If desired, you can convert an IR remote keypad into a wired remote keypad and vice versa. Set the jumpers as shown in Figure 2.53, and add or delete the cable and batteries as required. The cable with appropriate connector is supplied with the projection head.

TO CHANGE FROM INFRARED TO WIRED:

- Remove battery compartment cover from back of keypad.
- Remove batteries.
- Wait 1-2 minutes.
- Plug the keypad cable (supplied) into the empty battery compartment. Pack with foam as an internal strain relief. Make sure that the battery cover is notched smoothly to accommodate the cable without pinching it.
- Set keypad protocol to "wired" jumper setting (refer back to Figure 2.53). Make sure to set jumper #4 between pins 2 and 3 as shown in the last example (shaded).

- Replace battery compartment cover.
- Plug into the 3-pin XLR port at the rear panel of the projector.

TO CHANGE FROM WIRED TO INFRARED:

- Unplug the keypad from the projector.
- Open the keypad back and unplug the keypad cable.
- Wait 1-2 minutes.
- Install batteries (see *Section 4*).
- Set jumpers according to the desired IR protocol (refer back to Figure 2.53). Make sure to set jumper #4 between pins 1 and 2 as shown for all remote protocols.
- Replace battery compartment cover.

Section 3

Operation

3.1 Projector Basics

This section describes how to use the projector after it is properly installed by a qualified service technician as described in *Section 2, Installation and Setup*.

Components/Features

Chief ***Roadie 25K*** components are identified on the following page

See page 3-2.

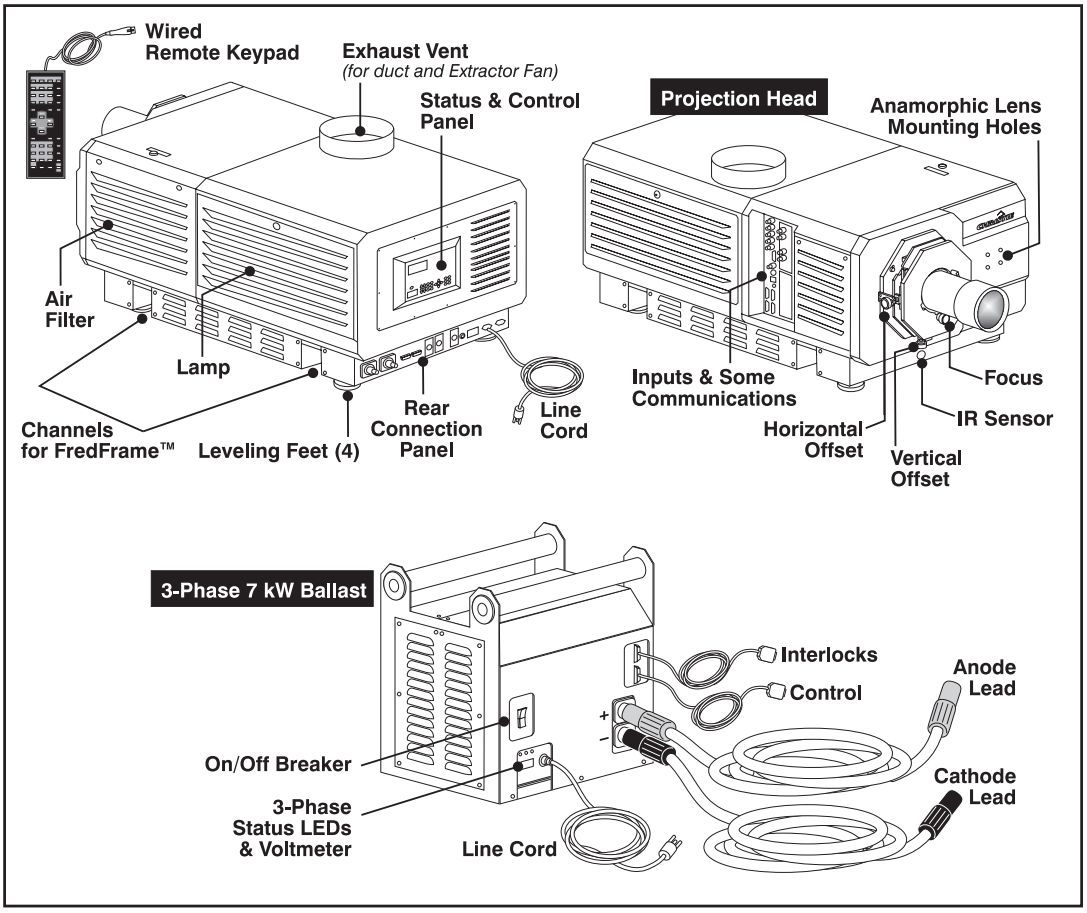

Figure 3.1. Basic Projector and Related Components

Projector components are briefly described and listed in alphabetical order below:

Air Filter

Intake air flows through the filter before circulating in the front compartment to cool the main electronics. Replace the air filter whenever the lamp is replaced—or sooner in dusty/dirty environments. ***Check condition monthly.*** See *6.4, Replacing the Lamp & Filter* for complete instructions.

Ballast Breaker (on/off)

The breaker on the lamp ballast serves two purposes: 1) it is a power switch for the *Roadie 25K* ballast 2) it protects against over-current conditions of 50A or more. The breaker must be ON in order to enable normal *Roadie 25K* system power-up and operation. If faulty or major excessive AC is detected, the breaker will "trip" to OFF in order to prevent damage. Try moving the breaker ON again—if the breaker continues to trip OFF, this indicates a major fault and the AC problem must be resolved. Possible causes might include shorts, damage to lamp cables, or very excessive AC.

NOTE: This switch does ***not*** *power up the projector or start the lamp. You must press* ⏻ *(POWER) on the keypad.*

The ballast's internal fan indicates whether or not the breaker/switch is on. There is no other indicator. Lights on the ballast indicate only that the ballast is plugged in.

Channels for FredFrame™

Adjustment mechanisms (part of Christie's FredFrame™) insert and secure into these channels under the projector, enabling the projector to be hoisted, flown, and/or stacked. Consult complete installation instructions supplied with the frame kit.

Control Panel (REAR OF PROJECTOR)

The rear control panel includes the built-in keypad, IR sensor, 2-digit error code window, and the LCD status display.

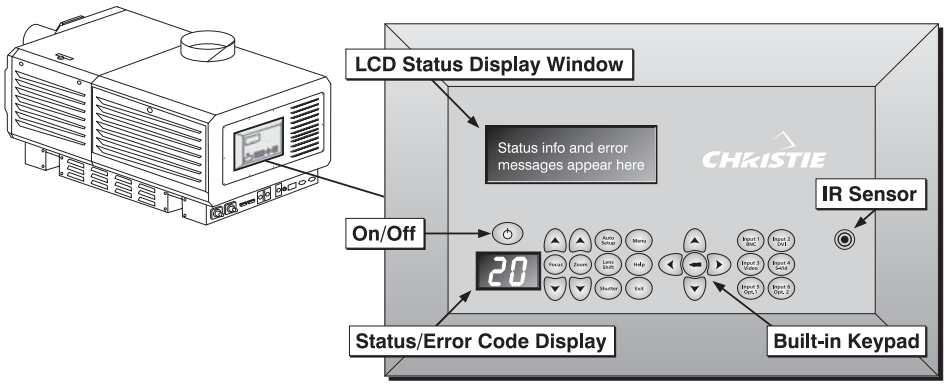

Figure 3.2. Control Panel

- **BUILT-IN KEYPAD:** Provides access to all software controls needed for working with the projector. For more convenient functionality, use a remote or a serial message-based method of control.
- **IR SENSOR:** Detects commands from the IR remote keypad. A second IR sensor located on the front of the projector can also detect IR commands reflected from the screen.
- **2-DIGIT STATUS / ERROR CODE WINDOW:** The code appearing here indicates the basic operational state of the projector. Codes are translated in the LCD Status Display window, and are listed at the end of *Section 3*.
- **LCD STATUS DISPLAY:** Full status and error messages appear in this window.

Exhaust Duct

Connect the projector's 8" top exhaust hole to a rigid duct (provided). Add Christie's 50/60 Hz heat extractor at the opposite end of the duct so that adequate airflow (600 cf/m) is maintained near the top of the projector. The vane switch in this vent will prevent start-up and/or trigger a shutdown if airflow is inadequate. See *Section 2, Installation & Setup*. In a stack of projectors, Christie's *Side-Venting Duct Adapter* must be installed to redirect exhaust rising from the bottom projector's exit duct.

Input Panel

Connect input sources and a variety of communication cables here, all described in *2.5, Connecting Sources* and *2.6, Connecting Communications*. If desired, connect an optional remote keypad having a small headphone jack type connector.

Lamp

Use one of the following lamp sizes (note ballast requirements):

Lamp Size	Ballast Required
2.0 kW	Single-or-3-Phase
3.0 kW	Single-or-3-Phase
4.5 kW	3-Phase
6.0 kW	3-Phase

NOTE:: The single-phase ballast is not yet available.

Keep the lamp door closed and locked for all normal operation. Trained technicians (only) can access the lamp via security key. Complete lamp details and warranties are provided in *Section 6, Specifications*.

Lens Mount & Anamorphic Lens Mount

The lens mount secures and seals a primary zoom lens within the projector and provides manual adjustment of focus, zoom and offset. Adjacent to the primary mount, an optional anamorphic lens mount may be added, providing a mechanism for positioning a 1.25x anamorphic lens in front of the primary lens. Such a lens horizontally spreads a pre-squeezed image back into its wider 2.39:1 “scope” image, and is most typically used in side-masking displays.

Leveling Feet

Turn the 4 adjustable feet to increase or decrease projector height and/or tilt as needed. For most installations, the projector will likely be slightly inclined to match screen tilt – this reduces the amount of vertical offset required. See *2.3, Projector Position & Mounting*. For flown projectors, the feet can be removed.

DC Power Cables

Heavy-duty DC lamp cables between the ballast and the projection head are 6½ – 100 feet (2-30 meters) in length. The ballast, projection head and heat extractor fan all include their own line cords.

Projection Head

The projection head houses all critical illumination and optical components as well as the *DLP™* processing technology responsible for combining light and incoming source signals into brilliant high-resolution digital displays. Source inputs connect to the input panel on the side of the projector. Projector function is controlled via the integral keypad, remote keypad, or other communication link from a controller. The projection head is closed and locked for normal operation.

Rear Connection Panel

The rear connection panel links the projection head to AC power, to an external RS422 controller, and to the other *Roadie 25K* components (ballast, extractor fan and a tethered keypad).

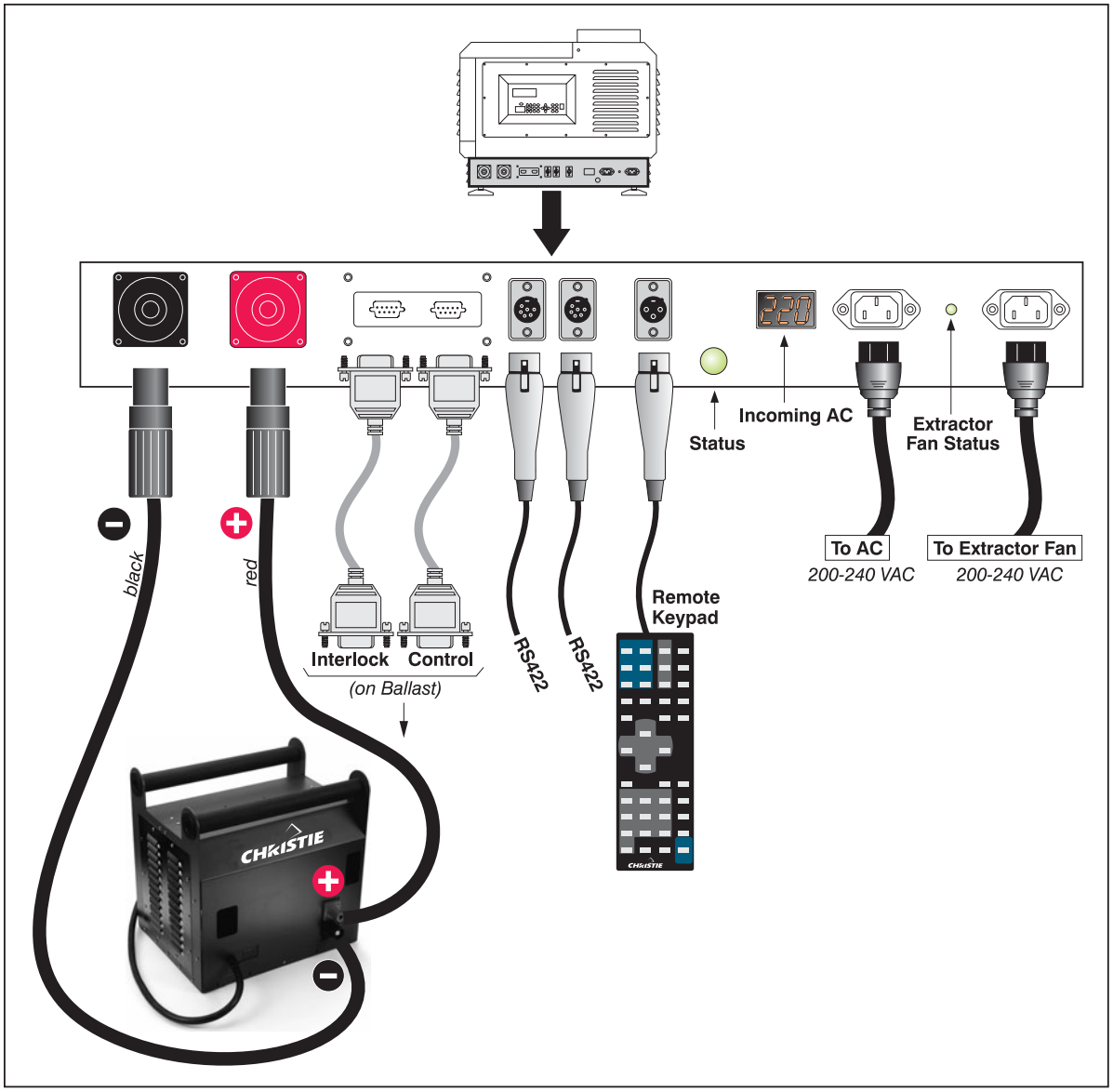

Figure 3.3. Rear Connection Panel

- **CATHODE/ANODE CONNECTORS:** For connecting the ballast's 2 lamp cables (both DC). Note that cable length must also be defined in the projector.
- **BALLAST INTERLOCKS:** For connecting the safety interlock signals and the Lamp Enable signal between the ballast and the projection head (RS232).
- **BALLAST CONTROL:** For connecting the RS232 control signals between the ballast and the projection head, enabling the projection head to dictate the amount of current (or power) to be supplied from the ballast to the projection head.
- **RS422:** Use either of these identical ports to connect RS422-compatible equipment, such as a PC, for serial communication. The ports also provide loop-through connection of a serial network. See *2.7, Connecting Multiple*

Projectors for details. Unlike the 9-pin RS422 port on the side of the projector, the rear RS422 ports cannot be used for downloading new software to the projector.

- **REMOTE:** For connecting the wired (tethered) remote keypad.
- **VOLTMETER:** During operation, this window displays the number of AC volts reaching the projector. Monitor and make sure the display reads within the acceptable nominal AC range (200-240) at all times. If the window is dark, this indicates that **1)** the projection head is unplugged or **2)** the projection head is not powered up or **3)** inadequate, excessive or faulty AC has automatically "tripped" (opened) the ballast breaker, causing a shutdown.
- **PROJ STATUS:** This large bright light indicates from a long distance the current operating state of the projector, such as if it is turned off or running normally, or has a critical problem that needs investigation.
    - OFF = Projection head is unplugged.
    - Amber = Head is plugged in but turned off.
    - Green = Normal operation.
    - Red = Error preventing normal operation.
- **AC INPUT:** For connecting the projection head line cord to AC. Upon plug-in, the projector is in a minimal power stand-by mode.
- **EXTRACTOR FAN & LED:** For connecting and monitoring the external extractor fan routed to the top vent on the projector.

Security Locks

Critical internal components and/or connections are protected by standard medium-security locks. This safeguard helps ensure access by authorized personnel only. Remaining panels are not removable with standard tools, or they are blocked by other obstacles that prevent theft or tampering.

3.2 Using the Keypads

The projector is typically controlled using one of the following keypads:

- ***Built-in Keypad*** at the rear of the projection head
- ***Remote Keypad*** for tethered or tetherless control up to 100 feet away (includes cable for use as a wired remote)

While each of the keypads provides complete control of the projector, they differ slightly in their arrangement of keys and in what functions can be accessed directly with a key press rather than requiring use of the menu system. You may find one keypad more convenient than another for your specific installation and application.

NOTE: A smaller "lite" remote keypad is also available as an option. It has a single IR protocol, and can be converted to a wired remote simply by adding its cable and connecting to the RCA jack on the side of the projector.

Built-in

To control the projector when signals from a remote keypad cannot reach the projector, use the projector's built-in keypad. Two nearby status windows provide feedback indicating current

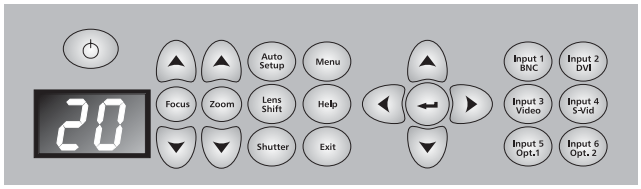

Figure 3.4. Built-in Keypad at Projector Rear

status and activities of the projector. Because the built-in keypad has fewer keys than the remote keypad, certain projector functions are accessible only through the menu system rather than via a direct key.

Refer to the key descriptions provided for the IR remote (Figure 3.5).

IR Remote

The IR remote keypad controls the projector by way of wireless communications from a battery-powered infrared (IR) transmitter. Use the IR remote keypad the same way you would use a remote keypad supplied with a TV or VCR. When making key presses, direct the keypad either toward the screen or toward the front or rear of the projector. One of the two IR sensors on the projector will detect the signals and relay the commands for internal processing.

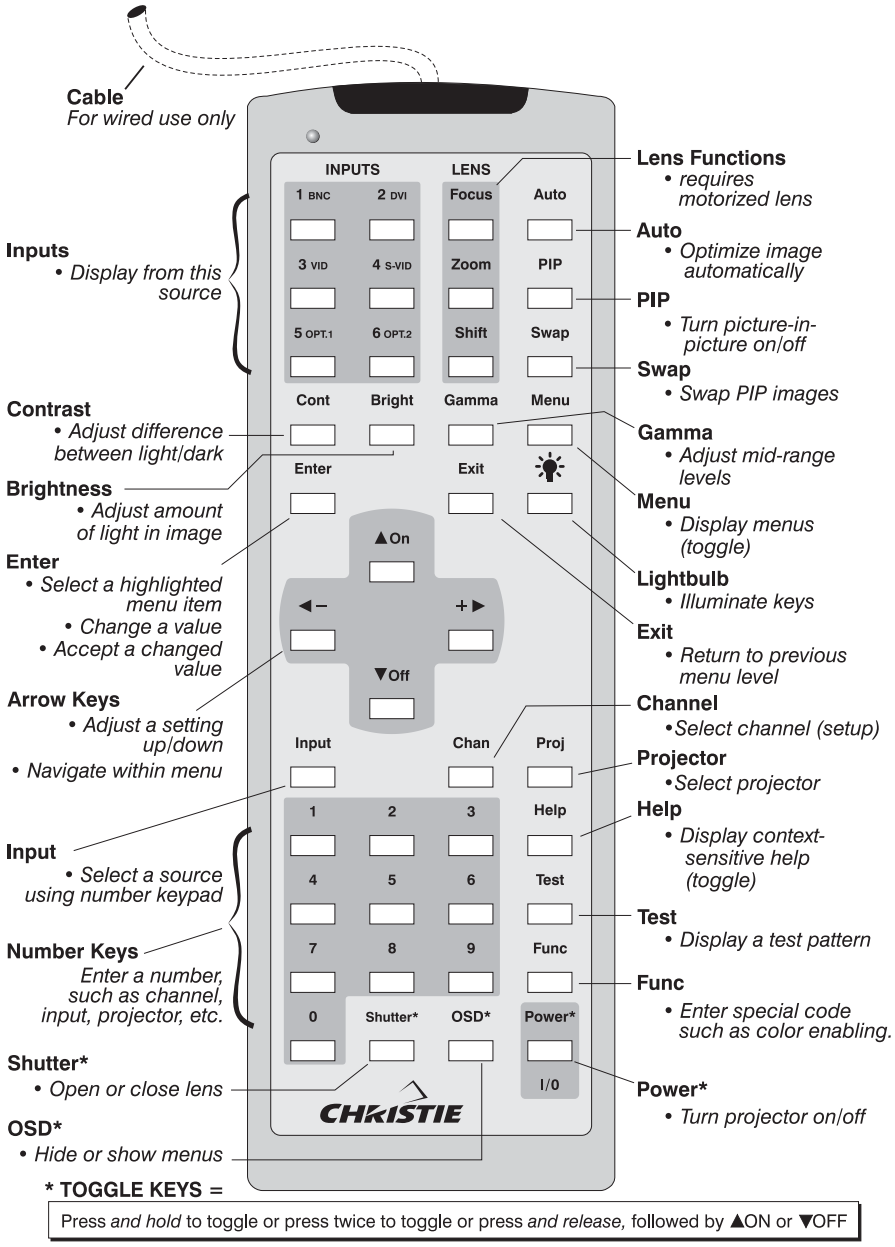

Figure 3.5. Standard Remote Keypad

Wired Remote

With the addition of a cable (supplied) and with proper internal jumper settings, the IR remote converts into a wired remote keypad which connects to the 3-pin XLR jack via a 100 ft. cable. The wired remote is recommended when:

- the rear built-in keypad is inaccessible
- the lighting conditions are unsuitable for proper IR transmission

Change the jumper settings to "Wired" (see *Section 2.14*). Upon plug-in to the projector, enable the "Wired Keypad" checkbox in the *Communications* menu.

NOTE: A smaller "lite" wired remote is available as an option. It has only one protocol, thus needs no change in jumper settings, and connects via RCA connector to the input panel on the side of the projector. Commands from this keypad have priority if the standard remote is also connected (to the rear of the projector). Leave the batteries in if you want its "laser" key to work.

Guide to Keypads

Keep in mind the following guidelines:

1) Press keys one-at-a-time; there are no simultaneous key combinations required.
2) To protect against accidental use, three keys—Power, Shutter and OSD—are "press-and-hold" keys that do not function with a typical quick press-and-release keypress.
3) Hold arrow keys down for continuous adjustment/movement in one direction. In serial networks, pause briefly between adjustments to ensure that more distant projectors can "keep up" with the commands.
4) If you press a key while the projector is still responding to the previous action, such as during power-up, the second key press may not take effect.

Keypad Commands

Specific keypad commands are explained below:

Power ON/OFF

Press *and hold* ⏻ for a second or two to toggle the projector on or off with a single keystroke. Or press and release ⏻ followed immediately by ▲ (on) or ▼ (off) to guarantee the correct toggle (useful if you are unsure of the present state). Alternatively, press ⏻ ⏻ to toggle from the present on/off state.

NOTES: ***1)*** *After powering down, the lamp cooling fan remains on for approximately 10 minutes to cool the lamp.* ***2)*** *It is a good idea to avoid turning a projector back on until it has been off for 2-3 minutes. Hot re-strikes of the lamp may reduce lamp life.*

Test

Press Test to scroll through the projector's internal test patterns in order, including the current input. Or use ◄ ► to scroll only the test patterns (no input) in either direction.

Auto

Press Auto (a.k.a. "*Auto Setup*") to initiate an automated process in which the projector optimizes critical display parameters such as size, position, pixel tracking, etc., for the current source. These parameters are listed in Table 3.1. An *Auto Setup* can save time in perfecting a display, and you can modify the adjustments as desired.

Table 3.1. Auto Setup

What an "Auto Setup" Does	
OPTIMIZES:	***SETS TO DEFAULT:***
Pixel Tracking	Contrast
Pixel Phase	Brightness
Size and Blanking	Auto Input Level (off)
Vertical Stretch	Detail *(if video source)*
Position	Filter
Input Levels	Luma Delay

NOTE: You must have an unlocked channel present to use Auto Setup.

(Help) Press (Help) to display summary information about the current menu or highlighted menu option. Or, if there is no menu present, press (Help) to access a list of general help topics. To exit any help text, press (Help) again (or (Exit)).

(Chan) ***Channel***

Press to select a specific source setup (*channel*) defined and stored in projector memory. Once you enter a 2-digit channel number (or, if there is a list displayed, highlight it and press (↵)), the display will automatically change and update according to the numerous setup parameters defined for that channel. Note that a new channel is automatically created if you adjust animage from a new source.

NOTE: (Chan) key behavior during a presentation depends on whether or not the ***Display Channel List*** *option is enabled in the* ***Menu Preferences*** *menu. You can choose to use a scrollable list of channels when you press (Chan), or you may prefer to enter the desired channel number "blind", i.e., without on-screen feedback. See* ***Menu Preferences*** *later in this section.*

(Input 1) ***Input 1***

Press (Input 1) to display from the data input source connected to BNCs labeled **INPUT 1**.

(Input 2) ***Input 2***

Press (Input 2) to display from the DVI source (analog or digital) connected to **INPUT 2**.

(Input 3) ***Input 3***

Press (Input 3) to display from the composite video source connected to **INPUT 3**.

(Input 4) ***Input 4***

Press (Input 4) to display from the S-video source connected to **INPUT 4**.

(Input 5) ***Input 5***

Press (Input 5) to display from the **INPUT 5** interface module installed in the Option 1 slot, which is typically the standard factory-installed *Dual SD/HD-SDI Module*. Note that if there are two inputs connected to this module, the second input (B) is considered **INPUT 7** and can be most easily accessed with [Input] [7]. Or, if you are using the built-in keypad or the optional "lite" remote keypad, neither of which have a separate [Input] key, use **INPUT 5** to access **INPUT 7** as follows:

- While displaying from **INPUT 5**, press (Input 5) again. This switches to **INPUT 7**.

- While displaying from any input *other* than the *Dual SD/HD-SDI Module*, press (Input 5). This switches to either **INPUT 5** or **INPUT 7**, depending on which of the *Dual SD/HD-SDI Module* inputs (A or B) was last used. Press (Input 5) again to display from the other *Dual SD/HD-SDI Module* input.

NOTE: Access to Input 7 requires projector software v1.1 or higher.

(Input 6) *Input 6*

Press (Input 6) to display from the **INPUT 6** interface module installed in the Option 2 slot. If the *Dual SD/HD-SDI Module* is installed here, and there are two inputs connected, its second input (B) is considered **INPUT 8** and can be most easily accessed with [Input] [8]. Or, if you are using the built-in keypad or the optional "lite" remote keypad, neither of which have a separate [Input] key, use **INPUT 6** to access **INPUT 8** as follows:

- While displaying from **INPUT 6**, press (Input 6) again. This switches to **INPUT 8**.

- While displaying from any input *other* than the *Dual SD/HD-SDI Module*, press (Input 6). This switches to either **INPUT 6** or **INPUT 8**, depending on which of the *Dual SD/HD-SDI Module* inputs (A or B) was last used. Press (Input 6) again to display from the other *Dual SD/HD-SDI Module* input.

NOTE: Access to Input 8 requires projector software v1.1 or higher.

[Input] *Input*

Enter [Input] [*n*] (where *n* = 1, 2, 3, 4, 5, 6, 7 or 8) as an alternative method for selecting which source to display. Six source locations are identified with input numbers on the projector's input panel. The last two, 7 and 8, require the *Dual SD/HD-SDI Module* installed in either of the option slots and can be accessed with software v1.1 or higher.

NOTE: [Input] key behavior depends on whether or not the ***Display Channel List*** *option is selected in the* ***Menu Preferences*** *menu. You can choose to have on-screen feedback when you press [Input], or you may prefer to enter the desired source location "blind", i.e. without on-screen feedback. See* ***Menu Preferences****.*

(Cont) *Contrast*

Press (Cont) to change the amount of white in your images. Use (◀) (▶) keys until you reach the desired level of white—for best results, start low and increase so that whites remain bright but are not distorted or tinted, and that light areas do not become white (i.e., "crushed"). Conversely, low contrast causes dim images. See *3.7 Adjusting the Image (Image Settings* subsection).

(Bright) *Brightness*

Press (Bright) to increase or decrease the amount of black in the image. Use (◀) (▶) keys until you reach the desired level of black—for best results, start high and decrease so that dark areas do not become black (i.e., "crushed"). Conversely, overly high brightness changes black to dark gray, causing washed-out images. See *3.7 Adjusting the Image (Image Settings* subsection).

Gamma

"Gamma" is a global setting that determines what gray shades are displayed between minimum output (black) and maximum output (white) for all signals. The proper setting helps maintain optimized blacks and whites while ensuring a smooth transition for the "in-between" values utilized in colors. Thus, unlike brightness and contrast settings controls, the overall tone of your images can be lightened or darkened without changing the two extremes, and all images will be more vibrant yet with good detail in dark areas.

The normal gamma setting of 2.2 is correct for most signals and conditions. If excess ambient light washes out the image and it becomes difficult or impossible to see details in dark areas, lower the gamma setting to compensate. Conversely, if the image is washed out and unnatural, with excessive detail in black areas, increase the setting. Again, good gamma improves contrast while maintaining good details for blacks.

Menu

Press Menu to enter or exit the projector's menu system.

OSD (On-screen display)

Press OSD ▼ to hide the projector's menu system during use. To see the menus again, do one of the following:

- Press *and hold* OSD for a second or two
- Press and release OSD followed immediately by ▲
- Press OSD OSD

Invisible menus are fully functional, enabling "hidden" access to numbered features and image adjustments by entering the corresponding sequence of keypresses on the keypad.

NOTES: ***1)*** *With OSD "on", you can still hide on-screen error messages and direct slidebars doing so in the* ***Menu Preferences*** *menu.* ***2)*** *The state of the on-screen display is shown in the LCD window at the rear of the projector.*

Shutter

Press *and hold* Shutter for a second or two to toggle the internal mechanical shutter blade closed or open with a single keystroke. Or press and release Shutter followed immediately by ▲ (closed) or ▼ (open) to guarantee the correct toggle (useful if you are unsure of the present state). Alternatively, press Shutter Shutter to toggle from the present on/off state. Close the shutter to mute all display while maintaining access to projector functions. A closed shutter blanks the display (turns it to black) and reduces lamp power to 60% of the maximum rating for 4.5 and 6.0 kW lamps (or 75% for 2.0 and 3.0 kW lamps). Opening the shutter restores lamp power to its previous setting, and restores the image.

NOTES: ***1)*** *The status of the shutter is shown in the LCD display window at the rear of the projector.* ***2)*** *The shutter is open upon power-up.*

(Func) *Function Key*

IF WITHIN A MENU: Using the (Func) key for special tasks within the menu system is noted with the appropriate topic elsewhere in *Section 3*. For example, press (Func) in the *Channel Setup* menu to enable deletion or copying of a channel.

IF WITHIN A PRESENTATION: Press (Func) followed by a 2-digit number to enable a specific color or colors in the display (see right). For example, (Func) (6) (4) will display only red and green data, (Func) (6) (7) will display all color data. Eliminating one or more colors can help with certain diagnostics and setups, such as when accurately overlaying one image on top of another from stacked projectors.

[Func] [6] [1] = Red
[Func] [6] [2] = Green
[Func] [6] [3] = Blue
[Func] [6] [4] = Red & Green
[Func] [6] [5] = Green & Blue
[Func] [6] [6] = Red & Blue
[Func] [6] [7] = All Colors

NOTE: Color enabling can also be implemented from numerous locations within the menu system.

(Proj) *Projector*

Press (Proj) to access a specific projector within a group of projectors or to confirm if the local projector is listening. The number in the "Enter Number" window indicates which projector is currently listening to commands, and will match the projector number that has been defined in the *Menu Preferences* menu.

The "Projector" checkbox (read-only) shows whether or not the projector physically connected to a keypad is listening to commands from that keypad. A checkmark means that connected projector is listening; if there is no checkmark, you are communicating with a different projector.

To control a specific projector with the keypad, enter the 3-digit number assigned to the projector you want to use. If you switch to a projector other than the one you are currently using, the checkmark will disappear.

To broadcast to multiple projectors, press (Proj) and then (Proj) again ***without*** entering a projector number. Keypad commands will then affect all projectors present. Note that there is no method of controlling a *group* of projectors within the same wired configuration using the wired keypad exclusively, since there is only one wired protocol available.

*NOTES: 1) The "Broadcast Keys" option in the Communications menu must be selected for only **one** (any) projector in a serial network. The keypad in use must be OFF (disabled) for the remaining projectors. See also **2.14 Remote Keypad Protocols and Conversion**, and **3.8, Adjusting System Parameters and Advanced Controls.***

(↵) *Enter*

Press (↵) (or [Enter] on the standard remote keypad) to select a highlighted item, to toggle a checkbox, or to accept a parameter adjustment and return to the previous menu or image.

(Exit) *Exit*

Press (Exit) to return to the previous level, such as the previous menu.

NOTE: (Exit) does not save changes within text editing boxes (including number editing of a slidebar value) or within pull-down lists. It acts as a "cancel".

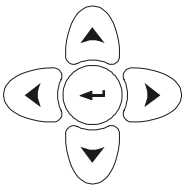

Arrow Keys

Use the ◀ ▶ keys to change a slidebar value or to select a different option within a pull-down list without having to first scroll through options. See also *Editing Text* later in *Section 3*.

Use the ▲ ▼ keys to navigate within a menu, pull-down list or text box. On the standard remote keypad, use the ▲ ON and ▼ OFF keys to force the corresponding state for power, shutter and OSD keys. See details provided on the back of the remote keypad.

PIP *PIP (Picture-in-Picture)*

*NOTE: **1)** Not available in v1.0 software. **2)** Can be used with two digital sources, or with one digital and one analog source. PIP of two analog sources is not possible. **3)** PIP performance may be limited by high frame rates.*

Press the PIP toggle to enable or disable the Picture-in-Picture function in which two images can be displayed at once. As desired, these images can be different from one another, or they can be duplicates. With at least one source connected, press PIP followed by the source desired for the secondary image (inputs 1-6). For example, press PIP Input 2 to add an image from a DVI source to your original display of an **INPUT 1** source. To display the secondary image from a different source, select one of the other input keys.

With Picture-in-Picture running, source image adjustments such as location and resizing affect the secondary image only. Swap the images (Swap) to access the current primary image. To remove the secondary image from the display, press PIP.

Swap *Swap*

Press Swap to swap the current picture-in-picture relationship so that the primary image becomes secondary, and the secondary image becomes primary.

*NOTES: **1)** This key is available on the "brick" Rental/Staging remote only. Alternatively, a swap can be accessed in the menu system. **2)** Requires PIP; not available in v1.0 software.*

Focus Zoom Shift *Lens Focus, Zoom and Shift*

Motorized lens controls are not available in this projector.

Backlighting

Press the "lightbulb" key to illuminate the keys on the remote without sending a command to the projector.

Remote keypad operating settings (protocols)

The standard IR remote keypad stores an operating setting called *protocol* in memory. In some applications, such as when you want to use multiple IR remotes to control different projectors independently, you may want to override the default keypad protocol set at manufacture (which is "A") for one of the remotes. See *2.14 Remote Keypad Protocols and Conversion* for complete instructions.

NOTE: In v1.0 software, only the IR protocol "A" is supported.

3.3 Power-up Procedure / Checklist

NOTE: This is a typical manual power-up procedure. Some installations may include an automation system that controls projector start-up and lamp ignition in conjunction with other variables such as lighting, audio and other equipment.

⚠ WARNING ⚠

Do not attempt operation if the AC supply and pedestal are not within the specified voltage range.

❑ 1. Make sure that ballast is properly configured for the AC at your site, and that it is connected via 4 cables to the projection head. See *2.8, Connecting the Ballast*.

❑ 2. Connect the heat extractor fan to the projection head. See *2.4, Installing a Lens, Lamp & Cooling*.

❑ 3. Connect the head to AC. The voltmeter on the back of the projector will indicate the incoming level of AC, and the main **PROJ STATUS** light on the rear of the projector should glow a steady yellow. At this point, the projection head will be in a stand-by mode with only light engine fans running.

❑ 4. Connect the ballast to AC. The 3-phase LEDs and voltmeter should light up.

❑ 5. Turn the ballast breaker switch to **ON**. The internal ballast fan should start up (note: there is no other indication of whether the ballast is on or not).

❑ 6. Press (Menu). The **LCD STATUS DISPLAY** at the rear of the projector will show a "Lamp Size" of 2000, 3000, 4500 or 6000 watts, depending on its last setting. Factory default=6000. Select the lamp that is currently installed—this should also be correctly indicated on a label on the lamp door—or continue if the correct lamp size is shown.

❑ 7. Press *and hold* (power) to turn the projection head on and ignite the lamp (or press (power) (▲), or (power) (power)). The large **PROJ STATUS** light on the rear of the projector should glow a steady green.

IF THE LAMP DOES NOT IGNITE:

- If a safety interlock switch is open (such as when the lamp door is ajar), the lamp cannot be struck. The **PROJ STATUS** light on the rear of the projector will be red, and the error will be indicated on the status display and LCD window.
- If the lamp fails to ignite even though the interlock system is OK, the projector will automatically re-try ignition using 100% of the maximum power acceptable for the installed lamp. If this re-try also fails, a new lamp is likely needed.

NOTE: For complete power-up troubleshooting, see ***Section 5, Troubleshooting****.*

❑ 8. In the *Lamp* menu, set "Cable Length (m)" to match the length of DC cables currently connected between your lamp ballast and projection head.

3.4 Power-down Procedure

NOTE: Describes a manual shut-down only. May be automated.

1. Do one of the following to turn the projection head and lamp off:
   - Press ⏻ ⏻
   - Or press *and hold* ⏻
   - Or press ⏻ ▼
2. All fans, including the heat extractor, will continue running to cool the lamp, and will shut off automatically when the internal temperature is cool enough.

⚠ WARNING ⚠

Make sure to wait for the cooling fans!

3. Turn the ballast breaker/switch **OFF**.

3.5 Navigating the Menus

Most of the controls for the projector are accessed from within the projector's menu system. There are several groups of related *functions*, with each group selectable as a menu item in the *Main* menu as shown at right. Press Menu at any time to display this *Main* menu.

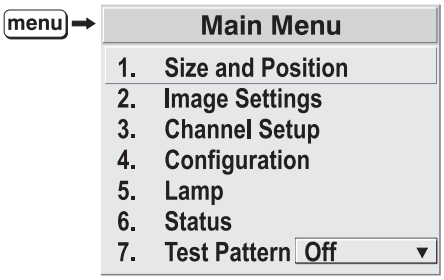

Figure 3.6. Entering the Menu System

On the remote keypad, either enter the number corresponding to the function menu you wish to access, such as 2 for the *Image Settings* menu. Or use the ▲ ▼ keys on any keypad to highlight the desired option, then press ↵. The corresponding function menu or pull-down list of further options will then appear.

With a function menu displayed, navigate in a similar manner—enter a menu option number for any numbered option, or use the ▲ ▼ keys to highlight the desired option, then press ↵ (Enter). Extra long menus have a scroll bar on the right—use the arrow keys to access the remainder of the menu. Locked items or items that do not pertain to the current action or condition appear dimmed and cannot be selected.

NOTES: ***1)*** *If there is no signal present, all source-dependent adjustments are disabled.* ***2)*** *After 15 minutes of inactivity, the projector leaves the menu system and returns to the presentation.* ***3)*** *The* ***Status*** *menu is read-only.*

When finished with a function menu, do one of the following:

- Press Exit to return to the previous screen
- Press Menu to leave the menu system and return to the presentation

On-line Help ' If at any time you are uncertain what to do next, press Help to display summary information about the current menu or highlighted option. Press Help again to exit. In addition, a line of "hint" text is included at the bottom of some menus.

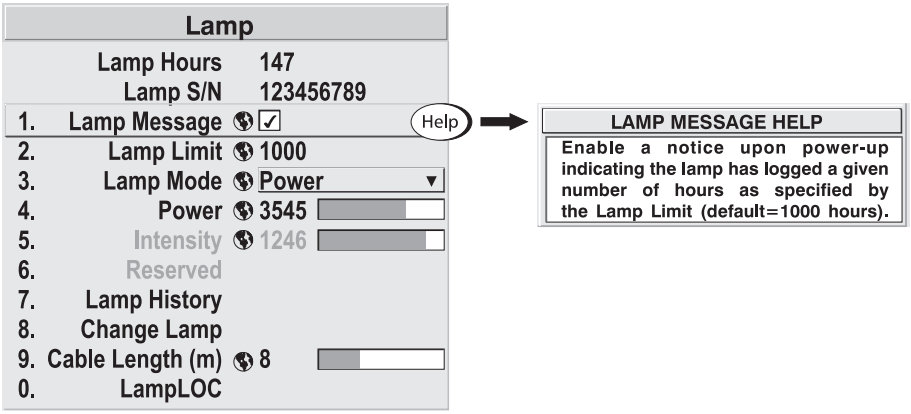

Figure 3.7. Context-sensitive Help

From presentation level, press Help to access general *Help Topics*. Scroll as necessary within a topic. Press Help or Exit to return to your presentation.

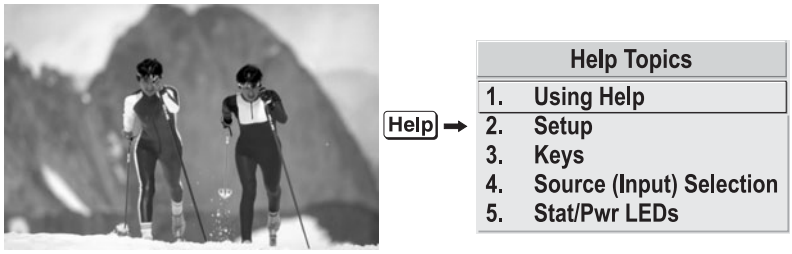

Figure 3.8. Accessing General Help Topics

Time-outs

If a slidebar, menu, or message is displayed, you have limited time in which to make a keypad entry before the projector returns to presentation level Help and the graphic disappears. These time-outs may vary depending on what is displayed.

The Global Icon

Menu options that include this icon apply universally to any incoming signal.

Using Slidebars and Other Controls

Most of the function menus allow you to change settings by using slidebars, checkboxes, and pull-down lists. To select a slidebar, toggle a checkbox status, or view a pull-down list, do one of the following within the function menu:

- Enter the menu option number corresponding to the setting you wish to change (for example, press 1 3 to select Vertical Stretch in the *Size & Position* menu).
- Or move the highlight to the option desired and press ↵ (Enter).
- Or move the highlight to the option desired and press ◀ ▶ to adjust immediately.
- Or bypass the menus entirely and use a single key to immediately access an adjustment during your presentation (*NOTE: applies only to options having their own key, such as Contrast, Brightness, Gamma, etc.*).
- For “blind” access, hide the entire menu system (see OSD key, above) and/or direct slidebars activated by their own key (such as Contrast, Brightness, etc.). Control by using the proper keypress or numerical sequence of key presses.

Once selected, change the setting as desired (see below) and press ↵ to save and return to the current function menu.

Slidebars in menus – The current value for a given parameter, such as size or vertical stretch, appears to the left of its slidebar icon (adjustment window). This number often expresses a percentage, or it may have units associated with it (such as pixels, degrees Kelvin, etc.), depending on the specific option. Press ◄ ► to gradually adjust the setting up or down—both the number and the length of the bar change accordingly. Hold for continuous adjustment. Or press ↵ to activate a slidebar text box for specific number entry via the keypad, then press ↵ to save (or press Exit to cancel).

Filter 5

"Direct" slidebars - For quick access, you access Gamma, Brightness, and Contrast slidebars without traveling the menu system. For example, simply press Cont to immediately display the same contrast slidebar accessed with the **Contrast** option in the *Image Settings* menu.

Use the arrow keys to adjust a direct slidebar, or press ↵ and enter a specific number from the keypad , then ↵ or ◄ or ► to save (or Exit to cancel). When you are done, press Exit to save and return to your presentation.

NOTES: ***1)*** *You can still adjust a direct slidebar as usual if the display is turned off (see* OSD *or* ***Menu Preferences*** *menu) — the slidebar just won't be visible.* ***2)*** *A direct slidebar disappears if it is not used within 5 seconds.*

Checkboxes - Conditions are present if its adjacent checkbox contains a checkmark. To toggle the checkbox, simply highlight and press ↵, or highlight and use ► to check and ◄ to uncheck. If a checkbox is numbered, simply enter its number to immediately toggle the checkbox.

5. Broadcast Keys ☑

Pull-down lists – To see a pull-down list of options available for a given parameter labeled with a ▼, you can:

- Highlight it and press ↵ (Enter)
- Or enter the menu option number.

Use ▲ or ▼ keys to navigate up and down within the list (the current choice is noted with a small '). Press ↵ to choose an option from the list, if desired.

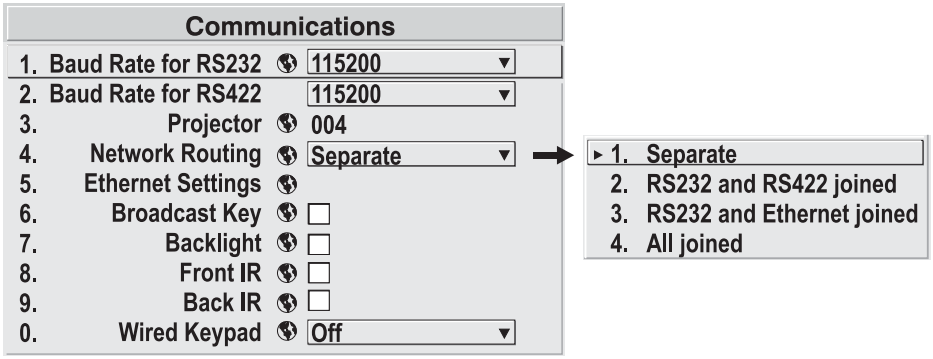

Figure 3.9. Example of Pull-Down List

Or, if you prefer to quickly scroll through a list without first pulling it down, highlight the option and use ↵. Press ↵ when the desired choice appears.

*NOTES: **1)** Press ◄ or ► to jump between pages in an extra long pull-down list. **2)** Press Exit while in a pull-down list to **cancel** any change.*

Editing Text

ACTIVATE THE EDIT WINDOW: To enter or edit text, highlight the desired parameter (such as a channel name) and press ↵ to activate its adjacent edit window. Any previously entered text is displayed with its first character highlighted in a square cursor, signifying that this character is ready for editing.

NAVIGATE WITHIN THE EDIT WINDOW: Press ► to move the cursor forward or ◄ to move the cursor backwards as desired.

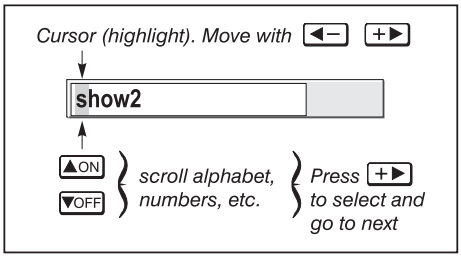

Figure 3.10. Entering Text

EDIT A CHARACTER: To edit a highlighted character, use ▲ and ▼ to scroll through the alphabet, numbers, spaces and punctuation available. When the character you need appears, press ► to select it—the cursor will move to the next character of current text, if present. Note that you can also enter a number directly from the keypad—it will be accepted and the cursor will move on.

ADD OR DELETE A CHARACTER OR SPACE: To insert a space at the cursor location, press Func ►. To delete a highlighted character (or space), press Func ◄.

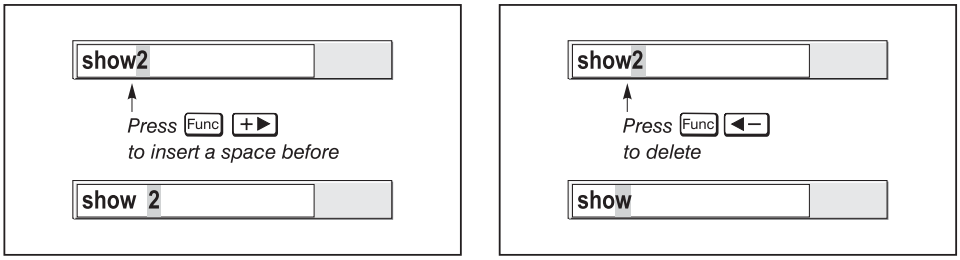

PRESS ↵ (ENTER) WHEN FINISHED: To accept edits and leave the edit window, press ↵ (Enter).

NOTE: Press Exit at any time to cancel changes and return to the previously-defined text.

Editing Numerical Values

Enter numbers directly from the keypad in order to specify numbers representing projectors, channels (source setups), or slots. As each digit is entered, it is displayed and the cursor moves on. Note that channel numbers are defined with 2 digits—for example, if you enter only a single digit (such as “7”) for a channel number, the channel will automatically be defined as “07”. Enter “07” to utilize this channel.

NOTES: 1) Once you enter the first digit, this digit replaces all old digits. 2) If you press any non-numbered key, the number entered up to that point is accepted and updated as the new value. 3) Press Exit to cancel editing of numerical values.

3.6 Using Inputs and Channels

*NOTE: See **Section 2, Installation and Setup**, for a full explanation of how to connect sources to the projector.*

The projector stores and automatically recalls up to 50 different channels (source setups) for a variety of inputs. This memory feature allows you to define and conveniently use a wide variety of customized setups rather than having to repeatedly re-configure the projector for different presentations. Depending on what you have defined, each physical source connection (i.e., input at the projector) can have several different channels associated with it.

Do I Select an Input Or a Channel?

INPUT – An input is a source physically connected at the projector. Input describes the source signal according to which *input slot* it is connected.

SWITCH TO AN INPUT IN EITHER ONE OF TWO WAYS – Pressing the appropriate direct key — Input 1, Input 2, Input 3, Input 4, Input 5 or Input 6 — is a quick and seamless way to display from one of the six inputs connected at the side of the projector. Or press Input and enter the number (1, 2, 3, 4, 5, 6, 7 or 8) corresponding to the location of the desired signal (on-screen feedback is provided). With either method, the image will be displayed according to the following:

If it is the first time you have used the source/input (or if you used the input but did not define a channel by adjusting anything), the projector will recognize the new input signal based on its frequencies and polarities, and will automatically display an image according to default settings for such a signal. In general, the image from the new source will be as large as possible without losing its aspect ratio. This and other default image settings depend on the incoming source.

If you used the source once before and changed a display parameter such as contrast, V-Position, etc., then a channel was automatically created and still exists in projector memory (see below). Using an Input key will automatically recall this channel—and all its setup parameters—and update the display accordingly.

If more than one channel exists for the input, the image will be displayed according to the setup parameters for the first channel with matching characteristics.

*NOTE: Inputs 7 and 8 require the **Dual SD/HD-SDI** module in either of the projector's option slots. For their selection, see also **3.2, Using the Keypads**.*

CHANNEL - A channel is a collection of measurements, locations and settings that tailor the display of a signal to your specific needs. Since source types and applications can vary greatly, you will likely want to adjust and define a wide variety of parameters, such as brightness, contrast, size, etc., in order to customize and optimize the display from or for a particular source. For example, the display settings you choose for a VCR source may be very different from those you choose for a high resolution computer source, or one signal may simply vary from another signal used previously through the same input location. Once you have adjusted a display parameter, such as pixel tracking or contrast, all current settings are collectively stored in the projector's memory as a unique 2-digit channel, such as 0 9. You can have numerous distinct channels available for the same input, any of which can be selected by using the Chan key on the keypad followed by the 2-digit channel number.

Shown at right is a sample channel list as would be available from Chan. This is typically called the *channel list*.

NOTE: The Chan *key may display a channel list or not, depending on what you have defined for "Display Channel List" (see* ***Menu Preferences*** *later in this section).*

In order to access channels by using Chan on the keypad, you must first create the channels. See below.

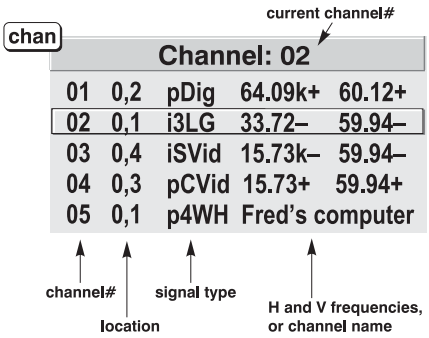

Channel List

Creating a New Channel
– AUTOMATIC –

To use a new source with the projector, a new channel must be added to projector memory so that the projector will respond properly to an input signal from that source in the future. A new channel can be created automatically, as described here, or it can be copied from an existing channel and then edited as necessary (see *Copying or Deleting Channels* later in this section).

When you select a direct input (Input 1, Input 2, Input 3, Input 4, Input 5 or Input 6), any existing channels in the projector are searched for matching input and signal parameters. If no match to the incoming input signal is found in currently-defined channels, a new channel is temporarily created based on factory-defined defaults for this type of signal. The *channel number* assigned is the lowest available number from 01-50.

NOTES: ***1)*** *An automatic channel will be discarded unless one or more of its parameters are changed, and will not appear in the channel list (see below).* ***2)*** *If two channels have the same distinguishing source characteristics except for the reversal of sync connectors (i.e., H-sync and V-sync, are switched), they are still defined as distinct channels.* ***3)*** *You cannot define a new channel without an incoming signal.*

If the incoming signal *does* match an existing channel, the image will be set up and displayed as usual according to the parameters currently defined for that channel.

USING A CHANNEL: You can normally select a channel at any time by pressing Chan (see right). If you want to prevent a channel from appearing in this list, you must edit the channel as described in *Channel Edit* later in this section. Such a channel can still be selected by entering its number as shown at right.

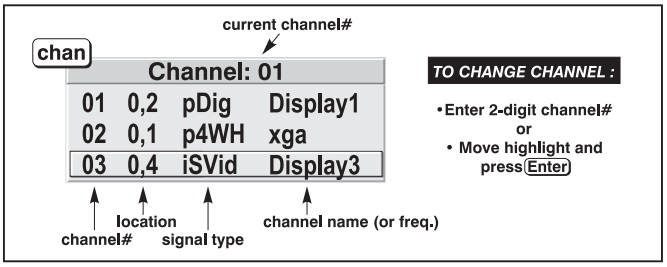

NOTES: ***1)*** *The current channel is highlighted upon entering the channel list, or, if this channel is not displayed here, the first channel in the list is highlighted.* ***2)*** *Channels created automatically do not appear in the channel list unless a parameter for the channel has been changed.*

What Channels Are Defined So Far?

All available channels are listed in the *Channel Setup* menu, which describes how each channel can be accessed and which serves as the gateway for editing, copying and deleting channels.

From the presentation level press Menu to display the *Main* menu. To display the *Channel Setup* menu, press 3, or move the highlight to the *Channel Setup* option and press Enter. The *Channel Setup* menu will appear (see sample at right), with the active channel highlighted.

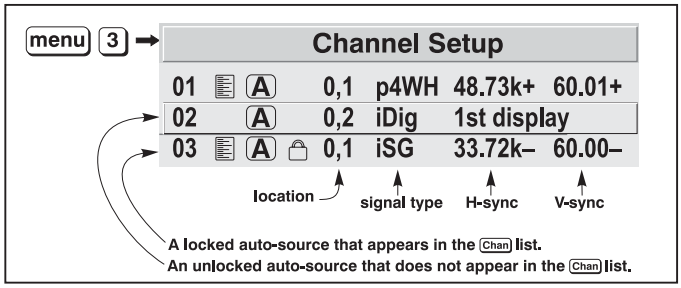

Figure 3.11. All Channels Appear in the Channel Setup Menu

WHAT APPEARS IN CHANNEL SETUP MENU? This menu lists all channels defined so far and indicates where (01-08) they connect on the projector's side input panel. The far left column lists channel numbers currently defined. The values in the far right columns indicate horizontal and vertical frequencies—if someone has defined a name for this channel, it appears here instead. Remaining columns contain details pertaining to each channel setup, such as its switcher number (always 0 = projector), slot location, a variety of icons indicating access to each channel, and an abbreviated description of each signal type. See *Editing a Channel Setup* for details.

NOTE: If you have more than a handful of channels, use ◄– and +► to see the remaining channels not visible in the initial display of channels.

SIGNAL TYPE — Either channel list, whether the Chan key list or the *Channel Setup* menu, identifies signal types in a shortened form as defined below. These descriptors indicate what signal information the projector uses to identify a match for a given channel, and are preceded by either an "i" (interlaced signals) or "p" (progressive signal"). See Table 3.2.

Table 3.2. Abbreviations for Signal Type

Abbrev.	Signal Type
4WH	Composite (4 wire) on HC input
4WV	Composite (4 wire) on V input
SG	Sync-on-green
5W	Separate H,V
5WR	Separate H,V swapped
SVid	S-Vid
CVid	Composite Video
Dig	Digital

FUNCTIONS WITHIN THE CHANNEL SETUP MENU —To copy, delete or edit a channel, highlight the desired channel in the *Channel Setup* menu and do one of two things:

- Press Func if you want to copy the selected channel or delete this or other channels. See *Copying or Deleting a Channel* below.

- Press Enter if you want to edit channel setups (i.e., non-image related parameters) for the selected channel. See *Editing a Channel Setup*, below.

Copying or Deleting Channels

TO COPY A CHANNEL, highlight the desired channel in the *Channel Setup* menu, then press Func to go to the *Channel Copy/Delete* submenu. Select "Copy" and press Enter—a new channel will be created. It is identical to original, which still remains, but it is identified with the next available number from 01-50. If you change your mind and do *not* want to copy the current channel, press Exit to cancel and return to the previous menu. Copying channels is a quick method for creating numerous channels, each of which can then be edited and adjusted for a variety of presentations in the future.

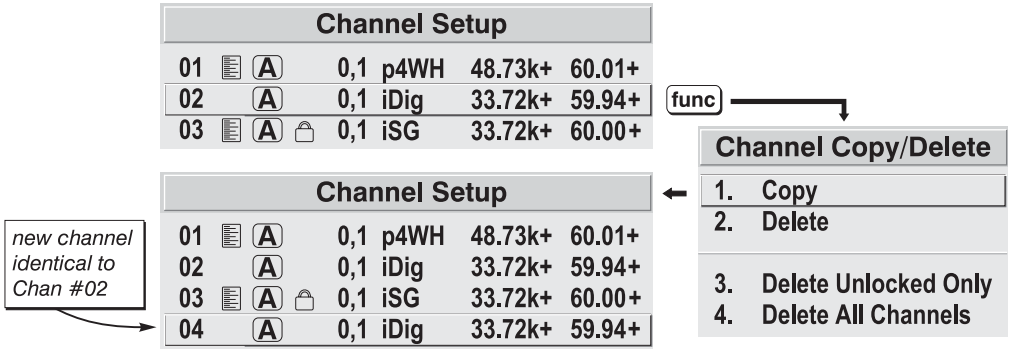

Figure 3.12. Copying A Channel

TO DELETE A CHANNEL, highlight the desired channel in the *Channel Setup* menu, then press Func to activate the *Channel Copy/Delete* submenu. Select "Delete" and press Enter—a confirmation window will appear to make sure that you really want to delete this channel.

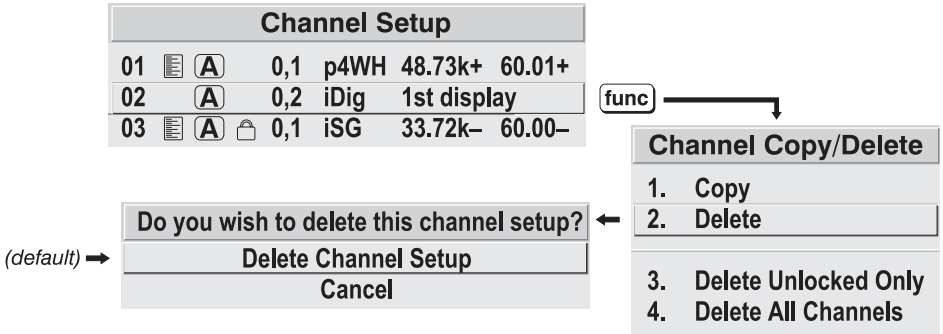

Figure 3.13. Deleting a Channel

TO DELETE MULTIPLE CHANNELS, highlight any channel in the *Channel Setup* menu and press Func to go to the *Channel Copy/Delete* submenu. Select "Delete Unlocked Only" and press Enter to delete all unlocked channels. Or select "Delete All Channels" to delete all channels, even those that are locked. In either case, the current channel will remain but will be redefined from projector defaults.

NOTE: For any deletion, a confirmation box appears to make sure that you really want to delete. Select "Cancel" (default) if you don't want to delete after all.

Editing a Channel Setup

The basic setups that describe how and where a channel can be accessed are listed in the *Channel Setup* menu. These channel setups can be edited at any time in the *Channel Edit* submenu.

CHANNEL EDIT — STEP 1 From the presentation level press Menu to display the main menu. To display the *Channel Setup* menu, press 3, or move the highlight to the *Channel Setup* option and press Enter. The *Channel Setup* menu will appear.

CHANNEL EDIT — STEP 2 To edit parameters shown in the *Channel Setup* menu, select the relevant channel and press Enter. The *Channel Edit* menu will appear similar to the sample shown in Figure 3.14.

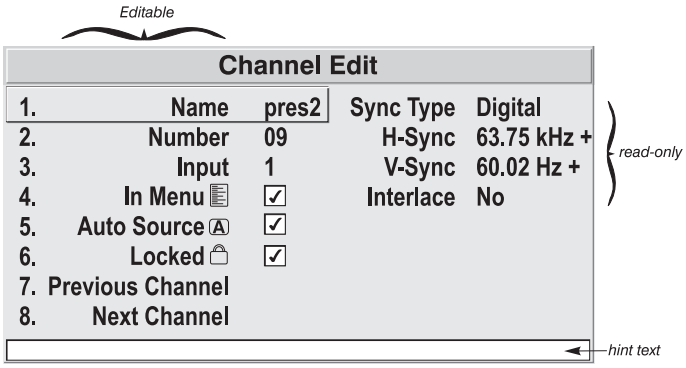

Figure 3.14. Channel Edit Menu (SAMPLE)

CHANNEL EDIT — STEP 3 If desired, review and/or edit the following channel setups in the *Channel Edit* menu:

- **CHANNEL NAME:** An alpha-numeric label can be defined and/or changed here. Channel names can be up to 12 characters in length.
- **CHANNEL NUMBER:** A 2-digit channel number can be changed here. *NOTES:* ***1)*** *If you enter a channel number that already exists, a dialog message appears indicating that this number is already in use–assign a different channel number.* ***2)*** *You can define up to 50 channels.*
- **INPUT:** 1-8, corresponding to where on the projector's input panel the source is connected.
- **IN MENU:** If checked (default, except for automatically defined channels with unchanged parameters), this defined channel will then appear in the list available when Chan key is pressed. If unchecked, the channel must be accessed via Chan on the keypad or via the Auto Source function. *NOTE: On-screen display of the channel list is an option that must be set in the* ***Menu Preferences*** *menu.*
- **AUTO SOURCE:** If checked, (default), the projector can automatically locate this channel when an incoming input signal matches. If not checked, the projector can locate the selected channel only when it is directly selected via Chan on the keypad—and a change in input signal will *not* result in a channel change.
- **LOCKED:** If checked, all of the image settings for this channel are disabled. If unchecked (default), all available image settings can be adjusted as desired. You cannot use Auto Setup with a locked channel.
- **PREVIOUS CHANNEL:** Select this option to see or change *Channel Edit* settings for the previous channel in the *Channel Setup* list.
- **NEXT CHANNEL:** Select this option to see or change *Channel Edit* settings for the next channel in the *Channel Setup* list.

3.7 Adjusting the Image

The most commonly used options for image adjustments are accessed through two menus: *Size and Position* (Menu 1) and *Image Settings* (Menu 2), both of which appear in the *Main* menu. From either of these two menus, you can change settings affecting the image from the current channel by working with the appropriate slidebars, checkboxes and pull-down lists. Exit will return to the previous menu (or to the presentation, if from the *Main* menu) and accept any changes you may have entered. Settings are saved with the current channel.

From your presentation, you can access any of the individual options in these menus by pressing Menu followed by the appropriate two-digit number representing their location in the menu system. For example, press Menu 2 3 to quickly access the "Gamma" option in the *Image Settings* menu.

Note that for certain options, you may prefer to use a "direct key" from presentation level to go directly to a particular option without traveling through the menu system (*note: available for certain display parameters only*). For example, press Cont to access the "contrast" slidebar immediately. Press Exit to return to your presentation.

NOTES: ***1)*** *To hide these "direct" slidebars, disable the" Display Slidebars" checkbox in the* ***Menu Preferences*** *menu.* ***2)*** *To hide the entire menu system from view, toggle the on-screen display by pressing the* OSD* *key.*

Before You Begin

Use Auto Setup (Auto Setup)

For a good and efficient first step in perfecting the image, press Auto Setup. This initiates an automated process in which the projector quickly optimizes critical display parameters such as size, position, pixel tracking, etc., based on the type of incoming source data detected. An *Auto Setup* can save considerable setup time, and you can still modify the adjustments as desired using menu options described below.

Size and Position Menu

In the *Size and Position* menu, you can increase or decrease the size of your image, change its proportion (aspect ratio), move the image to a specific area of the screen, and refine other related parameters. Use *Size and Position* controls to match the image precisely to the screen used at the site.

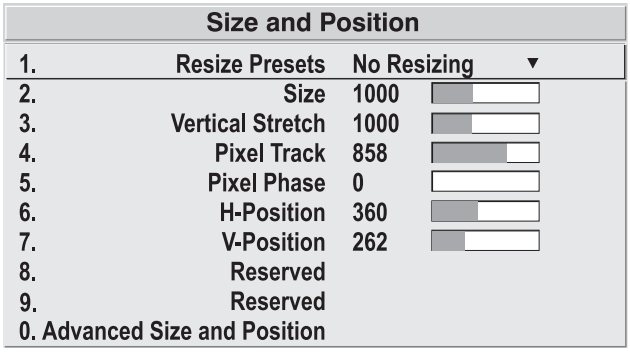

Refer to *"Using Slidebars and Other Controls"* (earlier in this section) if you need help using any of the options and controls. Changes made in the *Size and Position* menu are applied immediately and are saved when you exit the menu (press Exit or Menu).

Resize Presets

Select a *Resize Presets* option to quickly display an image in its native resolution or to automatically resize an image to closely fill the projector's native resolution of 2048 x 1080, or to optimize the width or height of your display. *Size*, *Position* and *Blanking* parameters will automatically adjust accordingly. Or, if Blanking is set first, which defines an Active Input Area, *Resize Preset* scaling will occur in this region of interest only. Resizing options are explained in detail below.

Resize Presets	
1. Default	= maximize for current source
2. No Resizing	= display in native resolution
3. Full Size	= fill the screen (regardless of source)
4. Full Width	= fill display width & keep aspect ratio
5. Full Height	= fill display height & keep aspect ratio
6. Anamorphic	= retain 16:9 aspect ratio
Custom (not selectable)	= non-preset values for *Size, Vertical Stretch, H-Position, V-Position and/or Blanking*

WHAT IS THE RESIZING DEFAULT? By default when displaying a new source, your image will utilize as much of the projector's display area (2048 x 1080) as possible for the type of incoming source data, but with minimal changes to aspect ratio. For most sources (which are of a more "square" aspect ratio than that of the projector), this means height will be maximized to approximately 1080 and the image will be centered between black side bars. See *Select "Default"* below.

WHEN "CUSTOM" APPEARS: The "Custom" re-size descriptor automatically appears in the *Size and Position* menu when any of the values for *Size*, *Vertical Stretch*, *H-Position*, V-*Position* or *Blanking* do not correspond to those for a preset. This option is not offered in the *Resize Presets* pull-down list.

- Select **"DEFAULT"** for most sources (factory default). The image will be centered and displayed as large as possible *depending on the type of source*, as described below:

  - ✓ ***A graphic image*** will enlarge to fill the screen height, and be centered between black side bars.
  - ✓ ***A video image*** will enlarge to fill the screen height, and be centered between black side bars.
  - ✓ ***An anamorphic (16:9) image*** will fill the height and slightly stretch horizontally to fill the small amount of display area remaining on both sides.

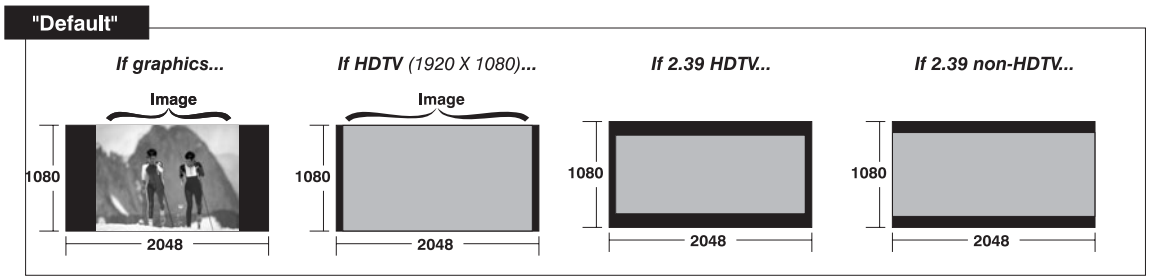

- Select **"NO RESIZING"** to display the image in its native resolution, which is probably smaller than the projector's 2048 x 1080 resolution. For example, for a source with a native resolution of 800 x 600, "No Resizing" will center a small image within a black border—the black border areas are unused areas. See below.

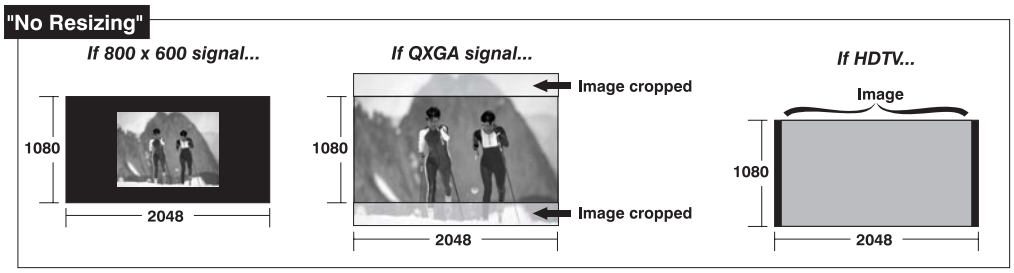

- Select **"FULL SCREEN"** to use *all pixels* (2048 x 1080) for displaying the image, regardless of source or original aspect ratio. See right.

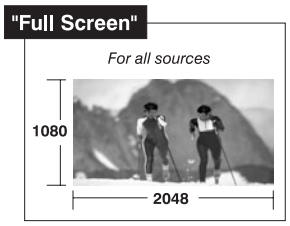

- Select **"FULL WIDTH"** to fill the projector's display from left-to-right without changing the original aspect ratio of the image. Depending on the source, data at the top and bottom may be discarded (cropped), or the display may have black borders at the top and bottom. See below.

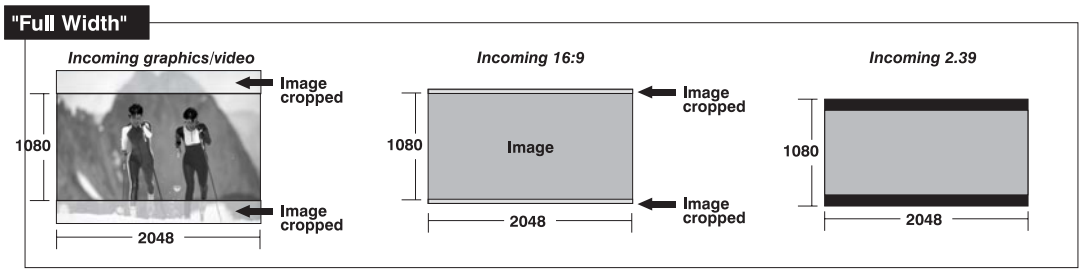

- Select **"FULL HEIGHT"** to fill the display from top-to-bottom. Depending on the source, this may create borders.

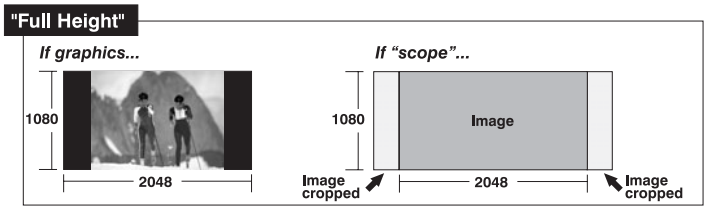

- Select **"ANAMORPHIC"** to display an anamorphic image in its native 16:9 aspect ratio. The image will fill the screen from top-to-bottom, and be centered between narrow black bars on each side.

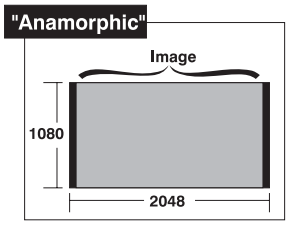

Size

Size controls both the image *width* and *height* in tandem, maintaining the current aspect ratio (proportion) of the displayed signal data.

Vertical Stretch

Vertical stretch adjusts the *height* of the image while keeping the width constant. Use *Vertical Stretch* to change the aspect ratio of the display.

Pixel Track

Steady flickering or several soft vertical stripes or bands across the entire image indicates poor pixel tracking. Proper pixel tracking helps ensure that the image quality is consistent across the screen, that aspect ratio is maintained, and that pixel phase can be optimized (described below). Tracking determines the frequency of the pixel sampling clock, indicated by the number of incoming pixels per line, so that all pixels generated by a particular source are sampled.

NOTE: By default, the projector samples at the correct frequency for most sources.

For best results, use a good test pattern such as a smooth gray consisting of a clear pattern of black and white pixels, or a similar “half on, half off” graphic image, such as the *Windows* shutdown screen. Adjust the slidebar until the vertical stripes broaden to the point where one large stripe fills the image. If the image still exhibits some shimmer or noise, adjust *Pixel Phase* (below).

Pixel Phase

NOTE: Adjust Pixel Phase ***after*** *Pixel Tracking.*

Adjust pixel phase when the image (usually from an RGB source) still shows shimmer or “noise” after pixel tracking is optimized. Pixel phase adjusts the phase of the pixel sampling clock relative to the incoming signal.

For best results, use a good test pattern such as a smooth gray consisting of a clear pattern of black and white pixels, or a similar “half on, half off” graphic image, such as the *Windows* shutdown screen. Adjust the slidebar until the image stabilizes and each pixel is clearly defined. You may notice that you can stabilize the image at more than one point—i.e., you may find that the image appearance at "11" is identical to the image appearance at "38", thus you can use either setting.

If some shimmer from a video or HDTV source persists, use the “Filter” control to remove high-frequency noise from the signal.

H-Position

This option moves the image right or left within the area of available pixels.

NOTE: The value shown represents where the approximate center of the image lies in relation to the total number of pixels available horizontally. This varies widely according to the signal—watch the image while adjusting.

V-Position

This option moves the image up or down within the area of available pixels.

NOTE: The value shown represents where the approximate center of the image lies in relation to the total number of pixels available vertically. This varies widely according to the signal—watch the image while adjusting.

Swap PIP Images

(SHORT CUT: Press [Swap] on the standard *Roadie 25K* remote.)

Toggle the current picture-in-picture relationship so that the primary image becomes secondary, and the secondary image becomes primary. Swapping is available only when PIP is enabled. *Note: Not available in v1.0 software. Shown as “Reserved”.*

PIP Enable

Toggle to display from two sources at once (picture-in-picture) or the primary source only. This checkbox turns the secondary source on and off in the display. *Note: Not available in v1.0 software. Shown as "Reserved".*

Advanced Size and Position — SUBMENU

This submenu consists of the following options:

Advanced Size & Position		
	Active Input Window	720x483
1.	Top Blank	0
2.	Bottom Blank	0
3.	Left Blank	0
4.	Right Blank	0
5.	Plug & Display (EDID)	1280x1024x60Hz ▼

ACTIVE INPUT WINDOW: This read-only value indicates the current size (i.e., area) of your displayed data or "region of interest" as defined by the blanking controls. For example, if you have blanked (cropped) 100 pixels from both the left and right edges of an incoming source of 2048 x 1080, the remaining active input window will be 1848 x 1080. When using a video source at **INPUT 3** or **INPUT 4**, the default blanking of "0" defines an active input window of 720 x 483.

BLANKING (TOP, BOTTOM, LEFT, and RIGHT): Crop the image as desired so that unwanted edges are removed from the display (changed to black—see right). Blanking defines the size of the *Active Input Window*, creating an area of interest. Range of adjustment depends on the source resolution and other factors for your application.

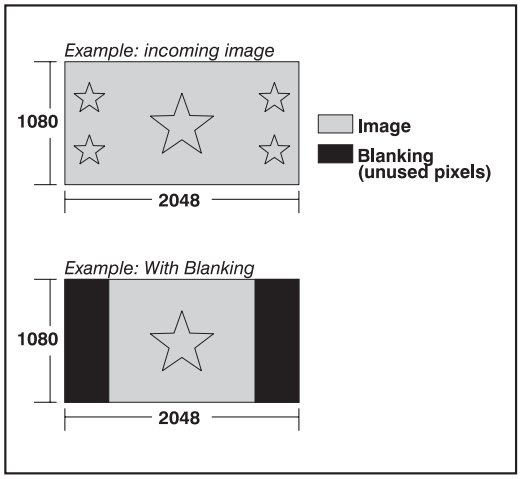

PLUG & DISPLAY (EDID): By default, a *Plug & Play (EDID)* source outputs a signal according to the EDID information provided by the projector. To override this information and display in a different format (for example, if your *Plug & Play [EDID]* device does not support the projector's resolution and/or frequency), select the desired *Plug & Play (EDID)* resolution from the list.

Any daisy-chained projectors will also display according to the chosen *Plug & Play (EDID)* format.

EDID = Extended Display Identification Data standard.

1. 1024x768x60Hz
2. 1024x768x120Hz
3. ▸ 1280x720x60Hz
4. 1280x1024x60Hz
5. 1280x1024x105Hz
6. 1400x1050x60Hz
7. 1600x1200x45Hz
8. 2048x1080x60Hz
9. 1080i 60Hz
0. 720p 60Hz
480p 60Hz
1080p 60 Hz
1080p 50 Hz
1080p 24 Hz

Image Settings Menu

Use options in the *Image Settings* menu to alter your image without affecting its size or position. Changes made to the *Image Settings* menu are applied immediately and are saved when you exit the menu (press Exit or Menu). Options not available for the projector model or source are disabled and appear dim (grey).

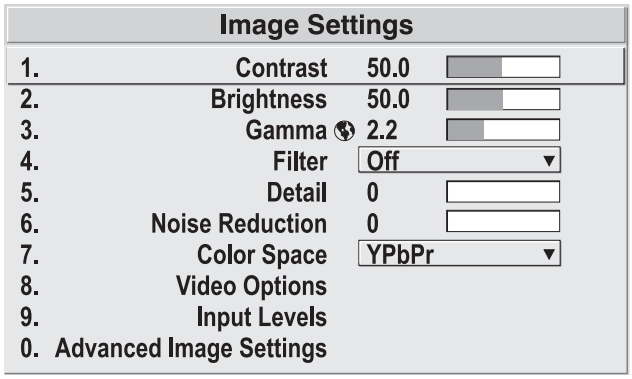

Contrast

(***SHORT CUT:*** Press Cont and adjust the slidebar.)

"Contrast" increases or decreases the perceived difference between light and dark areas of your image (0-100). For best results, keep close to 50. If contrast is set too high, the light parts of the image lose detail and clarity. If set too low, the light areas will not be as bright as they could be and the overall image will be dim. For best results, start with a low value and increase so that whites remain bright but are not distorted or tinted, and that light areas do not become white (i.e., are "crushed").

NOTE: If the environment lighting changes, an adjustment of ***Gamma*** *is recommended (see below).*

Brightness

(***SHORT CUT:*** Press Bright and adjust the slidebar.)

"Brightness" increases or decreases the amount of black in the image (0-100). For best results, keep close to 50. Start with a high value and decrease so that dark areas do not become black (i.e., are "crushed"). Conversely, high brightness changes black to dark gray, causing washed-out images.

Gamma

"Gamma" is a global setting that determines what gray shades are displayed between minimum input (black) and maximum input (white) for all signals. A good gamma setting helps to optimize blacks and whites while ensuring smooth transitions for the "in-between" values utilized in other colors. Thus, unlike brightness and contrast settings controls, the overall tone of your images can be lightened or darkened without changing the extremes, and all images will be more vibrant while still showing good detail in dark areas.

The normal gamma setting of 2.2 is correct for virtually all signals and conditions. If excess ambient light washes out the image and it becomes difficult or impossible to see details in dark areas, lower the gamma setting to compensate. This will improve contrast while maintaining good details for blacks. Conversely, if the image is washed out and unnatural, with excessive detail in black areas, increase the setting. Again, good gamma improves contrast while maintaining good details for blacks.

Filter

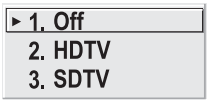

The proper filter setting is automatically set for virtually all signals, and rarely needs to be changed. It applies a low pass filter for noise reduction in the incoming input signal, particularly for HDTV or SDTV. Applied in the analog domain before sampling, this filtering removes high frequencies and thus reduces pixel phase noise (note this also reduces signal bandwidth). Override only if standard pixel tracking and phase adjustments do not adequately clear up a "noisy" video signal, or if a graphics signal appears overly "soft". Both instances indicate that "Filter" may be set to the wrong option.

Detail

"Detail" adjusts the sharpness of a video image so that edges remain clearly defined. It can be particularly useful if a significant "Noise Reduction" adjustment has caused the image to appear too soft. Adjust until the display is as sharp as desired, keeping in mind that because "Detail" adds some high frequencies back into the image, it can also re-introduce a certain degree of noise.

Noise Reduction

Noise reduction is similar to the "Filter" control, but operates in the post-sampling digital domain with a more subtle effect. Higher settings are most useful for clearing up noisy RGB images such as those from a PC. Adjust as desired, keeping in mind that reducing noise (which reduces high frequencies) may also soften the image.

Color Space

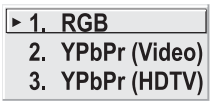

"Color Space" determines how the color components of an analog input signal connected to **INPUT 1, INPUT 2, INPUT 5** or **INPUT 6.** are decoded for accurate color in the display. Although color space for these analog signals is automatically determined by the projector, in some circumstances you may wish to override this and manually set a specific color space.

NOTE: For digital signals or for signals connected to **INPUT 3** *or* **INPUT 4**, *the color space function is entirely automatic and the pull-down list disabled.*

The current color space appears in the *Image Settings* menu. Press ENTER to select a different option:

- Select **RGB** *unless* you are using component video at **INPUT 1, 2, 5** or **6.**
- Select **YPbPr (Video)** with a standard definition televised signal (SDTV)
- Select **YPbPr (HDTV)** with a high definition televised signal (HDTV).

NOTE: When certain RGB signals are first connected, the projector may not initially recognize them as RGB and will incorrectly decode their color information as YPbPr (video). These signals can include:

- *RGB signals in NTSC, PAL, SECAM frequency ranges*
- *Scan-doubled sync-on-green*
- *Scan-quadrupled sync-on-green*

For these signals, change the Color Space to RGB, then define a new channel for future use.

Video Options — SUBMENU

This submenu is used with video sources only (Inputs 3 or 4).

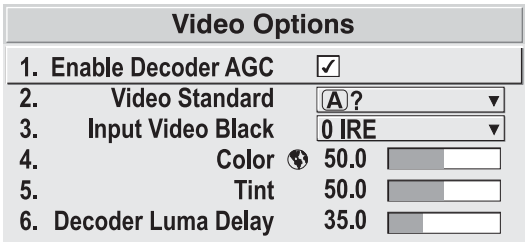

ENABLE DECODER AGC: Automatic Gain Control affects decoded video images only. Enter a checkmark (default) in most instances—this activates the decoder's AGC circuit to ensure properly bright images. Delete the checkmark if a decoded video image exhibits strange color artifacts such as stripes in highly saturated colors, indicating an incompatibility between this source and the AGC.

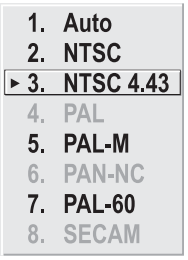

VIDEO STANDARD: For all but the more unusual video standards available in the world, the projector automatically detects the incoming horizontal and vertical frequencies and sets the projector's processing of this signal to the corresponding standard. The current video standard name appears in the *Video Options* submenu, and includes an "A" if it has been auto-detected. Press [ENTER] to view or select a different video standard from those available to the projector—any that are disabled have frequency characteristics that differ from those of the incoming signal. Selecting a specific standard forces the projector to process the signal according to this standard.

Table 3.3. Regions and Video Standards: Summary

Standard	Where Used (SUBJECT-TO-CHANGE)
NTSC	N. America and Japan
NTSC 4.43	A tape-only standard for partially-translated hybrid signals
PAL	Most of Europe, China, Australia, some of S. America, some of Africa
PAL-M	Brazil
PAL-NC	Argentina, Chile, other Latin American countries
PAL 60	
SECAM	France, Eastern Europe, most of Africa

NOTE: Generally, use "Auto" for all instances EXCEPT: 1) a poor quality input signal or 2) a black-and-white video signal. In order to detect and display such signals, select the relevant standard from the list.

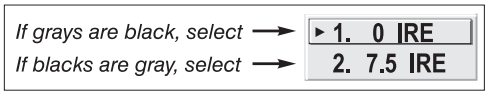

INPUT VIDEO BLACK — This control compensates for incoming elevated black levels present in certain video signals, and ensures that blacks in the display are neither crushed (i.e., where dark grays appear black) nor excessively elevated (i.e., where blacks appear dark gray). By default, the projector automatically determines the best setting according to the type of incoming video signal:

- **0 IRE** – Used for DVD output with "enhanced black", SECAM, most PAL standards, and Japanese NTSC.
- **7.5 IRE** – Used for most NTSC video signals.

For some types of video, you can override the setting. The control is disabled for other types of video (and all graphics sources). Generally, if black appears crushed when brightness = 50, choose “0 IRE”. If black appears excessively elevated, use “7.5 IRE”.

COLOR — This slidebar adjusts the color saturation level, i.e. the *amount* of color in a video image. Lower settings produce less saturated colors — for example a setting of “0” produces a black and white image. If the color level is too high, colors will be overpowering and unrealistic.

TINT — This slidebar adjusts the red/green color hue for true color reproduction of video and HDTV signals connected to Input 3 or 4. For best results, adjust tint while displaying an external test pattern—otherwise, it is recommended that tint remain at its default setting.

DECODER LUMA DELAY – This control affects any incoming composite or S-video signal, delaying the luma signal (intensity) in relation to the chroma (color). In the image, increasing the luma delay will move luma (seen as a shadow where colors overlap) to the right slightly, with colors remaining in place. Decreasing this delay will move the shadow slightly to the left. If necessary for your current source, adjust so that no shadows occur with adjacent colors.

Input Levels — SUBMENU

NOTES: ***1)*** *Because the projector automatically optimizes input levels for all but the most unusual of sources, it is recommended that only experienced users use the* ***Input Levels*** *submenu.* ***2)*** *Before beginning, check that overall contrast and brightness settings are near 50* ***and*** *that color temperature is properly set up on an internal grayscale test pattern.* ***3)*** *There must be at least 2 consecutive white pixels present in the image for proper “Auto Input Level” function. Leave this control* ***off*** *after use.*

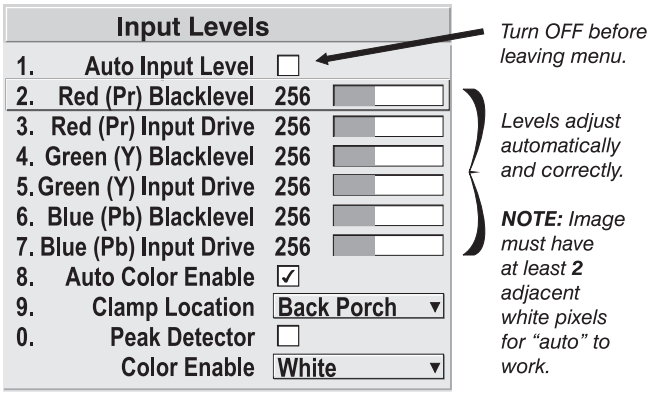

Good RGB or input levels—that is, the *drives* and *blacklevels* for each of the three colors, red, green and blue—ensure that images from analog sources other than decoded video have maximum contrast without crushing black or white. By default (and in an “Auto Setup”), the projector automatically determines the best input levels by monitoring image content and adjusting the controls appropriately—further adjustment is typically not required to obtain proper blacks or whites. *NOTE: This automatic adjustment requires at least* ***2 consecutive white pixels*** *in the image. Without these pixels, input levels may produce skewed colors, particularly in non-video images.*

However, for a very unusual source exhibiting one or more overly high blacklevels (typically caused by a noisy source causing blacklevel spikes), an experienced user may prefer to use the *Input Levels* menu (shown above). These adjustments, which together serve as a calibration process compensating for differences in sources and cabling, enable an experienced user to perfect the source image input levels and

eliminate the “overshoot” and “undershoot”. Note that *Input Levels* are of limited use with digital signals, but do offer some ability to tweak poorly mastered source materials.

AUTO INPUT LEVEL – Keep off for virtually all sources (default). Temporarily enter a checkmark *only* if you are an experienced user and you have an unusual source that you feel needs further color temperature and/or input level adjustment. After entering a checkmark, wait for the six slidebar values to stabilize, then delete the checkmark and exit. This compensates for incoming out-of-range drives (white) and blacklevels (black) that would cause “crushing” of light and dark colors in the image.

BLACKLEVELS AND DRIVES - To check your image and adjust these controls:

1. Make sure overall Contrast and Brightness are both set to near 50. *NOTE: Not required for “Auto” adjustment.*
   - Cont = 50 (approx.)
   - BRITE = 50 (approx.)
2. Check the color temperature setup using an internal grayscale test pattern, making sure to obtain a neutral grayscale. *NOTE: Not required for “Auto” adjustment.*
3. Confirm that you are using an analog source ***not*** connected to **INPUT 3** or **INPUT 4**, as Input Levels are not applicable for digital sources or sources going through the decoder. A grayscale is recommended.
4. If the blacks and/or whites appear OK, input levels do not need adjustment. If black levels are too high (and/or whites are too low, which is rare), you likely have a noisy source that is producing skewed input levels. Continue with Step 5.
5. Temporarily enable “Auto” in the *Input Levels* submenu. Wait for all 6 values to stabilize. Alternatively, do *not* use “Auto”—reduce blacklevels manually instead. Judge by eye and change one or more of the six levels as necessary to obtain proper blacks and whites. You may want to see only a certain color while adjusting—use the “Color Enable” option (described below).
6. Delete the “Auto” checkmark and leave the *Input Levels* menu.

IMPORTANT: Do not use Input Levels to adjust color temperature. *This will distort Contrast and Brightness functions as well as color temperature.*

AUTO COLOR ENABLE – When a checkmark is present, selecting a specific blacklevel or drive to adjust will automatically enable the corresponding color in the display. Delete the checkmark to see all colors.

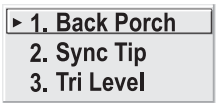

CLAMP LOCATION – This option (formerly known as *sync tip clamping*) can brighten the image produced from certain high-resolution high-frequency graphic sources. For almost all sources, the best clamp location is automatically selected by the projector. Use the normal *Back Porch* location if the image is either sufficiently bright or overly bright. Select *Sync Tip* if the image appears unusually dim, if there are horizontal streaks across the image, or if there is significant color drift. This moves the clamping pulse from the normal backporch location (which is likely too short) to the tip of the horizontal sync pulse. *Tri Level* is typically recommended for an HDTV source where the back porch is also short.

NOTE: Clamp Location is not used for video sources or any RGB source with sync information included on the video (e.g., sync-on-green). Use Tri Level instead.

COLOR ENABLE – Select which color or colors you want to see in the display, useful while working with color temperature white levels or input levels.

NOTES: ***1)*** *Input levels apply for the current source only, but for any color temperature used.* ***2)*** *Assuming that color temperature has been set up based on the internal test patterns, you can then set up input levels for a given source so that it matches the color temperature of the internal test patterns.*

PEAK DETECTOR – The Peak Detector is a fast method for defining individual input levels, and can improve the accuracy of input levels set by the Auto Input level function. Enabling the Peak Detector activates a special operating mode for detecting ***only*** pixels that are considered black or white—all other levels are displayed as a mid-level gray. When used with a smooth grayscale pattern in which black and white are known to be at opposite edges of the image, you can watch these isolated areas while adjusting individual blacklevels and input drives until both black and white edges are ***just*** visible and distinguished from neighboring pixels. Images from this source will then display correct blacks and whites without crushing or washing out.

See Figure 3.15. ***Adjusting Input Levels Using the Peak Detector***:

1) Display a 16 level grayscale test pattern from the desired external source, and enter a checkmark in the Peak Detector checkbox. *NOTE: The "Peak Detector" will initially render the grayscale as a uniform gray field before adjustment.*
2) Display one primary color (use *Color Enable* to select).
3) For the current color, adjust its corresponding "Blacklevel" slidebar ***just*** until a single band of black appears at one edge of the screen. This band represents the first band of the grayscale pattern, which should be 100% black. Do not adjust too far.
4) With the same color still active, adjust its corresponding "Input Drive" slidebar ***just*** until a single band of color appears at the opposite edge of the screen. This band represents the last band of the grayscale pattern, which should be 100% white (or the current color, if a certain color is enabled). Do not adjust too far.
5) Go back and check the black band—adjust the blacklevel slidebar if necessary. Adjustments are related, so you may have to go back and forth until both bands are ***just*** optimized.
6) Repeat Steps 2-5 with the other two remaining primary colors. When each primary color shows ***one*** optimized black band and white (or colored) band, the input levels for this source are correctly set. Upon exiting the *Input Levels* menu, the Peak Detector checkbox will clear.

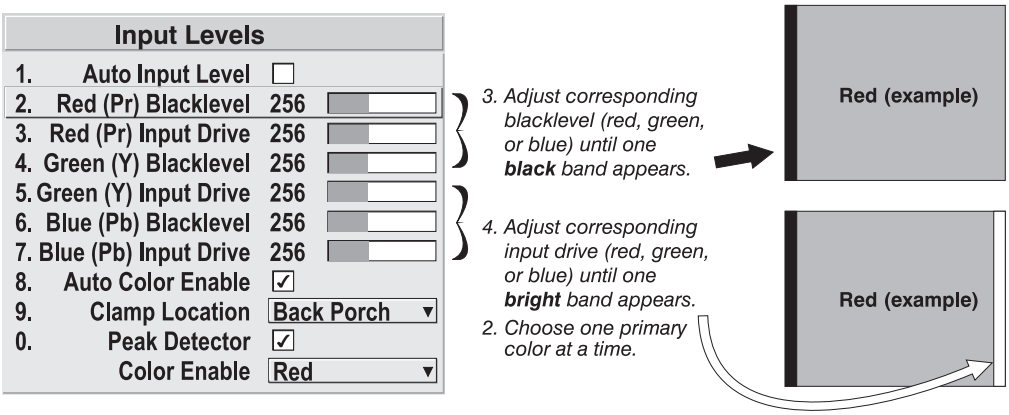

Figure 3.15. Adjusting Input Levels Using the Peak Detector
(RED EXAMPLE SHOWN)

Advanced Image Settings — SUBMENU

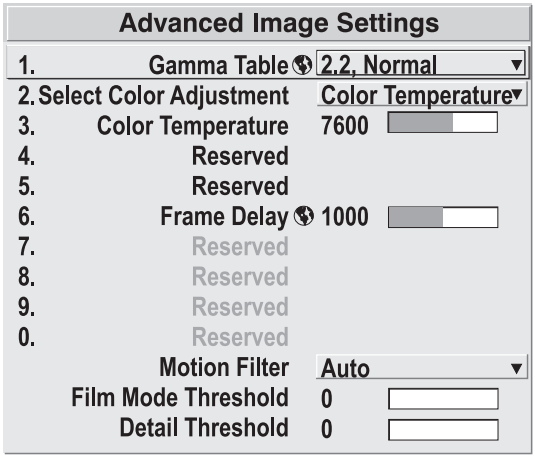

GAMMA TABLE: This control selects and applies the normal 2.2 gamma setting or a user-defined "arbitrary" (custom) gamma table that has been previously downloaded to projector memory (these custom gamma tables—a.k.a. *curves*—are typically created in *Christie's Arbitrary Gamma* application for the PC, and are downloaded via a separate utility). Use of custom curves can improve performance for certain kinds of source input and applications. Generally the best gamma curve is one that produces maximum contrast, brightness and color performance for the current signal and ambient lighting conditions.

NOTE: If no such curves have been defined and downloaded to projector memory, only the "2.2, Normal" default gamma curve is available here—adjust as desired in the main ***Image Settings*** *menu.*

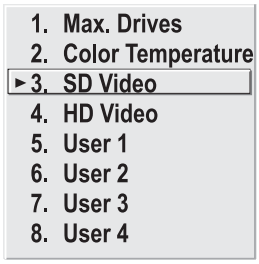

SELECT COLOR ADJUSTMENT: In "Select Color Adjustment", choose an overall color performance for all images. The "Max Drives" factory default simply drives all 3 colors at their maximum level so that they are fully on and cannot be changed. The two other pre-defined color adjustment choices—*SD Video* and *HD Video*—apply a color gamut optimized for video sources (standard or high-definition). Alternatively, you can specify a color temperature, which enables the nearby Color Temperature slidebar and applies its current setting (default = 6500K). If none of the pre-defined "Select Color Adjustment" options or color temperatures suit your application, select one of four color gamuts previously defined by a user (User 1, 2, 3, 4). A "User" option applies a customized color performance in which the user has precisely set the hue and intensity of each color component in the *Color Adjustment by X/Y* or *Color Saturation* submenus, and is most often needed with multiple-projector applications.

Select the color adjustment producing the best color accuracy for your application and installation.

To configure a "User" color adjustment (gamut), use either the *Color Adjustment by X/Y* or *Color Saturation* submenu.

NOTES: ***1)*** *"Color Temperature" defaults to 6500K until changed. All four "User" options default to SD Video unless they have been redefined by the user.* ***2)*** *Factory-defined color primaries, which ensure consistent color gamut from projector-to-projector, can be altered in the* ***Service*** *menu only. If you suspect alteration, the factory settings can be recovered with selection of* ***Reset to Factory Defaults?*** *in the* ***Service*** *menu (password-protected).*

COLOR TEMPERATURE — Adjust to apply a specific color temperature to all displays. Color temperatures are expressed in degrees Kelvin (3200-9300K), and utilize different combinations of the projector's original native color primaries to produce a "coloration" or cast (reddish or bluish) in images—the lower the temperature, the more reddish the cast; the higher the temperature, the more bluish the cast. Note that slidebar is enabled only if you have a source connected and have selected "Color Temperature" in the adjacent "Select Color Adjustment" pull-down list in the *Advanced Image Settings* menu.

FRAME DELAY — Set the interval of delay desired between the input signal and its appearance on screen. For applications such as simulation, where the feeling of "real time" image response is a priority, a minimum setting is usually preferable. For projectors capable of 3D applications where alternating left-right frames must be synchronized with the corresponding L/R shutters in 3D glasses, a frame delay setting of two (or multiple of two) may be more useful. Delay may vary between sources.

DARK INTERVAL — Not available in this projector. Shown as "Reserved".

3D STEREO SYNC — Not available in this projector. Shown as "Reserved".

3D STEREO SYNC SELECT — Not available in this projector. Shown as "Reserved".

3D STEREO SYNC DELAY — Not available in this projector. Shown as "Reserved".

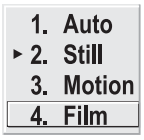

MOTION FILTER — This control is most useful for smoothing out moving images from interlaced sources. In most cases the proper Motion Filter setting is automatically determined according to the type of incoming source signal. However, if your source is noisy and/or inconsistent you may wish to "force" a setting to ensure stable processing for this source—if desired, override the default "Auto" setting by selecting the appropriate motion filter:

1) **AUTO:** The projector will automatically use the correct motion filter according to the incoming signal.
2) **STILL:** For static images with no motion, such as graphics from a CD.
3) **MOTION:** For video images that did not originate from film, or for moving computer-generated images.
4) **FILM:** For video images that originated from film. This will optimize image quality and stability.

FILM MODE THRESHOLD — This setting determines how sensitively the projector can detect if an incoming video signal originated from film or not.

DETAIL THRESHOLD — Use “Detail Threshold” to define at what frequency level the “Detail” control will begin to magnify high frequencies, which adds details back into the image. Raise the threshold to *ignore* more of these high frequencies, and lower the threshold to *magnify* more of these frequencies. A setting of “0”, for example, means no noise will be ignored and all will be magnified. An ideal detail threshold is one in which high frequencies that are causing objectionable noise are *not* magnified when using “Detail”, but frequencies which can help sharpen an overly-soft image *are* magnified when using “Detail”.

3.8 Adjusting System Parameters and Advanced Controls

Use the *Configuration* menu to define general operating parameters and communications with other projectors and equipment, and to access other advanced processing and image adjustments affecting overall performance. In addition, the *Configuration* menu provides access to diagnostics, calibration tools and the *Service* submenu (password-protected).

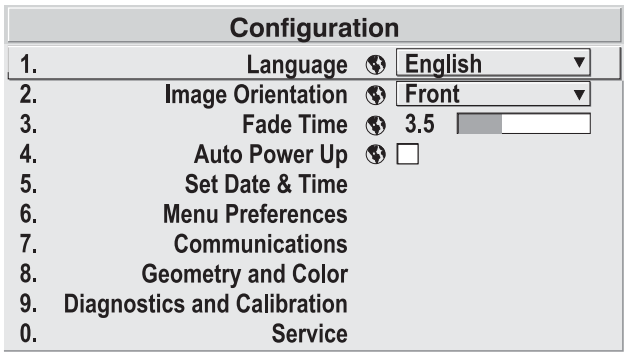

Keep in mind that settings in the *Configuration* menu (and its sub-menus) are typically “global” settings applied regardless of the type of source your are using. This characteristic is identified with the (globe) icon alongside the option.

*NOTE: The **Configuration** menu is recommended for experienced users/technicians only.*

System Configuration — GENERAL —

The first six options in the *Configuration* menu are explained below:

Language

Choose from available languages to use in the projector’s menus. The change will take effect immediately.

Image Orientation

Set the orientation of the image according to the orientation of your projector. If the setting is incorrect, projected images will be reversed and/or upside down.

*NOTE: This projector can be used in the **Front** orientation only, as it cannot be inverted or tilted beyond 15° in any direction.*

Fade Time

Set how long (in seconds) it takes to gradually dissolve one image into another for a source switch.

Auto Power-up

Enter a checkmark to enable the projector to automatically power up after losing power due to a power failure or due to unplugging the projector during operation. Note that unsaved display adjustments may be lost.

Set Date & Time

Enter/read the current year-month-day and hour-minute-second. Changes here reset the projector's real-time clock.

Menu Preferences — SUBMENU

Use the options in this submenu to adjust the appearance, content and/or location of on-screen menus and messages.

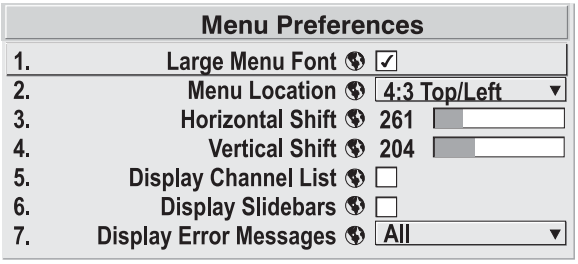

LARGE MENU FONT — Enter a checkmark to enlarge menus and their text. You may have to adjust "Menu Location" to accommodate the increased menu area.

MENU LOCATION — Use the pull down list to choose a pre-defined default or customized location for the display of all on-screen menus.

To create a custom menu location quickly, choose a preset that is closest to the desired location. Then adjust the slidebars of *Horizontal Shift* and *Vertical Shift* to move the menu to the desired location. To prevent cropping of larger menus, avoid locations too close to a corner or edge.

HORIZONTAL AND VERTICAL SHIFT — Shift your menus as desired, creating a customized menu location.

DISPLAY CHANNEL LIST — Enter a checkmark if you want to see a scrollable channel list whenever you press Chan from your presentation. Channels marked with a list icon in the *Channel Setup* menu will then appear here. The Display Channel List option also enables on-screen feedback when using the Input key. If you prefer to hide the channel list and input dialog box while switching channels and sources during a presentation, clear the checkbox.

NOTE: The Channel List and input dialog box cannot be hidden during use of the menus.

DISPLAY SLIDEBARS — Enter a checkmark to superimpose a small slidebar over the current image whenever an adjustable parameter is selected directly with a key such as CONT or Bright. If "Display slidebars" is unchecked, these slidebars can still be accessed, but will be hidden during adjustment. This option does not affect slidebars in menus.

DISPLAY ERROR MESSAGES — Choose how you want to be notified of errors detected in either the incoming signal or projector. Select "Screen" or "All" (default) to see brief on-screen messages. This is particularly recommended during setup or testing of the projector. Or select "RS232" to receive messages via RS232 (or RS422) serial communication only. To hide error message displays, such as during shows and presentations, select "Off" or "RS232".

System Configuration
— COMMUNICATIONS —

Settings in the *Communications* submenu define and control how single or multiple projectors are can link with each other and with a controlling device.

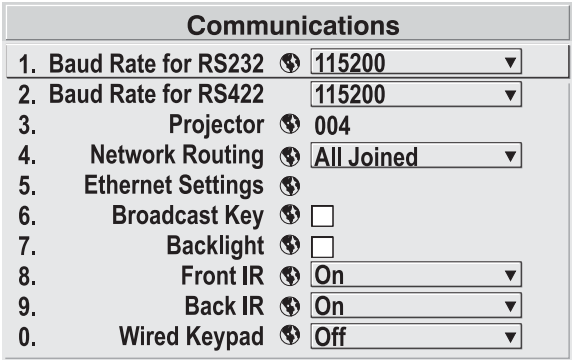

Figure 3.16. Communications

Baud Rates

The baud rate setting determines the speed of communication to and from the projector on the RS232 or RS422 links. The maximum rate for either standard is 115200. Set the baud rate to match that of your controlling device, such as your PC. If you are unsure about what baud rate to choose, refer to the documentation for the controlling device. In an existing network of projectors, if you discover that a projector has a different baud rate, make sure to use the pull-down list and select the correct baud rate using the Enter key—do not just scroll this control with ◀ or ▶ keys. Serial communication is always 8 data bits, no parity.

Projector

Enter a three-digit number (such as "001") to assign or change a number to the projector currently in use. If the current projector already has a number assigned, that number will appear here (for example, “004” in Figure 3.16, above). Numerical identity for projectors enables you to communicate with a single projector within a multiple-projector application (see also Proj key in *3.2, Using the Keypads*). If you make a mistake in assigning or changing the projector number, press Exit to cancel.

Network Routing

Not applicable for stand-alone projectors.

▸ 1. Separate	= Networks do not communicate with one another
2. RS232 and RS422 joined	= Serial networks are joined, but Ethernet is isolated
3. RS232 and Ethernet joined	= RS232 and Ethernet are joined but RS422 is isolated
4. All joined	= Network communications travel all networks

SEPARATE: Select “Separate” (factory default) to keep RS232, RS422 and Ethernet messages on their respective paths instead of being broadcast to the remaining ports. This is useful when you have a network in which each projector is connected via *both* its RS232 and RS422 serial ports (Figure 3.17A)—at each projector, serial communications will stay on the path of origin only, as determined by the type of controller. If a projector or path ever fails, you can use the other path.

In Figure 3.17A, failure to keep the networks separate would likely cause communication errors. In Figure 3.17B, where there is only one link between any two projectors (and the controller), make sure to join the networks.

If you have a simple serial network with only one type of linking—RS232 or RS422—the type of network routing does not matter.

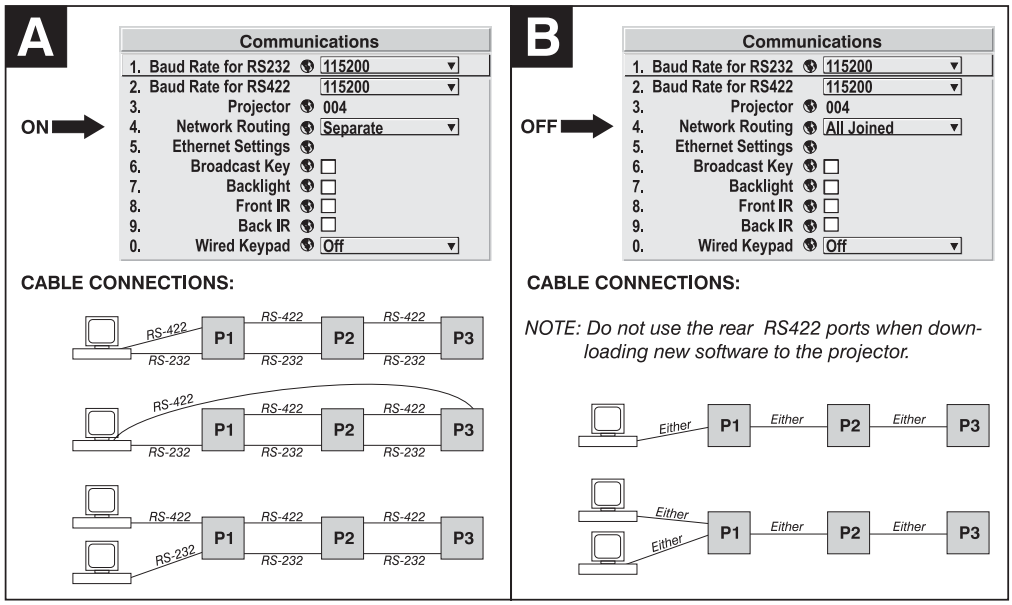

Figure 3.17. Using the "Network Routing" Option

RS232 AND RS422 JOINED: Messages to and from any serial port will also be relayed to all other serial ports. Use when there is only one physical link between any two projectors, but which might be RS232 *or* RS422.

RS232 AND ETHERNET JOINED: Messages to and from the RS232 ports will also be relayed to the Ethernet port, and vice versa. Any RS422 communications will be isolated.

ALL JOINED: All messages reach all ports.

Ethernet Settings (SUBMENU)

NOTES: ***1)*** *Not used for stand-alone projectors.* ***2)*** *Recommended for network administrators only.*

DHCP: Enable this checkbox if you want a DHCP server to automatically change the projector's default IP address (0.0.0.0) to one that is valid and unique for use on the current Ethernet network. On networks without a DHCP server, or to simply override the automatic DHCP server function, delete the checkmark and enter the new "IP Address" settings desired. Remember that only a 0.0.0.0 address will trigger the DHCP addressing service, and only when the DHCP checkbox is enabled.

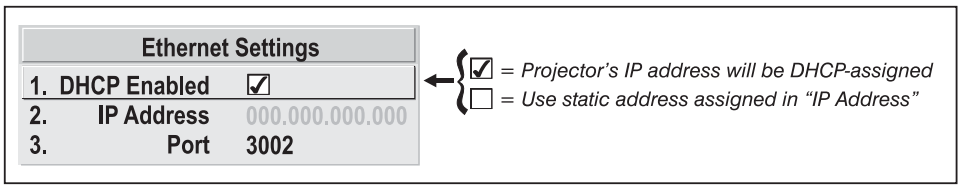

IP ADDRESS: Enter a valid and unique IP address for use on the network to which the projector is currently connected. Upon the next power-up, this address will overwrite any previous IP address such as the projector's factory-defined default (0.0.0.0), or one that has been assigned by a DHCP server or other user. An IP address entered here remains in effect until it is changed again. *NOTES: Make sure the projector is connected to the network before changing its IP address. Make sure to re-boot.*

PORT: On some Ethernet networks, firewall restrictions may require that the port number of the projector be changed from its default of 3002. If so, enter a new valid port number here.

Broadcast Key

Enter a checkmark if you want keypad commands sent to one projector to be relayed to all projectors in a serial network. Note that the (Proj) key will temporarily "override" the effect of a broadcast setting and allow you to control a specific projector when necessary. Make sure to remove the Broadcast Key checkmark when operating redundant networks.

Backlight

Toggle the built-in keypad lighting on/off.

Front IR / Back IR

NOTE: With v1.0 software, only one IR keypad protocol (A) is recognized at each of the projector's IR sensors. Response can be toggled ***on*** *or* ***off*** *independently in the menu as desired for your application. Use of multiple protocols as described here requires a software upgrade.*

As described in *Section 2*, the standard IR remote keypad is capable of sending data to the projector in either one of seven different protocols called **A – G**, depending on its internal jumper settings (default= **A**). Likewise, the front and rear IR sensors on the projector can be set to accept IR data accordingly, responding to one of the **A – G** protocols**,** all or none. The projector's **"All"** default is adequate for most single-projector installations. Select a specific protocol to work with only certain projectors in a multi-projector group.

Note that the front and rear IR sensors cannot respond to *different* protocols– changing a protocol for either sensor to anything other than **OFF** changes the protocol for the other sensor too. For example, setting *Front IR* to **E** also changes the *Back IR* to **E**. If you want only *one* sensor to respond to a particular protocol, you must disable the other sensor by setting its protocol to **OFF**.

To disable *both* IR sensors, you cannot use the IR remote keypad to select the second **OFF** setting. This safeguard prevents accidentally disabling a keypad while you are using it. Instead, use either the built-in keypad or the wired remote (optional) to set the remaining active sensor to **OFF**. The projector will no longer respond to an IR remote keypad.

NOTES: The IR remote keypad for this projector is set at manufacture to "Protocol A". See ***2.14, Remote Keypad Protocols and Conversion*** *for information about changing the keypad protocol for use with supporting software.*

Wired Keypad

Select "On" to enable use of a wired remote keypad connected to either the rear of the projector (standard keypad with XLR connector) or the side input panel (optional keypad with phono-jack connector). The projector will then respond to incoming commands from either port. To disable the wired keypad, you must use a different keypad—the built-in or an IR remote keypad—to select "off". This safeguard prevents you from accidentally disabling the wired keypad during use.

System Configuration
— GEOMETRY & COLOR —

In the *Configuration* menu, select the *Geometry and Color* submenu when you need to modify overall color performance and/or image geometry for all sources.

Geometry and Color		
1.	Test Pattern	Grid ▼
2.	Keystone	50.0
3.	Brightness Uniformity	
4.	Edge Blending	
5.	Color Adjustments by X,Y	
6.	Color Saturation	

Test Pattern

Choose the desired internal test pattern, or select OFF to turn off a test pattern. Alternatively, use the (Test) key for cycling through test patterns.

Vertical Keystone

Use to correct a keystoned image shape in which both sides of your image are inclined toward the top or bottom edge. Keystone is typically caused by tilting the projector in relation to the screen, so that the lens surface and screen are no longer parallel to each other.

Figure 3.18. Keystone Adjustment

Brightness Uniformity — SUBMENU

Brightness Uniformity provides further refinement of displays already matched for their primary colors and overall light output. Use Brightness Uniformity to create an exceptionally smooth image in which no area appears brighter and/or more red, green or blue than another. In the Brightness Uniformity menu, enable the “Uniformity Enable” checkbox to access a multitude of adjustments for critical color light output control in specific areas throughout the image. Your settings apply as long as the “Uniformity Enable” checkbox is enabled and you are using a “User” color temperature defined by the Brightness Uniformity controls. To disable the Brightness Uniformity function, delete the “Uniformity Enable” checkmark.

*NOTE: See also **3.11, Using Multiple Projectors** for the complete step-by-step procedure for achieving uniform brightness in adjacent displays.*

Edge Blending — SUBMENU

The Edge Blending submenu provides a range of controls for smoothing together the overlapping bright edges of multiple adjacent projected images to create a single larger “seamless” image. These controls, which primarily affect whitelevels, are typically used in conjunction with mechanical lens blinders (optional), which are installed on the front of the projector and which primarily affect blacklevels.

*NOTE: See also **3.11, Using Multiple Projectors**.*

Color Adjustments by X/Y, and Color Saturation — SUBMENUS

*NOTES: **1)** For defining or changing a User 1, 2, 3, or 4 color palette or “gamut”. Sometimes known as Comprehensive Color Adjustment™. **2)** Factory-defined primary color levels, which ensure a specific color performance from projector-to-projector, can be altered in the **Service** menu only. If you suspect alteration of these*

*defaults, the factory settings can be recovered with selection of "**Reset to Factory Defaults?"** in the **Color Primary Settings** submenu accessed via the **Service** menu (password-protected).*

From the factory, the projector can utilize any of the 3 pre-defined color performance settings identified at right (default=Max Drives), or colors can be driven on the basis of color temperature. For most applications, one of these options will produce accurate and realistic colors from a variety of sources. They can be applied at any time in the *Advanced Image Settings* menu ("Select Color Adjustment"), and are not adjustable.

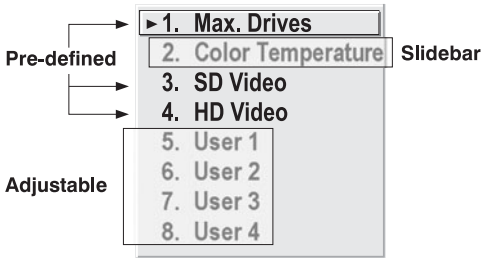

Figure 3.19. Color Performance Choices

DEFINING "USER" COLOR GAMUTS: In some cases, you may find that none of the pre-defined "Select Color Adjustment" options exactly suit your needs. For example, you may require a unique color gamut (range) for a single projector or application, or you may need to precisely match colors across multiple adjacent displays. In such cases, use the *Color Adjustments by X,Y* or *Color Saturation* submenus to define the precise *hue* of each primary color component (red, green, blue, white, magenta, cyan, yellow) used to generate the millions of colors produced in displays. You can create up to four custom color gamuts (User 1, 2, 3, or 4) with these adjustments.

Note that the two menus differ only in their user interface, so use whichever menu best suits your needs and application.

- *Color Adjustments by X,Y* — Enter known x/y coordinates from the chromaticity graph.
- *Color Saturation* — Adjust color slidebars and judge image color by eye or meter.

A user-defined color "adjustment" can be applied for a source by selecting the desired "User" option in the "Select Color Adjustment" list accessed in the *Advanced Image Settings* menu.

COLOR ADJUSTMENT BY X,Y: Use this submenu if you want to alter, add or copy a color gamut (i.e., “color adjustment”). Controls in this menu define the precise hue of each primary color component (red, green, blue, white, magenta, cyan, yellow) used to generate the millions of colors produced in displays. The x/y coordinates for each color define its location on the standard CIE chromaticity graph (see Figure 3.21)—changing either or both of these numbers will change the hue of the color, and relocate the “triangle” for possible colors. For example, changing the x/y coordinates for red will either move the color closer to orange or closer to violet, which will in turn affect all displayed colors having a red component. Adjust the slidebars or enter new specific coordinates as desired to define or change up to four “User” color gamuts needed for your environment and applications. Apply at any time in the *Advanced Image Settings* menu.

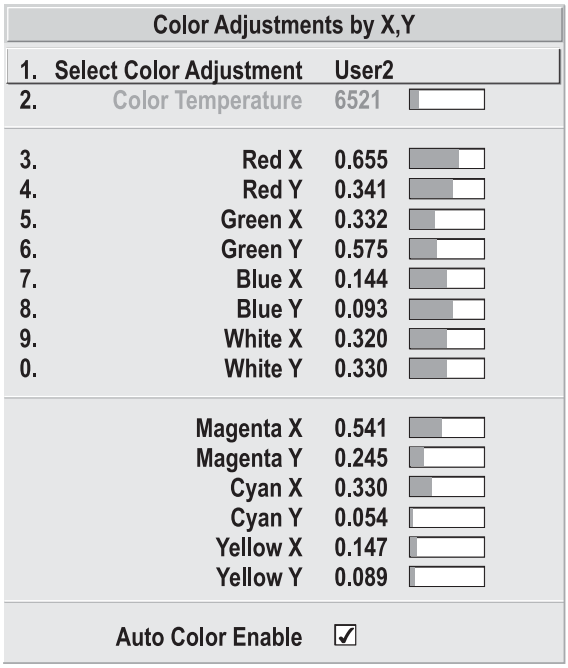

Figure 3.20. Customize Color Hue

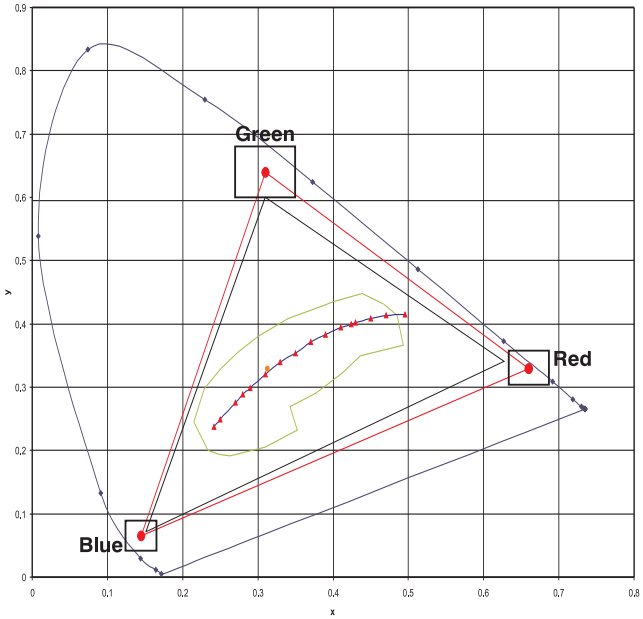

Figure 3.21. CIE 1931 Chromaticity Diagram

NOTE: Keep new x,y coordinates within the original color gamut triangle shown here.

PROCEDURE FOR X,Y ADJUSTMENTS: *See 3.11, Using Multiple Projectors.*

COLOR SATURATION: Use this submenu if you do not have specific color coordinates in mind and will simply judge color performance by eye or meter. Like the *Color Adjustment by X,Y* submenu, each color control actually defines new x/y coordinates for that color and changes its hue—it is just a different interface.

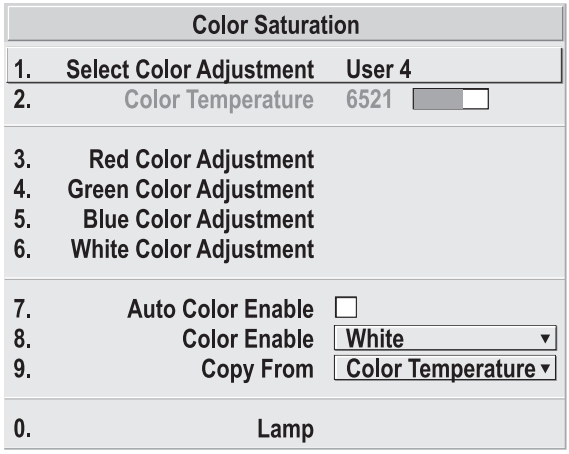

Figure 3.22. Customize Color

Adjust the hue of each primary color (red, green, blue, and white) by using more or less of it in relation to the other colors. Apply at any time in the *Advanced Image Settings* menu.

*NOTE: A **Color Saturation** adjustment defines the corresponding x/y coordinates shown in the **Color Adjustments by X,Y** submenu. These x/y coordinates will remain stable for this "User" gamut until they are changed again via either menu. Values displayed in the **Color Saturation** menu, however, will likely fluctuate as you use the projector, and will be different when you return to this menu at some point in the future. These floating changes do not affect the x/y coordinates or gamut.*

System Configuration
DIAGNOSTICS / CALIBRATION

Test Pattern

Choose the desired internal test pattern to display, or select OFF to turn off a test pattern. Alternatively, use the (Test) key for cycling through test patterns.

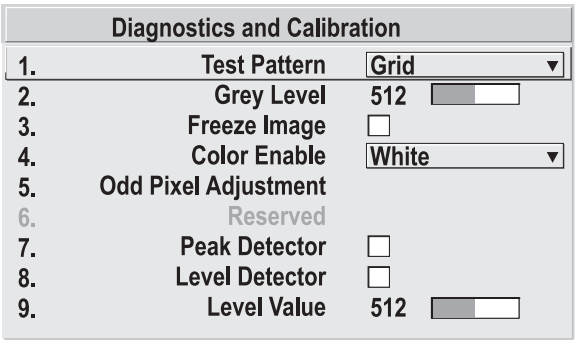

Test Pattern Grey Level

Set the desired level of grey for displaying in the full grey field test pattern.

Freeze Image

Enter a check mark to freeze (stop) an image at a single frame. This diagnostic tool is useful if you need to examine in detail a still version of an incoming image that cannot be "frozen" at the source. For example, in moving images it is sometimes difficult to observe artifacts such as external deinterlacing/resizing and signal noise. Remove the checkmark to return back to normal.

Color Enable

Select which color or colors you want to see. This is useful while working with color temperature, input levels or other special setup parameters. Colors can also be enabled/disabled by entering the corresponding function code listed on the back of the standard remote keypad.

Odd Pixel Adjustment

*NOTES: **1)** Factory-set and rarely required by user. **2)** Source must be >110 MHz.*

When using certain RGB sources, you may need to adjust the normal gain or offset of odd pixels in relation to even pixels. This will smooth out very narrow (1-pixel wide) “checks” or vertical stripes that indicate adjacent “on” and “off” pixels. Although offset and gain slidebars can be adjusted individually and manually, using the Level Detector simplifies this process (see Figure 3.23):

1) Use an external analog native-sized continuous grayscale test pattern with at least 256-levels.
2) Turn “Level Detector” on.
3) Set “Level Value” to ***~200***. The image should now be black-and-white (or black-and-one color, if you use “Color Enable” function).
4) Adjust ***offset***. Half of the pixels will move, the other half will not.
5) Adjust until the two transition regions overlap. The stripe of noise will be minimized, defined by the value in the slidebar.
6) Set “Level Value” to ***~800***. The image should now be black-and-white.
7) Repeat Steps 4 and 5, but adjusting ***gain***.
8) Repeat Steps 3-7 for all remaining colors. Your RGB source should now be OK.

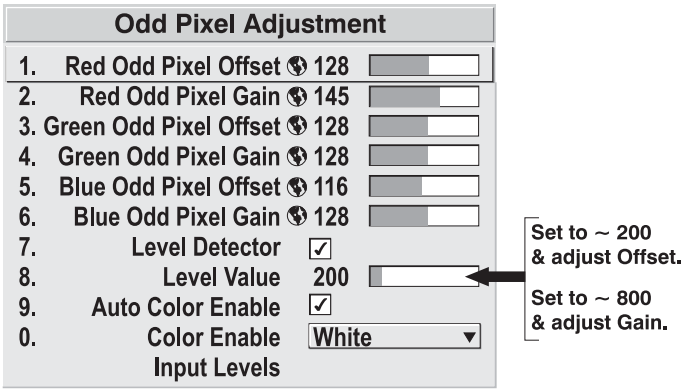

Figure 3.23. Using “Odd Pixel Adjustment”

NOTES: ***1)*** *Adjust offset before gain, since offset affects gain.* ***2)*** *A value of 128 represents no change in normal odd pixel offset or gain.* ***3)*** *Odd Pixel Adjustment eliminates “1 pixel on, 1 pixel off” patterns only, not any type of larger patterns.*

Reserved

No function.

Peak Detector

The Peak Detector is fast method of defining individual input levels, and can improve the accuracy of input levels set by the Auto Input level function. Enabling the Peak Detector activates a special operating mode for detecting ***only*** pixels that are considered black or white—all other levels are displayed as a mid-level gray. When used with a 16-step grayscale pattern in which the two black and white bands are known to be at opposite edges of the image, you can watch these isolated areas while adjusting individual blacklevels and input drives until both bands are just visible. Images from this source will then display correct blacks and whites without crushing or washing out.

Level Detector

The Level Detector checkbox enables a specific thresholds for blacks and whites—input levels that fall below a specified *Level Value* (see below) are displayed as black, and all others are displayed as white. It aids in Odd Pixel Adjustment. To use:

1. Enable Level Detector and display a continuous grayscale.
2. Set *Level Value* to near black (such as 200).
3. Adjust Offsets to minimize area of black stripe.
4. Set *Level Value* to near white (such as 800).
5. Adjust Gains to minimize area of white stripe.

Level Value

The *Level Value* defines the value to be used by the Level Detector in recognizing blacks and whites. See *Level Detector*, above.

3.9 Working with the Lamp

Four different sized lamps can be used with this projector: 2, 3, 4.5 or 6 kW. To ensure that the required ignition and power level is supplied to the lamp, you must define in software—preferably before power-up—which size lamp is installed, otherwise the lamp could be seriously overdriven or underdriven. Subsequent adjustments in the *Lamp* menu can then help to optimize lamp performance and ensure the brightest, most uniform image possible for the life of the lamp.

Which Lamp is Installed?

The ideal time to check your lamp size is prior to each power up. This avoids the possibility of igniting your lamp with the wrong level of power:

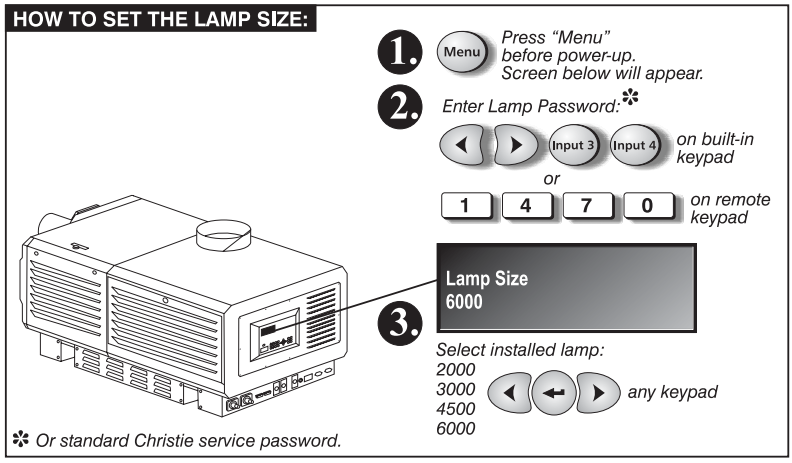

Figure 3.24. Checking/Setting Lamp Size

See Figure 3.24. Before powering up the projection head, press (Menu). The **LCD STATUS DISPLAY** at the rear of the projector will show a "Lamp Size" of 2000, 3000, 4500 or 6000 watts, depending on its most recent setting (factory default=6000). Select the lamp that is currently installed—if you are unsure, a qualified service technician must unlock the lamp door and look at the lamp.

*NOTES: **1)** Setting the lamp size requires a qualified technician. The required password for access is a service option that may be turned off. **2)** Current lamp size should also be recorded on the "Lamp Installed" label located on the lamp door—see right. Mark the appropriate lamp size using a small blue dot label (see inside cover of this manual), or mark with a dry-erase pen.*

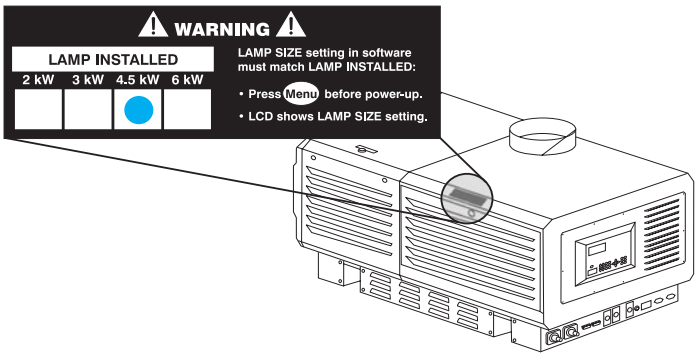

Figure 3.25. Use the "Lamp Installed" Label

If the projector is already running, consult the *Status* menu to see which lamp size is currently recorded in projector memory. If this does not match the installed lamp, you can either change the *Lamp Size* setting in the service password-protected *Service* menu, which implements the new size at the next power-up, or you can power down and press Menu to use the LCD for lamp selection as described above (passwords are shown in Figure 3.24. Always indicate current lamp size on the *Lamp Installed* label.

Note that any of the lamps can be powered by the 7kW ballast, but only the 2.0 kW and the 3.0 kW lamps can be powered by the 3 kW ballast *(available in 2005).*

Lamp Cable Lengths

The high-voltage DC cables connected between the lamp ballast and the rear of the projection head can be 2-30 meters in length, depending on your site requirements and setup. The length currently in use must be defined in projector software for any new installation—this setting compensates for the voltage drop that occurs over distance and ensures that the proper voltage is maintained at the lamp. In the *Lamp* menu, set the "Cable Length (m)" slidebar to match that of your DC cables. By default from the manufacturer, this setting is 8 (approximately 25 feet). See Figure 3.26.

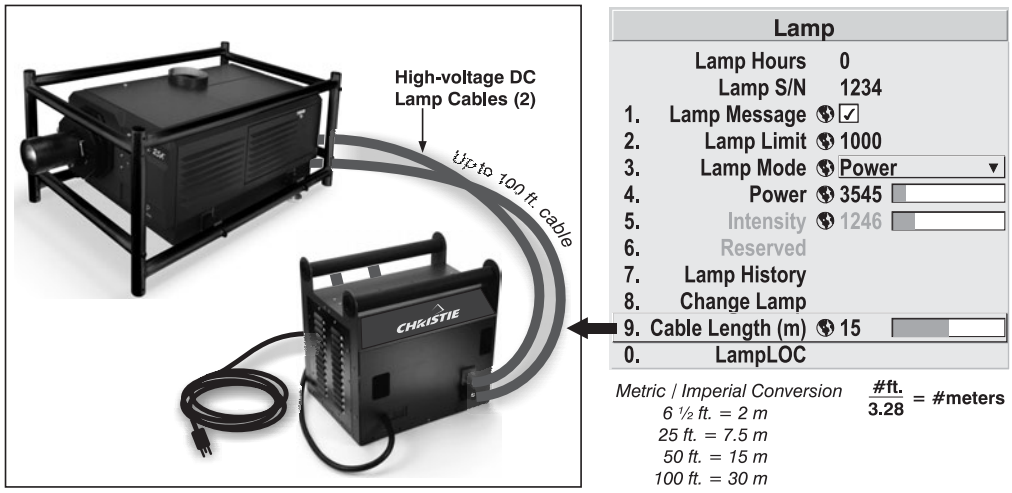

Figure 3.26. Define Lamp Cable Length

Turning the Lamp on/off

ON:

1. With the projection head and ballast connected to each other, and with the ballast breaker on, press (Menu). The **LCD STATUS DISPLAY** at the rear of the projector will show a "Lamp Size" of 2000, 3000, 4500 or 6000 watts, depending on its last setting. Factory default=6000. Use (◄) or (►) to select the lamp that is currently installed. This should also appear on the *Lamp Installed* label located on the lamp door. *NOTE: A lamp password is required to change lamp type/size, unless the "Enable Password" service option has been turned off.*
2. Turn on the projection head and lamp by pressing (⏻) POWER on any of the projector's keypads.
3. For subsequent power-ups of this lamp, press (⏻) POWER. There is no need to reset the lamp size until a different-sized lamp is installed.

OFF:

1. Press (⏻) (POWER) on any of the projector's keypads.
2. **WAIT** for fans to continue running for 10 minutes to cool the lamp.
3. Proceed with full shutdown of the system, if desired.

If the Lamp Won't Turn On

If the lamp fails to ignite, the projector will automatically re-try ignition using 100% of the maximum power acceptable for the lamp. If this re-try also fails, and there is no error code indicating a specific problem such as an open lamp door or an over-temperature condition, the lamp size may be incorrectly defined. For instance, the defined "Lamp Size" may be 2 kW when a 6 kW lamp is present. To check the "Lamp Size" setting, press (Menu) while the lamp is off. The **LCD STATUS DISPLAY** at the rear of the projector will show a "Lamp Size" of 2000, 3000, 4500 or 6000 watts, depending on its most recent setting (factory default=6000). Enter password (unless it has been turned off) and select the lamp that is currently installed. If the lamp still will not ignite, a qualified service technician should check all lamp connections and, if OK, replace the lamp.

See also *Section 5, Troubleshooting* section.

Lamp Menu

Whenever you install a new lamp in the projector, access the *Lamp* menu to record the lamp serial number in the projector's memory. You can also choose a lamp mode for regulating power and light output, optimize lamp performance, and access other read-only information pertaining to past and present lamps.

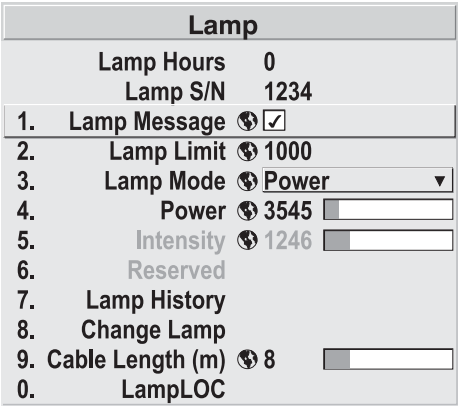

LAMP HOURS shows the number of hours logged on the current lamp. Whenever you record a new lamp serial number, this value automatically resets to "0", where it begins to log time for the new lamp. *NOTE: Read-only.* This information also appears in the *Status* menu.

LAMP S/N is the serial number recorded for the current lamp. When you install a new lamp and enter its serial number, the number will appear here. *NOTE: Read-only.*

Enter a checkmark for **LAMP MESSAGE** to enable a warning message that will appear upon power-up when the lamp has reached the specified lamp limit and should be replaced. Delete the checkmark to prevent display of this message—instead, when your lamp expires, only the status display messages on the back of the projector will provide the visual warning to replace the lamp.

NOTES: ***1)*** *It is recommended that the Lamp Message checkbox remain enabled.* ***2)*** *When a lamp warning message appears, press* EXIT *to temporarily cancel the message. The message will continued to appear upon power-up until you install a new lamp.*

Set **LAMP LIMIT** to the number of hours you expect to log on the current lamp before replacing it. This will trigger a lamp message on-screen (if enabled). Recommended limits for each of the four lamp sizes are listed in Table 3.5 later in this section.

NOTES: ***1)*** *If you change modes over the life of a lamp, the lamp limit you originally expected may no longer be possible.* ***2)*** *Turning the lamp on and off reduces lamp life significantly, as do other factors.* ***3)*** *It is recommended that Lamp Limit not exceed the warranted lamp life, otherwise a lamp could become dangerously fragile with overuse.*

Set which **LAMP MODE** you want to use in order to control the light output. You can choose to run the lamp as bright as possible (i.e., always using maximum power—this is the default upon power up), or you can power the lamp with a specific wattage appropriate for the installed lamp, or you can set a specific intensity (brightness) to maintain. Although there are exceptions, generally higher light output or higher power settings can shorten lamp life.

Figure 3.27.

Use the lamp mode that best suits your brightness needs. For example, in a tiled application you may want to precisely match brightness levels between adjacent images—judge by eye and set each individual **Lamp Power** setting as necessary. Or you may simply always want images to be as bright as possible—choose **Max Brightness**. Always keep in mind that higher lamp power settings shorten lamp life.

Lamp modes are described below:

- **Max Brightness:** The lamp will always burn as brightly as possible, driven by 110% of the power level rating for the installed lamp (see *Section 6, Specifications*). Keep in mind that the "maximum brightness" for any lamp gradually diminishes with age—images will become dimmer over time. Its current output level (note: *not* in lumens) appears in the "**Intensity**" option.

  NOTE: "Max brightness" mode shortens lamp life. Avoid over-driving a lamp for extended periods.

- **Intensity:** Brightness will remain close to a specified level for as long as possible. Once you select this option, enter a number representing the intensity level (brightness) you wish to maintain—the projector will automatically adjust power as needed to maintain this intensity as closely as possible. Note that the intensity value is a correlation only and does not represent an actual lumens level. See "**Intensity**" below.

- **Power:** The power supplied to the lamp will remain at your specified wattage level. Once you select this option, enter the number of watts representing the power level you wish to maintain. See "**Power**" below.

POWER - This slidebar and number indicates how many watts are applied to the lamp. You can apply anywhere from 75% of the maximum power intended for the installed lamp up to an "over-drive" that exceeds the maximum rating by approximately 10%. Set for the number of watts as desired, keeping in mind that lower power levels produce dimmer images. When in either "**Power**" or **Max Brightness** modes, the power level remains constant. Specifying a maximum power level here is the same as operating in **Max Brightness** mode, and will shorten lamp life.

NOTES: Power level can be set only if the lamp is in "power" mode.

INTENSITY – This value and slidebar represents the current brightness of your lamp, decreasing over time when you are operating in **Max Brightness** mode or at a specific **Power** level. However, when you are operating in "**Intensity**" mode, this value remains at the original "**Intensity**" setting chosen, and cannot be adjusted.

NOTE: The number shown for "intensity" is not the actual lumen output, but rather a correlated value only—9415 may represent 20,000 lumens, for example.

To use "**Intensity**" mode, judge by eye and set the level as desired for your application, remembering that higher settings can significantly shorten lamp life. Over time, the projector will automatically increase the power supplied to the lamp as needed to maintain the chosen intensity as closely as possible. This mode is known as "Brightness Tracking" or "LiteLoc".

Since power increases over time in this mode, prevent prolonged over-driving by checking the lamp power readings periodically.

HOW LONG CAN I MAINTAIN BRIGHTNESS? Software can maintain your "**Intensity**" setting until the required power exceeds the maximum rating for the lamp (2.0, 3.0, 4.5, or 6.0 kW) by approximately 10%. The lower the setting, the longer it will take to reach this threshold, and the longer you can maintain the desired brightness. Keep in mind that once the lamp power reaches its *maximum* wattage (see "**Power**", above), this tracking is no longer possible. At this point, the lamp will gradually begin to dim as usual, even though your original "**Intensity**" value will still appear in the menu. To resume accurate tracking, reduce the intensity setting so that the resulting "**Power**" value is less than its maximum—the lower the intensity, the longer it can be maintained.

For example, a 6000 watt lamp (6.0 kW) can be safely driven at no more than 6600 watts. To produce desired brightness at the screen, a new lamp would likely need less than this maximum rating—perhaps 5120 watts (example only). Over time, however, the lamp will require more and more current in order to generate the desired light, until eventually the lamp wattage reaches its 6600 "overdrive" maximum, and the lamp power automatically levels off. At this point, the tracking function terminates (i.e., the power level stabilizes) and the lamp will begin to dim normally. Either reduce your "**Intensity**" setting or replace the lamp.

Do not lower the "**Intensity**" so much that the corresponding "**Power**" value reaches its *minimum*—the intensity setting will be inaccurate and cannot be maintained. For best results in achieving uniform intensity amongst tiled images, choose an "**Intensity**" setting that enables all lamps to operate at less than the maximum number of watts available in your projector but high enough to keep the corresponding lamp power above its minimum. See "**Power**", above.

NOTES: ***1)*** *Lamps become more stable over time, thus a specific intensity is more easily maintained as the lamp ages.* ***2)*** *Intensity can be set only if the lamp is in "Intensity" mode* ***3)*** *Intensity cannot exceed the output of Max Brightness mode.*

LAMP HISTORY - This read-only option lists the most lamps most recently installed and recorded in the projector. *Lamp History* automatically updates whenever you record a new lamp serial number—the new lamp is added to the bottom of the list.

Lamp History	
S/N	Hours
1234	1999
5678	27

Use **CHANGE LAMP** to record the serial number for a newly installed lamp:

In the *Lamp S/N* window, use the number text entry keys to record the new lamp serial number, and press ENTER again to accept the change. See *Using Slidebars and Other Controls* if you need help entering the number. Once entered, the new lamp serial number will be added to the *Lamp History* menu and the *Lamp Hours* timer will reset to "0". *Lamp Mode* and *Lamp Limit* remain as they were for the previous lamp, and can be changed at any time.

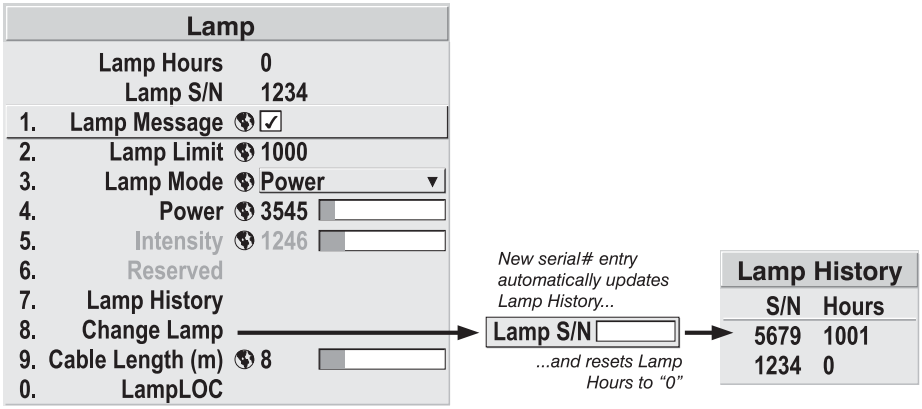

Figure 3.28. Recording the New Lamp Serial Number

NOTE: Enter a serial number ***only*** *if you have just installed a new lamp. This will help ensure that lamp timer is not reset on an old lamp and that the number of hours logged on the lamp will be accurate.*

⚠ IMPORTANT ⚠

Always DO record the serial number of a NEW lamp.

CABLE LENGTH (m) - Use this slidebar to define what lengths of high voltage DC cables are currently connected between the lamp ballast and the "Anode" and "Cathode" ports on the rear of the projection head (refer back to Figure 3.26). This regulates the voltage drop that occurs over distance, and ensures that adequate voltage reaches the lamp. Particularly in projectors rented for temporary installations, this setting may have to be changed from its last use. Adjustment range is 2-30m (6½-100 ft.).

⚠ IMPORTANT ⚠

Always match this setting to your current cable lengths.

Adjusting Lamp Position (LampLOC™)

Use **LampLOC** to align a newly-installed lamp after its first power-up. For best results, select the **DO AUTO** control in the LampLOC menu and wait a few moments for the X-Y-Z values to stabilize. The motors and sensors will work together to precisely position the lamp for optimized performance and brightness at the screen, utilizing filtering to eliminate signs of lamp flicker. Progress status is displayed near the bottom of the menu. When complete, the lamp alignment is optimized for the current installation.

*NOTES: **1)** A 10-minute warm-up is recommended before adjusting LampLOC. **2)** Intensity mode(brightness tracking/LiteLOC) is disabled during a LampLOC adjustment.*

Table 3.4. Lamp Current Ranges

Ballast Type	Lamp (kW)	Lamp Current Range (amps)
Single-phase or 3-Phase	2.0	66-80
	3.0	82-110
3-Phase	4.5	112-135
	6.0	126-155

NOTE: Using "Max Brightness" or a maximum Lamp Power setting will exceed the maximum values shown here by approximately 10%. Avoid prolonged use.

Using the LampLOC™ Slidebars

The individual LampLOC™ slidebars, each of which moves the lamp along one axis only, are provided as a reassuring back-up should the **DO AUTO** button fail or if you feel a manual, operator-assisted lamp optimization will produce more output. Either measure your results with a light meter at the lens and screen, or simply watch the intensity values near the top of the menu. Note that with these slidebars you may attain a slightly higher peak than with the **DO AUTO** button, but this peak may not be centered on the lamp curve thus lamp performance may not be optimized (whereas the **DO AUTO** button also utilizes filtering to eliminate the effects of any lamp flicker). In general, use the individual slidebars if you feel it is unavoidable.

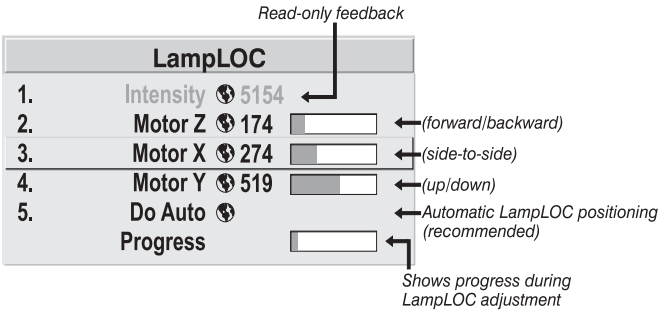

Figure 3.29. Setting LampLOC™

HOW TO ADJUST (IF USING A LIGHT METER): First obtain peak readings on a light meter centered in front of the lens, then at the center of the screen. For each button, adjust in one direction, then back up when the reading begins decreasing.

*NOTES: **1)** Display a 100% white internal test pattern. **2)** Use a tripod to center the light meter with the lens. Distance from the lens does not matter. You may need an attenuator, or wish to construct an internal foil aperture first. **3)** This is an optional procedure—watch the intensity feedback shown near the top of the menu if preferred.*

1. Adjust forward/aft (**z**) until the brightness reading in front of the lens is maximized.
2. Adjust left/right (**x**) and up/down (**y**) until the brightness reading in front of the lens is maximized
3. Re-adjust forward/aft (**z**) as necessary.
4. Repeat Steps 1-3 as necessary.
5. Repeat Steps 1-4, but reading at the screen instead of at the lens.
6. Reset Lamp Power or Intensity if desired.

Stand-by Mode

Close the internal electro-mechanical shutter (Shutter) to blank the image and put the projector in a cooler stand-by mode with minimum power going to the lamp. Lamp power will be reduced to 60% of the maximum rating for 4.5 and 6.0 kW lamps, or 75% of the maximum rating for 2.0 and 3.0 kW lamps. Upon opening the shutter and restoring the image, the lamp power will return to its previous setting.

How Old is My Lamp?

When a new lamp is installed and its serial number recorded by selecting "Change Lamp" in the *Lamp* menu, the lamp timer resets to "0" and begins logging time for the new lamp. This tally appears in both the *Lamp* menu (see right) and the *Status* menu.

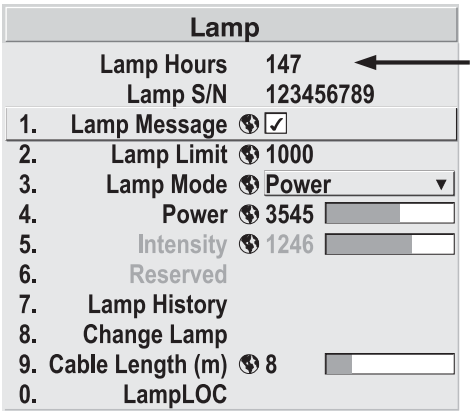

To review the number of hours logged for previous lamps, consult the *Lamp History* menu.

When to Replace the Lamp

If the Lamp Message checkbox has been enabled in the *Lamp* menu (recommended), an expiry message will appear upon power-up when the lamp has reached its defined Lamp Limit. The lamp should be replaced.

The Lamp Limit setting should never exceed the warrantied lamp lifetime by more than 20%, as an old lamp becomes increasingly fragile and more prone to sudden failure or even explosion, which can be damaging as well as dangerous. These maximum limits depend on the lamp size—see Table 3.5.

Table 3.5. When to Replace the Lamp

Lamp (kW)	*Replace BEFORE:*
2.0	2880 hours
3.0	1728 hours
4.5	1080 hours
6.0	600 hours

*NOTE: Hours shown here are **20% beyond** the pro-rated credit warrantied lifetimes (see **Section 6, Specifications**). **Do not exceed.***

See also *4.4, Replacing the Lamp & Filter*.

3.10 *Status* Menu

The read-only *Status* menu lists a variety of details about the standard and optional components currently detected in the projector. Refer to the *Status* menu for versions of hardware and software installed, the type (size) of lamp defined in projector memory, its current, voltage and hours logged in total and for a specific period (such as a rental period), and for your projector model name and serial number. In addition,

the *Status* menu identifies the current channel, its location, its frequencies and other details.

Scroll the full *Status* menu using ▲ ▼. Use ◀ ▶ for page up/down.

3.11 Using Multiple Projectors

When an installation requires multiple projectors, you can use the RS232 and/or RS422 serial ports to daisy-chain the units together and control the group with a single keypad or a computer/controller connected to the first projector. In such a network, you can choose to broadcast commands to the entire group, or use the Proj key as desired to limit responses to an individual projector. Or you may prefer that each projector in an installation stands alone and responds only to a unique transmission protocol from its own keypad *(NOTE: alternative IR keypad protocols are not supported in v1.0 software.)*

Alternatively, you may want to add projectors to an Ethernet network.

NOTE: Refer back to ***3.8, Adjusting System Parameters and Advanced Controls*** *for complete information about communicating with multiple projectors.*

Matching Colors In Multiple Screens

In a multiple-projector wall, you will likely want to precisely match color and intensity from image-to-image so that the full wall is as uniform as possible. This matching is typically done in conjunction with brightness uniformity and edge blending.

Preliminary Calibration

As a final part of the manufacturing process, all primary colors in the projector are precisely set to pre-established values to ensure that overall color performance is optimized and is as accurate as possible (refer back to Figure 3.21). Upon installation at a site, however, lighting and other environmental factors may slightly change how these colors appear on your screen. While the change is negligible in most cases, you may prefer to recover the originally intended color performance before trying to match colors from several projectors. Or you may be renting a projector in which the colors were changed for use at its previous site, but are not ideal for yours.

The recommended first step in achieving such consistency is to use a color meter to measure the native primary colors—red, green, blue, and white—as they appear at the screen and record these as *Color Primary Settings* in the *Service* menu (password-protected) for each projector. On the basis of these new values, which are stored in memory, each projector will then automatically calculate any necessary corrections to reproduce the original factory colors under the current environmental conditions. This essentially calibrates a projector to its surroundings, compensating for factors such as screen type, lamp and/or ambient lighting that can alter the final color characteristics on-screen, and will improve color accuracy and consistency in a group of projectors. It ensures a good starting point for further customizing and matching.

NOTE: The Roadie 25K has three additional primary colors—magenta, cyan and yellow.

To return to the factory-set color primaries, such as when a projector is moved to different site, you must access the *Service* menu (password-protected). Select the *Reset to Factory Defaults?* option in the *Color Primaries* submenu. Then repeat the calibration process describe above, if desired, and continue with matching of colors.

Color Adjustment Procedure

Once the *Color Primary Settings* are calibrated for the site (see above), use the *Color Adjustments by X,Y* menu to further refine each projector's fundamental primary colors so that the hue and intensity of each color appears the same from one display to another. Once matched, you will have created a single new shared range of colors or "color gamut" that all projectors can produce. This palette—named User 1, 2, 3 or 4—can be applied or disabled for a source at any time throughout a bank of adjacent displays, simplifying both the setup and maintenance of a "seamless" wall.

1. Set up and optimize all projector settings. You can ignore color temperature, since you will be defining a new color palette, but do set up each projector in every other aspect. Closely align all screen edges.

2. Assign projector numbers to make communications easier. Use a wired keypad.

3. Use the same lamp mode for all projectors, and do the following:

   - ❑ Start *Select Color Adjustment* to "Max Drives"
   - ❑ Display a full white test pattern
   - ❑ Adjust lamp power until white fields appear the same brightness.

4. Display the *Color Adjustments by X,Y* menus for all projectors. Each menu shows the x/y coordinates defining the "Max Drives" color gamut for this projector. Jot down the values shown in one (any) of the displays. See Figure 3.30. Or use "Copy From" to copy these into a "User" gamut for this projector.

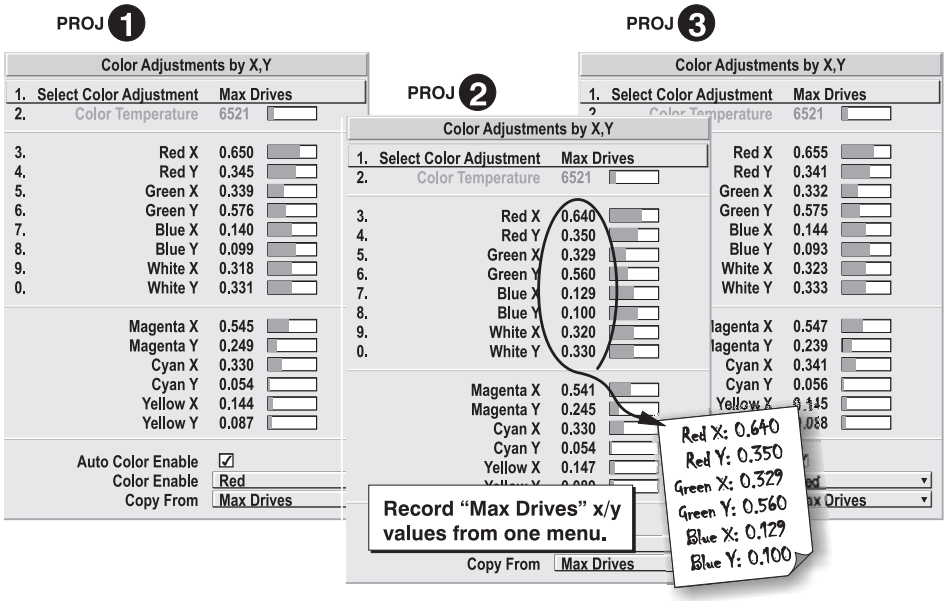

Figure 3.30. Jot Down a Set of "Max Drives" X/Y Values

5. In each projector, select a "User" color adjustment (1-4) to enable *Color Adjustments by X,Y* changes. Then enter your recorded x/y values into each menu (Figure 3.31).

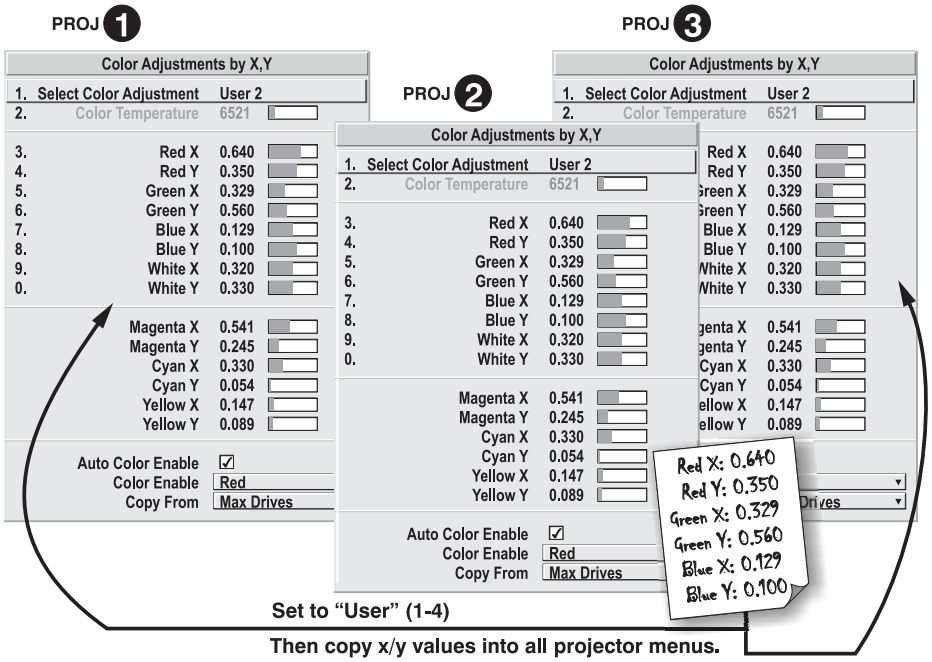

Figure 3.31. Copy X/Y Values into All Projectors

6. In each projector, judge by eye and adjust x/y coordinates slightly in the following manner:

   - To match reds, decrease " Red X" until full field red screens match.
   - To match greens, decrease "Green Y" until full field green screens match.
   - To match blues, increase both "Blue X" and "Blue Y" until full field blue screens match.

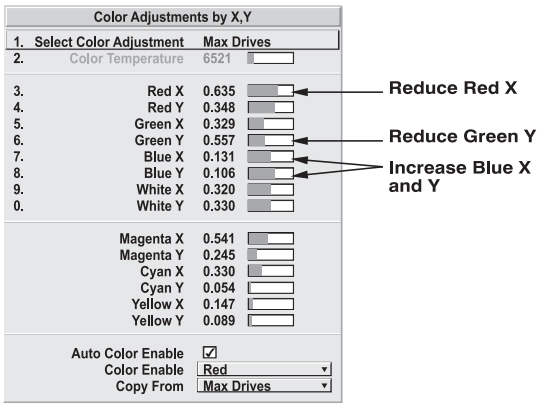

   NOTE: For speed, enable the "Auto Color Enable" checkbox. Each color coordinate you select will then automatically trigger a full field display of the corresponding color.

These coordinate adjustments move the three color points closer together (refer back to the chromaticity chart shown in Figure 3.21) to establish a "shared" gamut attainable by all projectors in your group. Adjust only as necessary to ensure the resulting color palette is as large as possible. When done, you may need to adjust lamp power slightly.

7. All screens should now be color-matched. Apply this new "User" gamut to a source at any time by selecting it in the "Select Color Adjustment" list accessed in the *Advanced Image Settings* menu.

Using the Color Saturation Menu for Color Matching

You may prefer to use the *Color Saturation* menu to match colors across multiple screens. In the three *Color Adjustment* submenus (Red, Green, Blue—see right), set all main values to “100” and the secondary values to “0”. Then judge by eye and adjust the slidebars as needed. Note that adjustments here define new x/y coordinates in the *Color Adjustments by X,Y* menu.

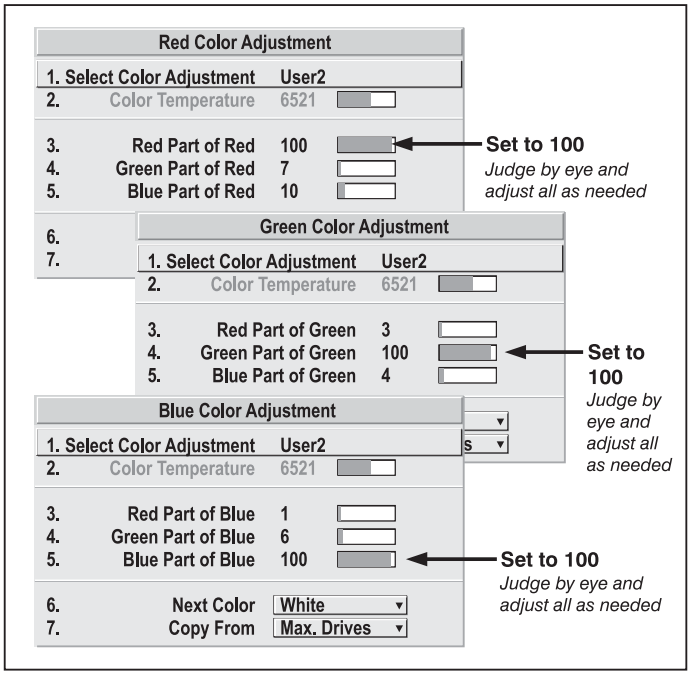

Figure 3.32. Color Matching Using Color Saturation Menu

Achieving Brightness Uniformity

WHAT IS BRIGHTNESS UNIFORMITY? When used to refine screens already matched for their primary colors (see *Matching Colors in Multiple Screens*, above) and overall light output, proper adjustment of *Brightness Uniformity* can create an exceptionally smooth screen in which:

- no area of the screen appears more red, green or blue than another
- no area of the screen appears brighter than another color and light output from one screen closely matches adjacent screens

Although the *Brightness Uniformity* control can be used for a stand-alone projector, it is particularly useful for setting up and maintaining tiled images that form a cohesive display wall in which the color “cast” and light output appear uniform throughout each image as well as throughout the entire wall. The procedure provided here assumes a multiple-screen application.

⚠ ***Before You Begin***

Read through the entire procedure before attempting to adjust Brightness Uniformity controls, and keep in mind the following checklist of prerequisites and guidelines:

- ❑ **ADJUST COLORS FIRST—**Always adjust the primary colors as described in the “*Matching Colors in Multiple Screens*” procedure (above) before attempting to work with Brightness Uniformity. This ensures that primary colors, color temperature, and maximized light output are all well-matched from one screen to another. These matches are needed before you can achieve good Brightness Uniformity results.
- ❑ **RUN LAMP FOR 100 HOURS—**Light output and Brightness Uniformity can vary significantly during the first 100 hours of lamp use. For best results with new

lamps, either set up Brightness Uniformity after this period, or do an initial setup and re-check at 100 hours.

- **SET LAMP POWER—**Make sure each "Lamp Power" setting is as high as possible for your application while still maintaining a good overall match of light output from screen-to-screen. By nature, achieving a *uniform* brightness will require a slightly reduced *overall* brightness—this reduction will help ensure that you have enough range of adjustment when examining brightness variables more closely from screen-to-screen, and will help prevent premature "maxing out" when trying to match to a certain color, zone or projector.
- **USE A "USER" COLOR TEMPERATURE—**Always adjust Brightness Uniformity for a *User* color temperature defined when you matched primary colors, and continue to use it for all sources displayed on the wall. Your other color temperatures will not necessarily be matched from screen-to-screen.
- **WHITE UNIFORMITY SLIDEBARS—**White Uniformity slidebar values may not always reduce to "0". Each slidebar adjusts overall light output in a specific screen zone, but the value shown represents the current setting for *green* in this zone. When other "hidden" values (red or blue) are lower than green, during adjustment in the White Uniformity menu their values will reach "0" first, causing the slidebar to stop earlier than expected.
- **JUDGE BY EYE OR USE A METER—**Good brightness uniformity can be achieved with either techniquie.

Step 1: General Setup

1a) Adjust primary colors (see *Matching Colors in Multiple Screens)* to ensure matched overall color temperatures and light output between screens.

⚠ IMPORTANT ⚠
Double-check that all WHITES and LIGHT OUTPUT are well-matched.

1b) Enable the *Uniformity Enable* checkbox. This will enable access to the uniformity controls and will apply the settings to your image.

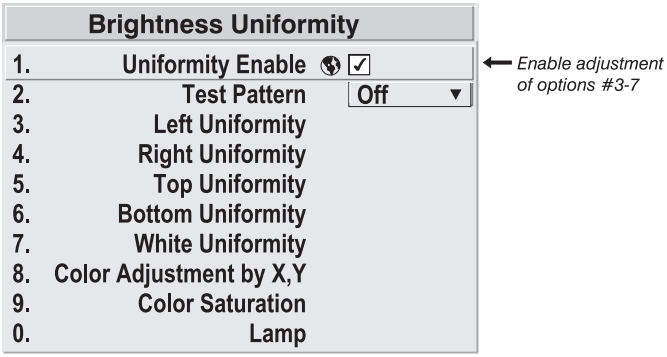

1c) Select the 13 Point test pattern for display. This pattern provides 9 screen "zones" with 13 targets.

FOR BEST RESULTS: Rather than examining the CENTER of each zone when assessing Brightness Uniformity adjustments, focus on extreme EDGES as indicated in the illustration at right.

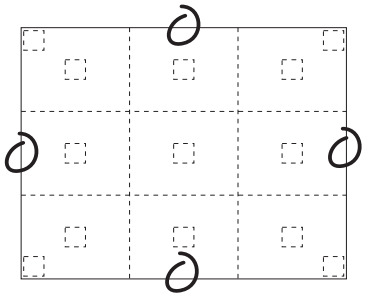

1d) In either *Color Adjustment* menu, select a color. Then:

- ***If you have created a "User 1"*** color gamut (recommended) for a well-matched wall, select "User 1" and continue to Step **1e**.
- ***If you prefer maximum brightness*** rather than a particular color temperature, select "Max Drives".

⚠ IMPORTANT ⚠
Do not change User 1 Color Adjustment in color-matched applications!

1e) In the *White Uniformity* menu, set the "Overall" output level to **50.0** and all remaining slidebars to **0.0**. This decreases the light output *just enough* throughout the screen so that any color level can then be *increased* later as necessary for matching light output from zone-to-zone. Do not exceed **50.0** for "Overall"—a higher level will likely interfere with achieving brightness uniformity and is not recommended.

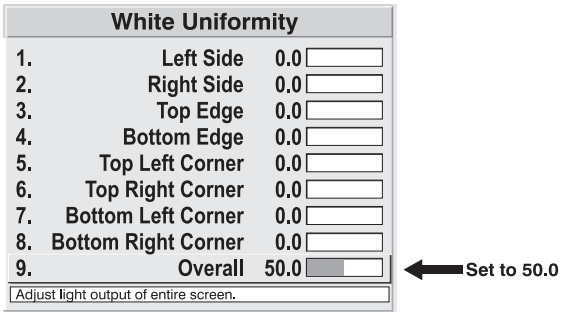

Ensure that overall light output remains well-matched from one screen center to the next. Where necessary, increase or decrease Lamp Power slightly to recover center matches.

Step 2: Adjust Color (level of red/green/blue) in 8 Zones

NOTES: ***1)*** *At this point, ignore menu colors and the* ***brightness*** *of individual zones.*

2a) On each screen, compare the color temperatures in the 8 target zones (4 edges and 4 corners) to that of the color temperature of the center. Compare using a ***white*** field only, and take note of any areas that do not match the center. Also decide if any screen exhibits a more obvious color shift than other screens—begin with this screen in Step **2b**.

2b) Return to the *Brightness Uniformity* menu. Beginning with the screen that exhibits the most obvious color shift(s), for each edge that exhibits a noticeably different color temperature from the center, select the corresponding *Uniformity* adjustment menu—*Left*, *Right*, *Top* or *Bottom*. For example, if any part of the left side is too blue, too red or too green, adjust the colors in the *Left Uniformity* menu (i.e., change their light output) until all portions of the left side closely match the center color temperature. Adjust an edge first (focusing on its center), then adjust its corners. See Figure 3.33.

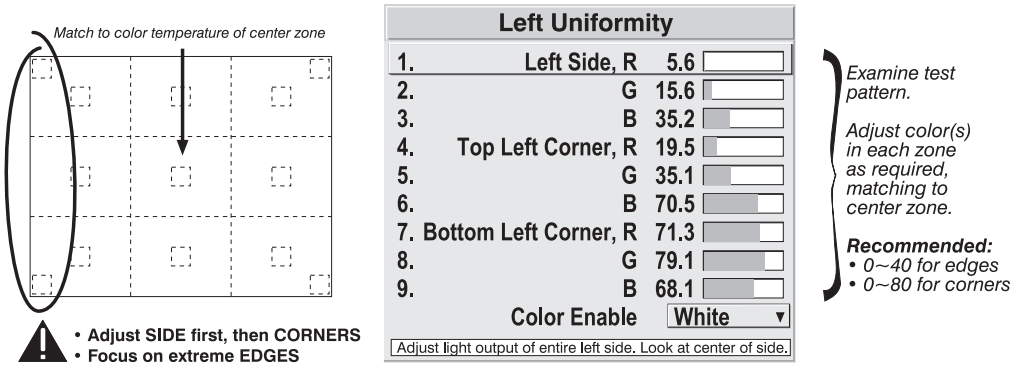

Figure 3.33. Match Zones to Center Color Temperature

Repeat the color adjustment of sides and corners for each edge of the screen that does not yet match the center (note that each corner is adjustable in either of its two adjacent "side" menus). When done, all areas of a given screen should match. Repeat Steps **2a** & **2b** for all remaining screens.

Step 3: Adjust Light Output in 8 Zones

3a) For each screen, compare the light output of each *edge* and *corner* to that of the *center*. If any of the areas differ, use the *White Uniformity* menu to match edges and corners to the center as described below (see Figure 3.34). Begin with the screen exhibiting the most obvious variations in light output.

- Adjust **edge** *White Uniformity* first—note that each edge adjustment also affects the rest of the screen slightly. Keep all edges just slightly *lower* than the center light output rather than matching light output precisely. Otherwise, it may not be possible to brighten the corners (typically the dimmest areas of the screen) enough. I.e., the best uniformity is a compromise between the brightest and darkest areas of the screen.
- Adjust **corner** *White Uniformity* last—each corner adjustment affects only this quadrant.
- Repeat for each screen.

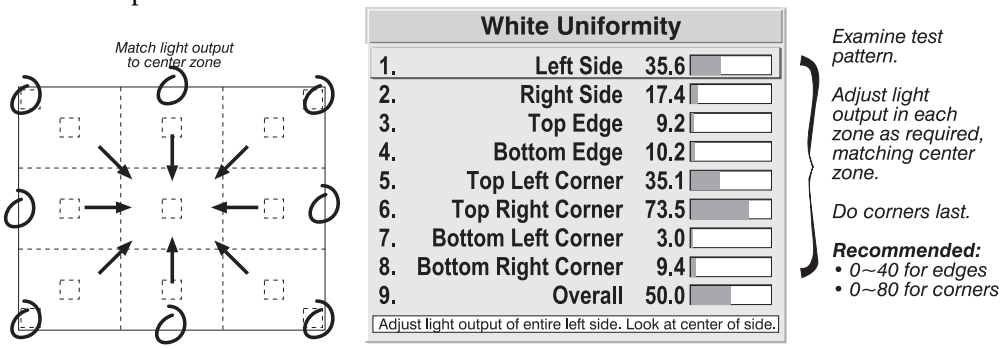

Figure 3.34. Match Zones to Center Light Output

Step 4: Readjust Color Temperature (level of red/green/blue) in 8 Zones

4a) Return to Steps **2a** & **2b** and, if necessary, fine tune the zones so that they all still exhibit a single color temperature.

Canceling Brightness Uniformity

If you do not want to use or apply Brightness Uniformity settings, delete the checkmark from the "Uniformity Enable" checkbox at the top of the *Brightness Uniformity* menu.

Edge Blending

Christie *Edge Blending* is an innovative set of software functions that can quickly and easily blend whitelevels along the edges of multiple adjacent projected images to create a single seamless larger image.

What is a Blend?

In simple terms, a blend appears as a gradient strip along an edge of a projected image. It is darkest along the extreme edge of the image, and lightens nearer to the rest of the image (see right).

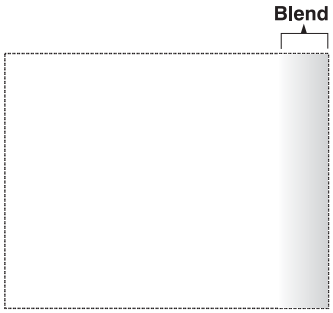

How Are Blends Used?

In multiple-projector walls, complementary blends between neighboring images can compensate for the extra “brightness” or intensity where these edges overlap. By controlling blend width and other properties, you can achieve uniformity across the group of images. Visible overlaps will disappear:

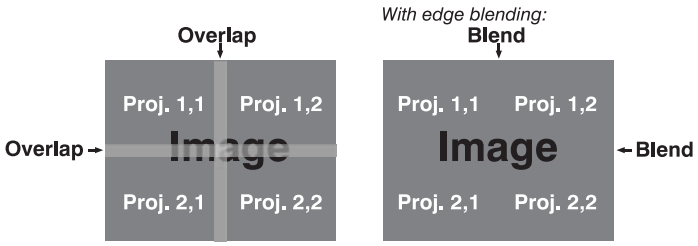

Figure 1. Edge Blending Concept

For best results, use the same projector model and type throughout your display wall. In addition, avoid high-gain screens whenever possible—the optical performance of such screens demands minimal image offset, thus projectors must be located very close to one another.

Edge blending software controls are located in the 2-page *Edge Blending* submenu—access via *Configuration* menu, then go to the *Geometry and Color* menu and select *Edge Blending*. The *More* option opens the second page of the *Edge Blending* submenu.

Main Functions

Use edge blending controls to set the precise *width*, *shape* and *midpoint* you need to blend overlapping edges together smoothly.

- **Blend Width** determines how much area is used for blending along an overlapping edge. Slidebar values represent the number of 8-pixel steps used for the blend. For example, a setting of “3” creates a blended edge 24 pixels wide. A setting of “0” signifies no blending. For best results in most applications, use a blend width of 16-48 steps (128-384 pixels).

  Ranges: 0-80 horizontal, 0-60 vertical.

- **Blend Shape** determines the rate of roll-off across the blend width, i.e. how quickly the white levels across the blend change from light and dark. Increasing the *Blend Shape* setting accelerates the rate of change at both extremes so that *less* of the region appears mid-gray (see Figure 2). Decreasing the *Blend Shape* setting slows the rate of change so that *more* of the region appears mid-gray. For most applications, this subtle control is best left close to 50.

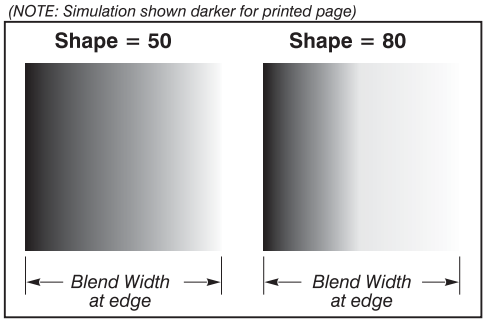

Figure 2. "Shape" Examples

- **Blend Midpoint** determines the white level at the blend midpoint (the point equidistant between the beginning and end of the blend). Increasing the *Blend Midpoint* setting creates a blend that appears brighter than the rest of the image. Decreasing the *Blend Midpoint* setting creates a blend that is darker than the rest of the image. A setting of 50 means the midpoint is approximately 50% black—for best results in most applications, keep fairly close to this default.

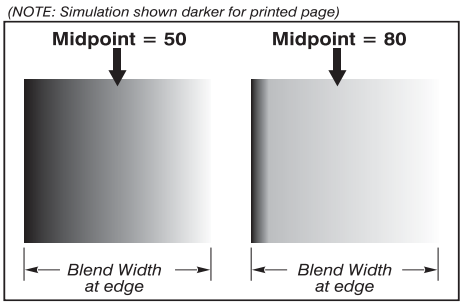

Figure 3. "Midpoint" Examples

Other Functions

For convenience, the *Edge Blending* submenu also includes related options for enabling a specific color and/or test pattern, or for working with colors or the lamp. Such functions duplicate those provided elsewhere in the menu system.

Edge Blending Procedure

*NOTE: Before attempting to work with edge blending software functions, you must **1)** physically align the projectors/images by correctly overlapping the displays from your intended external source, and **2)** Match colors and Brightness Uniformity.*

⚠ IMPORTANT ⚠

For a shared edge, all *Blend* procedures and settings should be identical on BOTH projectors.

1. Start with 2 projectors. Display full white field test pattern from both.
2. In the *Edge Blending* submenu, enable *Edge Blending* by entering a checkmark in the top checkbox.
3. **SET STARTING POINTS FOR ADJUSTMENT**:
   - Set all blend widths to 0.
   - Go to "More" and set everything in the *Edge Blending (2)* menu to 50.

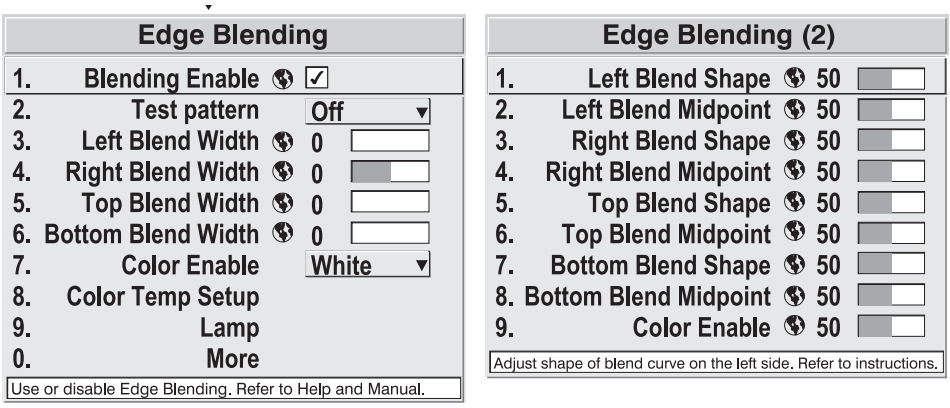

Figure 3.35. Set Starting Points for Each Projector

4. **SET BLEND WIDTH**: On one projector, increase the *Blend Width* for an overlapping edge (for example, if the projector's image is on left, its right edge overlaps the adjacent image—adjust *Right Blend Width*). Use the same setting on the second projector for this shared edge.
5. Re-adjust width (both projectors) until the overly bright band at the midpoint of the overlapping blends disappears or *just* changes to very light gray. For the shared edge, use the same *Blend Width* setting on each projector. If the "best blend" appears to be between two settings, choose the wider setting for both projectors.
6. **CHECK BLEND:** If the blended region appears too dark or light in relation to the rest of the image:
   - Increase *Blend Midpoint* in both projectors to "lighten" the overall blend, decrease to "darken" the overall blend.
   - Adjust *Blend Shape* in both projectors to fine-tune change the amount of mid-gray intensity (as opposed to black/white) in the blend.
7. Repeat with remaining projectors / overlaps.
8. Check completed display wall with the desired external signal.
9. Adjust mechanical alignment if necessary to maintain perfect pixel-on-pixel alignment over time.

In applications where you are projecting only white or light images, the *Blend Width* may be slightly higher—set according to how much overlap you have between images. Use the following as a guide (examples show overlapping width only—values for overlapping height will differ):

- If side overlap is **15%**, set *Blend Width* to **24**
- If side overlap is **20%**, set *Blend Width* to **32**
- If side overlap is **25%**, set *Blend Width* to **40**
- If side overlap is **30%**, set *Blend Width* to **48**

3.12 Remote Control of the Projector

As an alternative to using a keypad, most projector functions can be controlled remotely, typically at a controller such as a PC, via simple bi-directional ASCII messaging on a serial or Ethernet communication link.

WHAT SETUP IS NEEDED? To control these projector functions remotely via Ethernet and your own controller, either open an Ethernet socket between your controller and the valid projector address, or connect a serial link (recommended) between your controller and any of the RS422 ports or the RS232 In port. Connect all ports, if desired.

For complete information, including a list of valid ASCII messages and how to structure them for use, obtain the current *Christie Serial Communications* document.

3.13 Working with the Lenses

NOTE: See Section 2, Installation and Setup for all lens installation and boresight instructions.

The lens mount secures the primary zoom lens to the projection head. It provides 1) setup adjustments for correct boresight, and 2) manually controlled focus, zoom and offsets for general use.

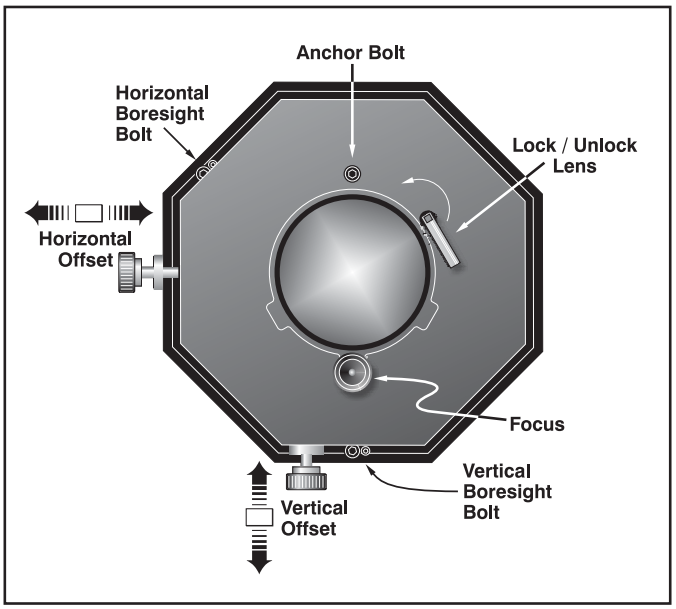

Figure 3.36. Anatomy of the Lens Mount

As necessary for your application, use either standard high-brightness lenses or optional high-contrast lenses. The latter can be identified by the “plump football” shape aperture visible within the lens.

An optional anamorphic lens (1.25x) can be installed into an optional anamorphic lens mount, then swung into place to widen a “squeezed” image into a properly proportioned “scope” display. It is typically used with screens having side masks that are retracted for “scope” images, or in rooms having fixed side masking but a very short throw ratio (throw distance/screen width).

Zoom ' With the projector in its permanent location, turn the lens zoom ring on the primary lens to enlarge or shrink the image in each direction as necessary.

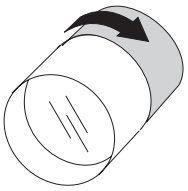

Offsets ' Turn the horizontal and/or vertical offset knobs as necessary so that the image is square on the screen with no keystoning. For best results, avoid extreme offsets characterized by corner vignettes on a white test pattern.

For more vertical offset range, it is possible that mechanical TILT should be changed to help compensate for significant differences in screen and lens height. Refer back to *Section 2*.

NOTE: Refer back to Figure 2.13 and Figure 2.14.

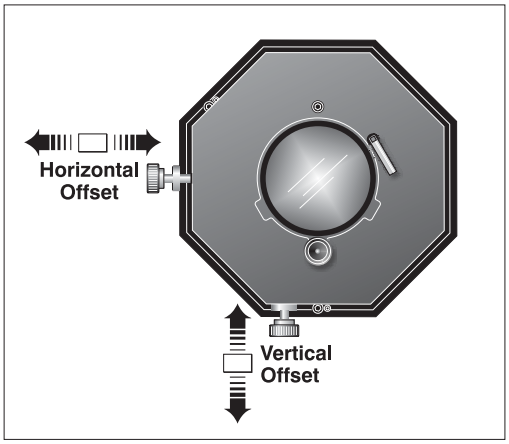

Focus

For overall focus improvement, rotate the focus adjustment knob directly under the lens. For best results, use a crosshatch test pattern or similar, and focus on the center of the image.

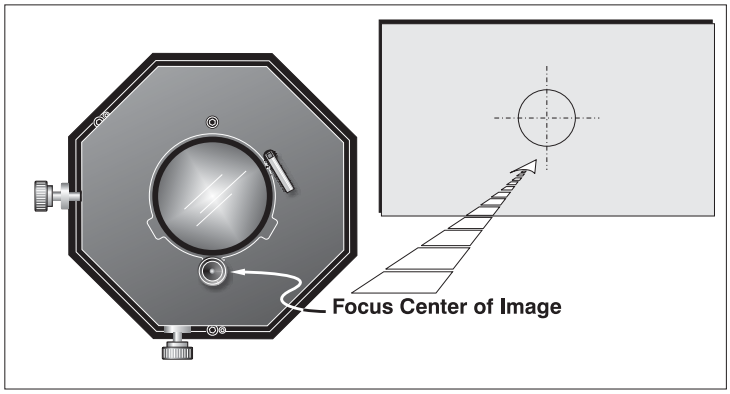

If the focus quality differs from edge-to-edge (whether top, bottom, left or right), the boresight of the lens mount likely needs correction (see *Section 2, Installation and Setup*).

Anamorphic Lens

*NOTES: **1)** The anamorphic lens and its mounting structure are optional components. **2)** To install, replace or use the anamorphic lens, refer to the instructions included with the anamorphic lens mount kit.*

To widen a "squeezed" image into a scope (2.39:1) theatre display, swing the 1.25x anamorphic lens into place in front of the primary zoom lens of the projector. This lens increases magnification across the *width* only, regaining the original proportions in the image, and is often used with screens where side masking can be moved aside.

3.14 Error Conditions

Occasionally the projector will encounter an error condition that can interrupt normal operation. Such a condition can be caused by a simple invalid keypad entry, an input signal error (most common) or a system error. The manner in which users are to be notified of error conditions is set in the *Menu Preferences* menu:

- To see error messages displayed on-screen, select the "**Screen**" option
- To be notified via a serial communication only, select the "**RS232**" option.
- To receive both types of notifications, select "**All**".
- To disable error messages (except for "invalid user key entry", which can't be hidden), select "**Off**".

Note that text-based status/error messages also appear in the LCD Status Display window above the keypad at the rear of the projector. They are accompanied by their corresponding 2-digit error code next to the keypad, legible at a greater distance. Normal operation is indicated by the "00"status code.

- *Refer to full message in the LCD Status Display Window*
- *See also last Table in Section 3*

User Errors

Invalid User Entry

A keypad entry not recognized by the projector triggers a short on-screen error message identifying the problem. For example, if you specify a channel number that is not available, the message "*Invalid Channel* will appear. Or if you try to enter the wrong password, you'll see "*Invalid Password*". Press Enter or Exit to clear the message and try again.

*NOTE: On-screen display of "Invalid User Entry" messages cannot be disabled, even if **Display Error Messages** has been set to "Off".*

Input Signal Errors

An input signal error message occurs if you are in presentation level (i.e., there are no menus present) and have selected an input on which the projector detects a problem. While menus remain operational and any key press will temporarily remove any displayed error message, you must resolve the signal problem in order to permanently eliminate the message.

No Signal

The message *"No signal"* occurs when there is no source signal detected at the selected input—both HSYNC and VSYNC are inactive and the screen background is black. Connect or correct the signal, or try another input.

Bad Sync

The message *"Bad Sync"* occurs when HSYNC or VSYNC are active but the signal cannot be displayed. Such a condition occurs when only one of the two sync signals is present, or when either sync signal is unstable or of the wrong frequency. Correct the signal or select another input.

Other Signal Error Messages

In addition to the common *"Bad Sync"* and "*No Signal*" errors, you may encounter a signal error message indicating that HSYNC and/or VSYNC are either too fast or too slow. When such a message appears, check the frequencies shown in the *Status* menu. If they are correct, then the signal is not recognized by the projector. On some PCs you may be able to change the settings to generate a compatible signal. If the frequencies shown in the *Status* menu are incorrect, check the cabling to see where the problem might originate.

System Warnings / Errors

When the projector encounters a system malfunction, either a *System Warning* message or a *System Error* message may appear. Both types of messages are accompanied by a numerical error code on the "Status" LED and a related text message in the LCD Status Display window. A system malfunction can be cleared with Exit Exit from presentation level, but may indicate the need for service by a qualified service technician.

NOTE: System messages appear on-screen only if ***Display Error Messages*** *has been set to "Screen" or "All".*

System Warnings

A system *warning* indicates that a system malfunction has been detected (see *Status LED Codes*, below). A system warning message replaces any input signal message and disappears when the input signal status changes. While the projector will remain operational, the message indicates the presence of a potentially serious problem that should be reported to the manufacturer. You can press EXIT Exit to remove the message, but for best results you should reset the projector—power the projector down and up again with the ⏻ (power) key.

System Errors

A system *error* message indicates that a serious malfunction has been detected and must be reported to the manufacturer as soon as possible (see *Status LED Codes*, below). The projector will no longer operate and must be reset—power the projector down and up again with the ⏻ (power) key.

The Status LED Codes

If the status code display on the back of the projector shows one of the following values, you have encountered a likely system error requiring the attention of a qualified service technician (see *System Warnings* and *System Errors*, above). Acknowledge and clear the error with Exit Exit from presentation level, or try resetting the projector by powering it off and on again, cooling when necessary. Consult Table 3.6 and contact your dealer if the problem persists.

The specific code number identifies the source of the error detected, and is particularly useful in cases where the projector is too far away to read the accompanying text message in the LCD status display window. For example, the code “27” means the lamp could not be turned on. Error codes for this projector are listed in Table 3.6.

Table 3.6. System Error Codes

Code	Description
GENERAL	
12	Software error. Contact dealer/factory.
13	CRC error in flash ROM. Download new software.
14	Engineering-only programming is complete. Call Christie, replace TIPM.
15	Attempting to download s/w code without being in boot mode
16	Invalid interrupt. Power off/on. If persists, contact dealer/factory.
17	User has forced system to stay in boot mode
18	Attempting to program boot mode without jumper
LAMP / BALLAST	
20	The lamp is unexpectedly on (likely a ballast and/or wiring problem)
22	One or more high-current lamp cables is not connected
26	Lamp door is open (interlock)
27	Lamp cannot ignite
28	Lamp has turned off unexpectedly
29	Lamp ballast is overheated
2C	Lamp communications fault; ballast is not detected
SENSORS for COOLING	
40	Lamp has shut down due to fan failure
46	The red TEC (DMD) has overheated
48	The blue TEC (DMD) has overheated
49	The prism has overheated
4C	Projector has shut down due to critical error
4D	Integrator has overheated
4E	Inadequate lamp air intake rate (interlock)
4F	Inadequate air exhaust rate (interlock)
FANS (note: there are no Fans 1 or 2 in this projector)	
53	Fan 3 has failed (side [rear] intake fan)
54	Fan 4 has failed (side [front] intake fan)
55	Fan 5 has failed (lamp exhaust fan)
56	Fan 6 has failed (LAD fan)
57	Fan 7 has failed (card cage fan)
58	Fan 8 has failed (heat exchanger fan — for liquid cooling system)
10-bit IMAGE PROCESSOR (TIPM)	
60	Boot code CRC failed
61	Unable to program the DigMux PLD
62	Unable to program the Control PLD
63	Unable to program the Bubks PLD
64	Unrecognized ROM type
65	Write to flash ROM failed
66	General TIPM failure
67	Downloaded code will not fit into ROMs
68	Communication error with scaler on TIPM
BUILT-IN KEYPAD or ID EEPROM	
70	Unable to access the built-in keypad EEPROM
71	EEPROM on the built-in keypad has re-initialized
IRAM (a.k.a. Panel Driver) or IRAM/TIPM Communications, or EFIB or Modular Formatters	
80	Unrecognized IRAM (a.k.a. Panel Driver)
81	Unable to program a device on the IRAM
82	TI flash download fault — critical error
83	TI flash download fault — partial success
84	TI flash download fault — partial success
85	TI I^2C fault (write failure)
87	Consecutive faults from modular Formatters
90	Red modular Formatter link failure
91	Green modular Formatter link failure
92	Blue modular Formatter link failure
93	Modular Formatter Architecture error
94	Modular Formatter / DMD mismatch
95	Modular Formatter sequence mismatch
96	EFIB not responding to I^2C messages
BACKPLANE OR OPTIONAL MODULES	
A0	Unable to program the optional interface module
A1	Unable to power the optional interface module
A2	Unable to program the Backplane
A3	Unable to program the Warp Module option (*ChristieTWIST*)

Clear system errors with [Exit] [Exit]*. If necessary, try resetting the projector by powering it off and on again (cooling if necessary). For detailed information, monitor the RS232 IN port. Contact dealer/factory if error persists. Codes omitted from this table should not appear in your projector.*

Section 4

Maintenance

4.1 Warnings and Guidelines

This projector is designed for safe and reliable operation. However safe operation is not assured by design alone; installers, service technicians, trained operators and all other users must maintain a safe environment ***at all times***. Please read through and understand all warnings and precautions before attempting to operate the projector.

Labels and Markings

Observe and follow any warnings and instructions marked on the projector.

The exclamation point within the equilateral triangle indicates related operating/maintenance instructions in the documentation accompanying the projector.

The lightning flash and arrowhead symbol within the equilateral triangle indicates the presence of non-insulated "dangerous voltage" that may be of sufficient magnitude to constitute a risk of electric shock.

General Precautions

Be aware of the following general precautions in all installations:

WARNING

Never look directly into the projector lens or at the lamp. The extremely high brightness can cause permanent eye damage.

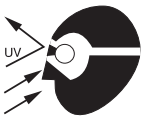

WARNING

For protection from ultraviolet radiation,
keep all projector housings intact during operation.
Protective clothing and safety goggles are recommended.

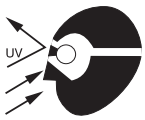

NOTES: ***1)*** *The American Conference of Governmental Industrial Hygienists (ACGIH) recommends occupational UV exposure for an 8-hour day to be less than 0.1 microwatts per square centimeters of effective UV radiation. An evaluation of your workplace is advised to ensure employees are not exposed to cumulative radiation levels exceeding the government guidelines for your area.* ***2)*** *Be aware that some medications are known to increase one's sensitivity to UV radiation.*

WARNING

FIRE HAZARD. Keep hands, clothes, and all combustible material at least 1m away from the concentrated light beam of the lamp.

WARNING

Position all cables where they cannot contact hot surfaces or be pulled or tripped over.

This projector must be installed in an environment which meets the operating range specifications in *Section 6, Specifications*.

⚠ WARNING ⚠
Opening or removing a projector cover requires a qualified service technician.

AC / Power Precautions

⚠ WARNING ⚠
Do not attempt operation if the AC supply is not within the specified voltage range.

Do not allow anything to rest on the power cords. Locate the projector where cords cannot be abused by persons walking on it or objects rolling over it. Never operate the projector if a power cable appears damaged in any way.

Do not overload power outlets and extension cords as this can result in fire or shock hazards.

Note that ***qualified service technicians only*** are permitted to open any enclosure on the product, and ***only if AC has been fully disconnected from the projection head and ballast***.

⚠ WARNING ⚠
SHOCK HAZARD. Disconnect *projection head* and *ballast* from AC before opening any enclosure.

Lamp Precautions

Xenon arc lamps are under high pressure and must be handled with great care at all times. Lamps may explode if dropped or mishandled.

Wear Protective Clothing

Never open the lamp door unless you are wearing authorized protective clothing such as that included in a *Christie Protective Clothing Safety Kit #598900-095*. Recommended protective clothing includes—but may not be limited to—protective gloves, latex lab gloves, double-layer 0.040” acetate face shield, and a quilted ballistic nylon jacket or a welder’s jacket. The shield is provided with the lamp.

⚠ WARNING ⚠
EXPLOSION HAZARD —Wear authorized protective clothing whenever the lamp door is open!

⚠ WARNING ⚠
Never attempt to remove the lamp directly after use. The lamp is under increased pressure when hot and may explode, causing personal injury and/or property damage. Allow to cool completely.

*NOTES: **1)** Christie’s protective clothing recommendations are subject to change. **2)** Any local or federal specifications take precedence over Christie recommendations.*

Cool the Lamp Completely

The arc lamp operates at a very high pressure that increases with temperature. Failure to allow the lamp to sufficiently cool prior to handling increases the potential for an explosion causing personal injury and/or property damage. After turning the lamp off (powering down), it is crucial that you wait ***at least 10 minutes*** before turning off the breakers, disconnecting AC, and opening the lamp door. This provides enough time for the internal lamp cooling fans to properly cool the lamp. Cool ***completely*** before handling. Again, ***always*** wear Christie-approved protective clothing!

⚠ WARNING ⚠

- **Never attempt to access the lamp while it is on.**
- **Wait at least 10 min. after lamp shut-off before powering down, disconnecting from AC, and opening the lamp door.**

⚠ WARNING ⚠

SHOCK HAZARD. Disconnect *projection head* and *ballast* from AC before opening the lamp door.

For all other precautions critical for safe removal and replacement of the lamp, refer to *4.4. Replacing the Lamp & Filter*.

4.2 Maintaining Proper Cooling

The high-intensity lamp and electronics rely on a variety of cooling components to reduce internal operating temperatures. Regular checking and maintenance of the entire cooling system is critical to prevent overheating and sudden projector failure, and helps to ensure reliable operation of all projector components over time.

Ventilation

Vents and louvers in the projector covers provide ventilation, both for intake and exhaust. Never block or cover these openings. Do not install the projector near a radiator or heat register, or within an enclosure.

Air Filter

It is recommended that you replace the air filter (located on the lamp side of the projection head) whenever you replace the lamp—or sooner, in dusty or dirty environments. A clogged filter reduces air flow, and can lead to overheating and failure of the projector. ***Check monthly.*** See *4.4, Replacing the Lamp & Filter* for instructions. It is also recommended that you visually check the laminar airflow device (LAD) located nearby. The LAD should be nearly white or light grey in color.

Liquid Cooler

The liquid cooler system circulates liquid to and from the DMDs in the projection head, reducing their operating temperature to an acceptable level. Periodically check the coolant level visible by removing the igniter grille (rear side grille adjacent to the side input panel)—make sure the reservoir is approximately ½ full.

NOTE: A failure of the liquid cooling system will trigger an over-temperature alarm condition, clearly indicated with status displays/lights at the rear of the projector.

FILLING THE COOLER: The cooler should require filling only upon projector installation. Fill with Christie's 50/50 mix of distilled water and ethylene glycol. Top up as necessary, making sure not to over fill.

⚠ IMPORTANT ⚠

Whenever coolant has been added or replaced, check for a possible airlock upon the next projector power-up.

Exhaust Duct & Lamp Fan Interlocks

After installation, check/maintain operation of both vane switches—one in the exhaust duct and one near the lamp fan—as follows:

1. Turn projector **ON** (lamp is not needed).
2. Turn your extractor fan **OFF**.
3. Confirm that the LCD status display shows that the extractor fan vane switch has failed. Turn fan back **ON** to correct.
4. Block air intake at rear corner (input side) of projection head.
5. Confirm that the LCD status display shows that the lamp fan vane switch has failed. Clear air intake to correct.
6. Repeat all steps every 6 months in permanent installations.

Maintain vane switches as described in *4.3, Maintenance and Cleaning*.

NOTE: If the exhaust duct becomes significantly blocked—or if a fan fails—the projector's airflow sensor should trigger a shutdown before the projector becomes overheated or unsafe. Regardless, ***check the airflow periodically****.*

4.3 Maintenance and Cleaning

To help ensure optimized performance and reliability, check electrical, optical and other components regularly as described below.

⚠ WARNING ⚠

SHOCK HAZARD. Disconnect *projection head* and *ballast* from AC at *BOTH* wall breakers.

Electrical

Do the following every 60 days or 500 hours of projector use (always disconnecting *both* the projection head and ballast from AC first):

- ❑ Check the contact surfaces of positive (anode) and cathode (negative) connections for cleanliness. Clean electrical contact surfaces as necessary to prevent contact resistance from scorching connectors.
- ❑ Verify that all electrical and lamp connections are tight.

Optical

Unnecessary cleaning of optics can be more harmful than helpful, increasing the risk of degrading delicate coatings and surfaces. In this projector, check only the *lens* and *lamp reflector*—maintenance of other optical components requires a qualified service technician. Check these components periodically in a clean, dust-free environment using a high-intensity light source or flashlight. Clean them ***only*** when dust, dirt, oil or other marks are obvious. Never touch an optical surface with your bare hand—always wear latex lab gloves.

When to Check

LENS: A small amount of dust or dirt on the lens has minimal effect on image quality—to avoid the risk of scratching the lens, clean the lens ***only*** if absolutely required. See below.

LAMP REFLECTOR: Inspect the mirror surface (reflector) for cleanliness ***only*** during a lamp replacement, when the lamp is out. If necessary, clean as described below—make sure to ***wear protective clothing*** while inspecting or cleaning. Note that color on the reflector surface may vary—this is normal.

Supplies

For cleaning off dust and/or grease, you will need:

- Soft camel-hair brush
- Dust-free blower—filtered dry nitrogen blown through an anti-static nozzle.
- Dust-free lens tissue such as Melles Griot Kodak tissues (18LAB020), Optowipes (18LAB022) or Kim Wipes or equivalent
- Lens cleaning solution such as Melles Griot Optics Cleaning Fluid 18LAB011 or equivalent. *For lens only.*
- Methanol. *For reflector only.*
- Cotton swabs with wooden stems only
- Lens cleaning cloth/microfibre such as Melles Griot 18LAB024 or equivalent.

Cleaning the Lens

IF DUSTY:

1. Brush most of the dust off with a camel-hair brush and/or blow dust away with compressed air.
2. Fold a microfibre cloth smooth and gently wipe remaining dust particles off the lens. Make sure to wipe evenly with the smooth portion of the cloth that has no folds or creases. Do not apply pressure with your fingers—use the tension in the folded cloth itself to collect the dust.
3. If significant dust is still bound to the surface, dampen a clean microfibre cloth with lens cleaning solution (damp, not dripping). Wipe gently until clean.

IF FINGERPRINTS, SMUDGES, OIL:

1. Brush most of the dust off with a camel-hair brush and/or blow dust away with compressed air.
2. Roll a lens tissue around a swab and soak in lens cleaning solution. Tissue should be damp but not dripping.
3. Gently wipe the surface using a figure-8 motion. Repeat until blemish is removed.

Cleaning the Reflector

IF DUSTY:

1. Brush most of the dust off with a camel-hair brush and/or blow dust away with compressed air.
2. If some dust remains, just leave as is—air circulating at the lamp is unfiltered, so some dust is inevitable. Avoid unnecessary cleaning.

IF FINGERPRINTS, SMUDGES, OIL:

1. First brush dust off with a camel-hair brush and/or blow dust away with compressed air.
2. Fold a clean microfibre cloth and dampen with methanol. Make sure to wipe evenly with the smooth portion of the cloth that has no folds or creases. Do not

apply pressure with your fingers—use the solution in the cloth to collect the dirt.

Other Components

In a normal operating environment check, clean and treat the following components every 6 months or so to help ensure proper lamp and projector function:

LAMP FAN — A clogged lamp fan impeller or motor can reduce air flow, leading to possible overheating and failure of the lamp. Clean/treat the impeller as follows:

1. Vacuum loose dirt from the lamp fan impeller.
2. If necessary, use a brush with hot water and suitable detergent.

⚠ IMPORTANT ⚠

Do not bend the impeller blades or loosen the balancing weights.

IGNITER — Clean the high voltage terminal and insulator to remove accumulated dust or dirt.

AIR FLOW INTERLOCKS — The lamp fan vane switch is located within the lamp cooling compartment. The extractor vane switch is located just inside the top duct on the projector lid. Check and, if necessary, clean the switches to remove accumulated dust or dirt that could impede movement. Within the exhaust duct connected at the top of the projector, adequate airflow must be maintained and routed away from the operating area surrounding the projector (or any nearby projectors). Inspect regularly and confirm that 1) there are no obstructions or “kinks” within the ducting, 2) all air *intake* areas of the projection head and ballast are unobstructed, and 3) exhaust airflow at the top vent is 600 CFM. Make sure lamp wiring does not interfere with vane switch operation. See also *4.2, Maintaining Proper Cooling*.

LAMINAR AIRFLOW DEVICE (LAD) — Whenever checking/replacing the air filter on the side of the projector, also visually check the small square laminar airflow device (LAD) just beyond the filter opening. The LAD should be nearly white in color—if very dark (rare), it may have to be replaced by a qualified service technician. Contact Christie or your dealer.

4.4 Replacing the Lamp & Filter

The high brightness of your projector is provided by a Xenon lamp mounted at two ends within a reflector and housed in the locked lamp compartment of the projection head. When the lamp approaches the end of its life, it must be replaced—do not exceed warranted lamp life by more than 20%, as an old lamp becomes increasingly and dangerously fragile, resulting in possible explosion.

To determine the age of your current lamp, consult the *Status* menu or *Lamp* menu.

It is recommended that you replace the air filter with every lamp replacement, or sooner in dusty or dirty environments. Check its condition monthly in all projectors.

Lamp Replacement Procedure

NOTE: For this procedure you will need a compatible Christie Xenon CDXL or CXL lamp as shown in ***Section 6, Specifications****—never install a lamp intended for a different projector.*

⚠ WARNING ⚠

Make sure to use the correct wattage lamp supplied by Christie.

⚠ WARNING ⚠

Lamp replacement is to be done by a qualified service technician only.

⚠ WARNING ⚠

EXPLOSION HAZARD —Wear authorized protective clothing whenever the lamp door is open! Never apply a twisting or bending force to the quartz lamp body.

Read and follow all other general lamp precautions in *4.1, Warnings and Guidelines*.

STEP 1 ' ***Turn off the projector***

Once off, allow the fans to run at least 10 minutes for cooling the lamp.

⚠ WARNING ⚠

Never attempt to remove the lamp when it is hot. The lamp is under great pressure when hot and may explode, causing personal injury and/or property damage. Allow to cool completely.

STEP 2 ' Set the ballast breaker (power switch) to **OFF.**

STEP 3 ' ***Disconnect projection head and ballast from AC supply***

⚠ WARNING ⚠

SHOCK HAZARD. Disconnect *both* components from AC.

STEP 4 ' ***Open the lamp door***

With protective clothing and shield on, unlock the lamp door and open it. Refer back to Figure 2.19. If desired, release the tethered latch mechanism to remove the door entirely.

STEP 5 ' ***Open lamp cooling compartment***

Turn knob to open the inner lamp cooling compartment and reveal the cathode end (–) of the lamp. Refer back to Figure 2.19.

STEP 6 ' ***Remove the old lamp and inspect reflector***

6.1. Loosen set screws from negative/cathode (rear, 7/64”) and positive/anode (front, 3/16”) lamp connectors. These screws are shown in Figure 4.2. ***Make sure to apply minimal torque and DO NOT STRESS the quartz tube.***

6.2. ***Carefully*** slip the positive anode connector off the front of the lamp.

6.3. Handling by the ***cathode end only***, unscrew the lamp from the rear connector and carefully remove from the projector. ***Immediately*** place the lamp inside the protective cover (saved from previous installation) and then seal it in a heavy carton on the floor where it cannot fall or be bumped.

⚠ WARNING ⚠

Handle box with extreme caution—the lamp is hazardous even when packaged. Dispose of lamp box according to safety regulations for your area.

6.4. With the lamp removed, visually inspect the reflector for dust. Clean if necessary as described in *4.3, Maintenance and Cleaning*.

STEP 7 ' Remove new lamp from protective cover

7.1. Remove tape, knurled nut and locking star washer (if present) securing the lamp within its cover.

7.2. Handling at the ends only, extract the lamp from the cover. Set aside the protective cover for re-use in your next lamp disposal or for warranty return of an expired lamp.

STEP 8 ' Install new lamp

8.1. ***With protective clothing and face shield on,*** insert the threaded cathode (–) end of the lamp into the negative lamp connector nut located in the rear of the lamp compartment and screw in fully (Figure 4.1, left portion). Hand-tighten only.

⚠ IMPORTANT ⚠

Handle by the cathode/anode end shafts only, never the glass. Do *not* over-tighten. Do *not* stress the glass.

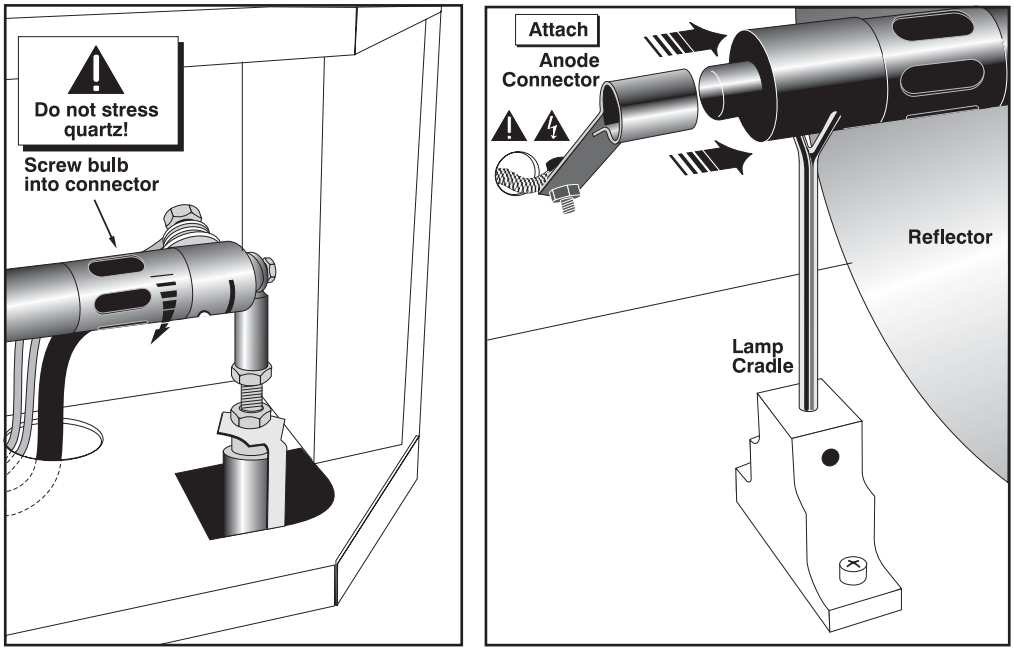

Figure 4.1. Install Bulb

8.2. Rest the anode (+) end of the lamp on the lamp cradle as shown in Figure 4.1, right, and slip the positive lamp connector over the bulb end.

8.3. Tighten set screws in both negative and positive lamp connectors (Figure 4.2).

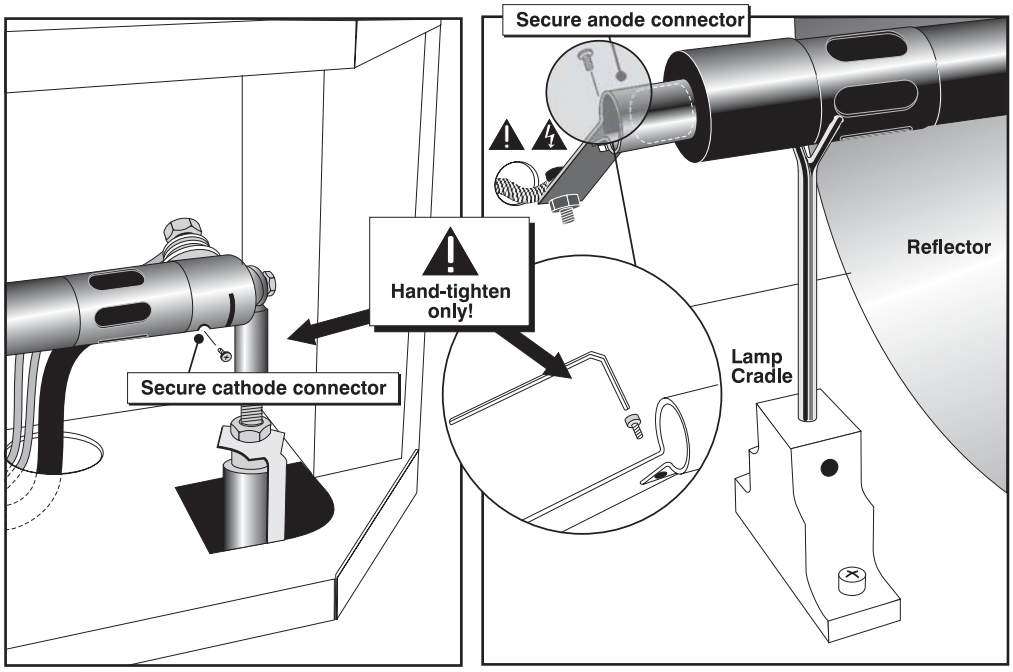

Figure 4.2. Secure bulb at cathode (–) and anode (+) connectors

IMPORTANT

Proper electrical contact prevents resistance in the lamp connectors.

If you accidentally touch the quartz body of the lamp with your bare hands, clean the surface as described in *4.3, Maintenance and Cleaning*.

STEP 9 ' Check Leads

Make sure that the anode (+) lead between lamp and igniter is well away from any projector metal such as the reflector or firewall.

WARNING

Leads too close to metal parts will cause arcing during starting pulse. This is a *SAFETY HAZARD*, and the lamp may not ignite.

STEP 10 ' Close cooling compartment and lamp door

The projector will not operate unless the louvered door is locked shut.

STEP 11 ' Record the LAMP INSTALLED

With a blue dot label or dry-erase pen, mark the lamp door's LAMP INSTALLED label to indicate the size of the newly installed lamp — 2.0, 3.0, 4.5, or 6.0 kW. A supply of blue dot labels is secured inside the front cover of this manual.

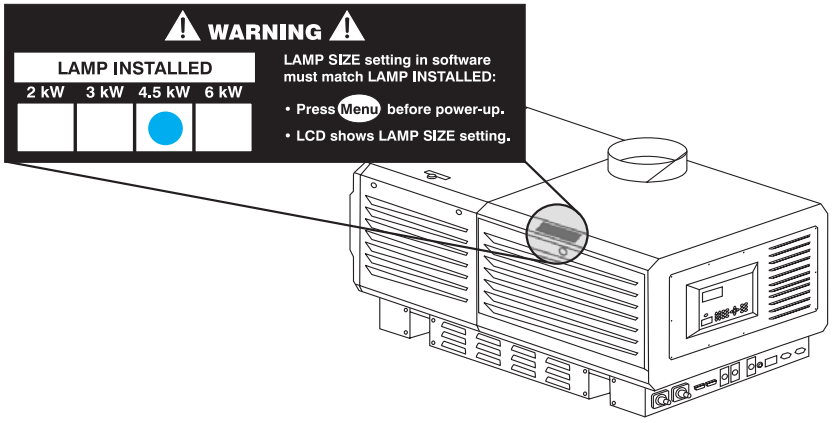

Figure 4.3. Always Mark the "Lamp Installed" Label
(EXAMPLE)

STEP 12 ' Re-connect to AC and turn breaker to ON

Re-connect the projection head and the ballast to AC (see *2.1, Quick Setup*), then set the ballast breaker to **ON**.

STEP 13 ' Set proper LAMP TYPE (Menu)

NOTE: Not required if your new lamp is the ***same Lamp Size*** *(in kilowatts) as the previous lamp.*

If your new lamp is rated *higher* or *lower* than the old lamp, record the new *Lamp Size* (2.0, 3.0, 4.5 or 6.0 kW) in projector memory as described below. This setting establishes the proper range of power available for the installed lamp, ensuring that the new lamp is neither under-powered nor over-driven upon power-up.

WARNING
Do not attempt to ignite the lamp until its size (kW) is correctly defined in projector memory.

1. Refer back to Figure 3.24. Checking/Setting Lamp Size. Press Menu. The Status Display at the rear of the projector will show a "Lamp Size" of 2000, 3000, 4500 or 6000 watts, depending on its last setting. Factory default=6000.
2. Enter either the Lamp Password shown in Figure 3.24, or the Christie service password. *A password is required unless the "Enable Password" service option has been turned off.*
3. Use ◀ ▶ to select which lamp is currently installed. Make sure the lamp type is also indicated on the lamp door label (see Figure 4.3).
4. When the Status Display shows the correct lamp type, the projector and lamp can be turned on.

STEP 14 ' Power up & Ignite the Lamp

Press ⏻ on any keypad. The projector will power up and the lamp will ignite. Wait approximately 10 minutes for the projector and lamp to warm up before continuing.

STEP 15 ' Adjust lamp position

Make sure the projector and lamp are warmed up. Then, from the *Lamp* menu, go to the *LampLOC* submenu and perform a "Do Auto" adjustment. It will take a minute or two as internal motors and sensors determine the ideal placement of the lamp. Proper

LampLOC ensures maximum brightness, with the lamp well-centered with its reflector and distanced correctly from the rest of the illumination system. Refer to *3.9, Working with the Lamp* for details.

STEP 16 ' ***Record the serial number of the new lamp***

1. In the *Lamp* menu, select “Change Lamp”.
2. In the *Lamp S/N* text box, enter the serial number.
3. Press ↵ (or Enter on the standard remote keypad) to record the number and to reset the lamp timer. The timer will now begin to log time for the new lamp.

Filter Replacement Procedure ' Replace the air filter whenever the lamp module is replaced, or more frequently if operating the projector in a dusty or dirty environment. ***Check monthly in all cases.*** The filter is located on the lamp side of the projection head, near the front.

See Figure 4.4.

BEFORE YOU BEGIN ' ***Power down and disconnect from AC***

Follow steps 1-3 from the *Lamp Replacement Procedure*, above.

STEPS 1-2 ' ***Open/remove filter door***

Loosen 2 corner screws (flat screwdriver), and lift off door.

STEPS 3-4 ' ***Replace air filter***

Slide the old filter down-and-out and discard. Insert the new air filter, following the labeling for proper inside/outside orientation. Slide all the way up, under top tabs.

⚠ WARNING ⚠

Use only Christie filters. Never operate the projector without the filter installed.

STEPS 5-6 ' ***Close/replace filter door***

With the filter in place, insert the bottom tabs of the filter door into the corresponding slots, close the filter door, and secure with 2 screws.

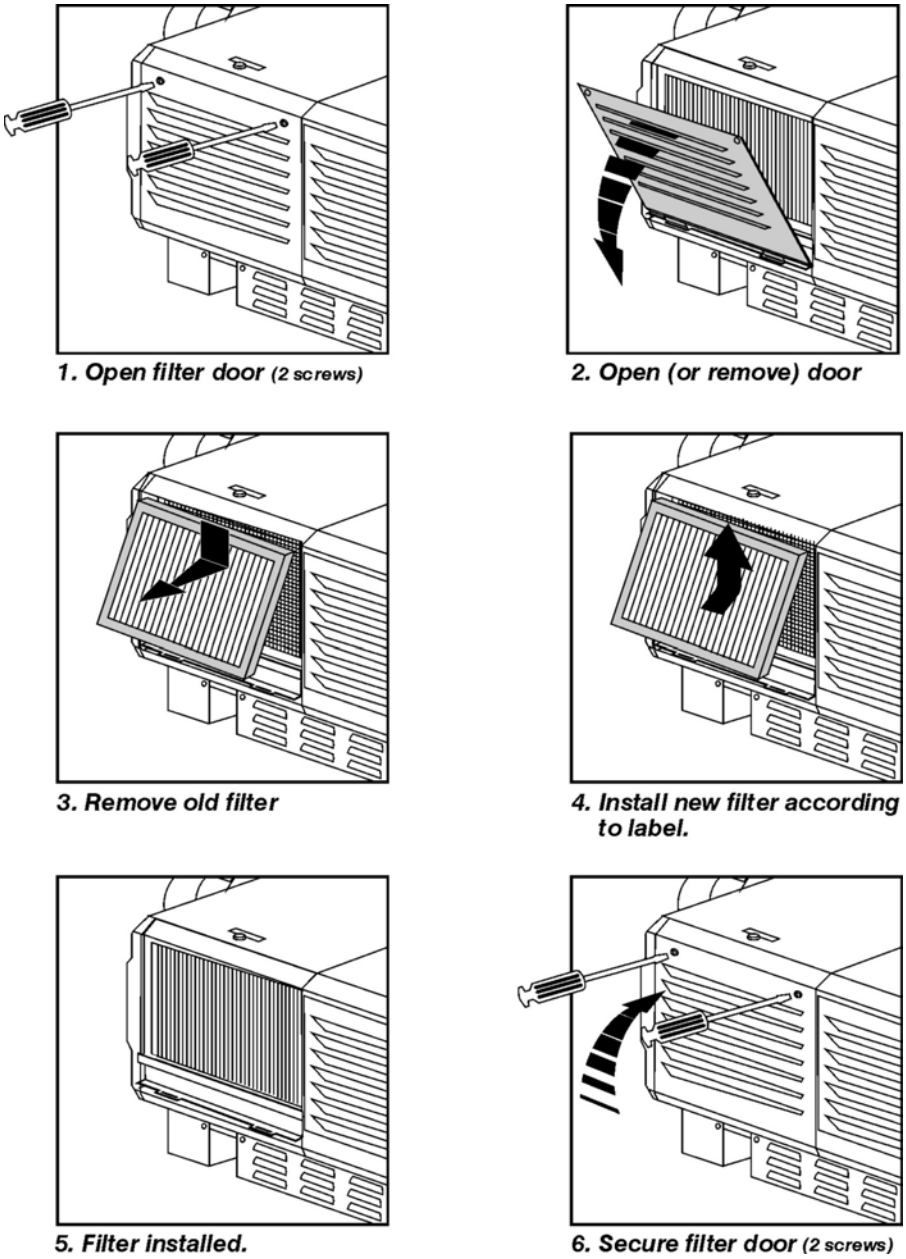

Figure 4.4. Replacing the Air Filter

4.5 Replacing a Lens

A variety of lenses can accommodate different throw distances and specific types of installations—see *Appendix D*. To replace or change a lens, see Figure 2.18 and:

1. Release the lens safety tether from the lens ring clamp (one screw).
2. Release the lens locking lever (**UP** position).
3. Pull out lens and replace as described in *2.4, Installing a Lens, Lamp & Cooling*. Insert all the way back, following **UP** label on lens.
4. Make sure to secure with lens locking lever (**UP** position) and safety tether.

NOTES: ***1)*** *Make sure the lens UP label faces up, otherwise boresight may need readjustment.* ***2)*** *Keep the lens safety tether attached to the projector for use with any lens ring clamp. This cable* ***must*** *be used with a flown projector.*

Section 5

Troubleshooting

If the projector does not appear to be operating properly, note the symptoms present and use the following guide to assist you. If you cannot resolve the problems yourself, contact your dealer for assistance.

*NOTE: A **qualified service technician** is required when opening the projector to diagnose any "probable cause".*

5.1 Power

Projector Will Not Start '

1. Check for green "Proj. Status" light on projector. If not on, check all breakers on the ballast and at the wall.
2. Is the ballast breaker staying on? If it is "tripping" to OFF position, there is an electrical problem requiring investigation by a certified electrician.

5.2 Lamp

Lamp Does Not Ignite '

1. Make sure the ballast is on (indicated by the breaker in the "up" position), and that all 4 ballast cables are properly connected to the projection head.
2. If the lamp won't ignite, there may be an interlock failure such as an open lamp door, failed lamp fan, airflow problem at the extractor, etc. The LCD status display also indicates this.
3. If a temperature is too high ("DMD over critical temp limit", e.g.), the lamp will not ignite until the temperature is low enough. Cool the projector and try again.
4. With the lamp off, press (Menu) and make sure the lamp size shown in the LCD status display window matches that of the installed lamp (2.0 kW, 3.0 kW, 4.5 kW or 6.0 kW). This should also be indicated on the *Lamp Installed* label.
5. Check lamp anode and cathode connections (qualified service technician required).
6. Check communication cable connections between the ballast and projection head.
7. For suspected communication failures, power-down the projector and try again.
8. If the lamp does not ignite after a second and third try, replace the lamp.
9. If there is no "buzzing" or high voltage "snaps" indicating that the igniter is attempting ignition, there may be a problem with the igniter itself (Christie service required).
10. If there is a brief "buzz" or snapping sound (which is an attempt at ignition) but the lamp still does not ignite, the lamp likely needs to be replaced.

Lamp Suddenly Turns Off

1. Try increasing the lamp power.
2. The DMDs in the projection head may be overheated (this also triggers a message on the LCD status display window).
3. An interlock, such as an open lamp door or inadequate airflow to the extractor, may be interrupting lamp function.
4. Replace the lamp.

Flicker, Shadows Or Dimness

1. *LampLOC™* may need re-adjustment—see *3.9, Working With the Lamp*.
2. *LampLOC™* may be in the middle of its adjustment. Wait until completed.
3. Increase lamp power, if possible.

LampLOC™ Does Not Seem to Work

1. Try adjusting lamp positions individually in the LampLOC submenu—display a Full White test pattern and watch the "Intensity" reading for changes indicating lamp movement.
2. If the motors do not seem to respond, manual adjustment may be required. ***Danger. Qualified service technician only.***

LiteLOC™ Does Not Seem To Work

1. Make sure "Intensity" is selected in the *Lamp* menu. Other lamp modes disable LiteLOC™ .
2. If the lamp power has increased to its maximum in order to maintain a LiteLOC™ setting, LiteLOC™ is automatically terminated. If the values shown in the *Lamp* menu indicate that the lamp power has reached this "over-drive" state, either reduce your LiteLOC™ setting or install a new lamp.

5.3 Ethernet

1. Make sure the Ethernet settings are valid for your site—all network devices should have the *same* subnet mask and *unique* IP addresses.
2. Make sure to save any address change, and ***re-boot (cycle power) to implement***.
3. Make sure the projector is connected to the network before changing its IP address.
4. If you still have trouble establishing communications with a projector added to an existing Ethernet network, the projector's IP address is likely in conflict with another address already in use. Contact your network administrator.

5.4 Displays

Symptom ***Blank screen, no display of image…***

CAUSE/REMEDY:

1. Confirm all power connections are still OK.
2. Make sure the lens cap has been removed.
3. Make sure the shutter is OPEN.
4. Make sure there is not a full black test pattern selected for display—press Menu ▲ to access test patterns, then cycle patterns with ◀ ▶ keys.
5. Is the input selected? Check connections.

Symptom ' ***Severe motion artifacts…***

CAUSE / REMEDY:

1. Most likely there is a synchronization problem with reversed 3/2 pull-down in 60Hz-to-24Hz film-to-digital conversion in your source. Correct at the source.

Symptom ' ***Image appears "squeezed" or vertically stretched into center of screen***

CAUSE / REMEDY:

1. Check your Resizing selection.
2. The anamorphic lens (optional) may be needed for this source.

Symptom ' ***The projector is on but there's no display...***

CAUSE / REMEDY:

1. Was a lens cover accidentally left on? Remove lens cover.
2. Make sure the shutter is OPEN.
3. Is the ballast on? Check the breaker position to make sure the ballast is on.
4. Is the lamp ignited? Check for interlock problems such as an open lamp door.
5. Is the correct input selected?
6. Is the source connected properly? Check the cable connections and make sure the correct source is selected.
7. Is AC power connected?
8. Can you access test patterns? If so, check your source connections again.

Symptom ' ***The display is jittery or unstable…***

CAUSE / REMEDY:

1. If the display is jittery or blinking erratically, ensure that the source is properly connected and of adequate quality for detection. With a poor quality or improperly connected source, the projector will repeatedly attempt to display an image, however briefly.
2. The horizontal or vertical scan frequency of the input signal may be out of range for the projector. Refer to *Section 6, Specifications* for scan frequency ranges.
3. The sync signal may be inadequate. Correct the source problem.

Symptom ' ***The display appears unusually dim or faint…***

CAUSE / REMEDY:

1. Brightness and/or contrast may be set very low.
2. The source may be double terminated. Ensure the source is terminated only once.
3. The source (if non-video) may need a different sync tip clamp location.
4. The lamp may not be properly aligned in the projector. Use LampLOC adjustment in the Lamp Menu.

Symptom ' ***The upper portion of the display is waving, tearing or jittering…***

CAUSE / REMEDY:

1. This can sometimes occur with video or VCR sources. Check your source.

Symptom ' ***Portions of the display are cut off or wrap to the opposite edge…***

CAUSE / REMEDY:

1. Resizing and/or blanking may need adjustment.

Symptom ' ***The display appears compressed (vertically stretched)…***

CAUSE / REMEDY:

1. The frequency of the pixel sampling clock is incorrect for the current source.
2. Resizing, vertical stretch and positioning options may be improperly adjusted for the incoming source signal.
3. You may need an anamorphic lens for sources that have been supplied in a re-sized and vertically stretched format.

Symptom ' ***Data is cropped from edges***

CAUSE / REMEDY:

1. Check settings for Blanking.
2. If incoming data is still missing from the image, reduce the image size to within the display area available in the projector.

Symptom ' ***Display quality appears to drift from good to bad, bad to good…***

CAUSE / REMEDY:

1. The source input signal may be of low quality.
2. The H or V frequency of the input may have changed at the source end.

Symptom ' ***The display has suddenly frozen…***

CAUSE / REMEDY:

1. If the screen blacks out inexplicably, it is possible that excessive voltage noise on the AC or ground input has interrupted the projector's ability to lock on to a signal. Power down the projector and disconnect from AC. Then plug in again and power up as usual.

Symptom ' ***Colors in the display are inaccurate…***

CAUSE / REMEDY:

1. The color, tint, color space, color temperature and/or other settings may require adjustment.
2. Make sure you are using the proper channel for this source.

Symptom ' ***The display is not rectangular…***

CAUSE / REMEDY:

1. Check leveling of the projector. Make sure that the lens surface and screen are as parallel to each other as possible.
2. Is the vertical offset correct? Adjust as necessary using the vertical offset knob.
3. Make sure the aperture in the anamorphic lens (if present) is correctly oriented.

Symptom ' ***The display is "noisy"…***

CAUSE / REMEDY:

1. Display adjustment at your input source may be required. Adjust pixel tracking, phase and filter. Noise is particularly common on YPbPr signals from a DVD player. (If using a PC source, adjust using a high-frequency test pattern with one pixel on/off throughout.)
2. The video input may not be terminated. Make sure the video input is terminated (75 S). If it is the last connection in a loop-through chain, the video input should be terminated at the *last* source input only.
3. The input signal and/or signal cables carrying the input signal may be of poor quality.
4. If the distance between the input source device and the projector is greater than 25 feet, signal amplification/conditioning may be required.
5. If the source is a VCR or off-air broadcast, detail may be set too high.

Section 6

Specifications

6.1 Specifications

NOTES: 1) Due to continuing research, specifications are subject to change without notice. 2) All lens performance specifications assume a standard primary lens is installed.

Display

Panel Resolution and Refresh Rate

Pixel format (H x V) on 3 DMDs	2048 x 1080
Refresh rate, 2D displays	23.97 – 65 Hz
Refresh rate, frame-doubled 3D	23.97 – 96 Hz)
Input-to-Image Delay	2 frames +30 lines (if locked to input) 3 frames (no timing restrictions)

Achievable Brightness *requires CDXL lamp with maximum output conditions*

If 2.0 kW lamp: 9500 ANSI lumens
If 3.0 kW lamp: 15000 ANSI lumens
If 4.5 kW lamp: 22000 ANSI lumens
If 6.0 kW lamp: 25000 ANSI lumens

NOTE: In most cases, use of a high-contrast lens will reduce brightness by approximately 5%

Achievable Contrast Ratio *with CDXL lamp and standard optical aperture installed*

With standard high-brightness lens: 650 ANSI, 1600:1 full field
With optional high-contrast lens: 650 ANSI, 1800:1 full field

Colors and Gray Scale

Default color temperature	6500K
Range of color temperature adjustment	3200K – 9300K
Displayable colors	1.1 billion
Gray scale resolution	10 bits each per RGB component

Gamma

Adjustable from 1.8 – 2.8 (default = 2.2 ± 0.4)

Lenses

For all standard high-brightness or optional high-contrast lenses:

Primary Zoom Lenses	Maximum Image Offset as Distance (pixels)	Max. % of Image Below or Above Lens Center, or to One Side of Lens Center ✱
1:1 fixed	540 ↕ 410 pixels ↔	100% ↕ (vertical), 70% ↔ (horizontal)
1.25 – 1.45:1 zoom	540 ↕ 410 pixels ↔	100% ↕ (vertical), 70% ↔ (horizontal)
1.45 – 1.8:1 zoom	540 ↕ 410 pixels ↔	100% ↕ (vertical), 70% ↔ (horizontal)
1.8 – 2.4:1 zoom	540 ↕ 410 pixels ↔	100% ↕ (vertical), 70% ↔ (horizontal)
2.2 – 3.0:1 zoom	540 ↕ 410 pixels ↔	100% ↕ (vertical), 70% ↔ (horizontal)
3.0 – 4.3:1 zoom	540 ↕ 410 pixels ↔	100% ↕ (vertical), 70% ↔ (horizontal)
4.3 – 6.0:1 zoom	540 ↕ 410 pixels ↔	100% ↕ (vertical), 70% ↔ (horizontal)
5.5 – 8.5:1 zoom	540 ↕ 410 pixels ↔	100% ↕ (vertical), 70% ↔ (horizontal)

✱ *100% = image moved by a distance of **540** pixels up or down (100% of image half-height).*
*70% = image moved by distance of **410** pixels left or right (40% of image half-width).*
Simultaneous vertical/horizontal offsetting may limit the range of each.
*See illustrations in **2.3, Projector Position and Mounting**.*

Inputs

Total number of available inputs	6 *(5 supplied as standard)*

Analog: RGB / YPbPr (5 BNCs at INPUT 1)

Scan format	Interlaced or Progressive
Signal types / color spaces	• RGB • YPbPr
Horizontal frequency range	15 – 120 kHz
Vertical frequency range ✻	23.97 – 150 Hz
Pixel clock rate	13 – 220 MHz min.
Active pixels per scan line (H)	640 – 2048
Active lines per field/ frame (V)	200 – 1536
A/D conversion resolution	10-bit
Input levels	
R,B,G,Y — with sync	$1.0V_{p-p}$ ±2 dB ($0.79V_{p-p}$ – $1.26V_{p-p}$)
R,G,B — without sync	$0.7V_{p-p}$ ±2 dB ($0.56V_{p-p}$ – $0.88V_{p-p}$)
Pb,Pr	$0.7V_{p-p}$ ±2 dB ($0.56V_{p-p}$ – $0.88V_{p-p}$)
DC offset	± 5V
Nominal impedance	75 S
Max. return loss (VSWR)	1.2:1 dB @ 200 MHz

✻ *Specifies **frame** rate for non-interlaced sources and **field** rate for interlaced sources. Input frequencies higher than the maximum panel refresh rate are displayed at a lower rate.*

Analog: Video (INPUTS 3 and 4)

Signal formats	Composite (CVBS), S-Video (Y/C)
Connectors	
• Composite Video *(INPUT 3)*	Female RCA
• S-Video *(INPUT 4)*	4-pin miniature DIN
Video standards	NTSC, NTSC 4.43, PAL, PAL-M, PAL-N, PAL-60 & SECAM
A/D conversion resolution	8-bit
Input levels	
Composite	$1.0\ V_{p-p}$ ± 3dB *(including sync tip)*
S-Video, Luma (Y)	$1.0\ V_{p-p}$ ± 3dB *(including sync tip)*
S-Video, Chroma (C)	630 mV_{p-p} nominal (burst)
DC offset	± 2V
Nominal impedance	75 S
Maximum return loss (VSWR)	1.2:1 dB @ 6 MHz

Analog: Sync (INTERLACED OR PROGRESSIVE SCAN FORMAT)

Input levels *(for composite or separate H & V)*	$0.5V_{p-p}$ – $4.0V_{p-p}$
Impedance *(for composite or separate H & V)*	75 S
Sync type *(for composite or separate H & V)*	• Separate H and V • Bi-level or tri-level sync-on-green • Bi-level or tri-level composite • Serrations and/or Equalization pulses • MacroVision™ for stnd. & prog. video
Polarity *(for composite or separate H & V)*	Positive or negative
Maximum return loss (VSWR)	1.2:1 dB @ 200 MHz

DVI-I (INPUT 2)

Interface standard	DDWG DVI 1.0
Signal types / color spaces	• RGB (digital or analog) • YPbPr (analog) • YCbCr (digital) *not supported in v1.0* s/w
Pixel clock rate	25 – 165 MHz
Analog sync input impedance	1 kS
Maximum cable length	5 meters (16 ft.)
Supports EDID and HDCP	

*For all other DVI specifications, **see Analog: RGB / YPbPr** on previous page.*

Dual SD/HD-SDI (INPUT 5 or 6, STANDARD WITH PROJECTOR)

Number of inputs	2, each with active loop-through
Connector type	BNCs, 75S
Supported interface standards	SMPTE 259M *(13.5 MHz clock modes only)* SMPTE 292M
Signal types / color spaces	Serial digital YCbCr *(4:2:2 only)*
Pixel clock rates supported	13.5 MHz, 74.25 MHz, 74.25/1.001 MHz

Control

Wired Remote Keypad (CONVERTED FROM IR REMOTE KEYPAD)

2 inputs on projection head	• 3-pin XLR connector (rear) • 3.5mm phono jack (side)
Input levels	• High = 2.2 V – 5.6 V (or open) • Low = -0.6V – 0.9V @ 1mA
Voltage output	+5VDC ±5%
Current output	100 mA nominal, 250 mA max.
Cable length	25 ft.

IR Remote Keypad

Number of IR sensors on projector	2 (front and rear)
Wavelength of peak sensitivity	950 nm
Modulation (carrier) frequency	36 kHz (nominal)
Encoding method	bi-phase
Range	100 ft.

Assumes no fluorescent lighting interference.
If range appears limited, shield the IR sensor, turn off lights, or change your fluorescent ballast.

Ethernet

Number of ports	1
Standard	100Base-TX
Connector type	RJ-45
Max. baud rate	115200

RS232 Serial Input

Number of connectors	2
Connector type	9-pin subminiature D (female=in, male=out)
Max. baud rate	115200

RS422 Serial Input

Number of connectors	3
Connector type (side input panel)	9-pin subminiature D (1)
Connector type (rear connector panel)	6-pin XLR (2)
Max. baud rate	115200

GPIO Input

Number of I/O lines	7, each assignable as input or output
Connector type	9-pin subminiature D
Type of connection	Dry contact
Output sink current *(logic low)*	100 mA @ 1V
Maximum power output	+12VDC @ 200 mA *(NOTE : shared with 9-pin RS422 port)*

Control Port *(FROM BALLAST)*

Number of connectors	1
Interface	RS232
Connector type	9-pin subminiature D

Ballast Ports

Number of connectors	1
Interface	+5V TTL-compatible *(NOTE: opto-isolated at ballast end)*
Connector type	9-pin subminiature D
Number and type of outputs	1 – lamp enable (low = enable lamp) 4 – safety interlocks (high = disable lamp) 1 – +5VDC for opto-isolated interface

Power ⚠

Projection head

Projection Compartment AC ***(near Panel B, at front)***

Connector type & rating	(1) IEC 320-compatible, 10 A rating
Voltage range, nominal	200 – 240 VAC ±10%
Line frequency, nominal	50 – 60 Hz
AC input rating	10 A
Max. inrush current ✻	35 A
Max. current consumption ✻	3 A
Max. power consumption ✻	700 W

Lamp (DC)

Max. operating voltage	46 VDC
Max. start-up voltage	155 VDC
Max. current consumption	180 A
Max. power consumption	6600 W
Connector type	Female CAM Lock receptacle (+red) Male CAM Lock receptacle (–black)

✻ *With extractor*

7 kW 3-Phase Ballast (38-814001-01)

Nominal Voltage per ϕ	• 208 VAC (N. America / Japan) • 400 VAC (Europe)
Nominal Operating Range	• 200-230 ± 10% (N. America / Japan) • 380-415 ± 10% (Europe)
Line Frequency	50-60 Hz nominal
Inrush current (max.) *note: excluding lamp*	<50 A
Current consumption per phase (max.) @ 6.6 kW	• 28 A @ 208 VAC (N. America / Japan) • 16 A @ 400 VAC (Europe)
Power consumption (max.)	• 14.4 kVA (9.1 kW), all regions
Current rating (continuous) of 3-phase AC input at breaker	30 A, all regions
Breaker rating	50 A
BALLAST OUTPUT TO PROJECTION HEAD	
Operating voltage range	18-46 VDC
Start-up voltage (open current)	125-155 VDC
Operating current range	50-180 A
Ripple	1% max @ 25°C
Control ports	See *Control Port* and *Ballast Ports* on previous page

Lamps

Ballast	CXL/CDXL Lamps (kW)	Current Range (amps)	Lamp Life (warranty hrs.)
3 kW Single-Phase or 7 kW 3-Phase	CDXL-20 (2.0)	66-88	1200 full / 2400 pro-rated
	CXL/CDXL-30 (3.0)	82-120	720 full / 1440 pro-rated
3-Phase 7 kW	CXL/CDXL-45 (4.5)	112-150	60 full / 900 pro-rated
	CXL/CDXL-60 (6.0)	126-170	50 full / 500 pro-rated

Notes: 1) Current range shown includes "over-drive", which is 10% more than the original lamp rating. 2) The 3 kW ballast is not currently available. 3) Optimized brightness requires CDXL lamp.

Type	Xenolite®
Stand-by lamp power level for 4.5/6.0	60% of lamp's maximum current rating
Stand-by lamp power level 2.0/3.0	75% of lamp's maximum current rating
Motorized adjustment of position	3-axis, 0.25" range for each

Reflectors

10,000 hours

Audible Noise

70 dBA maximum *(excluding extractor fan)*

Safety

- **UL 60950** and **CAN/CSA C22.2. No. 60950** (2000, 3rd edition, bi-national)
- **IEC 60950** (1999, 3rd edition)

EMC Emissions

- **FCC CFR47, Part 15, Subpart B, Class A** — Unintentional Radiation
- **CISPR 22: 1997 / EN55022: 1998** — Radio disturbance characteristics, ITE

EMC Immunity

- **CISPR 24 / EN55024:1998** (all parts of immunity characteristics for ITE)

Operating Environment

Temperature	10°C to 35°C (50°F to 95°F)
Humidity (non-condensing)	20% to 80%
Altitude	0 – 3000 meters
Tilt, any angle	15° max.

Non-Operating Environment '

Temperature	-25C to 65°C (-13°F to 149°F)
Humidity (non-condensing)	0% to 95%

Weight & Size '

NOTES: 1) Excludes lens, cabling, extractor. 2) All weights subject-to-change

Shipping Weights		
Projection Head	**Ballast**	**FredFrame**
360 lb (163 kg)	145 lb (66 kg)	153 lb (70kg)
Installed Weight		
Projection Head	**Ballast**	**FredFrame**
260 lb (118 kg)	110 lb (50 kg)	105 lb (48 kg)

See page 6-7:

Standard Dimensions (W x L x H)|	**25.6”** x **49.0”** x **20”** (**65** cm x **124.5** cm x **50.8** cm)
Size with Anamorph (W x L x H) *(incl. anamorphic lens mount & lens)*	**25.6”** x **64.6”** x **20”** (**65** cm x **164.1** cm x **50.8** cm)

See Figure 5.1 on the following page.

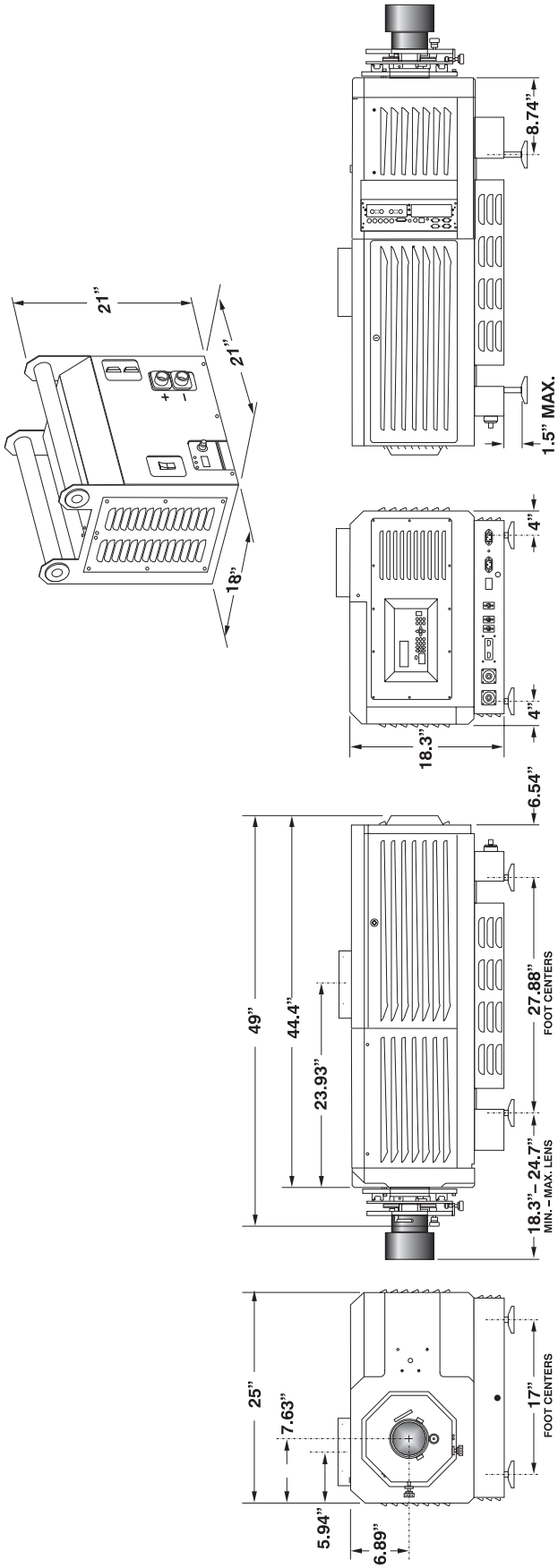

Figure 5.1. Roadie 25K Dimensions

Standard Components

Projection head with "brick" Rental/Staging remote keypad
Lamp ballast (7 kW)
Heat Extractor (50/60 Hz)
Lamp *(choices shown on page 8-4)*
1 primary zoom lens, high-brightness *(see below)*
Cabling kit and misc. assembly hardware
Roadie 25K User's Manual

Options

Standard High-Brightness Lenses

- ❑ 1:1 fixed lens — part# 38-809071-01
- ❑ 1.25 – 1.45 :1 — part# 38-809073-01
- ❑ 1.45 – 1.8:1 — part# 38-809074-01
- ❑ 1.8 – 2.4:1 — part# 38-809075-01
- ❑ 2.2 – 3.0:1 — part# 38-809076-01
- ❑ 3.0 – 4.3:1 — part# 38-809077-01
- ❑ 4.3 – 6.0 :1 — part# 38-809072-01
- ❑ 5.5 – 8.5 :1 — part#38-809078-01

High-Contrast Lenses

- ❑ 1.25 – 1.45 :1 — part# 38-809079-01
- ❑ 1.45 – 1.8:1 — part# 38-809061-01
- ❑ 1.8 – 2.4:1 — part# 38-809052-01
- ❑ 2.2 – 3.0:1 — part# 38-809053-01
- ❑ 3.0 – 4.3:1 — part# 38-809069-01
- ❑ 4.3 – 6.0 :1 — part# 38-809081-01
- ❑ 5.5 – 8.5 :1 — part#38-809080-01

• Anamorphic Lens Mount — part# 38-813019-02
• 1.25x Anamorphic Lens — part# 38-809054-01

Lamp Ballasts

- ❑ 7 kW — part# 38-814001-01
- ❑ 3 kW — part# 38-814002-01 *(NOTE: not yet available)*

Ballast Cable Kits

- ❑ 2 meters (6½ ft.) — part# 38-814003-01
- ❑ 7.5 meters (25 ft.) — part# 38-814004-01
- ❑ 15 meters (50 ft.) — part# 38-814005-01
- ❑ 30 meters (100 ft.) — part# 38-814006-01

Other

- ❑ FredFrame™ Rigging Frame — part# 38-814-007-01
- ❑ Extra Heat Extractor Kit (50/60 Hz) — part# 38-814008-01
- ❑ Side-Venting Duct Adapter Kit *(required for stacked projectors)*
- ❑ F# Aperture Kit *(set of 4)* — part# 38-813028-01
- ❑ Yellow Notch Filter Kit — part# 38-814010-01
- ❑ Protective Clothing Kit — part# 598900-095 *(for opening of lamp door)*
- ❑ *10-Bit KoRE Librarian* Setup Software
- ❑ "Lite" IR Remote Keypad
- ❑ Remote IR Sensor
- ❑ Optional Input Modules — see Appendix F

Appendix A

Glossary

This appendix defines the specific terms used in this manual as they apply to this projector. Also included are other general terms commonly used in the projection industry as well as in the digital cinema projection industry.

3:2 Pulldown ' A frame sequence used to map 24 fps film to 30 fps video (or 24/1.001 to 30/1.001 fps) in which every second film frame is represented by three video fields instead of two, the third being a repeat of the second. This leads to a set of ten video fields for each four film frames.

Active Line Time ' The time—inside one horizontal scan line—during which video data is present.

Alternative Content ' Non-cinema program material such as concerts, plays, sporting events, and potentially corporate training or conferencing, presented in theatres in addition to motion picture exhibition.

Ambient Light Rejection ' The ability of a screen to reflect ambient light (i.e., light within a room from a source other than the projector) in a direction away from the "line of best viewing". Curved screens usually have better ambient light reflection than do flat screens.

Anamorphic ' Having or requiring a linear distortion, generally in the horizontal direction. Anamorphic lenses can restore a ‘scope’ (CinemaScope) or ‘flat’ format film frame to the correct wide-screen appearance by increasing its horizontal proportion. The *Roadie 25K* uses a 1.25x scope anamorphic lens option only.

ANSI ' The American National Standards Institute is the organization that denotes the measurement standard for lamp brightness.

Answer Print ' A print made from the cut original (camera) negative with proposed final color timing and soundtracks, furnished by the printing lab to the producer for acceptance of image and sound before screenings and manufacturing begin. A check print is similar, but is made from the *internegative*. A blacktrack answer print has no soundtracks.

Aspect Ratio ' The ratio of the width of an image to its height, such as the 4:3 aspect ratio common in video output. Also expressed as decimal number, such as 1.77, 1.85 or 2.39. The larger the ratio or decimal, the wider and “less square” the image.

Authoring ' The process, tools, and working environment by which content elements and functions are compiled, formatted, coordinated, and tested for presentation on target systems. *Comment*: Authoring in the context of digital cinema does not necessarily result in inseparably married or muxed content components. Rather, reference is made to a virtual answer print, the elements of which may subsequently be subdivided or combined, encrypted in whole or part, and packaged in various ways

for distribution of the title, a version of the title, or an update for revision of the title in the field.

Automation ' A system used in a theatre projection booth that responds to cues, commands or relay switches and then controls various elements of presentation, such as:

- picture format and corresponding lens (flat or scope)
- sound format and corresponding cinema processor settings
- curtain movement and position
- lighting level in the auditorium
- non-sync play and fade in/out
- digital cinema projector

Auto Source ' The ability of a projector to automatically recognize and lock synchronizing with the horizontal and vertical scan frequencies of an input signal for proper display.

Bandwidth ' The frequency range of a video amplifier.

Baud Rate ' The speed (bits-per-second) at which serial communications travel from their origin.

Bit Depth ' The total number of bits available to represent each pixel or color sample in a digital imaging system. Using linear binary coding, the total number of resolution steps available is equal to 2 raised to the power of the bit depth.

Blanking Time ' The time inside one scan line during which video is not generated. The blanking time of the input signal must be equal to or greater than the retrace time of the projector.

Brightness ' In cinema projection, brightness usually describes the amount of light emitted from a surface such as a screen. It is measured in footlamberts or candelas per square meter. For other types of projection, brightness is measured and expressed in lumens.

Candela or Candle ' Unit of measure for measuring intensity of light in certain types of projectors.

Channel ' A collection of measurements stored by the projector for a given input source, including frequencies, pulse width, polarity, syncs, channel number and location, user-adjustable display settings, etc. Use channels to switch between a variety of setups quickly, automatically recalling previously defined display parameters.

Channel List ' A list/menu of previously-defined channels (setups) available in projector memory.

Channel Number ' A number that uniquely identifies a specific channel retained in projector memory. The projector can store up to 50 channels for use with a variety of sources.

Checkbox ' A menu item that indicates whether an option is currently in effect (checked) or not (unchecked).

Chrominance ' The signal representing the color information (hue and saturation) when the image is represented as separate chrominance and *luminance*. Same as “chroma”.

Clean Aperture ' The fraction of a motion picture *frame* image that is intended to be viewed by the audience. The clean aperture is subjectively free of edge artifacts and lies within the screen area framed by curtains in a cinema. Aspect ratio is often referenced to the clean aperture.

Color Gamut ' The range of colors allowed in a specific system, as defined within a triangular area located on the CIE color locus diagram whose corners are the three primaries defined in the system. Also known as color space.

Color Shift ' A change in the tint of a white field across an image.

Color Temperature ' The coloration (reddish, white, bluish, greenish, etc.) of white in an image, measured using the Kelvin (degrees K) temperature scale. Higher temperatures output more light.

Component Video ' See *YCbCr* or *YPbPr*.

Composite Video ' The output of video tape players and some computers, characterized by synchronization, luminance and color signals combined on one output cable.

Contrast (ratio) ' The degree of difference between the lightest and darkest areas of the image.

Convergence ' The alignment of the red, green, and blue light elements of a projected image so that they appear as a single element. In this projector, convergence can be adjusted by Christie service personnel only.

Curved Screen ' A projection screen which is slightly concave for improved screen gain. Curved screens usually have screen gains which are greater than 1 but viewing angles much less than 180°. Curved screens are not recommended for use with this projector.

DCDM ' Digital Cinema Distribution Master. A file or collection of files formatted for exhibition and comprised of all the components of the *title*. A reference size of about 200 GB per title is likely.

DDC ' The Display Data Channel VESA standard enables communication between PCs and monitors, and is based on E-EDID protocol.

DMD™ ' Digital Micromirror Devices™ used in this projector for processed red, green, and blue color data.

DSM ' Digital Source Master. A title's native source files in acquisition format, edited to create the distribution master and for reformatting for NTSC, HDTV, DVD, etc., and potentially archived.

DVI ' The Digital Visual Interface standard signal supplies analog or digital RGB, sync, I^2C, and clock information to the processing electronics in the projection head.

Detail ' The sharpness of a display from a video source.

Diffused Screen ' A type of rear-projection screen which spreads the light striking it. Screen gain is typically less than 1 but audience viewing angles are increased. Rarely used in cinema.

Digital Cinema ' Professional public presentation of theatrical content by electronic means, particularly emphasizing projectors whose image source is digital data. Also known as d-cinema and (rarely) e-cinema.

Digital Interpolation ' Also known as digital scaling. The process of averaging pixel information when scaling (resizing) an image up or down. When reducing the size of an image, adjacent pixels are averaged to create fewer pixels. When increasing the size of an image,

additional pixels are created by averaging together adjacent pixels in the original smaller image.

Dot Clock ' The maximum frequency of the pixel clock. Also known as pixel clock rate.

E-EDID ' The Enhanced Extended Display Identification Data standard, established by VESA, enables properties (such as resolution) of a display device to be detected by the display card in a controlling device such as a PC. The PC, in turn, can then output in a matching format to fill the display. Some sources used with the projector are VESA E-EDID reported.

Foot-candle ' The intensity of visible light per square foot.

Footlambert ' The luminance (brightness) which results from one foot-candle of illumination falling on a perfectly diffuse surface. 1 fL = 3.423 candela per square meter (cd/m^2). Note that SMPTE RP 98 calls for theatre screen luminance of **12** to 22 fL; 16 +/- 2 fL (55 +/- 7 cd/m^2) is the open gate target according to SMPTE 196M. For cinema applications, *xenon lamp* wattage is approximated to achieve this level using 12 W/ft^2 x (screen height squared) or 5 W/ft^2 of total 'scope image area, for matte screens and typical lenses.

Frame Rate ' The frequency at which complete images are generated. For non-interlaced signals, the frame rate is identical to the vertical frequency. For interlaced signals, the frame rate (also known as field rate) is one half of vertical frequency.

Gain or Screen Gain ' The ability of a screen to direct incident light to an audience. A flat matte white wall has a gain of approximately 1. Screens with gain less than 1 attenuate incident light; screens with gain more than 1 direct more incident light to the audience but have a narrow viewing angle. For example: An image reflecting off a 10 gain screen appears 10 times brighter than it would if reflected off a matte white wall. Curved screens usually have larger gain than flat screens.

GPIO ' General Purpose Input Output, used for remote control of a limited number of programmable functions by direct signal or dry-contact connection.

GVG ' Grass Valley Group (formerly part of Tektronix). More specifically, the .gvg file format used for compressed video, audio, and timecode stream transfer in the Profile video server products, proposed for standardization by SMPTE and as a primary component of *MXF*. Initially implemented on *Fibre Channel* using *FTP* with *TCP/IP* but extensible to XTP or other protocols. Previously called GXF: General Exchange Format.

HDCP ' High-bandwidth Digital Content Protection protocol of keys and encryption helps prevent DVI source material from being copied.

HDTV ' High-definition Television (1035, 1080 and 1125 lines interlace, and 720 and 1080 line progressive formats with a 16:9 (i.e. 1.77) aspect ratio.

Horizontal Frequency ' The frequency at which scan lines are generated, which varies amongst sources. Also called horizontal scan rate or line rate.

Horizontal Offset ' The difference between the center of the projected image and the center of the projector lens. For clarity, offset is often expressed as the maximum percentage of the

image that can be projected to one side of the lens center without degrading the image quality.

Hot Spot ' A circular area of a screen where the image appears brighter than elsewhere on the screen. A hot spot appears along the line of sight and "moves" with the line of sight. High gain screens and rear screens designed for slide or traditional movie projection usually have a hot spot.

Input ' A physical connection route for a source signal, described by a 2-digit number representing 1) its switcher/projector location and 2) its slot in the switcher/projector. In this projector, sources connected at a switcher must be selected at the switcher rather than the projector.

Input Signal ' Signal sent from a source device to the projector.

Interface Module ' A device, such as the *Dual SD/HD-SDI Module*, that accepts an input signal for display by the projector.

Interlace ' A method used by video tape players and some computers to double the vertical resolution without increasing the horizontal line rate. If the resulting frame/field rate is too low, the image may flicker depending on the image content.

Keystone ' A distortion of the image which occurs when the top and bottom borders of the image are unequal in length. Side borders both incline in or out, producing a “keyhole” shaped image. It is caused when the lens surface is not parallel to the screen.

LampLOC™ ' A Christie software feature where internal samples of light in a projector guide the precise position of the lamp along 3 axes—vertical, horizontal and distance to lens—so that lamp performance and output is maximized. Not available in all models.

Linearity ' The reproduction of the horizontal and vertical size of characters and/or shapes over the entire screen.

Line of Best Viewing ' When light from a projector is incident on a screen, the light reflects from the screen such that the angle of reflection equals the angle of incidence. The Line of Best Viewing is along the line of reflection.

LiteLOC™ ' A Christie software feature where samples of output light from a projector trigger automatic adjustments in the lamp ballast power in order to maintain a constant light output over time. Also known as brightness tracking. Not available in all models.

Loopthrough (Loopthru) ' The method of feeding a series of high impedance inputs from a single video source with a coaxial transmission line in such a manner that the line is terminated with its characteristic impedance at the last input on the line.

Lumen ' The unit of measure for the amount of visible light emitted by a light source. Rarely used in cinema applications, but common in most other projection applications.

Luminance ' The signal representing the measurable intensity (comparable to brightness) of an electronic image when the image is represented as separate *chrominance* and *luminance*. Luminance also expresses the light intensity of a diffuse source as a function of its area; measured in lumens or candles per square foot (1 lumen per square foot = 1 *footlambert*). SMPTE RP 98 calls for a luminance of 12 to 22 footlamberts for theatre screens. See: *Footlambert*.

Lux ' The amount of visible light per square meter incident on a surface.
1 lux = 1 lumen/square meter = 0.093 foot-candles

Metadata ' Descriptive data about the format of the content—i.e., “data about data”. Upon receiving metadata, digital cinema projectors will "know" the correct aspect ratio of the image, and the sound processor will "know" the correct format of the audio, all without effort on the part of the person setting up the show on a particular projector.

NTSC Video ' A 525-line resolution video output format of some video tape and disc players. There are two types of NTSC (National Television Standards Committee) video: NTSC 3.58 and NTSC 4.43. NTSC 3.58 is used primarily in North America and Japan. NTSC 4.43 is less commonly used.

Non-cinema ' Alternative program material such as concerts, plays, sporting events, and potentially corporate training or conferencing, presented in theatres in addition to motion picture exhibition.

Non-Sync ' Audio played in a theatre, generally from a CD, when the cinematic presentation is not running, such as during intermissions and prior to the start of film presentation.

Non-unicode ' The non-unicode method of encoding produces a concise character set of 256 alpha-numeric characters typically used in for ASCII messaging in most Western languages. Virtually all projector functions can be executed remotely via non-unicode (default) or unicode messaging—this is auto-detected. See also *unicode*.

Optical Screen ' A type of rear-projection screen which re-directs light through the screen to increase image brightness in front of the screen. Screen gain is usually greater than 1 but audience viewing angles are reduced. Rarely used in cinema applications.

PAL Video ' PAL (Phase Alternating Line) video is a 50 Hz standard with 768 x 576 resolution. It is found on some video tape and disc players used primarily in Europe, China and some South American and African countries.

PCF ' Projector Configuration File, or Presentation Control File. A small file created by the content owner or installer that controls the presentation of the elements and data subdivisions constituting a single version of a title. The human readable component may identify the name of the title, its owner, its length, event points, and other attributes. The PCF specifies color space, target color gamut, gamma (a.k.a. “degamma”), aspect ratio and image position settings. It does not include screen masking (cropping) information. A d-cinema presentation or feature uses a PCF.

Pixel (picture element) ' The smallest discernible element of data in a digital image.

Pixel Phase ' The phase of the pixel sampling clock relative to incoming data.

Pixel Tracking ' The frequency of the pixel sampling clock, indicated by the number of pixels per line.

Play List ' A small file or script typically created by the exhibitor or installer that specifies the sequence of presentation of programs, including features and trailers.

Playout ' The equipment in a digital cinema theatre which delivers previously recorded signals in real time to the *playback* system. The playout may also receive, store, and process these signals prior to delivering them.

Post Production ' The phase in film-making that occurs primarily after production ends; its processes include picture editing, sound effects editing and mixing, ADR, Foley, titles and opticals, dubbing and print mastering, CGI and visual effects, and scoring. Post production culminates in acceptance of the original negative *answer print*. Even though post production officially begins on the last day of principal photography, post production facilities such as editing are utilized from very early in the production phase in order to save time.

Projector-to-Screen Distance ' The distance between the projector's front feet centers and the screen. More commonly known as "Throw Distance".

Pull Up (Pull Down) ' Shifting the frequency, sample rate, or frame rate to as to achieve a target frequency or time relationship with another signal, most commonly by +/- .1%–the ratio of NTSC to B&W TV frame rates. See: *3:2 pulldown*.

Pull-down List ' A selectable menu item that unfolds into a list of options or choices.

QuVis ' A manufacturer of a digital video recorder/player/server, QuBit, frequently used for providing digital cinema data. QuVis image compression uses a proprietary technology called Quality Priority Encoding, based on *wavelets*, in which the user selects a quality level based on *signal-to-noise ratio*. The data rate varies to efficiently maintain that quality level. Frames are coded individually.

Rear Screen ' A translucent panel for screen projection. Incident light travels through the incident surface of a rear screen and forms an image on the other surface. Rarely used for cinema applications.

Release Print ' Composite positive motion picture prints, generally made from *internegative*s, intended for distribution to exhibitors.

Resizing ' The ability to manipulate the physical size, placement and/or aspect ratio of an image. Also called scaling.

Resolution ' The maximum number of pixels that the projector can display horizontally and vertically across an image, such as 1400 x 1050 (SXGA+) or 2048 x 1080.

Retrace Time (Horizontal) ' The minimum time required for a CRT projector to move the position of the scanning spot from the right edge to the left edge.

RGB Video ' The video output (analog or digital) of most computers. Analog RGB video can have 3, 4, or 5 wires — one each for red, green, and blue, and either none, one or two for sync. For three-wire RGB, the green wire usually provides sync. (See TTL Video).

RS232 ' A common asynchronous data transmission standard recommended by the Electronics Industries Association (EIA). A type of serial communication.

RS422 ' A less common asynchronous data transmission standard in which balanced differential voltage is specified. RS422 serial communication is especially suited to long distances.

S-Video ' The output from certain video tape players and video equipment. S-Video separates sync and luminance from color information, typically producing a higher quality display than composite video. Also known as Y/C.

Scan Frequency ' The horizontal or vertical frequency at which images are generated. Also known as scan rate or refresh rate.

Scan Line ' One horizontal line on the display.

SECAM ' A video output format of some video tape and disc players used primarily in France. SECAM (Sequential Couleur á Mémoire) signals are similar in resolution and frequency to PAL signals. The primary difference between the two standards is in the way color information is encoded.

Show Script ' A small file consisting of *automation cues* in addition to a play list, triggering theatre events (action data), and possibly including parameters that allow the program to be tailored for a specific venue or engagement. A show script is created by the exhibitor or installer and provides automated presentations. *Automation available 2005*.

Source ' The device (such as a server) connected to the projector for supplying incoming data.

Source Setup ' See *Channel*.

Switcher ' A signal selector such as the *Marquee Signal Switcher* formerly manufactured by Christie that can be connected for adding more sources to a projector.

Sync ' The part of the video signal that stabilizes the picture. Sync can occur in three forms:

1) "Composite sync": the horizontal and vertical components are together on one cable.
2) "Sync-on-green": the sync is part of the green video.
3) "Separate sync" or "H.SYNC and V.SYNC": the horizontal and vertical components of the sync are on two separate cables.

Sync Width ' The duration of each sync pulse generated by a computer. The sync width is part of the blanking time.

TTL Video ' A type of RGB video with digital characteristics.

Terminated ' A wire connecting a single video source to a display device, such as a projector, must be terminated by a resistance (usually 75S for video).

Throw Distance ' The distance between the front bezel of the projector and the screen. Also called "Projector-to-Screen Distance". Always use the correct Christie throw distance formula to calculate the proper throw distance (±5%) required for your lens.

Throw Ratio ' Throw ratio = throw distance / screen width. Typically used to differentiate lenses.

Tint ' Balance of red-to-green necessary for realistic representation of NTSC signals.

TMDS ' Transition Minimized Differential Signaling is the basis for DVI (Digital Visual Interface).

Unicode ' The Unicode method of encoding produces a very large character set typically required for ASCII messaging in non-Western languages such as Chinese, Russian, etc. In unicode, every number (code) is unique to a single character. Menu functions can be executed remotely via unicode or non-unicode (default) messaging—this is auto-detected. See also *non-unicode*.

Variable Scan ' The ability of a projector to synchronize to inputs with frequencies within a specified range.

Vertical Frequency ' The frequency at which images are generated or “output”. Vertical frequencies vary amongst sources. Also known as vertical scan rate.

Vertical Offset ' The difference between the center of the projected image and the center of the projector lens. For clarity, offset is often expressed as the maximum percentage of the image that can be projected above or below the lens center without degrading the image quality.

VESA ' The Video Electronic Standards Association establishes standards of communication between electronic components to help ensure universal compatibility.

Video ' The signal that is used by display devices (such as projectors) to generate an image. This term also refers to the output of video tape/disk players and computers.

Video Decoder ' A module that converts NTSC 3.58, NTSC 4.4, PAL, PAL-N, PAL-M or SECAM to RGB video. An 8-bit video decoder is standard in this projector.

Video Standard ' A specific type of video signal, such as NTSC, PAL, SECAM.

Viewing Angle ' Screens do not reflect equally in all directions. Instead, most light is reflected in a conical volume centered around the "line of best viewing". Maximum brightness is perceived if you are within the viewing cone defined by the horizontal and vertical viewing angles.

Watermark ' Data embedded in essence that serve different purposes and that are either imperceptible or obvious, robust or fragile. Their usual purpose is for legal support of copyright, and they may also be components of copy control schemes.

White Balance ' The color temperature of white used by the projector.

White Field ' The area of an image that is white only. For example, a full white field is an image that is white everywhere. A 10% white field is a white area (usually rectangular) that occupies 10% of the image; the remaining 90% is black.

YCbCr ' A high-end *digital* component video signal.

YPbPr ' A high-end *analog* component video signal. Sometimes called YUV, Component, or Y, R-Y, B-Y, the YPbPr signal by-passes video decoding.

YUV ' See *YPbPr*.

Zoom ' The adjustment of image size by means of a zoom lens.

Appendix B

Remote Keypad

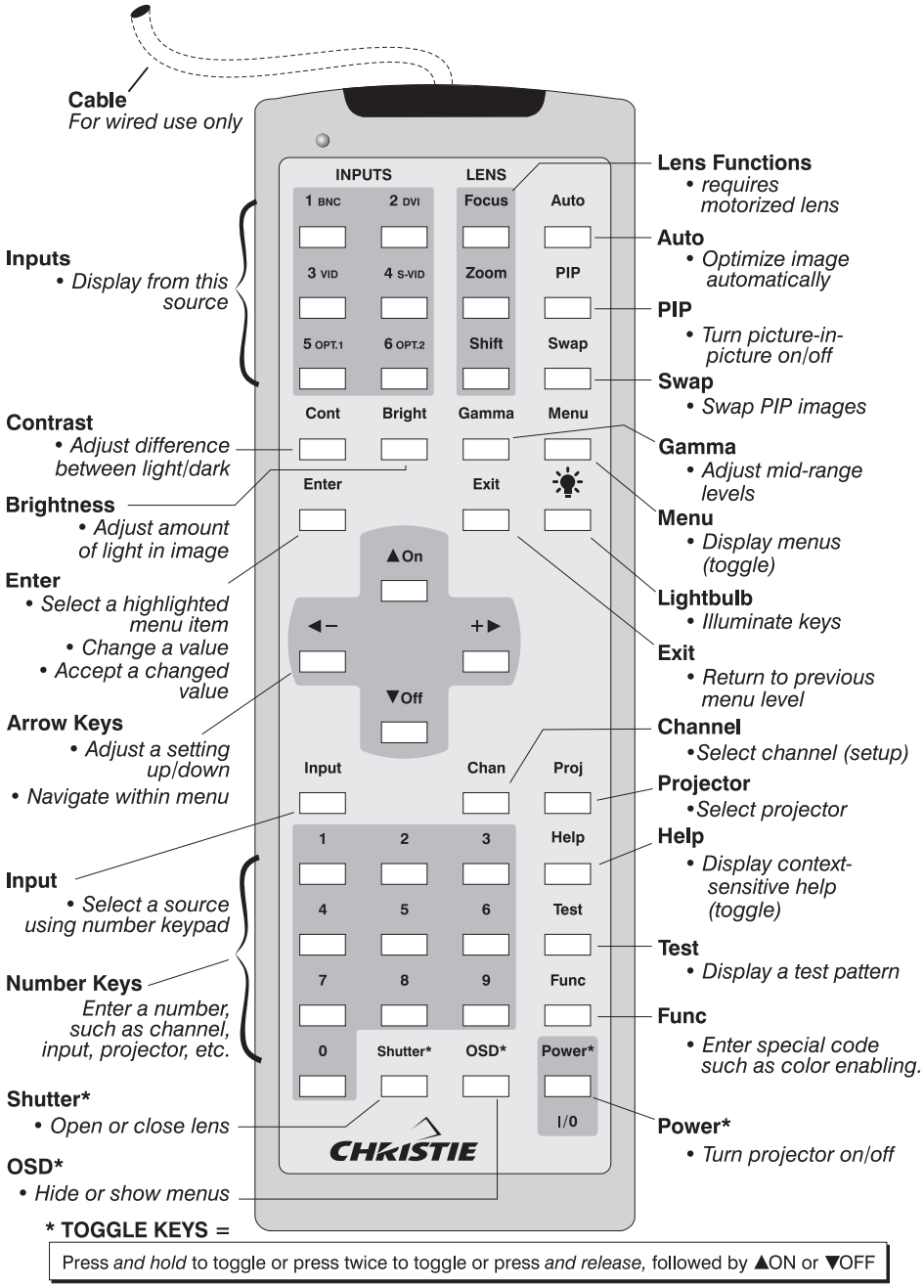

Figure B.1. Standard Remote Keypad

Appendix C

Serial Communication Cables

Serial Links to Projector

FOR GENERAL COMMUNICATIONS: A serial link of RS232 or RS422 enables ASCII communication with the projector so that it can be controlled remotely from a PC or other controller. From a PC, connect a standard 9-wire RS232 serial cable to the **RS232 IN** port located on the side of the projection head. Or, for long-distance (>100 ft.) links with an RS422-compatible PC or controller, connect RS422 cable to an **RS422** port located on the side or rear panel of the projection head.

FOR SOFTWARE DOWNLOADS: Downloading new software to the projector requires RS232 or RS422 connected to the 9-pin connectors on the side of the projector only—do not download using either of the 6-pin XLR RS422 ports located at the rear of the projector.

⚠ NOTE ⚠

Using a rear RS422 port (3-pin XLR) or Ethernet link for downloading new software to the projector is *not* supported.

RS422 CONNECTIONS: Depending on your RS422-compatible device or RS232-RS444 converter, the cabling wiring can vary, and may require a custom cable.

❑ *From projector to computer (RS232)*

For computers having a 9-pin "AT" type serial port

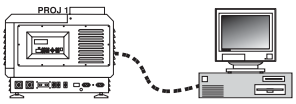

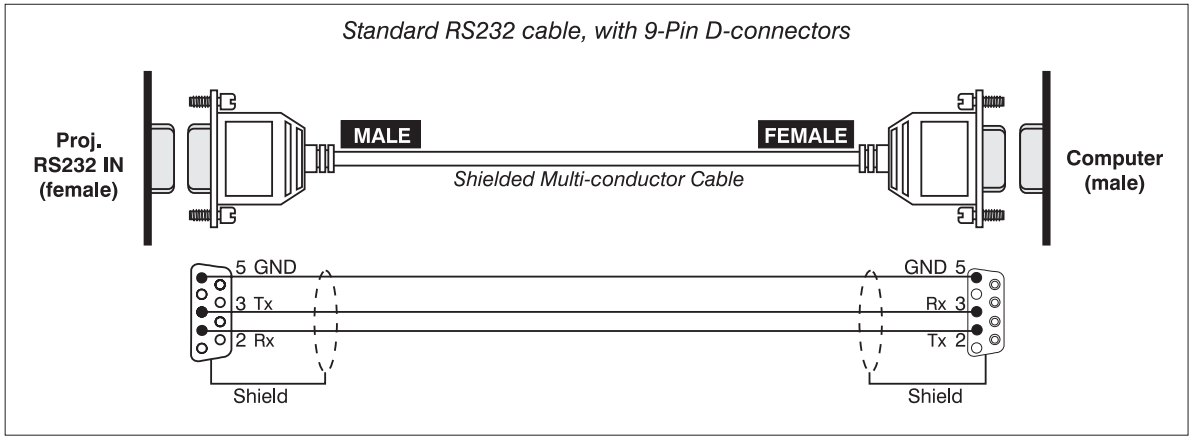

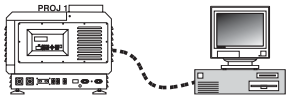

❑ *From projector (side) to RS422 compatible computer*

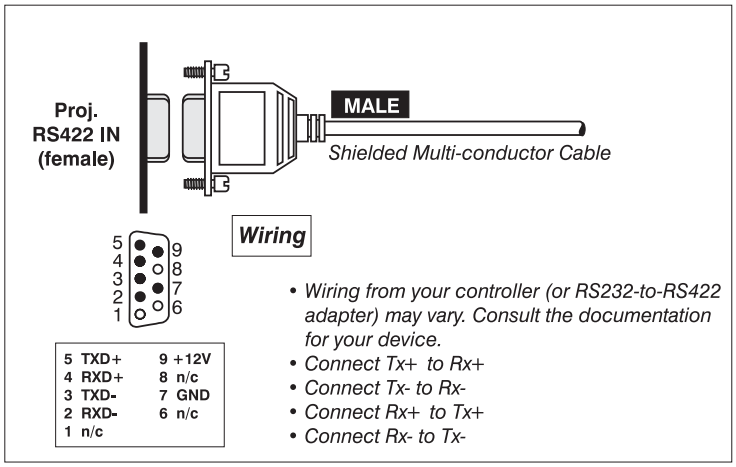

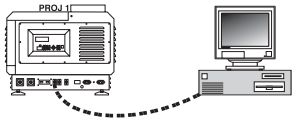

❑ *From projector (rear) to RS422 compatible computer*

IMPORTANT
Not for software downloads.

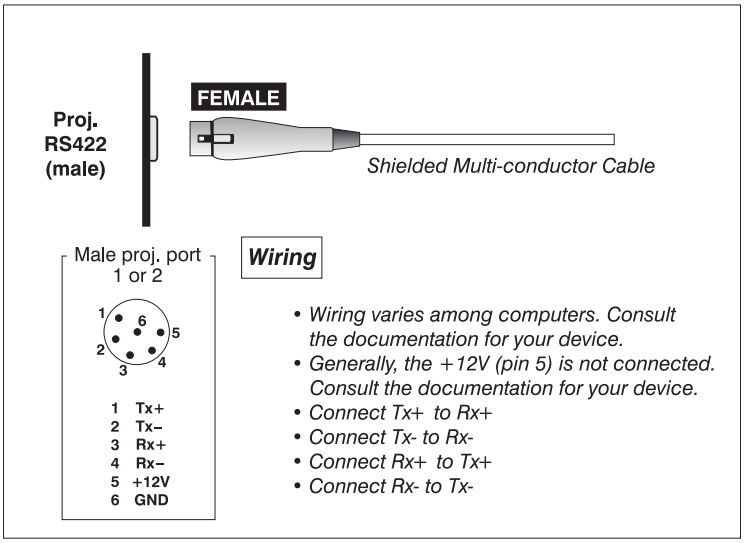

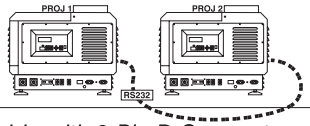

❑ *From projector to projector via RS232*

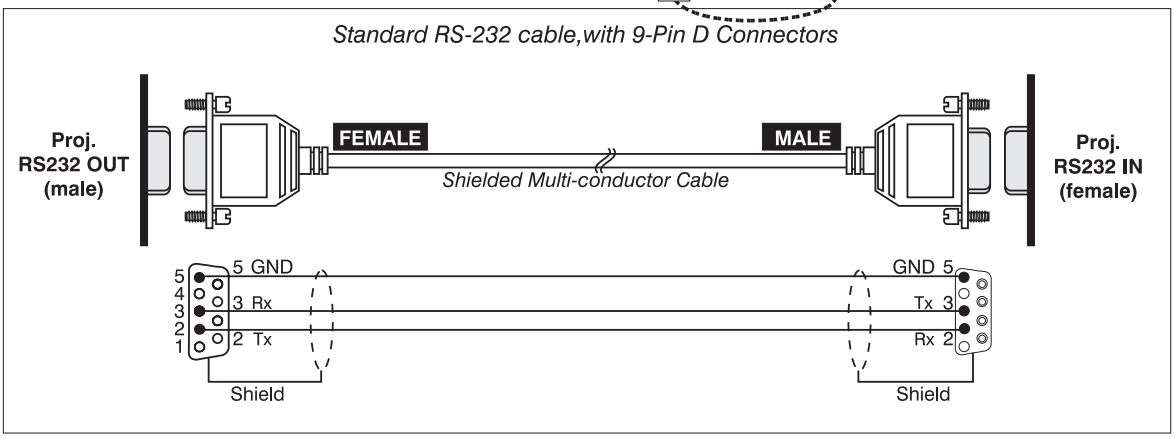

❑ ***From projector to projector via RS422***

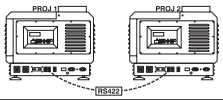

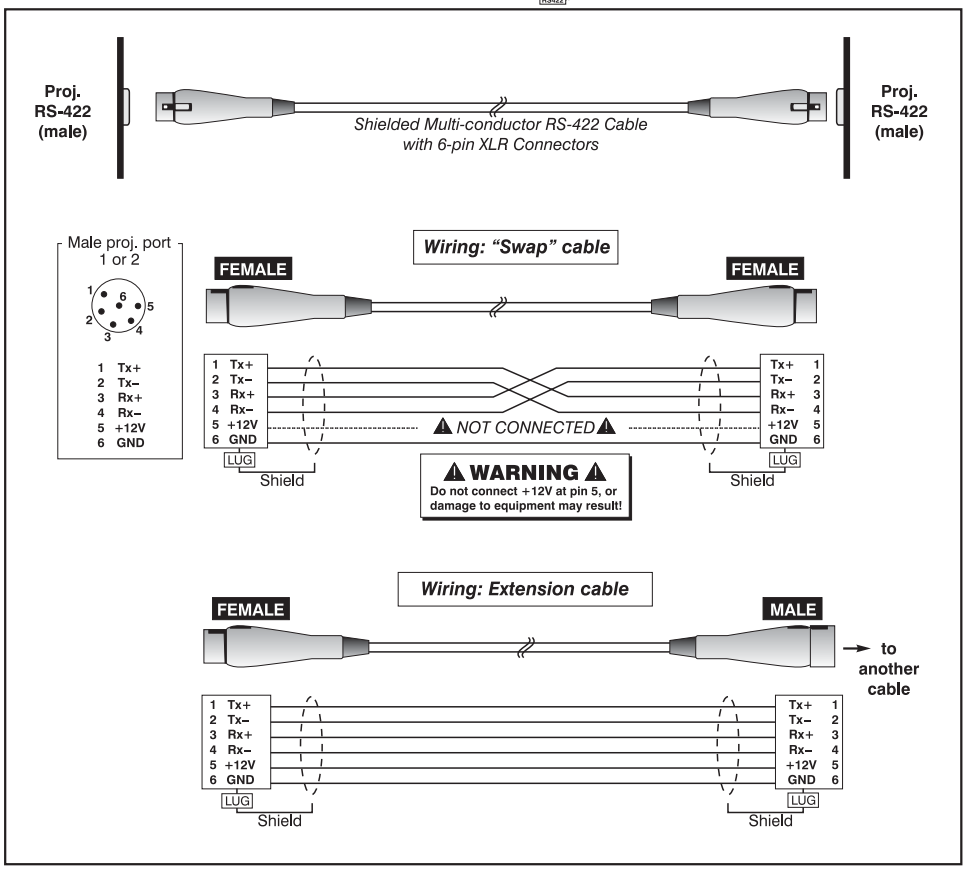

Appendix D

Throw Distance

Introduction

When planning a projector installation, consult this Appendix and/or use the Lens Calculator available at the website. See also *2.3, Projector Position and Mounting*.

Calculating Throw Distance

In this projector, throw distance is measured from the screen to the non-recessed portion of the projector's front bezel. Determining an ideal throw distance depends on the screen size and lens present at your site—the larger the image needed, the greater the throw distance required. Once you know the screen size and lens type present, you can calculate the required throw distance by using the appropriate formula provided on page D-2, or by looking it up in the Table for this lens.

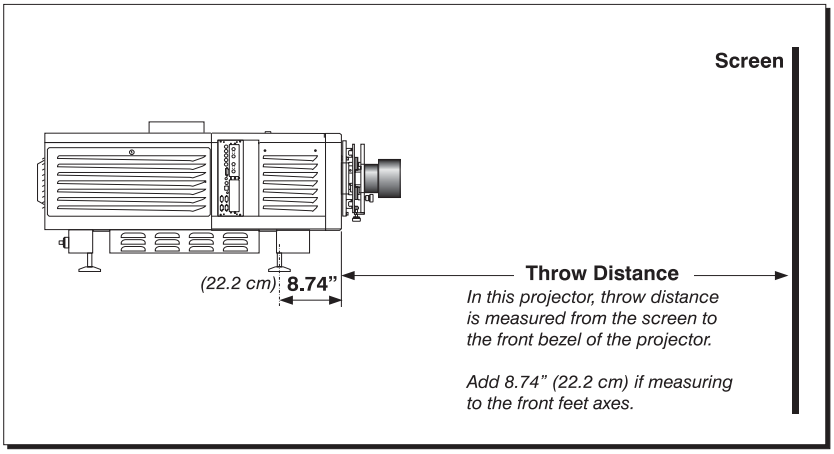

This measurement (see above) is not necessarily parallel to the floor—i.e., the projector and screen may be inclined.

*NOTES:**1)** If your projector is tilted up or down in relation to the screen, typical in large venues and/or elevated installation, throw distance still represents the smallest measurement between the screen and front bezel. **2)** Remember that throw distances provided in this Appendix are calculated from the screen to the **front bezel** of the projector rather than its foot centers. To figure throw distance from foot centers, add 8.74" (22.2 cm).*

Throw Distance Formulas

Table D.1 provides the throw distance formula for each lens. Once you know what size screen you wish to fill, use the formula for the corresponding lens to calculate the recommended throw distance. All formulas are in centimeters (cm).

NOTE: Minimum throw distance is 15 feet for all lenses except as noted.

Table D.1. Throw Distance Formulas

Lens Throw Ratio	*Throw Distance Formula (cm) ±5%*	*Min. Throw Distance*	*Approx. Max.Screen Width (↔)*
1:1 fixed	1.03 x screen width (↔ cm) + 28.3	5m (15 ft.)	44m (145 ft.)
1.25 – 1.45:1 zoom	Min:1.26 x screen width (↔ cm) + 25.9 Max: 1.46 x screen width (↔ cm) + 23.5	5m (15 ft.)	44m (145 ft.)
1.45 – 1.8:1 zoom	Min: 1.45 x screen width (↔ cm) + 18.4 Max: 1.81 x screen width (↔ cm) + 16.8	5m (15 ft.)	44m (145 ft.)
1.8 – 2.4:1 zoom	Min: 1.80 x screen width (↔ cm) + 17.9 Max: 2.41 x screen width (↔ cm) + 15.1	5m (15 ft.)	44m (145 ft.)
2.2 – 3.0:1 zoom	Min: 2.24 x screen width (↔ cm) + 9.6 Max: 3.05 x screen width (↔ cm) + 4.0	5m (15 ft.)	44m (145 ft.)
3.0 – 4.3:1 zoom	Min: 3.05 x screen width (↔ cm) + 2.5 Max: 4.35 x screen width (↔ cm) + .04	5m (15 ft.)	44m (145 ft.)
4.3 – 6.0:1 zoom	Min: 4.37 x screen width (↔ cm) + 7.3 Max: 6.16 x screen width (↔ cm) + 3.0	9m (30 ft.)	44m (145 ft.)
5.5 – 8.5:1 zoom	Min: 5.59 x screen width (↔ cm) + 10.1 Max: 8.71 x screen width (↔ cm) + 1.2	9m (30 ft.)	44m (145 ft.)

NOTES: 1) Make sure to use HORIZONTAL screen width in all formulas. 2) Throw distance can often be exceeded with negligible loss of focus. 3) Throw ratios, formulas and throw distances apply to both standard and optional high-contrast lenses.

Throw Distance Tables

Based on the formulas provided in Table D.1, a selection of pre-calculated throw distances for each lens type appears in the charts on the following pages. Refer to these examples to quickly determine a proper throw distance (±5%) for your installation and lens, or to determine what zoom range of image size is possible at a given throw distance.

Keep in mind that ambient light, screen material, lamp size, image content and other variables at your site may affect whether or not a given throw distance—and resulting image size—will be ideal for your installation.

NOTE: Throw ratios, formulas and throw distances apply to both standard and optional high-contrast lenses.

1:1 Fixed Lens			
Screen Width ↔ (cm)	Throw Distance (cm)	Screen Width ↔ (in)	Throw Distance (in)
420	460.9	165.4	165.5
505	548.5	198.8	215.9
605	651.5	238.2	256.5
705	754.5	277.6	297.0
805	857.5	316.9	337.6
905	960.5	356.3	378.1
1005	1063.5	395.7	418.7
1105	1166.5	435.0	459.2
1205	1269.5	474.4	499.8
1305	1372.5	513.8	540.3
1405	1475.5	553.1	580.9
1505	1578.5	592.5	621.4
1605	1681.5	631.9	662.0
1705	1784.5	671.3	702.5
1805	1887.5	710.6	743.1
1905	1990.5	750.0	783.6
2005	2093.5	789.4	824.2
2105	2196.5	828.7	864.7
2205	2299.5	868.1	905.3
2305	2402.5	907.5	945.8
2405	2505.5	946.9	986.4
2505	2608.5	986.2	1026.9
2605	2711.5	1025.6	1067.5
2705	2814.5	1065.0	1108.1
2805	2917.5	1104.3	1148.6
2905	3020.5	1143.7	1189.2
3005	3123.5	1183.1	1229.7
3105	3226.5	1222.4	1270.3
3205	3329.5	1261.8	1310.8
3305	3432.5	1301.2	1351.4
3405	3535.5	1340.6	1391.9
3505	3638.5	1379.9	1432.5
3605	3741.5	1419.3	1473.0
3705	3844.5	1458.7	1513.6
3805	3947.5	1498.0	1554.1
3905	4050.5	1537.4	1594.7
4005	4153.5	1576.8	1635.2
4105	4256.5	1616.1	1675.8
4205	4359.5	1655.5	1716.3
4305	4462.5	1694.9	1756.9
4405	4565.5	1734.3	1797.4

1.25-1.45:1 Zoom Lens					
Throw Distance (cm)	Max. Screen Width ↔ (cm)	Min. Screen Width ↔ (cm)	Throw Distance (in)	Max. Screen Width ↔ (in)	Min. Screen Width ↔ (in)
467	351.1	303.0	183.9	138.2	119.3
567	430.7	371.3	223.2	169.6	146.2
667	510.3	439.6	262.6	200.9	173.1
767	589.9	508.0	302.0	232.3	200.0
867	669.5	576.3	341.3	263.6	226.9
967	749.1	644.6	380.7	294.9	253.8
1067	828.7	712.9	420.1	326.3	280.7
1167	908.3	781.2	459.4	357.6	307.6
1267	987.9	849.6	498.8	389.0	334.5
1367	1067.5	917.9	538.2	420.3	361.4
1467	1147.1	986.2	577.6	451.6	388.3
1567	1226.7	1054.5	616.9	483.0	415.2
1667	1306.3	1122.8	656.3	514.3	442.1
1767	1385.9	1191.2	695.7	545.6	469.0
1867	1465.5	1259.5	735.0	577.0	495.9
1967	1545.1	1327.8	774.4	608.3	522.8
2067	1624.7	1396.1	813.8	639.7	549.7
2167	1704.3	1464.4	853.1	671.0	576.6
2267	1783.9	1532.8	892.5	702.3	603.5
2367	1863.5	1601.1	931.9	733.7	630.3
2467	1943.1	1669.4	971.3	765.0	657.2
2567	2022.7	1737.7	1010.6	796.3	684.1
2667	2102.3	1806.0	1050.0	827.7	711.0
2767	2181.9	1874.4	1089.4	859.0	737.9
2867	2261.5	1942.7	1128.7	890.4	764.8
2967	2341.1	2011.0	1168.1	921.7	791.7
3067	2420.7	2079.3	1207.5	953.0	818.6
3167	2500.3	2147.6	1246.9	984.4	845.5
3267	2579.9	2216.0	1286.2	1015.7	872.4
3367	2659.5	2284.3	1325.6	1047.1	899.3
3467	2739.1	2352.6	1365.0	1078.4	926.2
3567	2818.7	2420.9	1404.3	1109.7	953.1
3667	2898.3	2489.2	1443.7	1141.1	980.0
3767	2977.9	2557.6	1483.1	1172.4	1006.9
3867	3057.5	2625.9	1522.4	1203.7	1033.8
3967	3137.1	2694.2	1561.8	1235.1	1060.7
4067	3216.7	2762.5	1601.2	1266.4	1087.6
4167	3296.3	2830.8	1640.6	1297.8	1114.5
4267	3375.9	2899.2	1679.9	1329.1	1141.4
4367	3455.5	2967.5	1719.3	1360.4	1168.3
4467	3535.1	3035.8	1758.7	1391.8	1195.2
4567	3614.7	3104.1	1798.0	1423.1	1222.1

1.45-1.8:1 Zoom Lens					
Throw Distance (cm)	Max. Screen Width ↔ (cm)	Min. Screen Width ↔ (cm)	Throw Distance (in)	Max. Screen Width ↔ (in)	Min. Screen Width ↔ (in)
467	309.6	248.8	183.9	121.9	98.0
567	378.6	304.1	223.2	149.0	119.7
667	447.6	359.4	262.6	176.2	141.5
767	516.6	414.7	302.0	203.4	163.3
867	585.6	470.0	341.3	230.5	185.0
967	654.6	525.2	380.7	257.7	206.8
1067	723.6	580.5	420.1	284.9	228.5
1167	792.6	635.8	459.4	312.0	250.3
1267	861.6	691.1	498.8	339.2	272.1
1367	930.6	746.4	538.2	366.4	293.8
1467	999.6	801.6	577.6	393.5	315.6
1567	1068.6	856.9	616.9	420.7	337.4
1667	1137.6	912.2	656.3	447.9	359.1
1767	1206.6	967.5	695.7	475.0	380.9
1867	1275.6	1022.7	735.0	502.2	402.7
1967	1344.6	1078.0	774.4	529.4	424.4
2067	1413.6	1133.3	813.8	556.5	446.2
2167	1482.6	1188.6	853.1	583.7	467.9
2267	1551.6	1243.9	892.5	610.9	489.7
2367	1620.6	1299.1	931.9	638.0	511.5
2467	1689.6	1354.4	971.3	665.2	533.2
2567	1758.6	1409.7	1010.6	692.4	555.0
2667	1827.6	1465.0	1050.0	719.5	576.8
2767	1896.6	1520.3	1089.4	746.7	598.5
2867	1965.6	1575.5	1128.7	773.9	620.3
2967	2034.7	1630.8	1168.1	801.0	642.1
3067	2103.7	1686.1	1207.5	828.2	663.8
3167	2172.7	1741.4	1246.9	855.4	685.6
3267	2241.7	1796.7	1286.2	882.5	707.3
3367	2310.7	1851.9	1325.6	909.7	729.1
3467	2379.7	1907.2	1365.0	936.9	750.9
3567	2448.7	1962.5	1404.3	964.0	772.6
3667	2517.7	2017.8	1443.7	991.2	794.4
3767	2586.7	2073.1	1483.1	1018.4	816.2
3867	2655.7	2128.3	1522.4	1045.5	837.9
3967	2724.7	2183.6	1561.8	1072.7	859.7
4067	2793.7	2238.9	1601.2	1099.9	881.5
4167	2862.7	2294.2	1640.6	1127.0	903.2
4267	2931.7	2349.4	1679.9	1154.2	925.0
4367	3000.7	2404.7	1719.3	1181.4	946.7
4467	3069.7	2460.0	1758.7	1208.5	968.5
4567	3138.7	2515.3	1798.0	1235.7	990.3

1.8-2.4:1 Zoom Lens					
Throw Distance (cm)	Max. Screen Width ↔ (cm)	Min. Screen Width ↔ (cm)	Throw Distance (in)	Max. Screen Width ↔ (in)	Min. Screen Width ↔ (in)
467	249.7	187.4	183.9	98.3	73.8
567	305.3	228.9	223.2	120.2	90.1
667	360.9	270.4	262.6	142.1	106.4
767	416.5	311.9	302.0	164.0	122.8
867	472.1	353.3	341.3	185.9	139.1
967	527.7	394.8	380.7	207.8	155.4
1067	583.3	436.3	420.1	229.7	171.8
1167	638.9	477.8	459.4	251.6	188.1
1267	694.6	519.2	498.8	273.4	204.4
1367	750.2	560.7	538.2	295.3	220.8
1467	805.8	602.2	577.6	317.2	237.1
1567	861.4	643.7	616.9	339.1	253.4
1667	917.0	685.1	656.3	361.0	269.7
1767	972.6	726.6	695.7	382.9	286.1
1867	1028.2	768.1	735.0	404.8	302.4
1967	1083.8	809.6	774.4	426.7	318.7
2067	1139.4	851.0	813.8	448.6	335.1
2167	1195.0	892.5	853.1	470.5	351.4
2267	1250.6	934.0	892.5	492.4	367.7
2367	1306.2	975.5	931.9	514.3	384.0
2467	1361.8	1017.0	971.3	536.1	400.4
2567	1417.4	1058.4	1010.6	558.0	416.7
2667	1473.0	1099.9	1050.0	579.9	433.0
2767	1528.6	1141.4	1089.4	601.8	449.4
2867	1584.2	1182.9	1128.7	623.7	465.7
2967	1639.8	1224.3	1168.1	645.6	482.0
3067	1695.4	1265.8	1207.5	667.5	498.4
3167	1751.0	1307.3	1246.9	689.4	514.7
3267	1806.7	1348.8	1286.2	711.3	531.0
3367	1862.3	1390.2	1325.6	733.2	547.3
3467	1917.9	1431.7	1365.0	755.1	563.7
3567	1973.5	1473.2	1404.3	777.0	580.0
3667	2029.1	1514.7	1443.7	798.8	596.3
3767	2084.7	1556.1	1483.1	820.7	612.7
3867	2140.3	1597.6	1522.4	842.6	629.0
3967	2195.9	1639.1	1561.8	864.5	645.3
4067	2251.5	1680.6	1601.2	886.4	661.6
4167	2307.1	1722.1	1640.6	908.3	678.0
4267	2362.7	1763.5	1679.9	930.2	694.3
4367	2418.3	1805.0	1719.3	952.1	710.6
4467	2473.9	1846.5	1758.7	974.0	727.0
4567	2529.5	1888.0	1798.0	995.9	743.3

2.3-3.0:1 Zoom Lens					
Throw Distance (cm)	Max. Screen Width ↔ (cm)	Min. Screen Width ↔ (cm)	Throw Distance (in)	Max. Screen Width ↔ (in)	Min. Screen Width ↔ (in)
467	204.1	152.1	183.9	80.4	59.9
567	248.8	184.9	223.2	97.9	72.8
667	293.4	217.7	262.6	115.5	85.7
767	338.0	250.6	302.0	133.1	98.7
867	382.6	283.4	341.3	150.6	111.6
967	427.3	316.3	380.7	168.2	124.5
1067	471.9	349.1	420.1	185.8	137.4
1167	516.5	382.0	459.4	203.4	150.4
1267	561.1	414.8	498.8	220.9	163.3
1367	605.8	447.6	538.2	238.5	176.2
1467	650.4	480.5	577.6	256.1	189.2
1567	695.0	513.3	616.9	273.6	202.1
1667	739.7	546.2	656.3	291.2	215.0
1767	784.3	579.0	695.7	308.8	228.0
1867	828.9	611.8	735.0	326.3	240.9
1967	873.5	644.7	774.4	343.9	253.8
2067	918.2	677.5	813.8	361.5	266.7
2167	962.8	710.4	853.1	379.1	279.7
2267	1007.4	743.2	892.5	396.6	292.6
2367	1052.0	776.0	931.9	414.2	305.5
2467	1096.7	808.9	971.3	431.8	318.5
2567	1141.3	841.7	1010.6	449.3	331.4
2667	1185.9	874.6	1050.0	466.9	344.3
2767	1230.6	907.4	1089.4	484.5	357.2
2867	1275.2	940.2	1128.7	502.0	370.2
2967	1319.8	973.1	1168.1	519.6	383.1
3067	1364.4	1005.9	1207.5	537.2	396.0
3167	1409.1	1038.8	1246.9	554.7	409.0
3267	1453.7	1071.6	1286.2	572.3	421.9
3367	1498.3	1104.4	1325.6	589.9	434.8
3467	1542.9	1137.3	1365.0	607.5	447.8
3567	1587.6	1170.1	1404.3	625.0	460.7
3667	1632.2	1203.0	1443.7	642.6	473.6
3767	1676.8	1235.8	1483.1	660.2	486.5
3867	1721.4	1268.7	1522.4	677.7	499.5
3967	1766.1	1301.5	1561.8	695.3	512.4
4067	1810.7	1334.3	1601.2	712.9	525.3
4167	1855.3	1367.2	1640.6	730.4	538.3
4267	1900.0	1400.0	1679.9	748.0	551.2
4367	1944.6	1432.9	1719.3	765.6	564.1
4467	1989.2	1465.7	1758.7	783.2	577.0
4567	2033.8	1498.5	1798.0	800.7	590.0

3.0-4.3:1 Zoom Lens					
Throw Distance (cm)	Max. Screen Width ↔ (cm)	Min. Screen Width ↔ (cm)	Throw Distance (in)	Max. Screen Width ↔ (in)	Min. Screen Width ↔ (in)
467	152.1	107.4	183.9	59.9	42.3
567	184.9	130.4	223.2	72.8	51.3
667	217.6	153.4	262.6	85.7	60.4
767	250.4	176.3	302.0	98.6	69.4
867	283.1	199.3	341.3	111.5	78.5
967	315.9	222.3	380.7	124.4	87.5
1067	348.6	245.3	420.1	137.2	96.6
1167	381.3	268.3	459.4	150.1	105.6
1267	414.1	291.3	498.8	163.0	114.7
1367	446.8	314.3	538.2	175.9	123.7
1467	479.6	337.3	577.6	188.8	132.8
1567	512.3	360.3	616.9	201.7	141.8
1667	545.1	383.3	656.3	214.6	150.9
1767	577.8	406.2	695.7	227.5	159.9
1867	610.6	429.2	735.0	240.4	169.0
1967	643.3	452.2	774.4	253.3	178.0
2067	676.1	475.2	813.8	266.2	187.1
2167	708.8	498.2	853.1	279.1	196.1
2267	741.6	521.2	892.5	292.0	205.2
2367	774.3	544.2	931.9	304.8	214.2
2467	807.1	567.2	971.3	317.7	223.3
2567	839.8	590.2	1010.6	330.6	232.3
2667	872.6	613.2	1050.0	343.5	241.4
2767	905.3	636.1	1089.4	356.4	250.5
2867	938.0	659.1	1128.7	369.3	259.5
2967	970.8	682.1	1168.1	382.2	268.6
3067	1003.5	705.1	1207.5	395.1	277.6
3167	1036.3	728.1	1246.9	408.0	286.7
3267	1069.0	751.1	1286.2	420.9	295.7
3367	1101.8	774.1	1325.6	433.8	304.8
3467	1134.5	797.1	1365.0	446.7	313.8
3567	1167.3	820.1	1404.3	459.6	322.9
3667	1200.0	843.1	1443.7	472.5	331.9
3767	1232.8	866.0	1483.1	485.3	341.0
3867	1265.5	889.0	1522.4	498.2	350.0
3967	1298.3	912.0	1561.8	511.1	359.1
4067	1331.0	935.0	1601.2	524.0	368.1
4167	1363.8	958.0	1640.6	536.9	377.2
4267	1396.5	981.0	1679.9	549.8	386.2
4367	1429.3	1004.0	1719.3	562.7	395.3
4467	1462.0	1027.0	1758.7	575.6	404.3
4567	1494.7	1050.0	1798.0	588.5	413.4

4.3-6.0:1 Zoom Lens					
Throw Distance (cm)	Max. Screen Width ↔ (cm)	Min. Screen Width ↔ (cm)	Throw Distance (in)	Max. Screen Width ↔ (in)	Min. Screen Width ↔ (in)
460	103.5	75.2	181.1	40.8	29.6
560	126.4	91.5	220.5	49.8	36.0
660	149.3	107.7	259.8	58.8	42.4
760	172.2	124.0	299.2	67.8	48.8
860	195.0	140.2	338.6	76.8	55.2
960	217.9	156.4	378.0	85.8	61.6
1060	240.8	172.7	417.3	94.8	68.0
1160	263.7	188.9	456.7	103.8	74.4
1260	286.5	205.2	496.1	112.8	80.8
1360	309.4	221.4	535.4	121.8	87.2
1460	332.3	237.7	574.8	130.8	93.6
1560	355.1	253.9	614.2	139.8	100.0
1660	378.0	270.2	653.5	148.8	106.4
1760	400.9	286.4	692.9	157.8	112.8
1860	423.8	302.6	732.3	166.8	119.1
1960	446.6	318.9	771.7	175.8	125.5
2060	469.5	335.1	811.0	184.8	131.9
2160	492.4	351.4	850.4	193.8	138.3
2260	515.3	367.6	889.8	202.9	144.7
2360	538.1	383.9	929.1	211.9	151.1
2460	561.0	400.1	968.5	220.9	157.5
2560	583.9	416.3	1007.9	229.9	163.9
2660	606.7	432.6	1047.2	238.9	170.3
2760	629.6	448.8	1086.6	247.9	176.7
2860	652.5	465.1	1126.0	256.9	183.1
2960	675.4	481.3	1165.4	265.9	189.5
3060	698.2	497.6	1204.7	274.9	195.9
3160	721.1	513.8	1244.1	283.9	202.3
3260	744.0	530.1	1283.5	292.9	208.7
3360	766.9	546.3	1322.8	301.9	215.1
3460	789.7	562.5	1362.2	310.9	221.5
3560	812.6	578.8	1401.6	319.9	227.9
3660	835.5	595.0	1440.9	328.9	234.3
3760	858.3	611.3	1480.3	337.9	240.7
3860	881.2	627.5	1519.7	346.9	247.1
3960	904.1	643.8	1559.1	355.9	253.5
4060	927.0	660.0	1598.4	364.9	259.8
4160	949.8	676.3	1637.8	374.0	266.2
4260	972.7	692.5	1677.2	383.0	272.6
4360	995.6	708.7	1716.5	392.0	279.0
4460	1018.5	725.0	1755.9	401.0	285.4
4560	1041.3	741.2	1795.3	410.0	291.8

5.5-8.5:1 Zoom Lens					
Throw Distance (cm)	Max. Screen Width ↔ (cm)	Min. Screen Width ↔ (cm)	Throw Distance (in)	Max. Screen Width ↔ (in)	Min. Screen Width ↔ (in)
467.0	81.8	53.5	183.9	32.2	21.1
567.0	99.7	65.0	223.2	39.2	25.6
667.0	117.6	76.4	262.6	46.3	30.1
767.0	135.5	87.9	302.0	53.3	34.6
867.0	153.3	99.4	341.3	60.4	39.1
967.0	171.2	110.9	380.7	67.4	43.6
1067.0	189.1	122.3	420.1	74.5	48.2
1167.0	207.0	133.8	459.4	81.5	52.7
1267.0	224.9	145.3	498.8	88.6	57.2
1367.0	242.8	156.8	538.2	95.6	61.7
1467.0	260.7	168.3	577.6	102.6	66.2
1567.0	278.6	179.7	616.9	109.7	70.8
1667.0	296.5	191.2	656.3	116.7	75.3
1767.0	314.4	202.7	695.7	123.8	79.8
1867.0	332.3	214.2	735.0	130.8	84.3
1967.0	350.2	225.7	774.4	137.9	88.8
2067.0	368.1	237.1	813.8	144.9	93.4
2167.0	386.0	248.6	853.1	152.0	97.9
2267.0	403.9	260.1	892.5	159.0	102.4
2367.0	421.8	271.6	931.9	166.0	106.9
2467.0	439.7	283.1	971.3	173.1	111.4
2567.0	457.6	294.5	1010.6	180.1	116.0
2667.0	475.4	306.0	1050.0	187.2	120.5
2767.0	493.3	317.5	1089.4	194.2	125.0
2867.0	511.2	329.0	1128.7	201.3	129.5
2967.0	529.1	340.4	1168.1	208.3	134.0
3067.0	547.0	351.9	1207.5	215.4	138.6
3167.0	564.9	363.4	1246.9	222.4	143.1
3267.0	582.8	374.9	1286.2	229.5	147.6
3367.0	600.7	386.4	1325.6	236.5	152.1
3467.0	618.6	397.8	1365.0	243.5	156.6
3567.0	636.5	409.3	1404.3	250.6	161.2
3667.0	654.4	420.8	1443.7	257.6	165.7
3767.0	672.3	432.3	1483.1	264.7	170.2
3867.0	690.2	443.8	1522.4	271.7	174.7
3967.0	708.1	455.2	1561.8	278.8	179.2
4067.0	726.0	466.7	1601.2	285.8	183.7
4167.0	743.9	478.2	1640.6	292.9	188.3
4267.0	761.8	489.7	1679.9	299.9	192.8
4367.0	779.7	501.2	1719.3	307.0	197.3
4467.0	797.5	512.6	1758.7	314.0	201.8
4567.0	815.4	524.1	1798.0	321.0	206.3

Appendix E

System Integration

The GPIO connector located on the side input panel provides a flexible method of interfacing a wide range of external I/O devices to the projector, usually so that an event on one device automatically triggers an event on the other. There are 7 GIO pins available on the 9pin D-Sub GPIO connector, which are configurable via RS232 commands. The other two pins are reserved for ground and power – see table below for pin identification.

GPIO

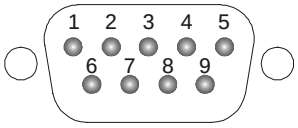

GPIO Pins	
Pin #	**Signal**
1	+ 12V (200mA)
2	GPIO 1
3	GPIO 2
4	GPIO 3
5	Ground
6	GPIO 4
7	GPIO 5
8	GPIO 6
9	GPIO 7

The serial cable required for connecting the external device to the projector's GPIO connector, whether it's a standard serial cable or a custom one, must be compatible with the external device.

Configuring the GPIO

The GPIO connector can be configured to automate any number of events using the serial command code **GIO**. Each pin is defined as either an ***input*** or ***output*** depending on the desired outcome. In general, configure the pin as an input if you want the projector to respond to something an external device does, and as an output if you want the external device to respond to an action taken by the projector. For example, configure the pin as an output if you want the lighting in a room to automatically dim when the projector is turned on.

A **GIO** command can also set the state of each pin as ***high*** or ***low***. By default, the state of each pin is ***high.*** The voltage applied to pins in the *high* state is + 3.3V.

Example 1. Turn room lighting on when the projector is turned off. (Assumes a control/automation unit is configured to turn the lights on when pin 2 of its input goes high.)

(GIO C2 O)	*Set pin #2 configuration to output*
(GIO 2 H)	*Set pin #2 to high (state)*

Query Command

(GIO?)	*Request the state and configuration of all pins*
(GIO! "HHLLHLH" "OOIOOOI")	*Reply of pin state and configuration*
(GIO? C2)	*Request configuration for pin #2*
(GIO! C2 O)	*Reply with pin #2 configuration as output*
(GIO? 2)	*Request the state of pin #2*
(GIO! H)	*Reply with pin #2 state as high*

Real Time Event

Use the serial command **RTE** to specify an action that is initiated at a particular time or based on an external stimulus.

For General Purpose IO "G"

Parameter	**Name**	**Value**
P1	RTE type	G (Real Time I/O Event)
P2	I/O bit	1-7
P3	Pin state (1 Character) (String)	H = High L = Low "LHXXXHLX" Combine multiple inputs and trigger occurs when all conditions are met
P4	Commands	Any valid serial protocol command for the device

<u>Example 2.</u> Projector powers up when a switch on the external device is turned on.

(GIO C2 I)	*Set pin #2 configuration as input*
(RTE G 2 H "(PWR 1)")	Power on when pin #2 set to high
(RTE G 2 L "(PWR 0)")	Power off when pin #2 set to low

Appendix F

Optional Input Modules

The following optional input modules are currently available, and can be installed in either option slot in the projector (**INPUT 5** or **INPUT 6**). Contact your dealer for a complete and up-to-date listing.

NOTE: Any audio connectors shown are non-functional in this projector.

RGB500 Input Module 38-804606-xx

This module receives analog RGB input signals from computers or other RGB source devices.

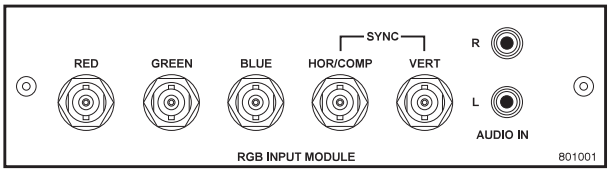

RGB500 Features

- ◊ accepts 3, 4, or 5 wire RGB video (sync-on-green, composite sync, or separate horizontal and vertical sync), up to 500 MHz bandwidth
- ◊ BNC connectors for RGB signal inputs

RGB400BA Input Module 38-804610-xx

Connect three-, four-, or five-wire RGB video signals of up to 400 MHz bandwidth—these are signals typically produced by high-resolution computer or workstations. The buffering capability of the module enables the incoming signal to be sent to a remote destination. Inputs are 75S terminated.

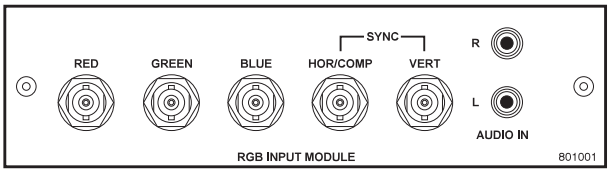

RGB400BA Features

- ◊ accepts 3, 4, or 5 wire RGB video (sync-on-green, composite sync, or separate horizontal and vertical sync)
- ◊ BNC connectors for RGB signal inputs
- ◊ Buffered signals to a remote destination

RGB400 Active Loop-Thru Input Module 38-804607-xx

This module receives analog RGB input signals from computers or other RGB source devices. Video inputs are 75S terminated. Video outputs provide buffered loop-through to another display device.

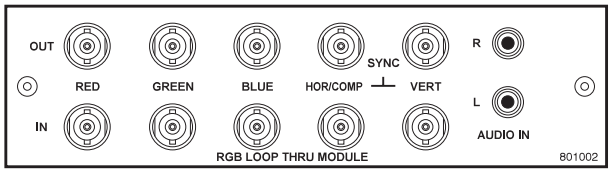

RGB400ALT Features

- ◊ accepts 3, 4, or 5 wire RGB video (sync-on-green, composite sync, or separate horizontal and vertical sync)
- ◊ BNC connectors for RGB signal inputs
- ◊ buffered loop-through video outputs

Composite / S-Video Input Module 38-804608-xx

This module receives composite video input signals from tape or disk players. Video inputs are 75S terminated. Outputs provide buffered loop-through to another display device, if desired.

*NOTES: : **1)** This interface is not a decoder. **2)** Not supported in v1.0 software.*

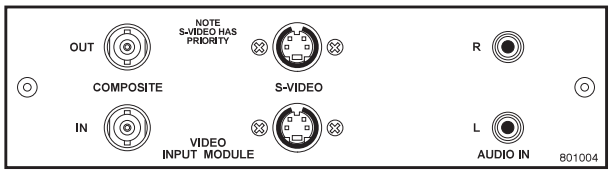

Composite/S-video Features

- ◊ BNC connectors for composite RGB signals
- ◊ 4-pin mini-DIN connectors for S-Video signals
- ◊ buffered loop-through video outputs

PC250 Analog Input Module 38-804609-xx

This module receives analog RGB input signals from IBM PC compatibles or Macintosh computers. Video inputs are 75S terminated. Outputs are provided for buffered loop-through to another display device.

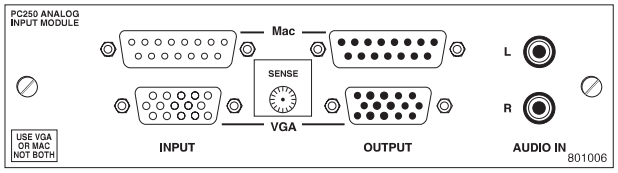

PC250 Analog Features

- ◊ accepts VGA or MAC RGB video
- ◊ 15 pin D connectors for video
- ◊ active loop-through video outputs

NOTES: ***1)*** *This interface does not accept VGA and MAC signals simultaneously.*

DVI Input Module 38-804635-xx

This module can display digital video input signals conforming to the DVI (Digital Visual Interface) single-channel standard.

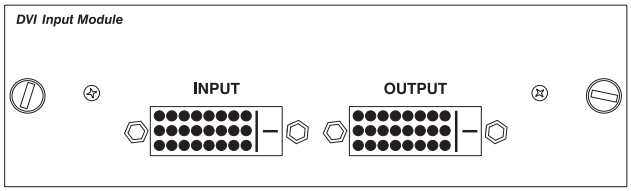

Features

- ◊ Supports Digital Visual Interface (DVI) single-channel
- ◊ Supports VESA® Extended Display Identification Data (EDID™)
- ◊ Provides an active-loop-through using a DVI connector (conforming to the DVI Specification)

Serial Digital Input Module 38-804602-xx

This module accepts a serial digital 4:2:2 component video signal (YCbCr) via a single **SERIAL IN** BNC connector. The signal can loop through the **SERIAL OUT** BNC out to another device (such as another projector). Inputs are 75S terminated.

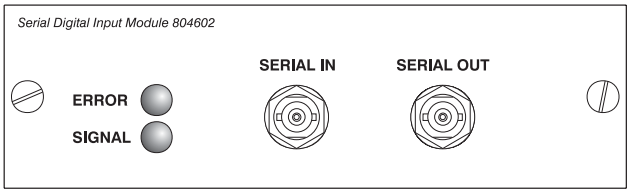

SDI Features

- ◊ accepts serial digital 4:2:2 component video (YCbCr)
- ◊ provides both a **SERIAL IN** and a **SERIAL OUT** BNC connector
- ◊ includes status LEDs for signal and error

Dual SD/HD-SDI Module 38-804656-xx

NOTE: Standard with this projector.

This module accepts one or two independent standard- or high-definition serial digital inputs, decodes them for processing in the main electronics of the projector, and outputs 10-bit YCbCr 4:2:2 video. Either input can be set as the active primary or secondary part of a Picture-in-Picture display, and either input can be looped through to one (or both) of the module's BNC outputs.

See *Section 2.5, Connecting Sources* for more information.

Index

3

3/2 Sync Offset, 5-3
3D Stereo Sync, 3-36
3D Stereo Sync Delay, 3-36
3D Stereo Sync Select, 3-36

A

AC
  Safety, 4-2
  Troubleshooting, 5-1
Active Input Window, 3-28
Advanced Image Settings Menu, 3-35
Advanced Size and Position Menu, 3-28
AGC, 3-31
Air Filter. *See* Filter (Air)
Alignment
  Boresight (Uniform Focus), 2-41
  For Screen, 2-40
  Optical, 2-40
All Joined (Network Setting), 2-37, 3-40
Ambient Light, 2-10
Anamorphic Adapter
  Installation, 2-17
Anamorphic Image, 3-26
Anamorphic Lens, 2-43
  Description, 3-66
  Focus, 2-44
  Use for Scope Images, 2-7
Apertures, optional, 2-44
Arrow Keys, 3-13
ASCII Messaging, 3-64
Auto Color Enable, 3-33
Auto Input Level, 3-33
Auto Power-up, 3-38
Auto Setup, 3-8, 3-24
Automatic Gain Control. *See* AGC
AutoSource Checkbox, 3-23

B

Back IR (Setting), 3-41
Backlight Key, 3-13
Bad Sync, 3-67
Ballast
  Breaker, 3-2
  Cable Length Setting, 2-5
  Cables, 3-4
  Connection to AC, *2-2*, 2-38
  Connection to Head, 2-39
  Control, 3-5
  Input Power Range Switch, *2-2*, 2-38
  Interlocks, 3-5
  On/Off, *2-2*
Baud Rate Settings, 3-39
Blacklevels and Drives, 3-33
Blanking, 3-28
Boresight Alignment, 2-41
  Left/Right, 2-42
  Top/Bottom, 2-43
Breaker, 3-2
Brightness
  And Apertures, 2-44
  Setup. *See* LampLOC
Brightness Key, 3-10, 3-29
Brightness Spec, 1-1, 6-1
Brightness Uniformity
  Canceling, 3-61
  Definition, 3-58
  Prerequisites, 3-58
  Procedure, 3-59
Brightness Uniformity Menu, 3-42
Broadcasting, 3-12, 3-41
Built-in Keypad
  Backlighting for, 3-41
Bulb. *See* Lamp

C

Cable Length, 2-5, 2-39, 3-52
CFM Requirement, 2-20
Channel
  Input, 3-23
  Locked, 3-23
  Name, 3-23
  Number, 3-20, 3-23
  Signal Type, 3-21
Channel Copy/Delete, 3-22
Channel Edit Menu, 3-22
Channel Key, 3-9, 3-19
Channel Selection, 3-20
Channel Setup Menu, 3-21
  And Enter Key, 3-22
  And Function Key, 3-21

Channels
Creating Automatically, 3-20
Creating in Channel Setup Menu, 3-22
Definition of, 3-19
Deleting in Channel Setup Menu, 3-22
Channels vs. Inputs, 3-19
Checkbox Toggles, 3-17
Clamp Location, 3-33
Cleaning, 4-4
of Lens, 4-5
of Non-optical Components, 4-6
of Reflector, 4-5
Supplies, 4-5
Color (Video Option), 3-32
Color Adjustments by X/Y Menu, 3-44
Color Defaults, 3-36
Color Enable, 3-34, 3-45
Color Gamut
How to Increase, 2-44
Color Gamuts, Unique, 3-43
Color Matching, 3-55
Color Primaries, Recovery, 3-42
Color Primary Settings. *See Color Matching*
Color Saturation Menu, 3-45
Color Space, 3-30
Color Temperature, 3-36
Communications Menu, 3-39
Component Video, 2-25
Comprehensive Color Adjustment, 3-42
Configuration Menu, 3-37, 3-42
Contrast Key, 3-10, 3-29
Contrast Ratio, 1-1, 6-1
And F# Aperture, 2-44
Controllers, 3-64
Convergence Adjustment, 2-44
Cooling
Liquid Cooling System, 2-22
Maintaining Proper, 4-3
Requirements, 2-18
Stacked Projectors, 2-15, 2-22
Custom Sizing, 3-25

D

Dark Interval, 3-36
Decoder Luma Delay, 3-32
Detail (Menu Option), 3-30
Detail Threshold, 3-37
DHCP Server, 2-31, 2-34, 3-40
Display Channel List, 3-38
Display Error Messages, 3-38
Display Slidebars, 3-38
DMD, 1-2
Do Auto, 3-53
Dual SD/HD-SDI, 2-26
Using Input On, 3-9, 3-10

E

Edge Blending
Definition and Use, 3-62
Procedure, 3-63
Edge Blending Menu, 3-42
Enable Decoder AGC, 3-31
Enter Key, 3-12
Error Messages
Bad Sync, 3-67
How to Find, 3-66
H-Sync or V-Sync, 3-67
No Signal, 3-67
System Warnings/Errors, 3-67
Ethernet
Factory-set, 1-3
How to Connect, 2-31, 3-5
IP Address Change, 2-31, 2-34
Networks, 2-33
Troubleshooting, 5-2
Ethernet Settings Menu, 3-40
Exhaust
Airflow Maintenance, 4-3
Connection, 2-18
Location, 3-3
Requirements, 2-21
Exit Key, 3-12
Extractor, 2-3, 3-6
Installation of, 2-18
Load Rating, 2-20

F

Fade Time Setting, 3-37
Feet, 2-14, 3-4
Film Mode Threshold, 3-37
Filter (Air) Location and Function, 3-2
Filter (Air) Replacement/Installation, 4-11
Filter (Air) Warning, 4-3
Filter (Menu Option), 3-30
Focus, 2-43
Side-to-side, 2-42
Top-to-bottom, 2-43
Focus Adjustment, 2-41, 3-66
Fold Mirror Adjustment, 2-44
Formats, Flat & Scope, 2-7, 2-9
Frame Delay, 3-36
FredFrame, *2-15*
Freeze Image, 3-45
Front IR (Setting), 3-41
Full Height, 3-26
Full Screen, 3-26
Full Width, 3-26
Function Key Codes, 3-12

G

Gamma, 6-1
Using Custom Curves, 3-35
Gamma Key or Option, 3-11, 3-29
Gamma Table, 3-35
General Purpose In/Out. *See* GPIO
Globe Icon, 3-16
GPIO, 2-31

H

HDTV Connection, 2-27
Help
Context-sensitive, 3-15
General Topics, 3-16

Help Key, 3-9
Hoisting, 2-15
Horizontal Offset Range, 2-13
Horizontal Position, 3-27
Horizontal Shift, 3-38

I

Image Adjustments, 3-24
Image Orientation Setting, 3-37
Image Settings Menu, 3-29
InMenu Checkbox, 3-23
Input 1, 2-24
Input 2, 2-27
Input 3, 2-26
Input 4, 2-26
Input 5, 2-26
Input 7, 3-9
Input 8, 3-10
Input Key, 3-10
Input Levels Menu, 3-32
Input Power Range Switch, 2-38
Input Video Black, 3-31, 3-32
Inputs
  Connection, 2-1
  Definition of, 3-19
  Input Keys, 3-9
  Selecting/switching, 3-19
  Selection, 2-4
  Specifications, 6-2
  Types, 1-2
Installation
  Anamorphic Adapter, 2-17
  Basic Image Alignment, 2-40
  Dual SD/HD-SDI, 2-26
  Ethernet, 2-31
  Exhaust Ducting, 2-18
  Feet, 2-14
  FredFrame, *2-15*
  Hoisting, 2-15
  Horizontal Position, 2-13
  Lamp, 2-17
  Lenses, 2-16
  Maximizing Light Output, 2-40
  Serial Communications, 2-29
  Stacking, *2-15*
  Tilt Range, 2-14
  Using a Forklift, *2-15*
  Vertical Position, 2-11
Installation Tips, 2-5, 2-10
Interfaces,Optional, 2-27
Interlocks, 4-4
Invalid Channel, 3-66
IP Address, 1-3, 2-34, 3-40

K

Keypad, Built-in, 3-6
Keypads, IR or Wired. *See* Remote Keypads

L

Lamp
  Adjusting Position, 3-53
  Cables from Ballast, 3-48
  Compatible Lamps, 2-17
  Cooldown, 3-15
  Cooling, 4-3
  Cradle Position (Anode), 2-18
  Current Ranges, 3-53
  Failure to Ignite, 3-14, 3-49, 5-1
  Hours of Use, 3-54
  How to Use, 3-47
  Initial Installation, 2-17
  Mode, 3-50
  Models & Specifications, 6-5
  Password. *See* Lamp Type, Password for Changing
  Power on/off, 2-4
  Power Setting, 3-51
  Protective Clothing, 4-2
  Recording Serial Number, 3-52
  Stand-by Mode, 3-54
  Troubleshooting, 5-1
  Turning on/off, 3-14, 3-49
  Warnings, 4-2
  When to Replace, 3-54
Lamp Alignment. *See* LampLOC
Lamp History, 3-52
Lamp Hours, 3-49
Lamp Installation/Replacement, 4-6
Lamp Limit, 3-50
Lamp Menu, 3-49
Lamp Message, 3-50
Lamp Modes, 3-50
Lamp Serial Number, 3-49
Lamp Size. *See Lamp Type*
Lamp Type, 3-4
  Default, 2-4
  How to Check, 2-4, 3-47
  Password for Changing, 2-4, 2-39, 3-47, 4-10
  Setting, 2-3
  Shown in LCD, 3-14
LampLOC, 2-40, 3-53
  Procedure, 3-53
  Troubleshooting, 5-2
Language Setting, 3-37
LEDs, Status Codes, 3-68
Lens
  And Screen Size, 2-6
  Cleaning, 4-4, 4-5
  Focus Adj., 3-66
  How to Identify, 3-65
  Installation/Replacement, 4-12
  List & Specifications, 6-1
  Offset Adj., 3-65
  Use of Anamophic, 3-66
  Zoom Adj., 3-65
Lens Installation/Replacement, 2-16
Lens Keys, 3-13
Lens Mount
  Description, 3-4, 3-65
Level Detector, 3-47
Level Value, 3-47
Leveling (Hor.)
  Final Side-to-Side, 2-41
Liquid Cooling, 2-22

LiteLOC, 3-51
Troubleshooting, 5-2
Load Rating, 2-15
Locked Channel Checkbox, 3-23
Locks, Security, 3-6
Luma Delay, 3-32

M

Main Menu, 3-15
Maintenance, 4-4
Masking, 2-8
Menu
Advanced IMage Settings, 3-35
Advanced Size and Position, 3-28
Brightness Uniformity, 3-42
Channel Edit, 3-22
Channel Setup, 3-21
Color Adjustments by X/Y, 3-44
Color Saturation, 3-45
Communications, 3-39
Configuration, 3-37, 3-42
Edge Blending, 3-42
Ethernet Settings, 3-40
Image Settings, 3-29
Lamp, 3-49
Menu Preferences, 3-38
Odd Pixel Adjustment, 3-46
Size and Position, 3-24
Status, 3-54
Video Options, 3-31
Menu Font Size, 3-38
Menu Key, 3-11
Menu Location on Screen, 3-38
Menu Navigation, 3-15, 3-24
Menu Preferences Menu, 3-38
Menu Time-outs, 3-16
Menus
Blind Use Of, 3-16
Motion Filter, 3-36

N

Native Format Displays, 3-25
Network Routing, 3-39
Networks, 2-32
Ethernet, 2-33
Joined Serial, 2-33, 2-34, 2-37
RS232 or RS422, 2-32
Separate, 2-34, 2-37, 3-39
Setup in Software, 3-39
No Resizing, 3-25
No Signal, 3-67
Noise Reduction, 3-30
Numerical Entry, 3-18

O

Odd Pixel Adjustment Menu, 3-46
Offset Adjustment on Lens Mount, 3-65
Offset, Horizontal, 2-13, 6-1
Offset, Vertical, 2-11, 6-1
Option 1, 3-9, 3-10
Optional Inputs, 2-27
Options, 6-8
Options for Projector, 6-8
OSD Key, 3-11

P

Password, 2-4, 2-39, 3-47, 4-10
Peak Detector, 3-34, 3-46
Picture-in-Picture. *See* PIP Key
PIP Enable, 3-28
PIP Key, 3-13
Pixel Phase, 3-27
Pixel Tracking, 3-27
Plug & Display (EDID), 3-28
Port (Ethernet Setting), 3-41
Power
Connection, 2-3
For Extractor, 2-21
For Projection Head, *2-3*
Setting Ballast, *2-2*
Setting for Lamp, 3-51
Specifications, 6-4
Troubleshooting, 5-1
Warning, 2-3
Power-down
How to, 3-15
Power-up, How to, 3-14
Primary Colors, Adjusting, 3-55
Projection Head
Built-in Keypad, 3-6
Connection to AC, *2-3*, 3-6
Connection to Ballast, *2-1*
Function, 3-4
Locks, 3-6
Rear Control Panel, 3-3
Turning on/off, 3-8
Projector
Components, 3-1, 6-8
Dimensions and Weight, 6-6
Features, 1-1
How it Works, 1-2
Installation, 2-5
Options, 6-8
Quick Setup, *2-1*
Resetting, 3-67
Specifications, 6-1
Standard Components, 1-3
Status Display, 3-66
Vertical Position, 2-11
Projector Key, 3-12
Projector Number, 2-37, 3-39
Protocols, 3-41
Changing in Projector, 3-41
Pull-Down Lists, Use of, 3-17

R

Rear Connection Panel, 3-5
Reflector
Cleaning, 4-5
Remote Keypads, 3-6
And Sensor Response, 2-45
Compatibility, 2-28
Guide to Keys, 3-8

IR, 3-7
Jumper Settings, 2-46
Keys and Use, 3-7
Optional "Lite", 3-6
Protocols, 2-45
Wired, 3-8, 3-41
Wired Conversion, 2-47
Resize Presets, 3-25
Resolution, 6-1
Rigging. *See* Hoisting
RS232
Connection, 2-29
Networks, 2-32
Specifications, 6-3
RS232 and Ethernet Joined, 3-40
RS232 and RS422 Joined, 3-40
RS422
And XLR Ports, 2-30
Connection, 2-29
Networks, 2-32
Specifications, 6-4

S

Screen Aspect Ratio, 2-6
Screen Size, 2-6
Screen Types, 2-5
Secondary Image, 3-13
Select Color Adjustment, 3-35
Serial Communication, 2-29
Service Contacts, 1-3
Set Date & Time, 3-38
Setup, Quick, *2-1*
Shutter and Lamp Power, 3-54
Shutter Key, 3-11
Size and Position Menu, 3-24
Size of Image, 3-25, 3-26
Slidebar Adjustment, 3-16
SMPTE
Connection, 2-26
Softward Download Caution, 2-36
Source
Connection, 2-1
Split Networks
And Downloads, 2-36
Options for Setup, 2-35
Stand-by, 2-3, 3-54
Status Light, Large, 3-6
Status Menu, 3-54
Swap Key, 3-13
Swap PIP, 3-27
Sync
Def. and types, 8
Sync Tip Clamping. *See* Clamp Location

T

Test Pattern Grey Level, 3-45
Test Pattern Key, 3-8
Test Patterns via Menus, 3-42, 3-45
Text
Editing, 3-18
Throw Distance
And Screen Size, 2-11
Definition, 2-10
Tilt, 2-14
Tint (Video Option), 3-32
Troubleshooting
Displays, 5-2
Ethernet, 5-2
Lamp, 5-1
Power, 5-1

U

UV Warnings, 4-1

V

Vertical Keystone, 3-42
Vertical Offset Range, 2-11
Vertical Position, 3-27
Vertical Shift, 3-38
Vertical Stretch, 3-26
Video Options Submenu, 3-31
Video Standard, 3-31
Voltmeter, 3-6

W

Warnings for Lamp, 4-2
Warnings for Operation, 4-1
Whitelevels Adjust, 3-32
Wired Remote. *See* Remote Keypads

Y

YCbCr
Connection, 2-26
Yellow Notch Filter, 2-44
YPbPr, 3-30
Connection, 2-25

Z

Zoom Adjustment (Primary Lens), 3-65