USA's primary source for projector lamps
myprojectorlamps

PROJECTOR OWNER'S MANUAL

Christie

DS 750

Need a replacement lamp for this projector?

www.myprojectorlamps.com

Original manufacturer manual, provided unmodified as a courtesy of MyProjectorLamps.com.
All trademarks belong to their respective owners.

DS+750

USER MANUAL

020-000210-01

CHRISTIE®

CHRISTIE®

DS+750

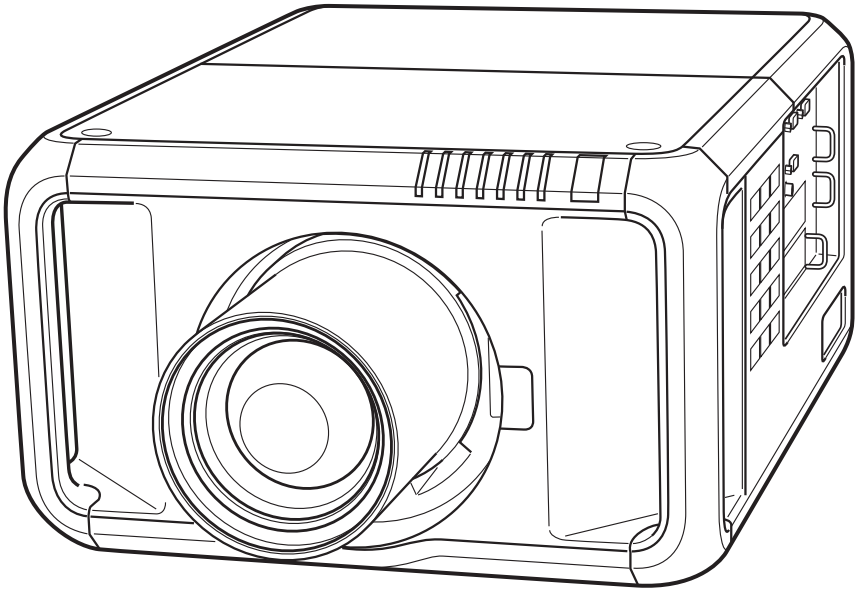

✻ Lens not included.

User's Manual

This Multimedia Projector is designed with most advanced technology for portability, durability, and ease of use. This projector utilizes built-in multimedia features.

◆ DLP® projector with high resolution

This projector is compatible with Full HD signals, allowing high definition projection. It is also compatible with two different types of user-changeable color wheels allowing high brightness or rich color reproduction. The combination of BrilliantColor™ and the rich color reproduction color wheels (supplied) offer a more true color reproduction.

◆ Functionally Rich

This projector has many useful functions such as lens shifting, ceiling and rear projection, perpendicular omnidirectional projection, variety of lens options, etc.

◆ Simple Computer System Setting

The projector has the Multi-scan system to conform to almost all computer output signals quickly (p.35). Supported resolution up to WUXGA.

◆ Security Function

The Security function helps you to ensure security of the projector. With the Key lock function, you can lock the operation on the side control or remote control (p.58). PIN code lock functions prevents unauthorized use of the projector (pp.58–59).

◆ Power Management

The Power management function reduces power consumption and maintains lamp life (p.57).

◆ Picture-in-Picture

This projector is capable of projecting two images simultaneously by placing a separate small sub screen within or next to the main screen. (P.51)

◆ Multilanguage Menu Display

Operation menu is available in 12 languages; English, German, French, Italian, Spanish, Portuguese, Dutch, Swedish, Russian, Chinese, Korean, and Japanese (p.49).

◆ Motor-driven Lens Shift

Projection lens can be moved up, down, right and left with the motor-driven lens shift function. This function makes it easy to provide projected image where you want. Zoom and focus can also be adjusted with a motor-driven operation. (p.28)

*Zoom and focus functions may not operate depending on the optional lens.

◆ Shutter Function

The projector is equipped with the shutter that provides complete blackness for a while the projected image is not needed with keeping the projector on. The Shutter management function allows you to set the timer. It prevents leaving the projector on with the shutter closed for a long time. (p.60)

◆ Multi Versatile Platform

This projector applies various input/output terminals and 2 terminal slots for expansion to tune to diversity of signals from computers and video equipment (pp.19-21). For optional interface boards, contact sales dealer where you purchased the projector.

◆ Network board

This projector is equipped with a Network board to control and set up the projector via the network cables with the web browser on your computer. The projector can be controlled and set up remotely.

✔ ***Note:***

- *The On-Screen Menu and figures in this manual may differ slightly from the product.*
- *The contents of this manual are subject to change without notice.*

Table of Contents

Features and Design 2
Table of Contents 3
To The Owner 4
Safety Instructions 5
Air Circulation 6
Installing the Projector in Proper Directions 7
Moving the Projector 8
Compliance 9
Part Names and Functions. 10
Front 10
Back 10
Terminals and Connectors 11
Side Control and Indicators 12
Side Control 12
Indicators 13
Remote Control 14
Remote Control Battery Installation 15
Remote Control Receivers and Operating Range 15
Wired Remote Control 15
Remote Control Code 16
Installation 17
Lens Installation 17
Positioning Projector 17
Picture Level and Pitch Adjustment 17
Lens Shift Adjustment 18
Terminals of Projector 19
Connecting to Computer 20
Connecting to Video Equipment 21
Attaching the Cable Cover 22
Connecting the AC Power Cord 23
Basic Operation 24
Turning On the Projector 24
Turning Off the Projector 25
How to Operate the On-Screen Menu 26
Menu Bar 27
Operating with Projector Control 28
Operating with Remote Control 30
Input Selection 32
Input 32
Computer Input Source Selection 33
Video Input Source Selection 34
Computer Input 35
Computer System Selection 35
Auto PC Adjustment 36
Manual PC Adjustment 37
Image Level Selection 39
Screen Size Adjustment 40
Video Input 42
Video System Selection 42
Image Level Selection 43
Screen Size Adjustment 44
Picture Image 46
Image Adjustment 46
Setting 49
Setting 49
Maintenance and Care 62
Optional Filter Instructions 62
Installing the Filter Cartridge 63
Resetting the Filter Counter 64
Resetting the Scroll Counter 64
Lamp Management 65
Lamp Replacement 66
Optional Color Wheel Installation 68
Cleaning the Projection Lens 69
Cleaning the Projector Cabinet 69
Warning Indicators 70
Appendix 71
Troubleshooting 71
Menu Tree 74
Indicators and Projector Condition 77
Compatible Computer Specifications 80
List of Picture in Picture 82
Technical Specifications 83
Optional Parts 84
Configurations of Terminals 85
PIN Code Number Memo 86
Dimensions 87
How to adjust multiple screens 88

Trademarks

Each name of corporations or products in this book is either a registered trademark or a trademark of its respective corporation.

DLP is a registered trademark of Texas Instruments. BrilliantColor and DynamicBlack are trademarks of Texas Instruments.

Before installing and operating the projector, read this manual thoroughly.
The projector provides many convenient features and functions. Operating the projector properly enables you to manage those features and maintains it in good condition for many years to come.
Improper operation may result in not only shortening the product life, but also malfunctions, fire hazard, or other accidents.
If your projector seems to operate improperly, read this manual again, check operations and cable connections and try the solutions in the "Troubleshooting" section in the back of this manual. If the problem still persists, contact the dealer where you purchased the projector or the service center.

CAUTION

RISK OF ELECTRIC SHOCK
DO NOT OPEN

CAUTION: TO REDUCE THE RISK OF ELECTRIC SHOCK, DO NOT REMOVE COVER (OR BACK). NO USER-SERVICEABLE PARTS INSIDE EXCEPT LAMP REPLACEMENT. REFER SERVICING TO QUALIFIED SERVICE PERSONNEL.

THIS SYMBOL INDICATES THAT DANGEROUS VOLTAGE CONSTITUTING A RISK OF ELECTRIC SHOCK IS PRESENT WITHIN THIS UNIT.

THIS SYMBOL INDICATES THAT THERE ARE IMPORTANT OPERATING AND MAINTENANCE INSTRUCTIONS IN THE OWNER'S MANUAL WITH THIS UNIT.

The symbol mark and recycling systems described below apply to EU countries and do not apply to countries in other areas of the world.
Your product is designed and manufactured with high quality materials and components which can be recycled and/or reused.
The symbol mark means that electrical and electronic equipment, batteries and accumulators, at their end-of-life, should be disposed of separately from your household waste.

Note:
If a chemical symbol is printed beneath the symbol mark, this chemical symbol means that the battery or accumulator contains a heavy metal at a certain concentration. This will be indicated as follows: Hg: mercury, Cd: cadmium, Pb: lead.
In the European Union there are separate collection systems for used electrical and electronic equipment, batteries and accumulators.
Please, dispose of them correctly at your local community waste collection/recycling centre.

Please, help us to conserve the environment we live in!

Safety Precaution

WARNING:
- **THIS APPARATUS MUST BE EARTHED.**
- **TO REDUCE THE RISK OF FIRE OR ELECTRIC SHOCK, DO NOT EXPOSE THIS APPLIANCE TO RAIN OR MOISTURE.**

– This projector produces intense light from the projection lens. Do not stare directly into the lens, otherwise eye damage could result. Be especially careful that children do not stare directly into the beam.
– Install the projector in a proper position. Otherwise it may result in a fire hazard.
– Allowing the proper amount of space on the top, sides, and rear of the projector cabinet is critical for proper air circulation and cooling of the unit. The diagrams shown here indicates the minimum space required. If the projector is to be built into a compartment or similarly enclosed, these minimum distances must be maintained.
– Do not cover the ventilation slots on the projector. Heat build-up can reduce the service life of your projector, and can also be dangerous.

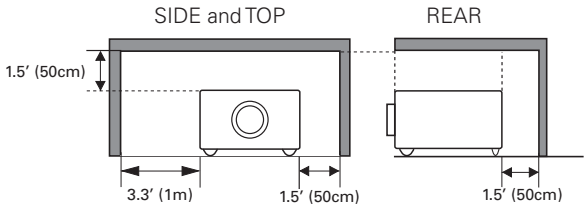

– If the projector is unused for an extended time, unplug the projector from the power outlet.

CAUTION ON HANGING FROM THE CEILING

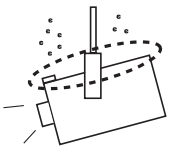

When hanging the projector from the ceiling, clean the air intake vents and top of the projector periodically with a vacuum cleaner. If you leave the projector unclean for a long time, the cooling fans can be clogged with dust, and it may cause a breakdown or a disaster.

DO NOT SET THE PROJECTOR IN GREASY, WET, OR SMOKY CONDITIONS SUCH AS IN A KITCHEN TO PREVENT A BREAKDOWN OR A DISASTER. IF THE PROJECTOR COMES IN CONTACT WITH OIL OR CHEMICALS, IT MAY BECOME DETERIORATED.

CAUTION

Not for use in a computer room as defined in the Standard for the Protection of Electronic Computer/Data Processing Equipment, ANSI/NFPA 75.

Ne peut être utilisé dans une salle d'ordinateurs telle que définie dans la norme ANSI/NFPA 75 Standard for Protection of Electronic Computer/Data Processing Equipment.

READ AND KEEP THIS OWNER'S MANUAL FOR LATER USE.

All the safety and operating instructions should be read before the product is operated.

Read all of the instructions given here and retain them for later use. Unplug this projector from AC power supply before cleaning. Do not use liquid or aerosol cleaners. Use a damp cloth for cleaning.

Follow all warnings and instructions marked on the projector.

For added protection to the projector during a lightning storm, or when it is left unattended and unused for long periods of time, unplug it from the wall outlet. This will prevent damage due to lightning and power line surges.

Do not expose this unit to rain or use near water... for example, in a wet basement, near a swimming pool, etc...

Do not use attachments not recommended by the manufacturer as they may cause hazards.

Do not place this projector on an unstable cart, stand, or table. The projector may fall, causing serious injury to a child or adult, and serious damage to the projector. Use only with a cart or stand recommended by the manufacturer, or sold with the projector. Wall or shelf mounting should follow the manufacturer's instructions, and should use a mounting kit approved by the manufacturers.

An appliance and cart combination should be moved with care. Quick stops, excessive force, and uneven surfaces may cause the appliance and cart combination to overturn.

Slots and openings in the back and bottom of the cabinet are provided for ventilation, to ensure reliable operation of the equipment and to protect it from overheating.

The openings should never be covered with cloth or other materials, and the bottom opening should not be blocked by placing the projector on a bed, sofa, rug, or other similar surface. This projector should never be placed near or over a radiator or heat register.

This projector should not be placed in a built-in installation such as a book case unless proper ventilation is provided.

Never push objects of any kind into this projector through cabinet slots as they may touch dangerous voltage points or short out parts that could result in a fire or electric shock. Never spill liquid of any kind on the projector.

Do not install the projector near the ventilation duct of air-conditioning equipment.

This projector should be operated only from the type of power source indicated on the marking label. If you are not sure of the type of power supplied, consult your authorized dealer or local power company.

Do not overload wall outlets and extension cords as this can result in fire or electric shock. Do not allow anything to rest on the power cord. Do not locate this projector where the cord may be damaged by persons walking on it.

Do not attempt to service this projector yourself as opening or removing covers may expose you to dangerous voltage or other hazards. Refer all servicing to qualified service personnel.

Unplug this projector from wall outlet and refer servicing to qualified service personnel under the following conditions:

a. When the power cord or plug is damaged or frayed.
b. If liquid has been spilled into the projector.
c. If the projector has been exposed to rain or water.
d. If the projector does not operate normally by following the operating instructions. Adjust only those controls that are covered by the operating instructions as improper adjustment of other controls may result in damage and will often require extensive work by a qualified technician to restore the projector to normal operation.
e. If the projector has been dropped or the cabinet has been damaged.
f. When the projector exhibits a distinct change in performance-this indicates a need for service.

When replacement parts are required, be sure the service technician has used replacement parts specified by the manufacturer that have the same characteristics as the original part. Unauthorized substitutions may result in fire, electric shock, or injury to persons.

Upon completion of any service or repairs to this projector, ask the service technician to perform routine safety checks to determine that the projector is in safe operating condition.

NOTE FOR CUSTOMERS IN THE US

Hg LAMP(S) INSIDE THIS PRODUCT CONTAIN MERCURY AND MUST BE RECYCLED OR DISPOSED OF ACCORDING TO LOCAL, STATE OR FEDERAL LAWS.

Air Circulation

Openings in the cabinet are provided for ventilation. To ensure reliable operation of the product and to protect it from overheating, these openings must not be blocked or covered.

CAUTION

Hot air is exhausted from the exhaust vent. When using or installing the projector, the following precautions should be taken.

–Do not put any flammable object or spray can near the projector, hot air is exhausted from the air vents.
–Keep the exhaust vent at least 3' (1 m) away from any objects.
–Do not touch peripheral parts of the exhaust vent, especially screws and metallic parts. These areas will become hot while the projector is being used.
–Do not put anything on the cabinet. Objects put on the cabinet will not only get damaged but also may cause fire hazard by heat.
–Do not cover vents with papers or other materials.
–Make sure that there are no objects under the projector. An object under the projector may prevent the projector from taking cooling air through bottom vent.
–In order to care for the projector appropriately, regular cleaning is required. Remove any dirt or dust that has accumulated on the projector.

Cooling fans are provided to cool down the projector. The fans' running speed is changed according to the temperature inside the projector.

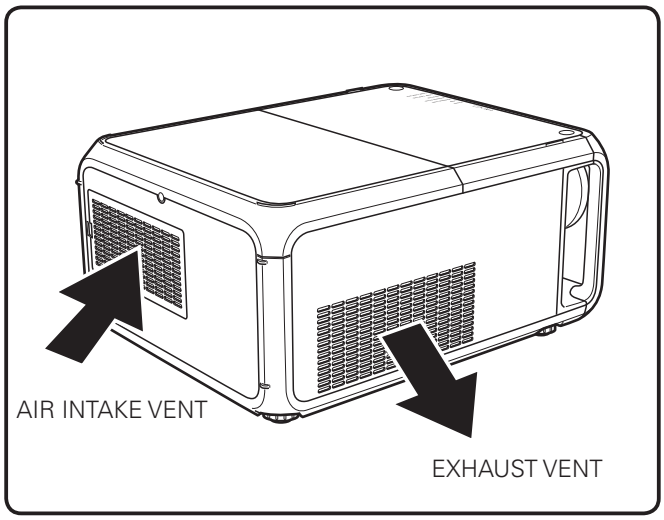

Installing the Projector in Proper Directions

Use the projector properly in specified positions. Improper positioning may reduce the lamp life and result in severe accident or fire hazard.
This projector can project the picture in upward, downward, or inclined position in perpendicular direction to the horizontal plane.

✔ ***Note:***

- *To inverse or reverse the image, set the ceiling function to "On." (pp.41, 45)*
- *The projector cannot be operated at an altitude above 3,000 meters.*

Positioning Precautions

Avoid positioning the projector as described below when installing.

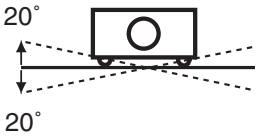

Do not roll the projector more than 20 degrees from side to side.

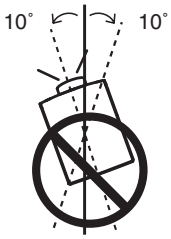

In upward projection, do not tilt the projector over 10 degrees right and left.

Do not put the projector on either side to project an image.

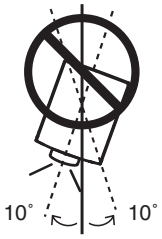

In downward projection, do not tilt the projector over 10 degrees right and left.

CAUTION ON CEILING MOUNTING

For ceiling mounting, you need the ceiling mount kit designed for this projector. When not mounted properly, the projector may fall, causing hazards or injury. For details, consult your dealer. The warranty on this projector does not cover any damage caused by use of any non-recommended ceiling mount kit or installation of the ceiling mount kit in an improper location.

Moving the Projector

Retract the adjustable feet to prevent damage to lens and cabinet. For safety, holding the projector on both sides by 2 or more people is recommended to move the projector because the projector is heavy. When moving the projector by one person from necessity, hold the handle carefully. Moving it improperly may result in damage of cabinet or person's injury.

CAUTION IN CARRYING OR TRANSPORTING THE PROJECTOR

–Do not drop or bump the projector, otherwise damages or malfunctions may result.
–When carrying the projector, use a suitable carrying case.
–Do not transport the projector by courier or any other transport service in an unsuitable transport case. This may cause damage to the projector. For information about transporting the projector by courier or any other transport service, consult your dealer.
–Do not put the projector in a case before it is cooled enough.
–Do not transport the projector with a replacement lens installed.

How to move the projector by one person

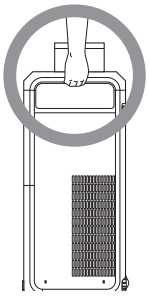

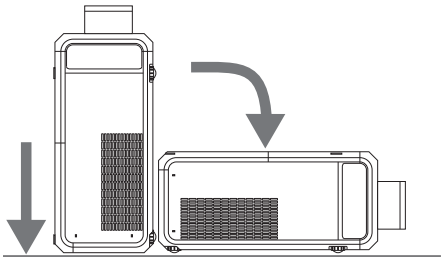

When moving the projector by one person, grip handles and carry it with lens side up. Then, lay it down on the correct position.

Federal Communications Commission Notice

This equipment has been tested and found to comply with the limits for a Class A digital device, pursuant to Part 15 of FCC Rules. These limits are designed to provide reasonable protection against harmful interference when the equipment is operated in a commercial environment. This equipment generates, uses, and can radiate radio frequency energy and, if not installed and used in accordance with the instruction manual, may cause harmful interference to radio communications. Operation of this equipment in a residential area is likely to cause harmful interference in which case the user will be required to correct the interference at his own expense.

Do not make any changes or modifications to the equipment unless otherwise specified in the instructions. If such changes or modifications should be made, you could be required to stop operation of the equipment.

Canadian Radio Interference Regulations

This Class A digital apparatus meets all requirements of the Canadian ICES-003.

WARNING

This is a Class A product. In a domestic environment this product may cause radio interference in which case the user may be required to take adequate measures.

AC Power Cord Requirement

The AC Power Cord supplied with this projector meets the requirement for use in the country you purchased it.

AC Power Cord for the United States and Canada:

AC Power Cord used in the United States and Canada is listed by the Underwriters Laboratories (UL) and certified by the Canadian Standard Association (CSA).

AC Power Cord has a grounding-type AC line plug. This is a safety feature to be sure that the plug will fit into the power outlet. Do not try to defeat this safety feature. Should you be unable to insert the plug into the outlet, contact your electrician.

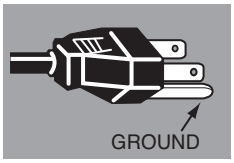

THE SOCKET-OUTLET SHOULD BE INSTALLED NEAR THE EQUIPMENT AND EASILY ACCESSIBLE.

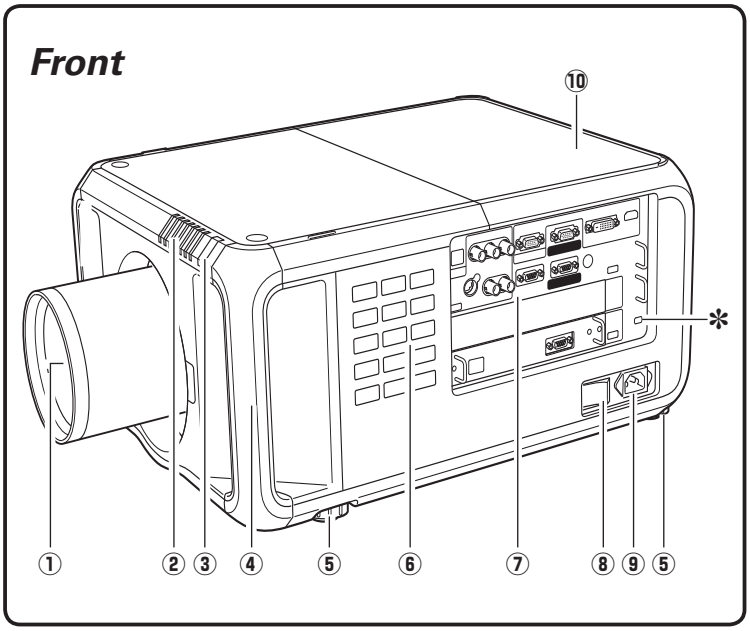

① **Projection Lens (Option)**
② **Indicators**
③ **Infrared Remote Receiver (Front)**
④ **Handle**
⑤ **Adjustable Feet**
⑥ **Side Control**
⑦ **Terminals and Connectors**
⑧ **Main On/Off Switch**
⑨ **Power Cord Connector**
⑩ **Lamp Cover**

✻Kensington Security Slot

This slot is for a Kensington lock used to deter theft of the projector.

*Kensington is a registered trademark of ACCO Brands Corporation.

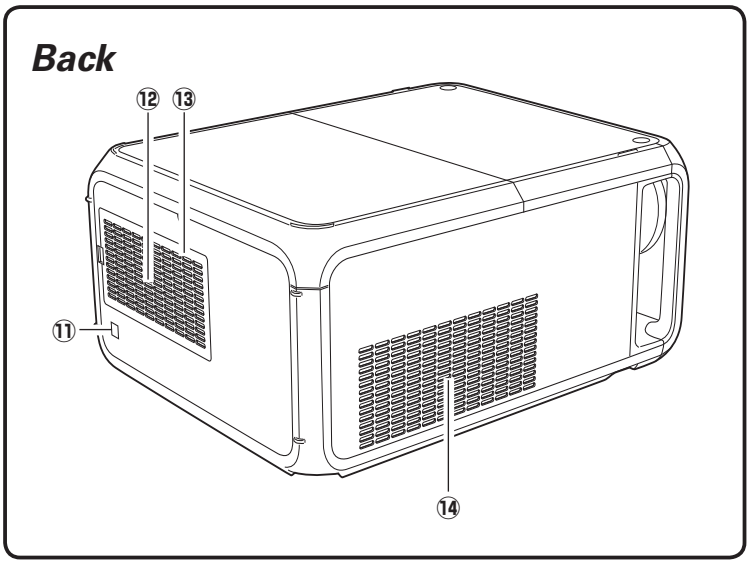

⑪ **Infrared Remote Receiver (Rear)**
⑫ **Air Intake Vent**
⑬ **Air Filter Cover**
⑭ **Exhaust Vent**

CAUTION

Hot air is exhausted from the exhaust vent. Do not put heat-sensitive objects near this side.

Terminals and Connectors

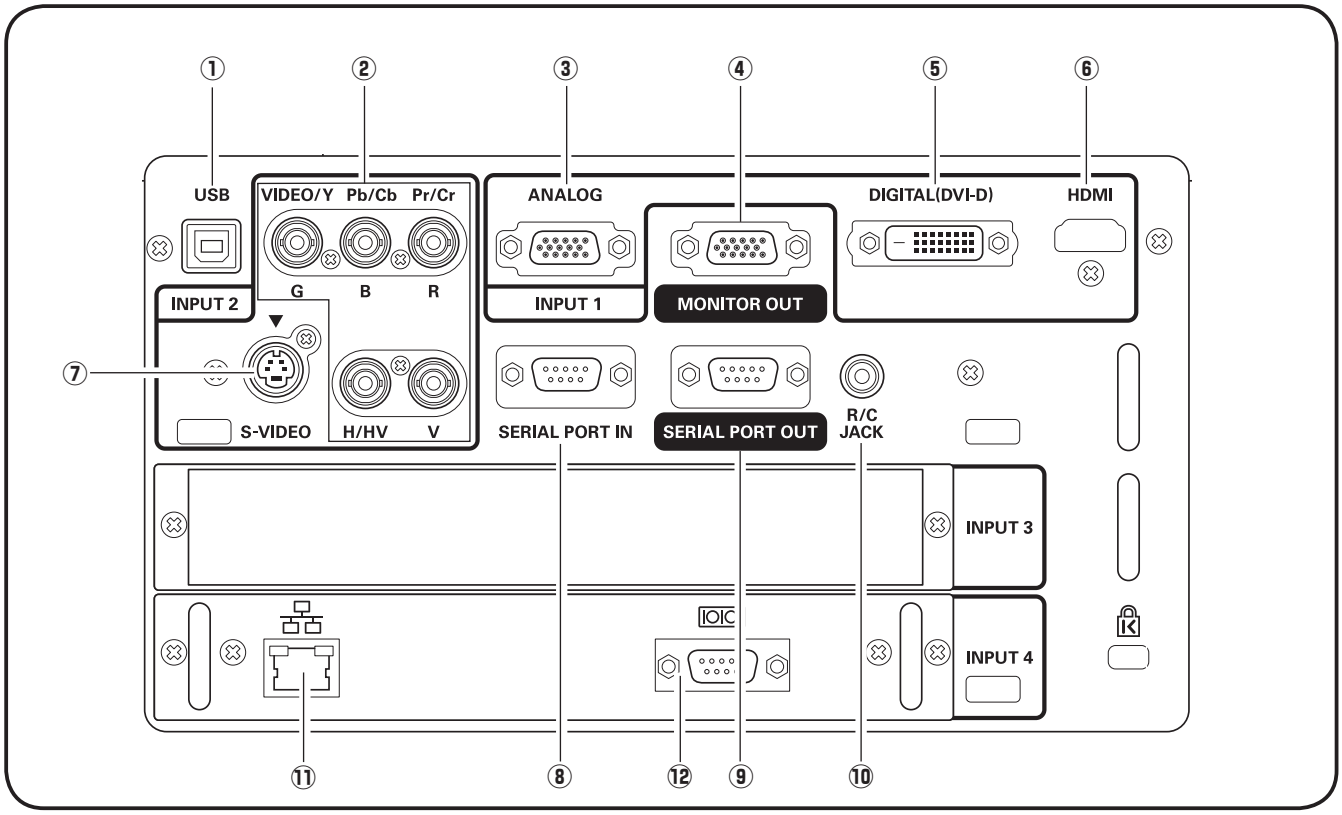

① **USB CONNECTOR (Series B)**
USB connector is used to service the projector.

② **5 BNC INPUT JACKS**
Connect the component or composite video output signal from video equipment to VIDEO/Y, Pb/Cb, and Pr/Cr jacks or connect the computer output signal (5 BNC Type [Green, Blue, Red, Horiz. Sync, and Vert. Sync.]) to G, B, R, H/V, and V jacks. (pp.20–21)

③ **D-sub 15-PIN INPUT TERMINAL**
Connect computer output (Analog D-sub 15-pin type) to this terminal. (pp.20-21)

④ **MONITOR OUT TERMINAL**
This terminal can be used to output the incoming analog RGB, component, or composite video out signals from INPUT 1-2 terminal to the other monitor. (pp.20-21)

⑤ **DVI INPUT TERMINAL**
Connect computer output (Digital/DVI-D type) to this terminal. (p.20)
HDTV (HDCP Compatible) signal can be also connected. (p.21)

⑥ **HDMI**
Connect the HDMI output signal from video equipment to this terminal. (p.21)

⑦ **S-VIDEO INPUT JACK**
Connect the S-VIDEO output signal from video equipment to this jack. (p.21)

⑧ **SERIAL PORT IN TERMINAL**
If you control the projector by computer, you must connect a cable (not supplied) from your computer to this terminal.

⑨ **SERIAL PORT OUT TERMINAL**
This terminal outputs signal from SERIAL PORT IN. More than two projectors can be controlled with one computer by connecting SERIAL PORT IN of another projector to this terminal.

⑩ **R/C JACK**
When using the wired remote control, connect the wired remote control to this jack with a remote control cable (not supplied).

⑪ **LAN port**
Connecting the LAN cable. See the owner's manual of the Network Board for details.

⑫ **Serial port**
This is used when controlling the external equipment via the network.

Side Control and Indicators

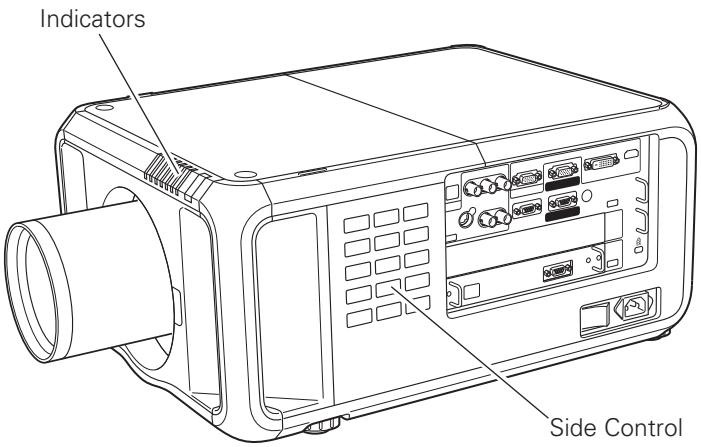

Side Control

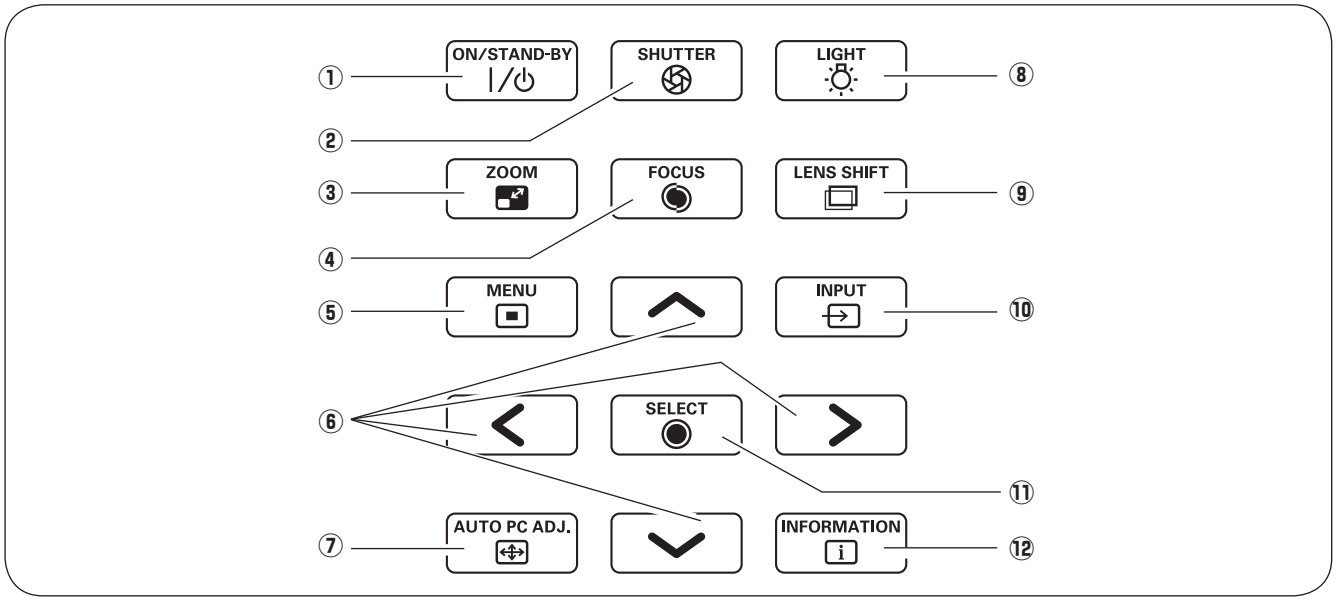

① **ON/STAND-BY button**
Turn the projector on or off. (pp.24,25)

② **SHUTTER button**
Close and open up the built-in shutter. (p.28)

③ **ZOOM button**
Zoom in and out the images. (p.28)

④ **FOCUS button**
Adjust the focus. (p.28)

⑤ **MENU button**
Open or close the On-Screen MENU. (pp.26, 27)

⑥ **POINT buttons**
- Select an item or adjust the value in the On-Screen MENU. (p.26)
- Pan the image in DIGITAL ZOOM + mode. (p.41)

⑦ **AUTO PC ADJ. button**
Automatically adjust the computer image to its optimum setting. (pp.28, 36)

⑧ **LIGHT button**
Light the side control and around terminals. (p.28)

⑨ **LENS SHIFT button**
Select the LENS SHIFT function. (p.28)

⑩ **INPUT button**
Select an input source INPUT 1, INPUT 2, Input 3 or Input 4. (pp.32-34)

⑪ **SELECT button**
Used to execute the selected item. (p.26) It is also used to expand image in DIGITAL ZOOM mode. (p.41)

⑫ **INFORMATION button**
Display the input source information (p.29).

Indicators

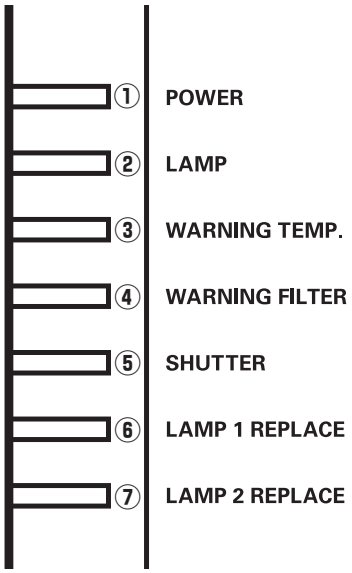

① **POWER indicator**
This indicator lights green when the projector is ready to be turned on. And it flashes green in Power Management mode. (pp.57, 77-79)

② **LAMP Indicator**
This indicator is dim when the projector is turned on. And bright when the projector is in stand-by mode. (pp.77-79)

③ **WARNING TEMP. indicator**
This indicator flashes red when internal projector temperature is too high. (pp.70, 77-79)

④ **WARNING FILTER indicator**
This indicator does not work in the default state. When a filter cartridge (supplied) has been installed in the projector, it works as follows:
–Blink slow when the filter is being scrolled. (pp.62, 77)
–Blink fast when the filter scroll is not working properly. (pp.62, 79)
–Light orange when the clogging of the filter is detected or the filter counter reaches a time set in the timer setting, urging immediate filter/ filter cartridge replacement. (pp.60-62, 79)

⑤ **SHUTTER indicator**
Light blue when the shutter is closed. (p77)

⑥ **LAMP 1 REPLACE indicator**
Turn orange when the life of the projection lamp1 draws to an end. (pp.66, 78)

⑦ **LAMP 2 REPLACE indicator**
Turn orange when the life of the projection lamp2 draws to an end. (pp.66, 78)

Remote Control

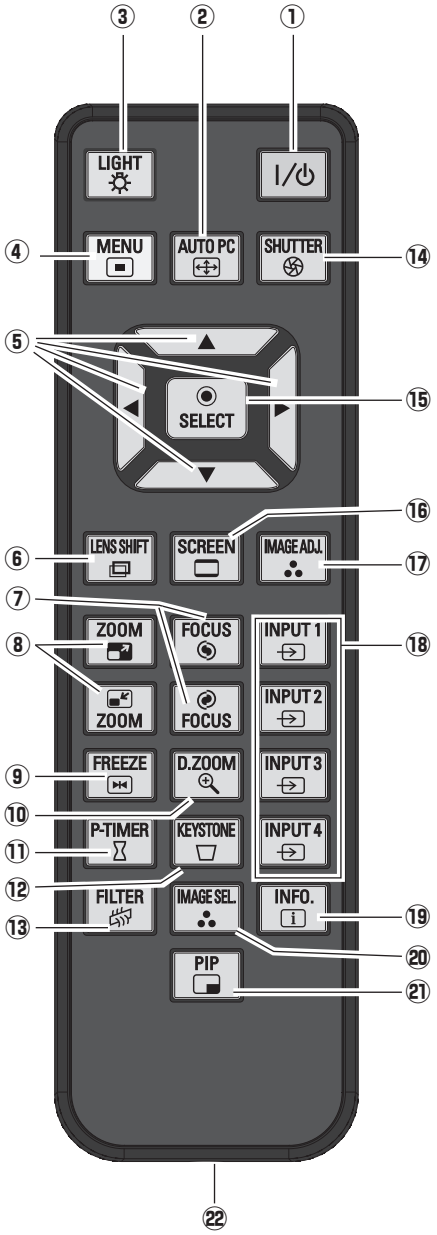

✔***Note:***

To ensure safe operation, observe the following precautions:

- *Do not bend, drop, or expose the remote control to moisture or heat.*
- *For cleaning, use a soft dry cloth. Do not apply benzene, thinner, spray, or any other chemical materials.*

① **ON/STAND-BY button**
Turn the projector on or off. (pp.24-25)

② **AUTO PC button**
Automatically adjust the computer image to its optimum setting. (pp.30, 36)

③ **LIGHT button**
Light the buttons on the remote control for about 10 seconds.

④ **MENU button**
Open or close the On-Screen MENU. (pp.26-27)

⑤ **POINT ▲▼ ◀▶ buttons**
–Select an item or adjust the value in the ON-SCREEN MENU. (p.26)
–Pan the image in DIGITAL ZOOM +/– mode. (p.41)

⑥ **LENS SHIFT button**
Select the LENS SHIFT function. (p.30)

⑦ **FOCUS buttons**
Adjust the focus. (p.30)

⑧ **ZOOM buttons**
Zoom in and out the images. (p.30)

⑨ **FREEZE button**
Freeze the picture on the screen. (p.30)

⑩ **D.ZOOM button**
Select the Digital zoom +/- mode and resize the image. (pp.30, 41)

⑪ **P-TIMER button**
Operate the P-TIMER function. (p.31)

⑫ **KEYSTONE button**
Correct keystone distortion. (pp.31, 41, 45)

⑬ **FILTER button**
This button does not work in the default state. (p.31)

⑭ **SHUTTER button**
Close the built-in shutter for light blocking. (pp.28, 31)

⑮ **SELECT button**
–Execute the selected item. (p.26)
–Expand or compress the image in the DIGITAL ZOOM mode. (p.41)

⑯ **SCREEN button**
Select the screen size. (pp.40-41, 44-45)

⑰ **IMAGE ADJ. button**
Enter the image level adjustment mode. (pp.31, 46-48)

⑱ **INPUT 1, 2, 3, 4 buttons**
Select an input source. (pp.32-34)

⑲ **INFO. button**
Display the input source information. (p.30)

⑳ **IMAGE SEL. button**
Select the image level. (pp.31, 39, 43)

㉑ **PIP button**
Operate the Picture In Picture function. (p.30)

㉒ **Wired Remote Jack**
Connect the remote control cable (not supplied) to this jack when using as a wired remote control.

Remote Control Battery Installation

1 Open the battery compartment lid.

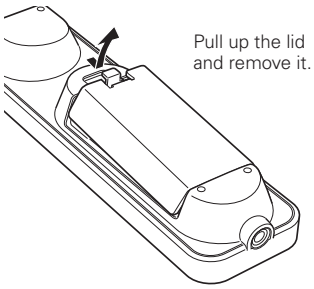

2 Install new batteries into the compartment.

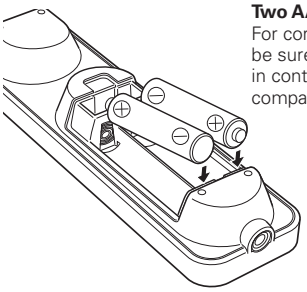

Two AA size batteries
For correct polarity (+ and –), be sure battery terminals are in contact with pins in the compartment.

3 Replace the compartment lid.

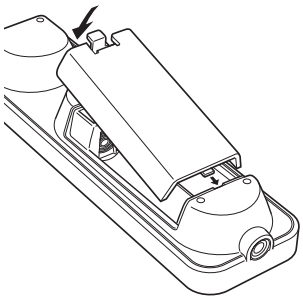

To ensure safe operation, please observe the following precautions :

- Use two (2) AA or LR6 type alkaline batteries.
- Always replace batteries in sets.
- Do not use a new battery with a used battery.
- Avoid contact with water or liquid.
- Do not expose the remote control to moisture or heat.
- Do not drop the remote control.
- If the battery has leaked on the remote control, carefully wipe the case clean and install new batteries.
- Risk of an explosion if battery is replaced by an incorrect type.
- Dispose of used batteries according to the instructions or your local disposal rule or guidelines.

Remote Control Receivers and Operating Range

Point the remote control toward the projector (to Infrared Remote Receivers) when pressing the buttons. Maximum operating range for the remote control is about 16.4′ (5 m) and 60 degrees from the front, rear or top of the projector.

Infrared Remote Receivers are provided in the front and back and on the top of the projector. You can conveniently use these receivers. (pp.10, 56)

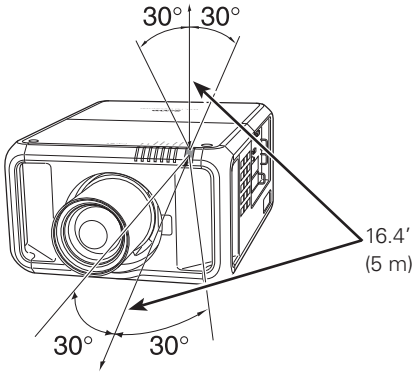

✔Note:

- *When hanging the projector from the ceiling, select the Infrared Remote Receiver which is located farther away from the fluorescent light. (p.56)*
- *When using the projector in the horizontal position without hanging from the ceiling, it is recommended to deactivate the top Infrared Remote Receiver to avoid the effects of the fluorescent light. (p.56)*

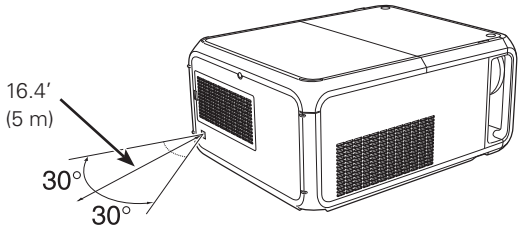

Wired Remote Control

The remote control can be used as a wired remote control. Wired remote control helps you use the remote control outside of the operating range (16.4′/ 5 m). Connect the remote control and the projector with the remote control cable (sold separately). Connected with the remote control cable, the remote control does not emit wireless signal.

Remote Control Code

The eight different remote control codes (Code 1–Code 8) are assigned to this projector. Switching the remote control codes prevents interference from other remote controls when several projectors or video equipment next to each other are operated at the same time. Change the remote control code for the projector first before changing that for the remote control. See “Remote control” in the Setting Menu on page 56.

1 Check the Reset Switch to "Use position" in the compartment lid on the back of the remote control.

2 While holding down the MENU button, press and release the IMAGE ADJ. button the number of corresponding times you would like to set the number of the remote control code for the projector.

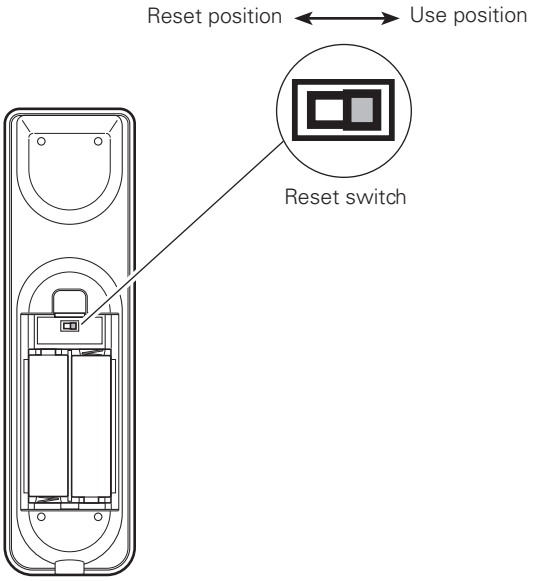

Remote Control Code	Number of Times Pressing IMAGE ADJ. button
Code 1	1
Code 2	2
Code 3	3
Code 4	4
Code 5	5
Code 6	6
Code 7	7
Code 8	8

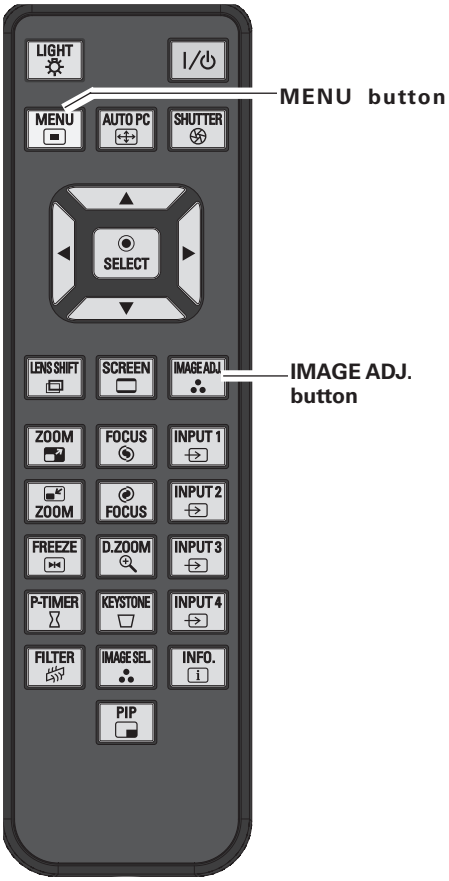

Lens Installation

Before setting up the projector, install Projection Lens on the projector.

Before installation, check where the projector is used and prepare a suitable lens. For the specifications of Projection Lens, contact sales dealer where you purchased the projector.

- Lens installation and replacement should be made by the qualified service personnel.

- When setting the projector after lens installation, be sure to replace a Lens Cap to protect a surface.

- When carrying or holding up the projector, be careful not to put your hands on lens part. It may damage lens, cabinet, or mechanical parts.

✔Note:

- *When the lens is not installed properly, 'Lens incorrectly fitted!' message appears on the screen.*

Positioning Projector

This projector is designed to project on a flat projection surface.

✔Note:

- *Brightness in room has a great influence on picture quality. It is recommended to limit ambient lighting in order to provide the best image.*

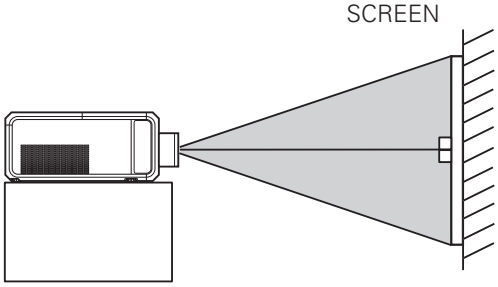

Picture Level and Pitch Adjustment

The projection angle is adjustable up to 5 degrees upward and downward respectively by rotating front and back feet.

To raise the projector, rotate the feet clockwise.

To lower the projector or to retract the adjustable feet, rotate the feet counterclockwise.

To correct keystone distortion, press the KEYSTONE button on the remote control or select Keystone from the menu (see pages 14, 31, 41, 45).

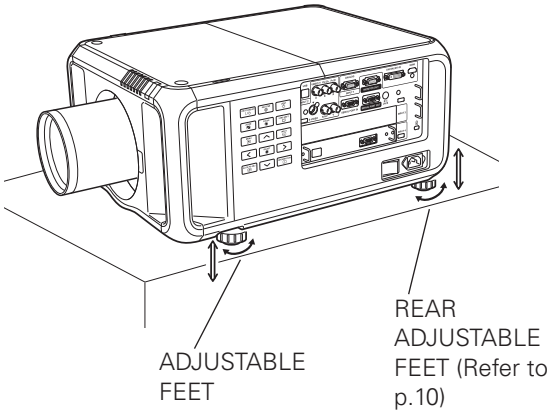

Lens Shift Adjustment

Projection lens can be moved from side to side and up and down with the motor-driven lens shift function. This function makes the positioning of images easy on the screen. (See page 28)

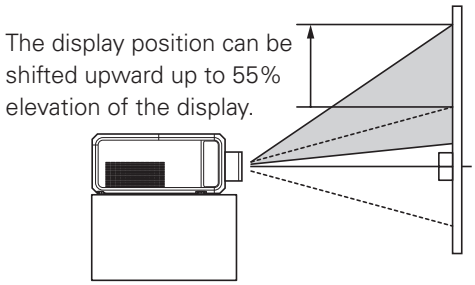

When the lens is shifted to top.

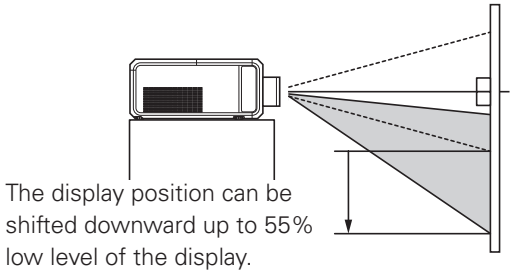

When the lens is shifted to bottom.

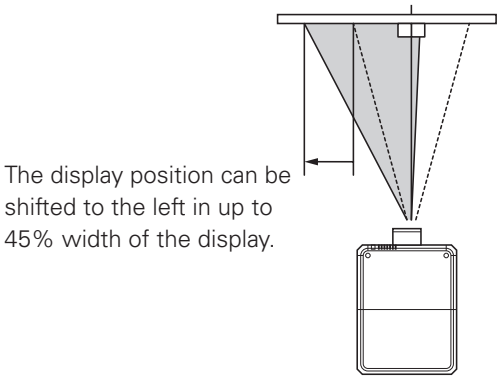

When the lens is shifted to leftmost.

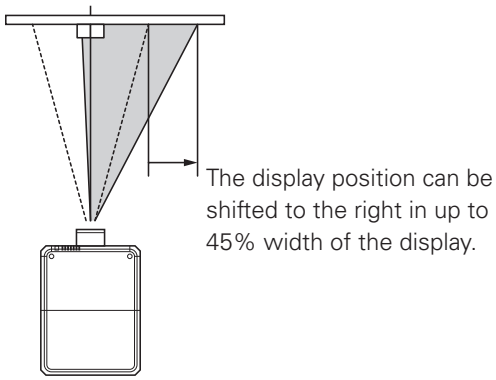

When the lens is shifted to rightmost.

Lens shift adjustable range

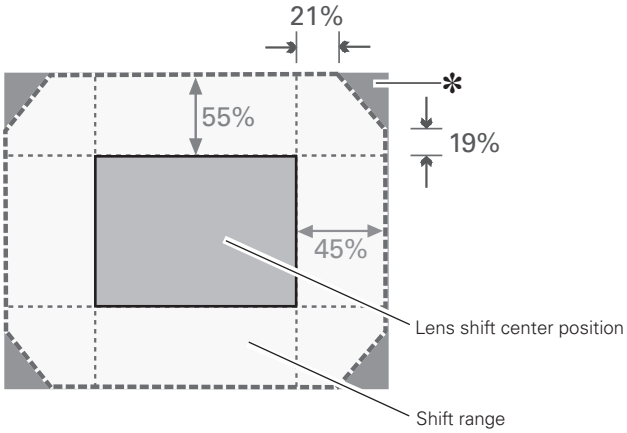

For optional lens 103-120104-01/103-119102-01/
103-121105-01/103-122106-01

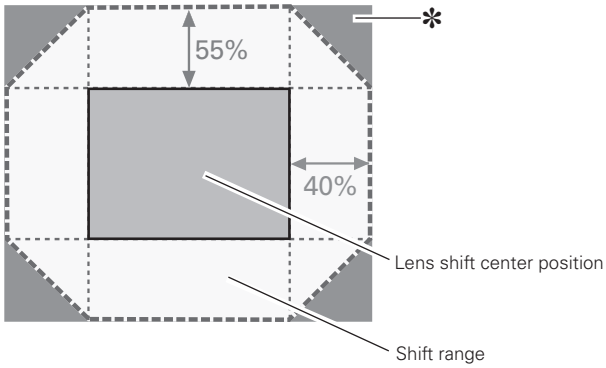

For optional lens 103-118101-01

✔***Note:***

✻ *When the lens is shifted beyond the described range of operation, the screen edges may become darker or the images may become out of focus.*

Terminals of Projector

The projector has two replaceable Interface board slots. The projector's functions can be extended by installing the optional interface boards into the terminal slots. 1 vacant slot (Input 3) is provided in your purchasing the projector. For the Optional Interface Boards, contact sales dealer where you purchased the projector.

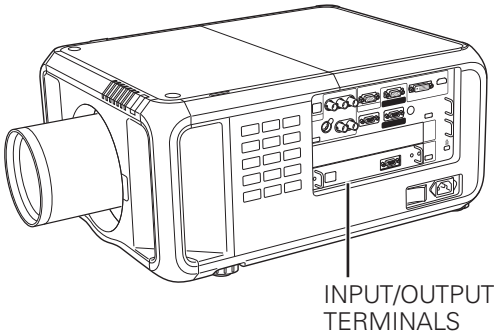

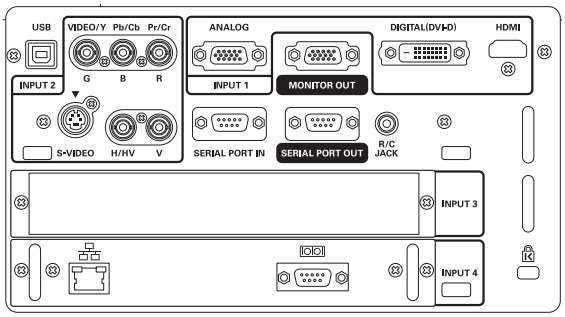

2 TERMINAL SLOTS (Factory set)

Replacement of Terminal

✔***Note:***

- *In the event of replacement of interface board, turn off the projector, press the Main On/Off Switch to Off and unplug the AC power cord from the AC outlet.*

1 Remove 2 Screws from an interface board.

2 Pull out the interface board.

3 Replace the interface board. Insert a new interface board along Guide to fit Plug into Socket.

4 Tighten screws to secure the interface board.

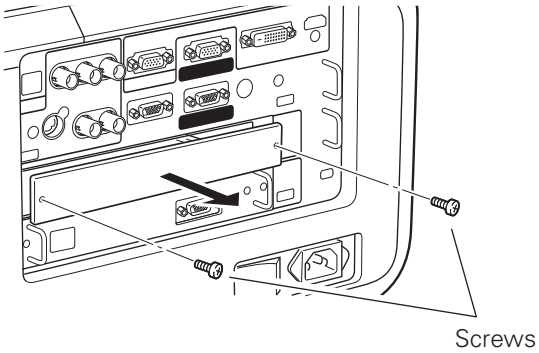

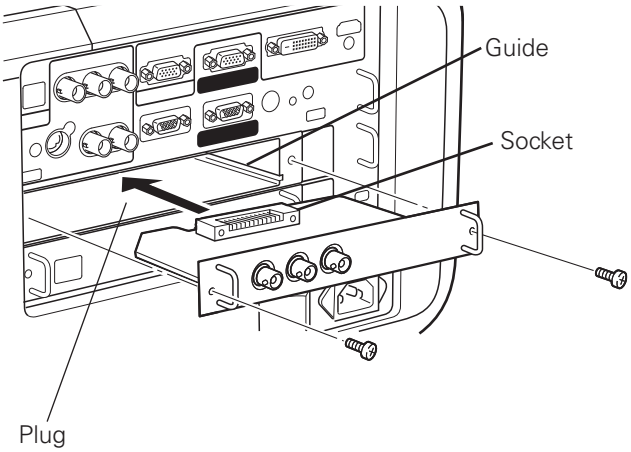

Figure shows Dual-SDI terminal.

NOTES ON ORDERING OR USING OPTIONAL INTERFACE BOARD

When ordering or using Optional Interface Board, contact your sales dealer. When contacting the sales dealer, tell the Option Control Number (Op.cont.No.) in the menu that is located on the bottom of the information menu.
(See page 29)

Connecting to Computer

Cables used for connection

- VGA Cable (D-sub 15 pin) *
- DVI Cable
- BNC Cable (BNC x 5)

(*One cable is supplied; Other cables are not supplied with this projector.)

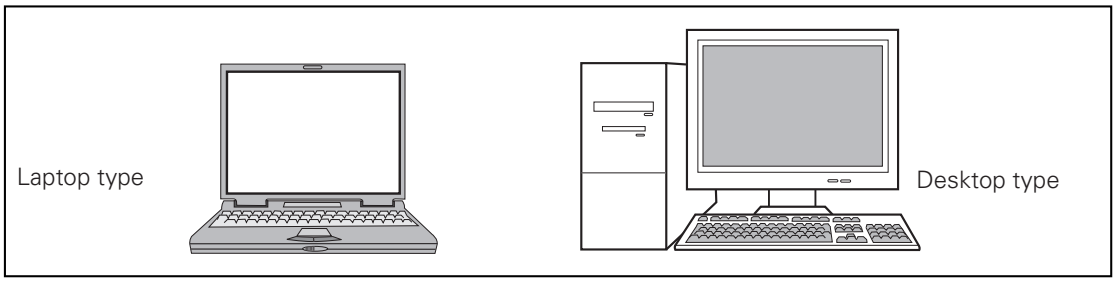

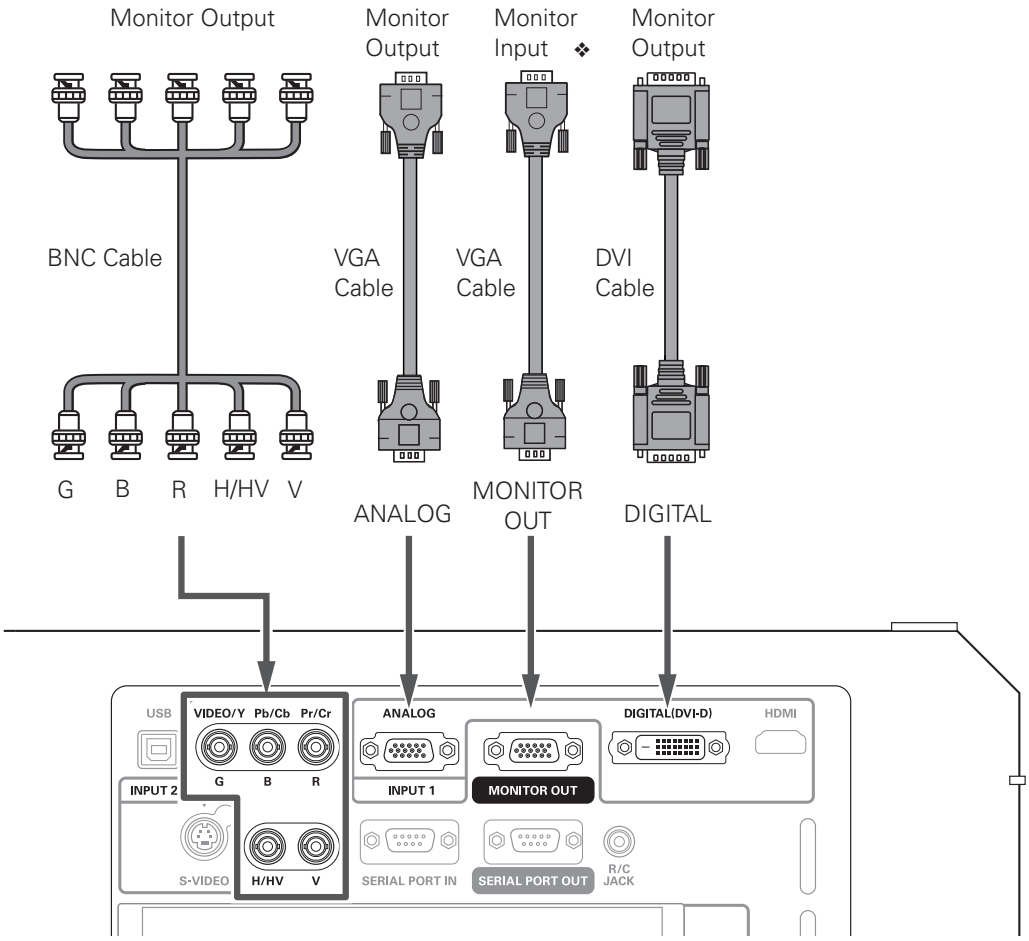

Terminals of the projector

Unplug the power cords of both the projector and external equipment from the AC outlet before connecting cables.

❖ See the next page for the signals that can output to the MONITOR OUT terminal.

Connecting to Video Equipment

Cables used for connection

- Video Cable (BNC x 3, BNC x 1)
- SCART-VGA Cable
- DVI Cable
- S-Video Cable
- HDMI Cable

(Cables are not supplied with the projector.)

Monitor Out Signal Table

Input Terminal			Monitor Out	Cable
Input 1	D-sub15	RGB (PC analog)	YES	
		RGB (SCART)	NO	
	DVI-D	RGB (PC digital)	NO	
		RGB (AV HDCP)	NO	
	HDMI	HDMI	NO	
Input 2	5BNC	RGB	YES	
		Video	YES	*
		Y-Pb/Cb-Pr/Cr	YES	*
	S-video	S-video	NO	

*
A cable with one end D-sub 15 and the other end (Black box) compatible with each equipment is necessary.

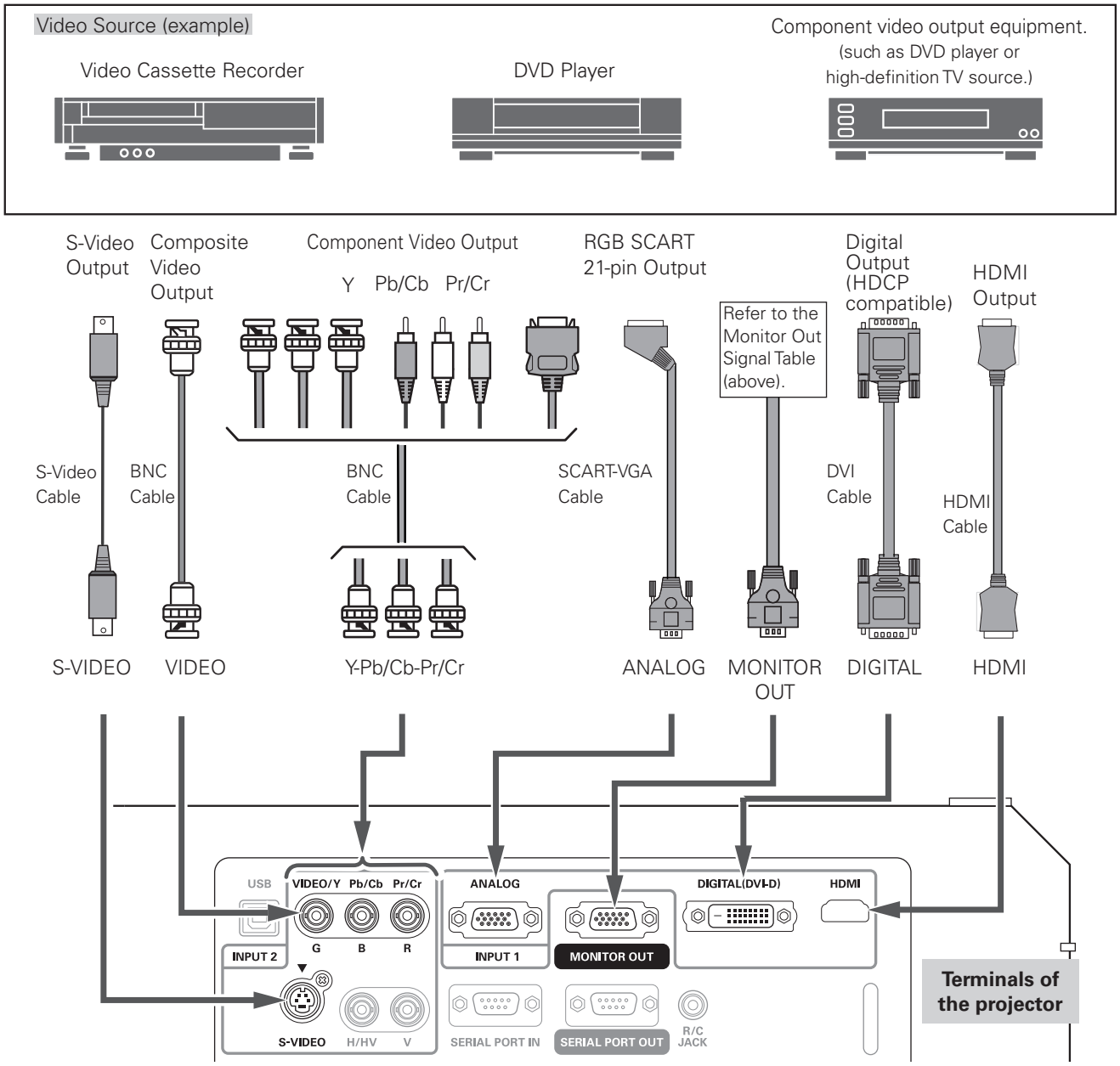

Unplug the power cords of both the projector and external equipment from the AC outlet before connecting cables.

Attaching the Cable Cover

It is recommended to attach the cable covers to protect the terminal area from dust when hanging the projector from the ceiling. Please connect the covers to the projector with the provided straps to prevent the covers from falling off.

Follow these steps to attach the support cover and cable cover.

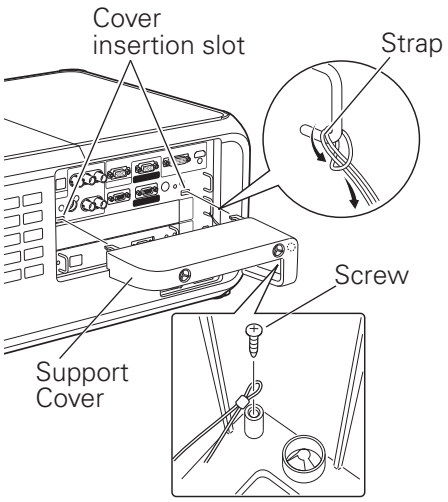

1 Tie a strap (supplied) to the lower bracket on the right side of the projector's terminal area. (See the right figure.)

2 Fix the opposite end of the strap to the hole inside the support cover with a screw (supplied).

3 Insert the support cover into the cover insertion slot and slide it to the left.

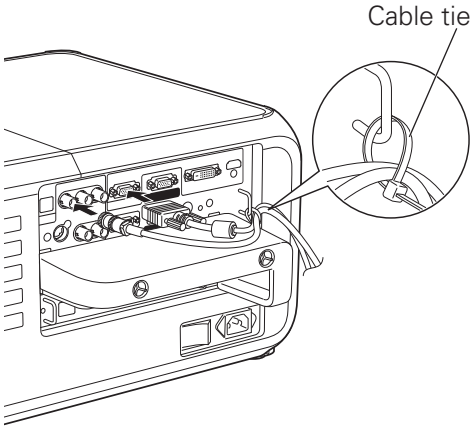

4 Dress and secure all cables to a cable tie (supplied). The cable tie is reusable and can be opened and closed as many times as needed.

5 Tie another strap (supplied) to the upper bracket on the right side of the projector's terminal area.

6 Fix the opposite end of the strap to the hole inside the cover with a screw (supplied).

7 To attach the cover, insert the rods inside the cover into the holes on the side cover until it clicks. (See the right figure.)

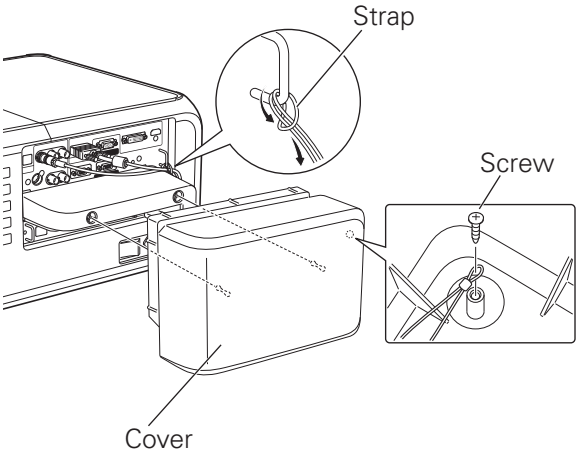

✔***Note:***

- *Attach the support cover first, otherwise the cover cannot be fixed properly.*

Connecting the AC Power Cord

This projector uses nominal input voltages of 100-120 or 200–240 V AC. It is designed to work with single-phase power systems having a grounded neutral conductor. To reduce the risk of electrical shock, do not plug into any other type of power system.
If you are not sure of the type of power being supplied, consult your authorized dealer or service station.
Connect the projector with all peripheral equipment before turning on the projector.

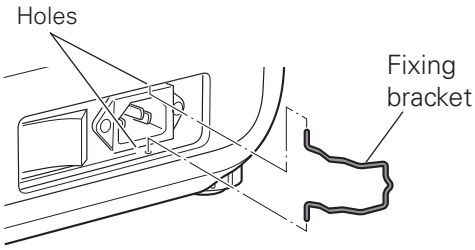

2 types of fixing brackets are provided to prevent the AC power cord from coming loose. Confirm your AC plug type with the chart below and use the proper type of fixing bracket.
Follow these steps to attach the fixing bracket and connect the AC power cord to the projector.

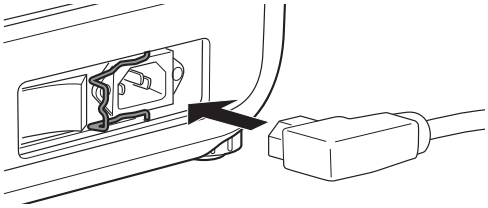

1. Fit a fixing bracket in each hole.
2. Connect the AC power cord to the projector.
3. Turn the fixing bracket to lock the AC power cord in place. (See the right figure.)

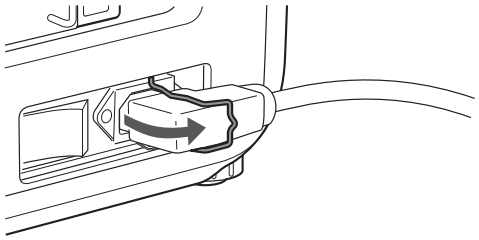

✔***Note:***
- *Unplug the AC power cord or turn off the MAIN ON/OFF Switch when the projector is not in use. When the projector is in stand-by mode, it consumes a little electric power.*

CAUTION

The AC outlet must be near this equipment and must be easily accessible.

NOTE ON THE POWER CORD

AC power cord must meet the requirements of the country where you use the projector.
Confirm the AC plug type with the chart below and proper AC power cord must be used.
If the supplied AC power cord does not match your AC outlet, contact your sales dealer.

AC Outlet side	Projector side	Fixing Bracket
For the U.S.A. and Canada Ground To the AC Outlet. **(120 V AC)**	To POWER CORD CONNECTOR on your projector.	Part No. 610 342 7744 (Narrow)
For Continental Europe To the AC Outlet. **(200–240 V AC)**	To POWER CORD CONNECTOR on your projector.	Part No. 610 342 7751 (Wide)

Turning On the Projector

1 Complete peripheral connections (with a computer, VCR, etc.) before turning on the projector.

2 Connect the projector's AC power cord into an AC outlet and turn on the MAIN ON/OFF Switch. The LAMP indicator lights red and the POWER indicator lights green.

3 Press the ON/STAND-BY button on the side control or on the remote control. The LAMP indicator dims red and the cooling fans start to operate. The preparation display appears on the screen and the countdown starts.

4 After the countdown, the input source that was selected the last time and the Lamp status icon (see page 65) appear on the screen.

If the projector is locked with a PIN code, PIN code Input Dialog Box will appear. Enter the PIN code as instructed below.

Enter a PIN code

Use the Point ▲▼ buttons on the side control or on the remote control to enter a number. Press the Point ▶ button to fix the number and move the red frame pointer to the next box. The number changes to "✳." Repeat this step to complete entering a four-digit number. After entering the four-digit number, move the pointer to "Set." Press the SELECT button so that you can start to operate the projector.

If you fixed an incorrect number, use the Point ◀ button to move the pointer to the number you want to correct, and then enter the correct number.

If you entered an incorrect PIN code, "PIN code" and the number (✳✳✳✳) will turn red for a moment. Enter the correct PIN code all over again.

What is PIN code?

PIN (Personal Identification Number) code is a security code that allows the person who knows it to operate the projector. Setting a PIN code prevents unauthorized use of the projector.

A PIN code consists of a four-digit number. Refer to the PIN code lock function in the Setting Menu on pages 58-59 for locking operation of the projector with your PIN code.

CAUTION ON HANDLING PIN CODE

If you forget your PIN code, the projector can no longer be started. Take special care in setting a new PIN code; write down the number in a column on page 86 of this manual and keep it on hand. Should the PIN code be missing or forgotten, consult your dealer or service center.

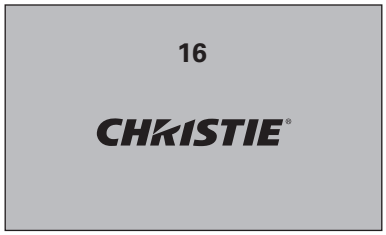

The preparation display will disappear after 20 seconds.

Selected Input Source and Lamp control

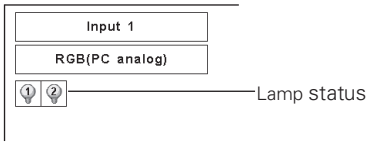

See page 65 for the Lamp mode status

✔Note:

- *The Lamp replacement icon may appear on the screen depending on the usage state of the projector.*
- *If the filter cartridge is not installed in the projector, the Warning Filter indicator does not light up and the Filter warning icon does not appear.*

PIN code Input Dialog Box

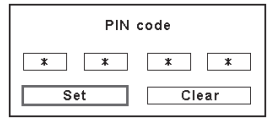

After the OK icon disappears, you can operate the projector.

✔Note:

- *When the Logo select function is set to "Off," the logo will not be shown on the screen (p.54).*
- *When the "Countdown off" or "Off" is selected in the Display function, the countdown will not be shown on the screen (p.49).*
- *During the countdown period, all operations except for Zoom, Focus, and Lens-shift functions are invalid. If the projector has been locked with a PIN code, however, Zoom, Focus, and Lens-shift functions are also invalid.*
- *If you press the ON/STAND-BY button on the side control or the remote control during the countdown period, you can skip the countdown and go to the normal operations.*
- *If the PIN code number is not entered within three minutes after the PIN code dialog box appeared, the projector will be turned off automatically.*
- *The "1234" is set as the initial PIN code at the factory.*

Turning Off the Projector

1 Press the ON/STAND-BY button on the side control or on the remote control, and "Power off?" appears on the screen.

2 Press the ON/STAND-BY button on the side control or on the remote control again to turn off the projector. The LAMP indicator lights bright and the POWER indicator turns off. After the projector is turned off, the cooling fans operate. You cannot turn on the projector during this cooling down period.

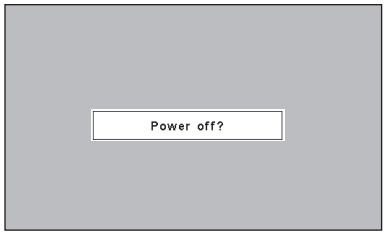

"Power off?" disappears after 4 seconds.

3 When the projector has cooled down enough, the POWER indicator lights green and then you can turn on the projector. To turn off the MAIN ON/OFF Switch, wait until the projector is completely cooled down.

4 Unplug the AC power cord from the AC outlet.

TO MAINTAIN THE LIFE OF THE LAMP, ONCE YOU TURN THE PROJECTOR ON, WAIT AT LEAST FIVE MINUTES BEFORE TURNING IT OFF.
DO NOT UNPLUG THE AC POWER CORD WHILE COOLING FANS ARE RUNNING OR BEFORE THE POWER INDICATOR LIGHTS GREEN AGAIN.
OTHERWISE IT WILL RESULT IN SHORTENING OF THE LAMP LIFE.

✔ ***Note:***

- *When the On start function is set to "On," the projector will be turned on automatically by connecting the AC power cord to an AC outlet (p.57).*
- *The running speed of cooling fans is changed according to the temperature inside the projector.*
- *Do not put the projector in a case before the projector is cooled enough.*
- *If the WARNING TEMP. indicator blinks red, see "Warning Indicators" on page 70.*
- *The projector cannot be turned on during the cooling period with the POWER indicator turned off. You can turn it on again after the POWER indicator becomes green again.*

How to Operate the On-Screen Menu

The projector can be adjusted or set via the On-Screen Menu. For each adjustment and setting procedure, refer to the respective sections in this manual.

1 Press the MENU button on the side control or the remote control to display the On-Screen Menu.

2 Use the Point ◀▶ buttons to select a Menu icon. Use the Point ▲▼ buttons to select an item in the selected menu.

3 Press the SELECT button to show the item data. Use the Point ◀▶ buttons to adjust the values.

To close the On-Screen Menu, press the MENU button again.

✔***Note:***
- *The selected item is not active until the SELECT button is pressed.*

Side Control

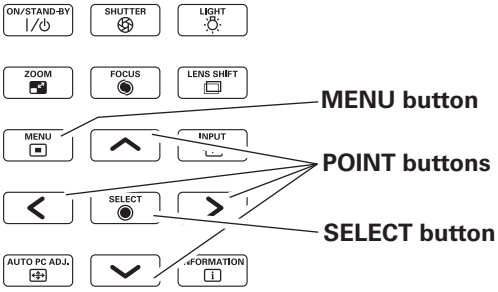

Remote Control

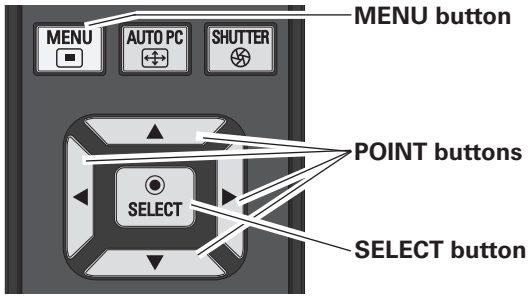

On-Screen Menu

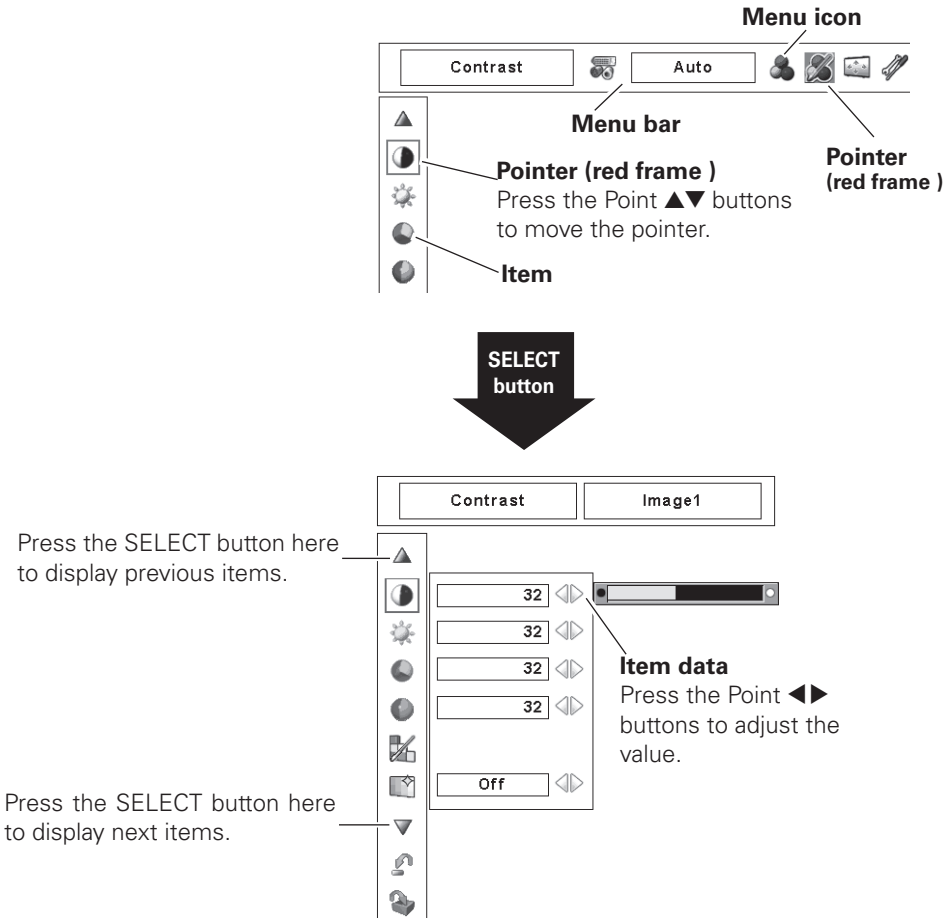

Menu Bar

For detailed functions of each menu, see "Menu Tree" on pages 74-76.

For Computer Source

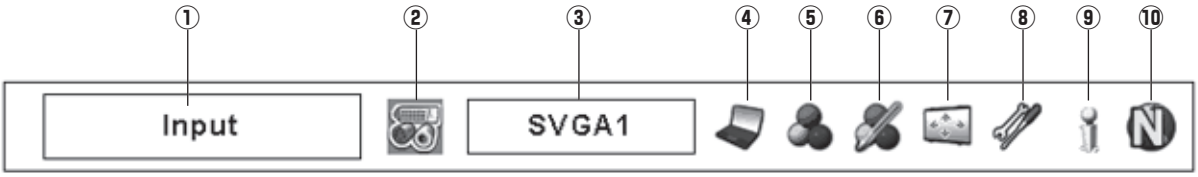

① Guide Window

Show the selected Menu of the On-Screen Menu.

② Input Menu

Used to select an input source Computer or Video (pp.32-34).

③ PC System Menu

Used to select computer system (p.35).

④ PC Adjust Menu

Used to adjust the parameters to match with the input signal format (pp.36-38).

⑤ Image Select Menu

Used to select an image level among Standard, Real, Dynamic, DICOM, and Image 1–10 (p.39).

⑥ Image Adjust Menu

Used to adjust the computer image. [Contrast/ Brightness/ Color management/Auto picture control/BrilliantColor/Color temp./White balance (R/G/B)/Offset (R/G/B)/Sharpness/ Gamma/Reset/Store] (pp.46-48).

⑦ Screen Menu

Used to adjust the size of the image. [Normal/True/Wide/ Full screen/Custom/Digital zoom +/–/Keystone/Ceiling/Rear/ Reset/] (pp.40-41).

⑧ Setting Menu

Used to set the projector's operating configurations (pp.49-61).

⑨ Information Menu

Display the input source information (p.29).

⑩ Network Menu

See the owner's manual of the Network Board.

For Video Source

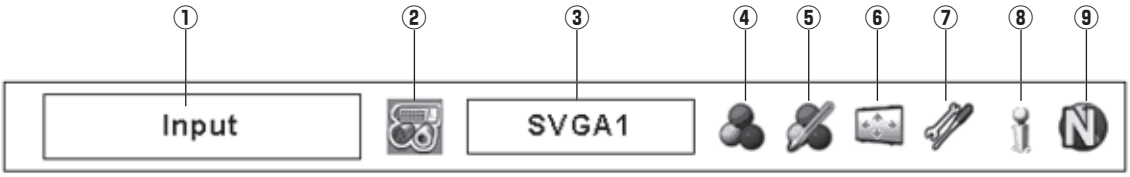

① Guide Window

Show the selected Menu of the On-Screen Menu.

② Input Menu

Used to select an input source Computer or Video (pp.32-34).

③ AV System Menu

Used to select the system of selected video source (p.42).

④ Image Select Menu

Used to select an image level among Standard, Cinema, Dynamic, DICOM, and Image 1–10 (p.43).

⑤ Image Adjust Menu

Used to adjust the picture image. [Contrast/Brightness/ Color/Tint/Color management/Auto picture control/ BrilliantColor/Color temp./White balance (R/G/B)/ Offset (R/ G/B)/Sharpness/Gamma/Noise reduction/Progressive/Reset/ Store] (pp.46-48).

⑥ Screen Menu

Used to adjust the size of the image. [Normal/Wide/ Custom/Keystone/Ceiling/Rear/Reset] (pp.44-45).

⑦ Setting Menu

Used to set the projector's operating configurations (pp.49-61).

⑧ Information Menu

Display the input source information (p.29).

⑨ Network Menu

See the owner's manual of the Network Board.

Operating with Projector Control

Zoom Adjustment

Display "Zoom" on the screen. Press the ZOOM button and then press the point ▲▼ buttons to zoom in and out the image.

Focus Adjustment

Display "Focus" on the screen. Press the FOCUS button and then press the point ▲▼ buttons to adjust the focus of the image.

Lens Shift Adjustment

Display "Lens shift" on the screen. Use the Point ▲▼◀▶ buttons to position the screen to the desired point without having picture distortion.
The screen can be moved up or down to 55 percent, or sideways up to 45 percent from the central axis of the lens shift. Press and hold the LENS SHIFT button for more than 5 seconds to return to the central position. See page 18 for details.

Auto PC Adjustment

Operate the Auto PC Adj. function. The computer screen adjustment can be done easily by pressing this button. See page 36 for details.

Light Function

Light function is used to turn on the lights on the side control and around terminals. To turn off the lights, press the Light button again.

✔Note:

- *The buttons on the side control except for the LIGHT button and ON/STAND-BY button do not light up when the projector is in stand-by mode or during the cooling down period.*

Shutter Function

Shutter function allows you to completely block out light to the screen. Press the SHUTTER button to close the shutter inside the projector. To open up the shutter, press the SHUTTER button again. Refer to p.60 for detail of setting for the Shutter function.

✔Note:

- *The SHUTTER button on the side control and the remote control cannot be effective when Shutter Protection is "On" in the Setting menu. (p.60)*
- *The SHUTTER indicator on the projector's top lights blue when the shutter is closed. (pp.13, 77)*
- *The projector will shut down automatically when the set time on Shutter management has passed. (p.60)*
- *The Power management function does not work when the shutter is closed. (p.57)*

Side Control

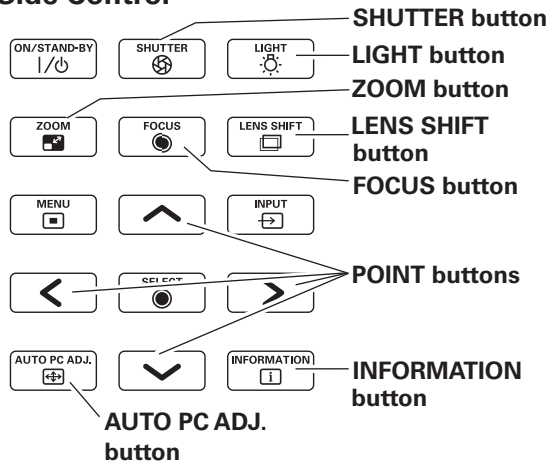

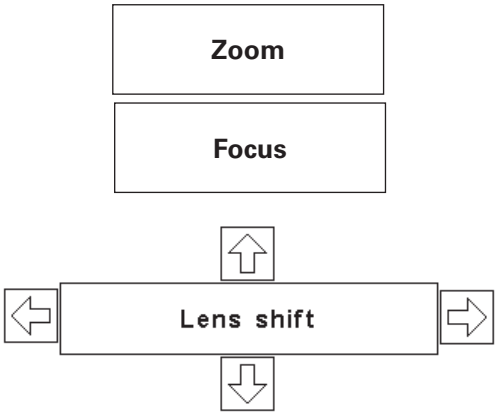

✔Note:

- *The arrow disappears at the maximum lens shift in each direction.*
- *The arrow turns red when the lens shift comes to the center position of the screen.*

Information

Information display can be used to confirm the current operating condition of the projector and the signal being projected through the projector.

Press the INFORMATION button to display the information window on the screen. Press the Point ▼ button or the INFORMATION button again to display the next page. To hide the information window, press the INFORMATION button again or Point ◀▶ buttons.

The information window can also be selected from the menu.

Information Menu

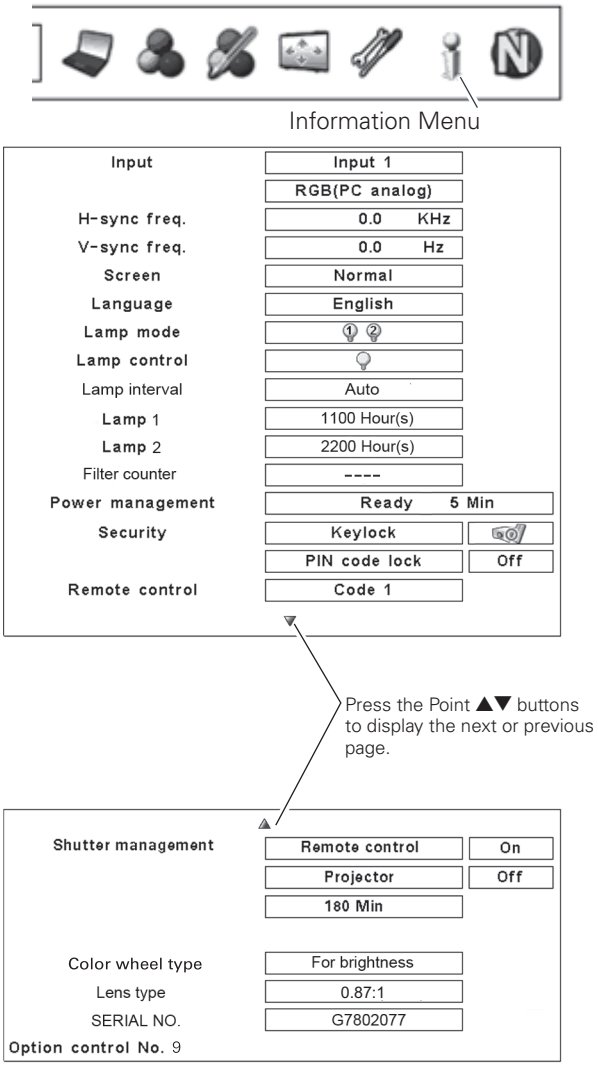

✔ ***Note:***

- *The H- and V-sync freq. values described in this figure may be different from the actual values.*
- *SERIAL NO. is used to service the projector.*
- *When the lamp life reaches a recommended lamp replacement time, the time shown in Lamp1 or Lamp2 turns red.*
- *The total accumulated time of the filter use is shown in the Filter counter. When the filter counter reaches the value set in the filter timer setting, the time shown in the Filter counter turns red.*
- *If the filter cartridge is not installed in the projector, '----' is shown in the Filter counter.*

Operating with Remote Control

Using the remote control for some frequently used operations is advisable. Just pressing one of the buttons enables you to make the desired operation quickly without calling up the On-Screen Menu.

AUTO PC button

Press the AUTO PC button on the remote control to operate the Auto PC Adj. function. The computer screen adjustment can be done easily by pressing this button. See page 36 for details.

LENS SHIFT button

See page 28 for details.

ZOOM buttons

Press the ZOOM buttons on the remote control to zoom in and out the image. See page 28 for details.

FOCUS buttons

Press the FOCUS buttons on the remote control to adjust focus of the image. See page 28 for details.

FREEZE button

Press the FREEZE button on the remote control to freeze the picture on the screen. To cancel the FREEZE function, press the FREEZE button again or press any other button.

SCREEN button

Press the SCREEN button on the remote control to select the desired screen size. The selected screen size mode appears on the screen for 4 seconds. See pages 40 to 41 and 44 to 45 for details.
Press and hold the SCREEN button for more than 5 seconds to return all the screen size adjustment setting to the factory default setting.

D.ZOOM button

Press the D.ZOOM button on the remote control to enter to the Digital zoom +/– mode. See page 41 for details.

INFO. button

Press the INFO. button on the remote control to display the information window on the screen. See the previous page for details.

PIP button

Press the PIP button on the remote control several times until the desired mode of Picture in Picture appears. Press and hold the PIP button for more than 3 seconds to display the setting dialog box of Picture in Picture. See page 51 for details of Picture in Picture function.

Remote Control

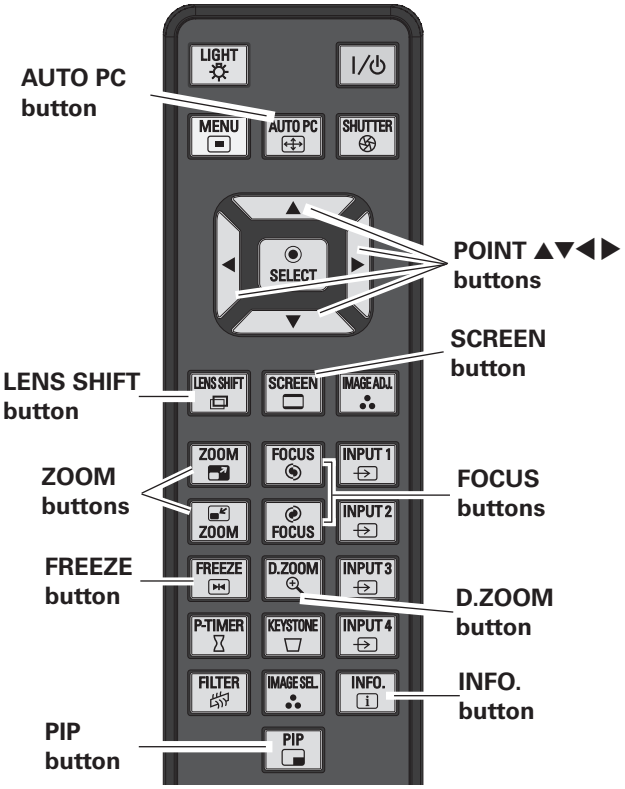

✔ ***Note:***
- *See the next page for the description of other buttons.*

User 1 mode of PIP (example)

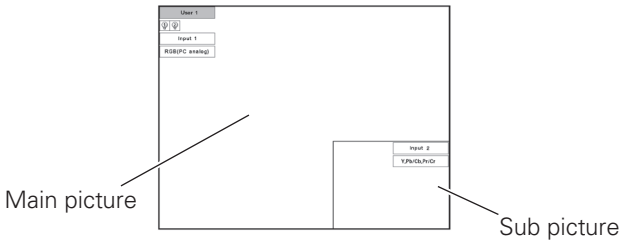

User 2 mode of PIP (example)

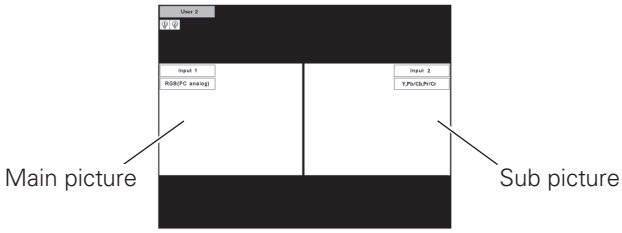

SHUTTER button

See page 28 for details.

FILTER button

This button does not work in the default state. When a filter cartridge (supplied) has been installed in the projector, it works as follows:
Press and hold the FILTER button for more than five seconds to replace the filter mechanically. See page 56 for details.

✔ ***Note:***
- *The filter cannot be rewound.*
- *When the filter is replaced, the total accumulated time of the filter use is automatically set to 0.*

IMAGE ADJ. button

Press the IMAGE ADJ. button on the remote control to adjust a image level of the screen.
For more detail, see pp.46-48.

IMAGE SEL. button

Press the IMAGE SEL. button on the remote control to select a desired image level of the screen.
For more detail, see pp.39, 43.

P-TIMER button

Press the P-TIMER button on the remote control. The Timer display "00 : 00" appears on the screen and starts to count time (00 : 00–59 : 59).
To stop the P-TIMER, press the P-TIMER button.
To cancel the P-TIMER, press the P-TIMER button again.

KEYSTONE button

Press the KEYSTONE button on the remote control. The "Keystone" appears on the screen.

Use the Point ▲▼◀▶ buttons to correct keystone distortion. The keystone adjustment can be stored (pp.41, 45).

Remote Control

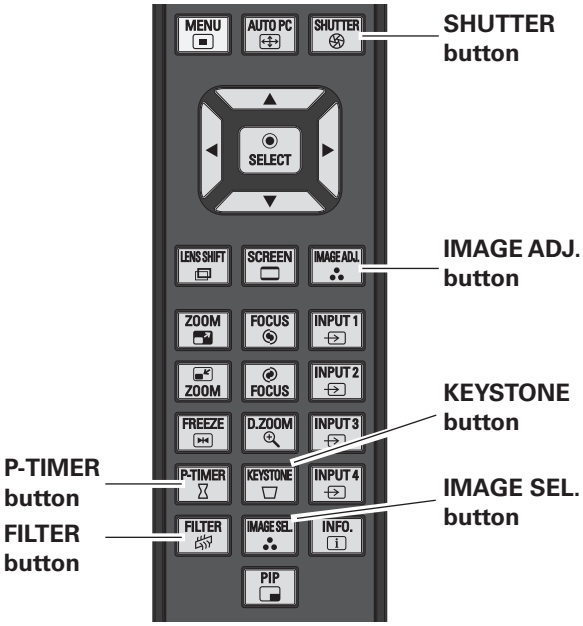

✔ ***Note:***
- *See the previous page for the description of other buttons.*

P-Timer display

- The white arrows indicate that there is no correction.
- A red arrow indicates the direction of correction.
- An arrow disappears at the maximum correction.
- If you press the KEYSTONE button on the remote control again while the Keystone dialog box is being displayed, the keystone adjustment will be canceled.
- The adjustable range can be limited depending on the input signal.
- "Keystone" disappears after 10 seconds.

Reduce the upper width with Point ▲ button.

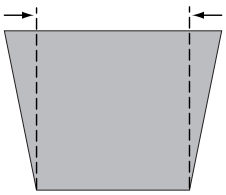

Reduce the lower width with Point ▼ button.

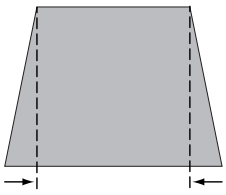

Reduce the left part with Point ◀ button.

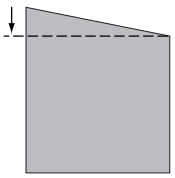

Reduce the right part with Point ▶ button.

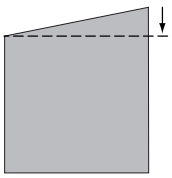

Input

Side Control

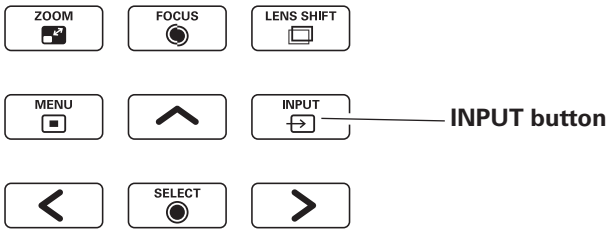

Side Control Operation

Press the INPUT button on the side control. It switches to INPUT 1, INPUT 2, INPUT 3 and INPUT 4 as you press the INPUT button.

Before using the INPUT button on the side control, you must select a correct input source by On-Screen Menu and the latest input source will be displayed.

Remote Control

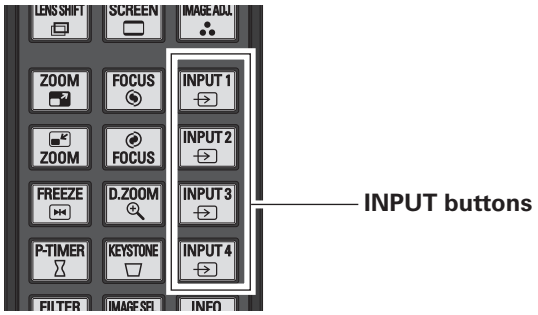

Remote Control Operation

Press the INPUT 1, INPUT 2, INPUT 3 or INPUT 4 button on the remote control. The input source appears on the screen as you press each button. Select the connected input source.

✔ ***Note:***
- *Empty slots cannot be selected.*
- *When a slot is empty, the input is displayed in grayout.*

Side Control button operation

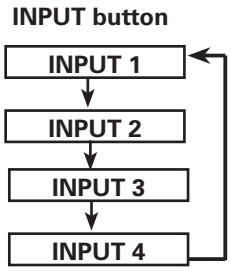

Remote Control button operation

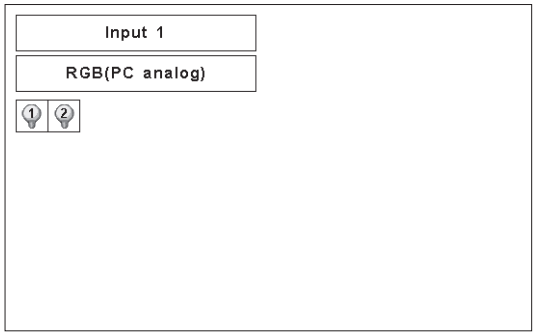

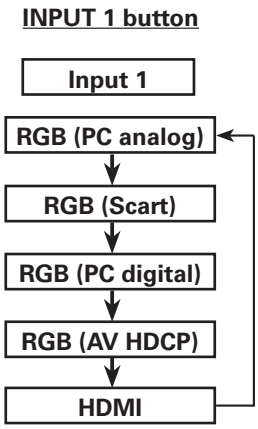

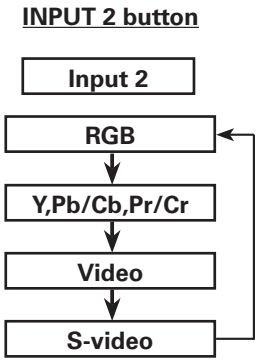

Computer Input Source Selection

Menu Operation

When Selecting the INPUT 1 with DVI/D-sub 15 terminals

1 Press the MENU button to display the On-Screen Menu. Use the Point ◀▶ buttons to move the red frame pointer to the INPUT Menu icon.

2 Use the Point ▲▼ buttons to move the red arrow pointer to the desired input and then press the SELECT button. Then you can switch to the desired input.

3 Press the select button again. The Source Select Menu appears.

4 Use the Point ▲▼ buttons to select the desired source and then press the SELECT button.

INPUT MENU

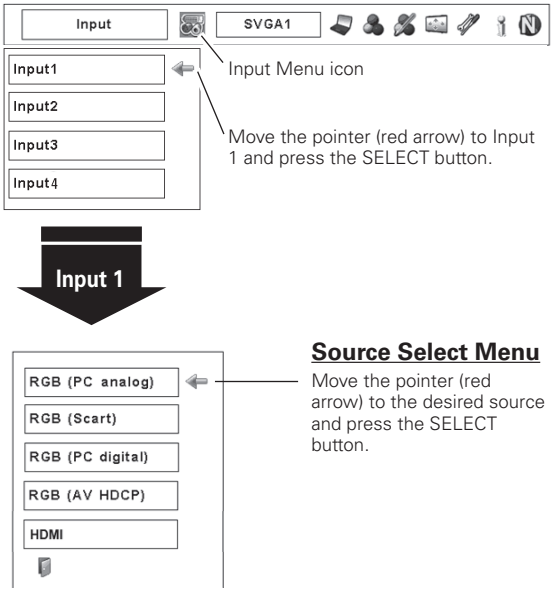

RGB (PC analog)

When your computer is connected to the INPUT 1 (ANALOG) terminal, select RGB (PC analog).

RGB (PC digital)

When your computer is connected to INPUT 1 (DIGITAL) terminal, select RGB (PC digital).

When Selecting the INPUT 2 with 5-BNC/Video/S-video terminals

INPUT MENU

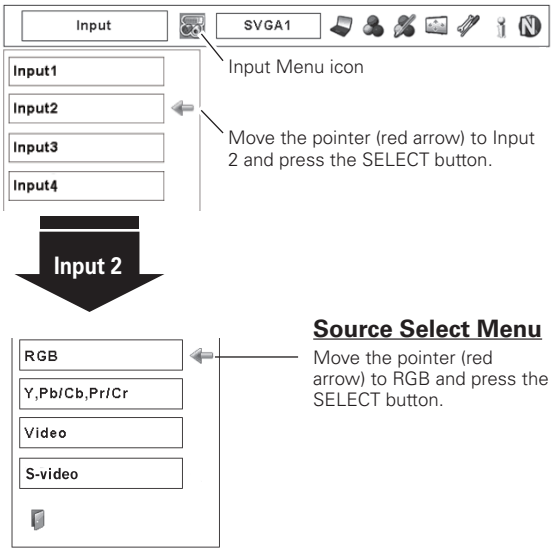

RGB

When your computer is connected to the INPUT 2 (5 BNC INPUT JACKS) terminal, select RGB.

✔***Note:***

•*When a slot is empty, the input is displayed in grayout.*

Video Input Source Selection

Menu Operation

When Selecting the INPUT 1 with DVI/D-sub 15 terminals

When connecting to video equipment, select the type of Video source in the Source Select Menu.

RGB (Scart)

When scart video equipment is connected to the INPUT 1 (ANALOG) terminal, select RGB (Scart).

RGB (AV HDCP)

If the HDCP-compatible signal source is connected to the INPUT 1 (DIGITAL) terminal, select RGB (AV HDCP).

HDMI

When the video signal is connected to the HDMI terminal, select HDMI.

INPUT MENU

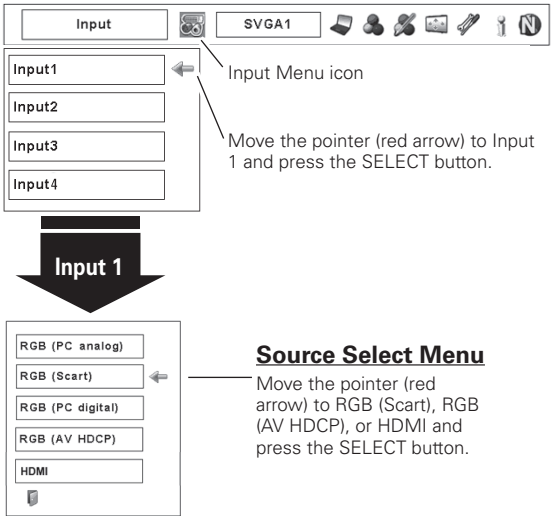

When Selecting the INPUT 2 with 5-BNC/Video/S-video terminals

When connecting to video equipment, select the type of Video source in the Source Select Menu.

Y, Pb/Cb, Pr/Cr

When the video input signal is connected to the Y-Pb/Cb-Pr/Cr jacks, select Y, Pb/Cb, Pr/Cr.

Video

When the video input signal is connected to the VIDEO jack, select Video.

S-video

When the video input signal is connected to the S-VIDEO jack, select S-video.

INPUT MENU

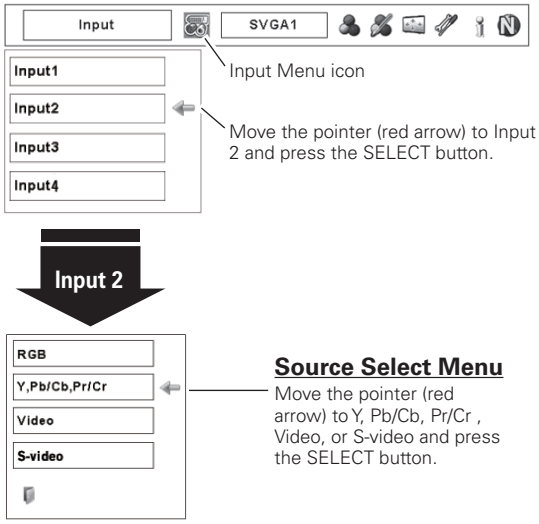

✔ ***Note:***

- *HDCP (High-bandwidth Digital Content Protection) is a system for protecting digital entertainment content which is delivered by DVI (Digital Visual Interface) from being copied. The specification of HDCP is decided and controlled by Digital Content Protection, LLC. Should the specification be changed, this projector may not display the digital content protected by HDCP.*
- *When a slot is empty, the input is displayed in grayout.*

Computer System Selection

Automatic Multi-Scan System

This projector automatically tunes to various types of computers based on VGA, SVGA, XGA, SXGA, SXGA+, WXGA, UXGA, or WUXGA (refer to "Compatible Computer Specifications" on pages 80-81). If a computer is selected as a signal source, this projector automatically detects the signal format and tunes to project a proper image without any additional settings. (Some computers need to be set manually.)

One of the following messages may appear when:

Auto The projector cannot recognize the connected signal conforming to the provided PC Systems. The "Auto" is displayed on the PC System Menu icon and the Auto PC Adjustment function works to display proper images. If the image is not projected properly, a manual adjustment is required. (pp.37–38.)

----- There is no signal input from the computer. Check the connection between your computer and the projector. (See "Troubleshooting" on page 71.)

Mode 1 The preset system is manually adjusted in the PC Adjust Menu. The adjusted data can be stored in the Mode 1–10. (pp.37-38)

SVGA 1 PC systems provided in this projector is chosen. The projector chooses a proper system provided in the projector and displays it.

✻ Mode 1 and SVGA 1 are examples.

PC SYSTEM MENU

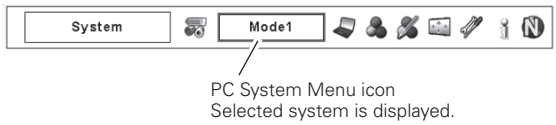

Selecting Computer System Manually

PC system can also be selected manually.

1 Press the MENU button to display the On-Screen Menu. Use the Point ◀▶ buttons to move the red frame pointer to the PC System Menu icon.

2 Use the Point ▲▼ buttons to move the red arrow pointer to the desired system, and then press SELECT button.

PC SYSTEM MENU

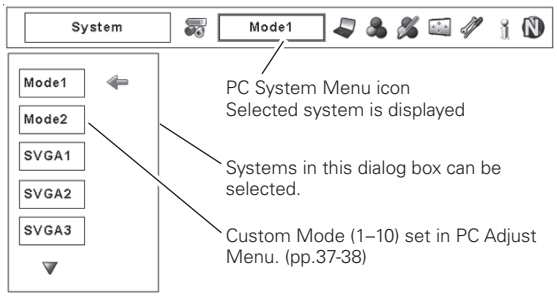

Auto PC Adjustment

Auto PC Adjustment function is provided to automatically adjust Fine sync, Total dots, Horizontal and Vertical positions to conform to your computer.

Direct Operation

The Auto PC adjustment function can be operated directly by pressing the AUTO PC button on the remote control or the AUTO PC ADJ. button on the side control.

Remote Control

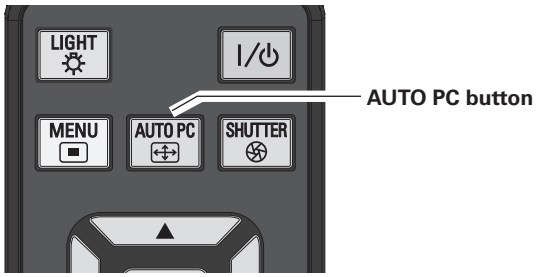

Side Control

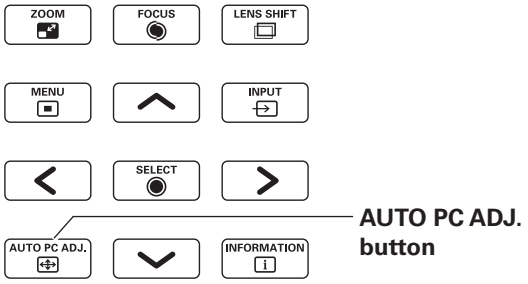

Menu Operation

Auto PC adj.

1 Press the MENU button to display the On-Screen Menu. Use the Point ◀▶ buttons to move the red frame pointer to the PC Adjust Menu icon.

2 Use the Point ▲▼ buttons to move the red frame pointer to the AUTO PC adj. icon and then press the SELECT button twice.

PC ADJUST MENU

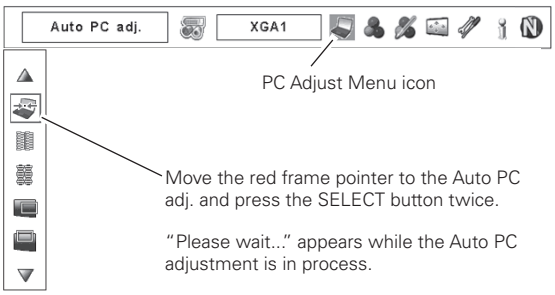

To store the adjusted parameters.
The adjusted parameters from the Auto PC Adjustment can be stored in the projector. Once the parameters are stored, the setting can be done just by selecting Mode in PC SYSTEM Menu (p.35). See Manual PC Adjustment on pages 37-38.

✔ ***Note:***

- *Fine sync, Total dots, Horizontal and Vertical position of certain computers cannot be fully adjusted with the Auto PC Adjustment function. When the image is not provided properly with this operation, manual adjustments are required. (pp.37-38.)*
- *Auto PC Adjustment cannot be operated in Digital Signal Input on the DVI terminal and "480p," "575p," "480i," "575i," "720p," "1035i," "1080p," or "1080i" is selected on the PC SYSTEM Menu.*
- *Depending on the condition of signals and the type and length of cables, the signals may not be properly viewed.*

Manual PC Adjustment

Some computers employ special signal formats which may not be tuned by Multi-Scan system of this projector. Manual PC Adjustment enables you to precisely adjust several parameters to match those special signal formats. The projector has 10 independent memory areas to store those parameters manually adjusted. It allows you to recall the setting for a specific computer.

✔ ***Note:*** *The PC Adjust Menu cannot be operated when the digital signal input on the DVI terminal is selected on PC System Menu.*

1 Press the MENU button to display the On-Screen Menu. Use the Point ◀▶ buttons to move the red frame pointer to the PC Adjust Menu icon.

2 Use the Point ▲▼ buttons to move the red frame pointer to the desired item and then press the SELECT button to display the adjustment dialog box. Use the Point ◀▶ buttons to adjust the setting value.

PC ADJUST MENU

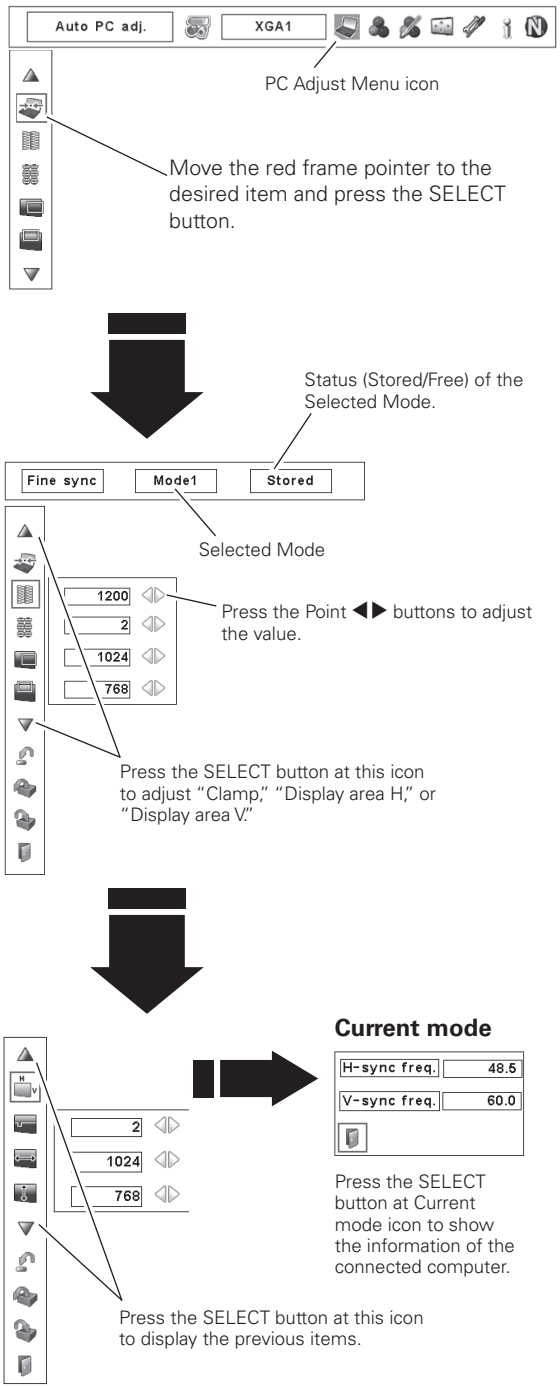

Fine sync

Use the Point ◀▶ buttons to adjust the value, eliminating a flicker from the image displayed (from 0 to 31).

Total dots

Use the Point ◀▶ buttons to adjust the number of total dots in one horizontal period to match your PC image.

Position H

Use the Point ◀▶ buttons to adjust the horizontal picture position.

Position V

Use the Point ◀▶ buttons to adjust the vertical picture position.

Current mode

Press the SELECT button to show H-sync freq. and V-sync freq. of the connected computer.

Clamp

Use the Point ◀▶ buttons to adjust the clamp level. When the image has dark bars, try this adjustment.

Display area H

Use the Point ◀▶ buttons to adjust the horizontal area displayed by this projector.

Display area V

Use the Point ◀▶ buttons to adjust the vertical area displayed by this projector.

Reset

To reset the adjusted data, select Reset and press the SELECT button. A confirmation box appears and then select [Yes]. All adjustments will return to their previous figures.

Mode free

To clear the adjusted data, select Mode free and then press the SELECT button. Move the red arrow pointer to the Mode that you want to clear and then press the SELECT button.

Store

To store the adjusted data, select Store and then press the SELECT button. Move the red arrow pointer to one of the Mode 1 to 10 in which you want to store, and then press the SELECT button.

Quit

Exit the PC Adjust Menu.

To clear the adjusted data.

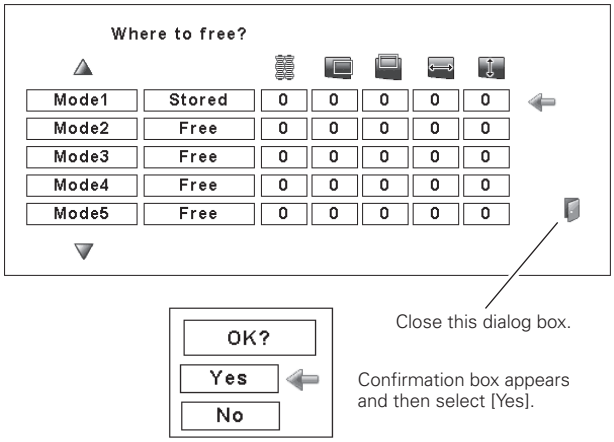

To store the adjusted data.

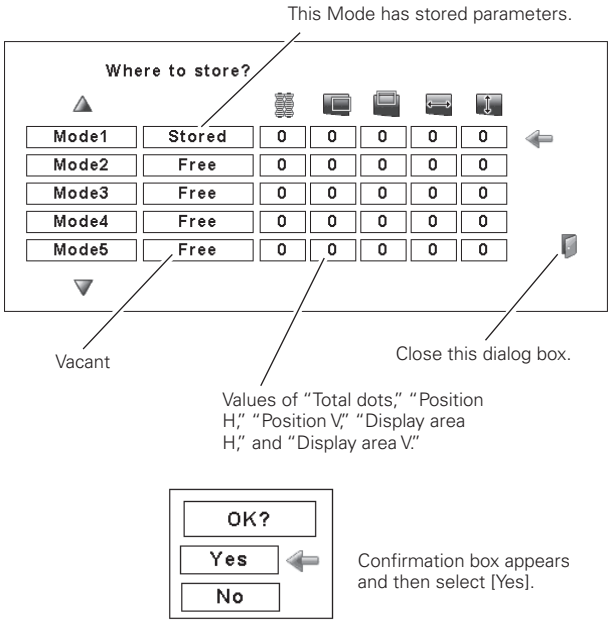

Image Level Selection

Direct Operation

Press the IMAGE SEL. button on the remote control to select the desired image level.

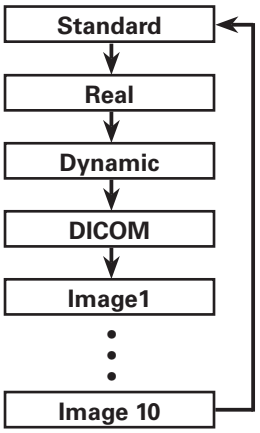

Remote Control

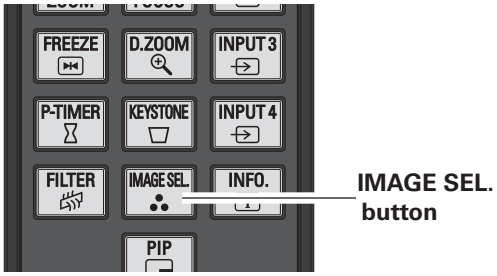

Menu Operation

1 Press the MENU button to display the On-Screen Menu. Use the Point ◀▶ buttons to move the red frame pointer to the Image Select Menu icon.

2 Use the Point ▲▼ buttons to move the red frame pointer to the desired image level and then press the SELECT button.

IMAGE SELECT MENU

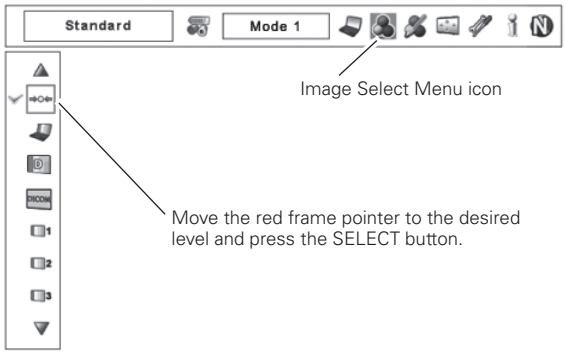

Standard

Normal picture level preset on the projector.

Real

Picture level with improved halftone for graphics.

Dynamic

For viewing contrasty images in a bright room.

DICOM

For DICOM Part 14 grayscale standard compliant images.

IMAGE 1–10

User preset picture adjustment in the Image Adjust Menu. (p.48)

✔***Note:***

- *DICOM stands for Digital Imaging and Communications in Medicine.*

Screen Size Adjustment

Select the desired screen size that conforms to the input signal source.

1 Press the MENU button to display the On-Screen Menu. Use the Point ◀▶ buttons to move the red frame pointer to the Screen Menu icon.

2 Use the Point ▲▼ buttons to move the red frame pointer to the desired function and then press the SELECT button.

SCREEN MENU

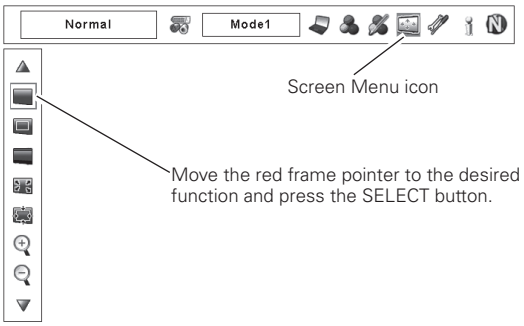

Normal

Provide the image at the normal computer aspect ratio of 4:3.

True

Provide the image in its original size. When the original image size is larger than the screen size (1400 x 1050), the projector enters to the panning mode automatically. Use the Point ▲▼◀▶ buttons to pan the image. When adjusted, the arrows will turn red. When reached to the correction limits, the arrows will disappear.

Wide

Provide the image to fit the wide video aspect ratio (16:9) by expanding the image width uniformly. This function can be used to provide the squeezed video signal at 16:9.

Full screen

Provide the full screen image.

Custom

Adjust the screen scale and position manually with this function.
Press the SELECT button at Custom and the "Custom" is displayed on the screen for a few seconds. To display the Aspect dialog box, press the SELECT button at Custom again and then the Aspect dialog box appears.

Scale H/V.....	Adjust the Horizontal/Vertical screen scale.
H&V.....	When set to "On," the aspect ratio is fixed. The "Scale V" appears dimmed and becomes unavailable. Adjust "Scale H," then the screen scale is automatically modified based on the aspect ratio.
Position H/V.....	Adjust the Horizontal/Vertical screen position.
Common	Save the adjusted scale to all the inputs. Press the SELECT button at Common to display a confirmation box. To save the scale, press the SELECT button at "Yes." When Custom is selected, the saved scale is used.
Reset.....	Reset the all adjusted values. Press the SELECT button at Reset to display a confirmation box. To reset, press the SELECT button at "Yes."

✔ ***Note:***

- *True, Full screen, and Digital zoom +/– cannot be selected when no signal is detected in the PC System Menu. (p.35)*
- *The projector cannot display the resolution higher than 1400 x 1050. If your computer's screen resolution is higher than 1600 x 1200, lower the resolution before connecting the projector.*
- *The image data other than 1400 x 1050 dots are modified to fit the screen size in initial mode.*
- *The panning function may not operate properly if the stored Mode in the PC Adjust Menu is used. (p.38)*

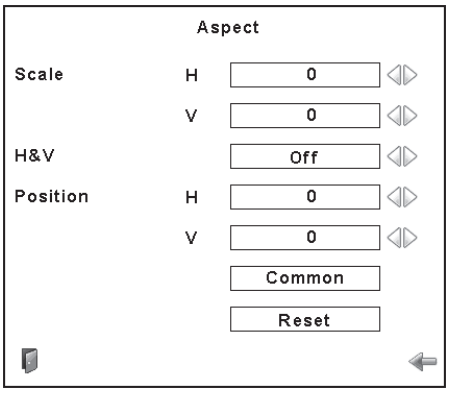

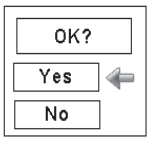

Press the SELECT button at Common or Reset, to display a confirmation box.

✔ ***Note:***

- *When no signal is detected, "Normal" is set automatically and the Aspect dialog box disappears.*
- *The adjustable range for Scale H/V and Position H/V is limited depending on the input signal.*

Keystone

This function is used to store or reset the keystone correction when the Main On/Off Switch is pressed to Off or the AC power cord is unplugged. Use the Point ◀▶ buttons to switch between each option.

Store. . . Keep the keystone correction even when the Main On/Off Switch is pressed to Off or the AC power cord is unplugged.

Reset . . Release the keystone correction when the Main On/Off Switch is pressed to Off or the AC power cord is unplugged.

To correct keystone distortion, press the SELECT button. The Keystone dialog box appears. Use the Point ▲▼◀▶ buttons to correct keystone distortion. (p.31)

Ceiling

When this function is set to "On," the picture is top/bottom and left/right reversed. This function is used to project the image from a ceiling-mounted projector.

Rear

When this function is set to "On," the picture is left/right reversed. This function is used to project the image from the rear of the screen.

Reset

This function returns all adjusted values to the factory default settings. Press the SELECT button at Reset to display a confirmation box. To reset, press the SELECT button at "Yes."

Quit

Exit the Screen Size Adjustment Menu.

For zooming in and out the images

Digital zoom +

Select Digital zoom +. The On-Screen Menu disappears and "D. zoom +" appears. Press the SELECT button to expand the image size. Use the Point ▲▼◀▶ buttons to pan the image. The Panning function can work only when the image is larger than the screen size.
You can also enter the Digital zoom + mode by pressing the D.ZOOM button on the remote control.

Digital zoom –

Select Digital zoom –. The On-Screen Menu disappears and "D.zoom –" appears. Press the SELECT button to compress the image size.
You can also enter the Digital zoom – mode by pressing the D.ZOOM button on the remote control.

To exit the Digital Zoom +/– mode, press any button except the D.ZOOM , SELECT, and Point buttons.

SCREEN MENU

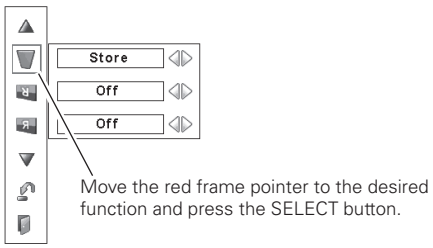

Ceiling

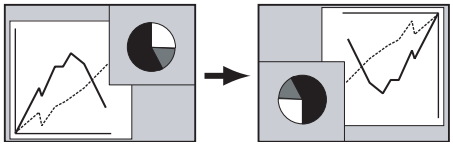

Rear

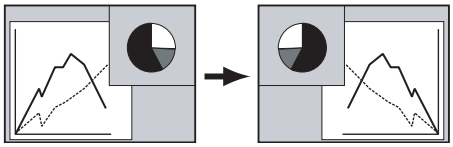

✔ ***Note:***

- *The panning function may not operate properly if the stored Mode in the PC Adjust Menu is used. (p.38)*
- *The minimum compression ratio can be limited depending on the input signal or when the Keystone function is working or when the custom is selected for the screen size.*
- *Digital zoom +/– cannot be selected when Full screen or True is selected.*

Video System Selection

1 Press the MENU button to display the On-Screen Menu. Use the Point ◀▶ buttons to move the red frame pointer to the AV System Menu icon.

2 Use the Point ▲▼ buttons to move the red arrow pointer to the desired system and then press the SELECT button.

Video Jack or S-Video Jack

Auto

The projector automatically detects an incoming video system, and adjusts itself to optimize its performance.

PAL/SECAM/NTSC/NTSC4.43/PAL-M/PAL-N

If the projector cannot reproduce proper video image, select a specific broadcast signal format from among PAL, SECAM, NTSC, NTSC 4.43, PAL-M, and PAL-N.

AV SYSTEM MENU (VIDEO OR S-VIDEO)

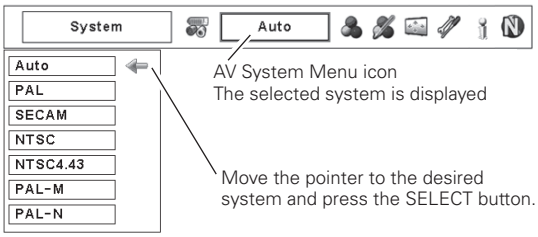

Y, Pb/Cb, Pr/Cr Jacks

Auto

The projector automatically detects an incoming video signal, and adjusts itself to optimize its performance.
When the Video System is 1035i or 1080i, select the system manually.

COMPONENT VIDEO SIGNAL FORMAT

If the projector cannot reproduce proper video image, select a specific component video signal format from among 480i, 575i, 480p, 575p, 720p, 1035i, 1080p, and 1080i.

AV SYSTEM MENU (COMPONENT VIDEO)

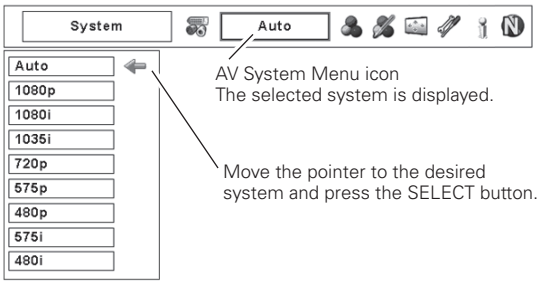

✔ ***Note:***

- *The AV System menu cannot be selected when selecting RGB(Scart).*

Image Level Selection

Direct Operation

Press the IMAGE SEL. button on the remote control to select the desired image level.

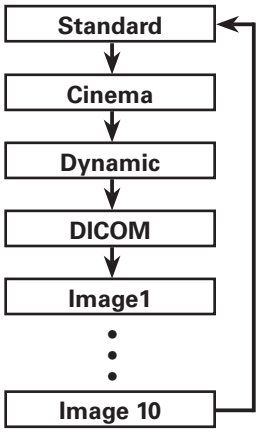

Remote Control

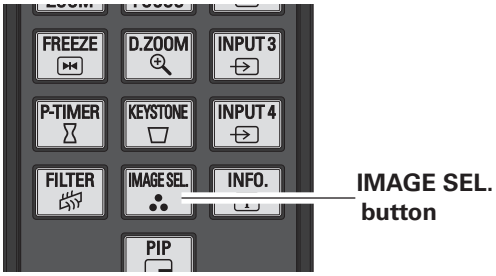

Menu Operation

1 Press the MENU button to display the On-Screen Menu. Use the Point ◀▶ buttons to move the red frame pointer to the Image Select Menu icon.

2 Use the Point ▲▼ buttons to move the red frame pointer to the desired image level and then press the SELECT button.

IMAGE SELECT MENU

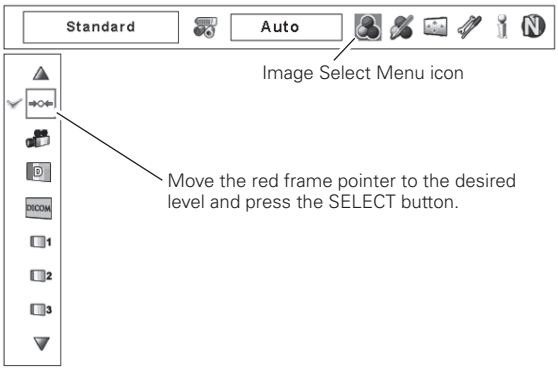

Standard

Normal picture level preset on the projector.

Cinema

Picture level adjusted with fine tone.

Dynamic

For viewing contrasty images in a bright room.

DICOM

For DICOM Part 14 grayscale standard compliant images.

IMAGE 1–10

User preset picture adjustment in the Image Adjust Menu. (p.48)

✔***Note:***

- *DICOM stands for Digital Imaging and Communications in Medicine.*

Screen Size Adjustment

1 Press the MENU button to display the On-Screen Menu. Use the Point ◀▶ buttons to move the red frame pointer to the Screen Menu icon.

2 Use the Point ▲▼ buttons to move the red frame pointer to the desired function and then press the SELECT button.

SCREEN MENU

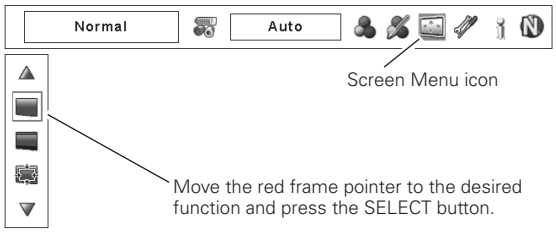

Normal

Provide the image at the normal video aspect ratio of 4:3.

Wide

Provide the image at the wide screen ratio of 16:9.

Custom

Adjust the screen scale and position manually with this function.
Press the SELECT button at Custom and the "Custom" is displayed on the screen for a few seconds. To display the Aspect dialog box, press the SELECT button at Custom again and then the Aspect dialog box appears.

Scale H/V.....	Adjust the Horizontal/Vertical screen scale.
H&V.....	When set to "On," the aspect ratio is fixed. The "Scale V" appears dimmed and becomes unavailable. Adjust "Scale H," then the screen scale is automatically modified based on the aspect ratio.
Position H/V.....	Adjust the Horizontal/Vertical screen position.
Common	Save the adjusted scale to all the inputs. Press the SELECT button at Common to display a confirmation box. To save the scale, press the SELECT button at "Yes." When Custom is selected, the saved scale is used.
Reset.....	Reset the all adjusted values. Press the SELECT button at Reset to display a confirmation box. To reset, press the SELECT button at "Yes."

✔ ***Note:***

- *Wide cannot be operated when "720p," "1035i," "1080i," or "1080p" is selected on AV System Menu (p.42).*

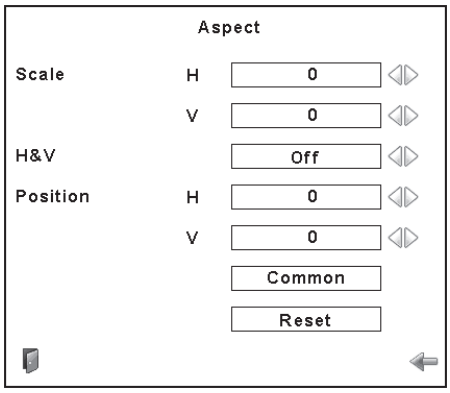

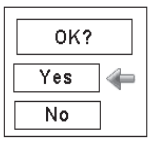

Press the SELECT button at Common or Reset, to display a confirmation box.

✔ ***Note:***

- *When no signal is detected, "Normal" is set automatically and the Aspect dialog box disappears.*
- *The adjustable range for Scale H/V and Position H/V is limited depending on the input signal.*

Keystone

This function is used to store or reset the keystone correction when the Main On/Off Switch is pressed to Off or the AC power cord is unplugged. Use the Point ◀▶ buttons to switch between each option.

Store. . . Keep the keystone correction even when the Main On/Off Switch is pressed to Off or the AC power cord is unplugged.

Reset . . Release the keystone correction when the Main On/Off Switch is pressed to Off or the AC power cord is unplugged.

To correct keystone distortion, press the SELECT button. The Keystone dialog box appears. Use the Point ▲▼◀▶ buttons to correct keystone distortion. (p.31)

Ceiling

When this function is set to "On," the picture is top/bottom and left/right reversed. This function is used to project the image from a ceiling-mounted projector.

Rear

When this function is set to "On," the picture is left/right reversed. This function is used to project the image from the rear of the screen.

Reset

This function returns all adjusted values to the factory default settings. Press the SELECT button at Reset to display a confirmation box. To reset, press the SELECT button at "Yes."

Quit

Exit the Screen Size Adjustment Menu.

SCREEN MENU

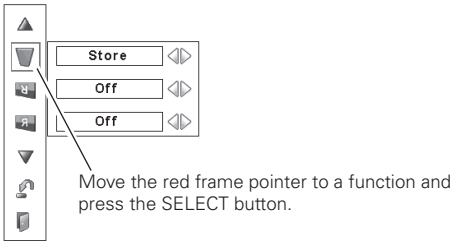

Ceiling

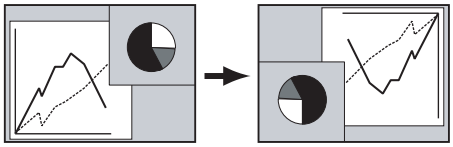

Rear

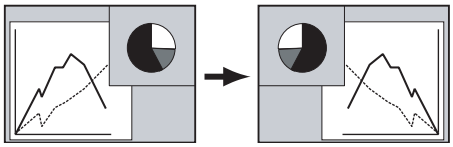

Image Adjustment

1 Press the MENU button to display the On-Screen Menu. Use the Point ◀▶ buttons to move the red frame pointer to the Image Adjust Menu icon.

2 Use the Point ▲▼ buttons to move the red frame pointer to the desired item and then press the SELECT button to display the adjustment dialog box. Use the Point ◀▶ buttons to adjust the setting value.

IMAGE ADJUST MENU

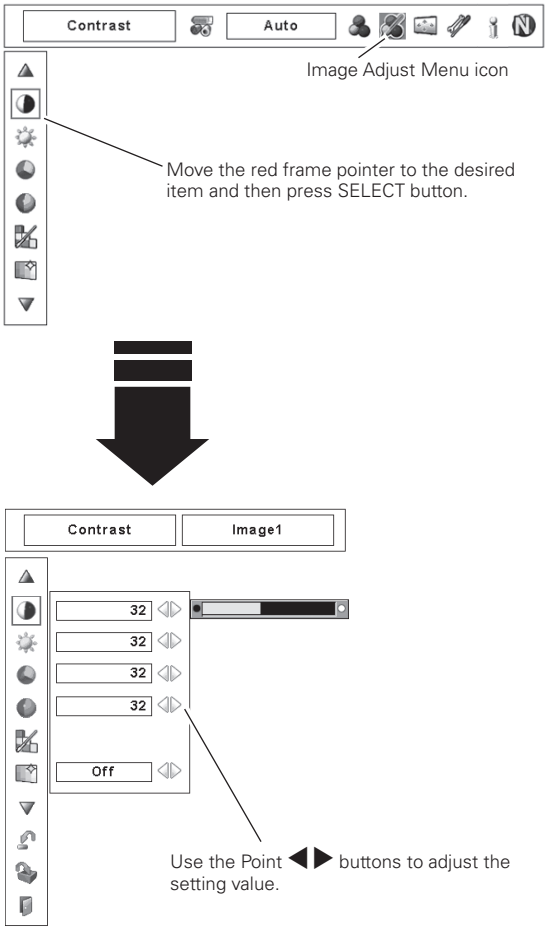

Contrast

Press the Point ◀ button to decrease contrast; press the Point ▶ button to increase the contrast (from 0 to 63).

Brightness

Press the Point ◀ button to decrease the brightness; press the Point ▶ button to increase the brightness (from 0 to 63).

Color ✻

Press the Point ◀ button to decrease the intensity of the color; press the Point ▶ button to increase the intensity of the color (from 0 to 63).

Tint ✻

Press the Point ◀▶ buttons to adjust the tint value to obtain proper color balance (from 0 to 63).

Color Management

The Color Management function can be used to adjust the LEVEL, PHASE, and GAMMA of the selected display colors (except for black, white, and gray) on the screen and replace these colors with other colors if required.
You can store up to eight (8) color management data.

1 Use the Point ▲▼ buttons to move the red frame pointer to Color Management, and then press the SELECT button. The projected image freezes, and the COLOR MANAGEMENT POINTER appears.

2 Use the Point ▲▼◀▶ buttons to move the pointer to the spot where you want to adjust the color and then press the SELECT button. The COLOR SELECTION window appears, and the color in the center of the pointer is selected and you can adjust the color.

3 Use the Point ▲▼◀▶ buttons to adjust the LEVEL and PHASE of the color, and then press the SELECT button to confirm the setting. Then use the Point ▲▼ buttons to adjust the GAMMA for the color and press the SELECT button to accept the setting. After adjusting, press the SELECT button to go to the COLOR MANAGEMENT LIST.

POINTER MODE

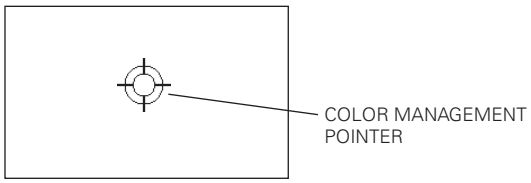

COLOR SELECTION MODE

LIST

Go to the COLOR MANAGEMENT LIST.

✔ ***Note:***

✻ Displayed in grayout in the computer Input.

- *Tint cannot be selected when the video system is PAL, SECAM, PAL-M, or PAL-N (p.42).*
- *Color management is displayed in grayout when there is no signal.*

COLOR SELECTION MODE (continued)

COLOR M.

Return to the COLOR MANAGEMENT POINTER. (If you press the MENU button on the side control or the remote control, it returns to the COLOR MANAGEMENT POINTER and you will need to reselect and readjust the color.)

MENU

Return to the IMAGE ADJUST Menu. Any settings that have been changed will not be stored. To store the changed settings, be sure to select "LIST" and go to the COLOR MANAGEMENT LIST.

4 In the COLOR MANAGEMENT LIST, the adjusted color data are checkmarked. You can decide whether or not to apply the adjusted color data in the list to the projected image (see below).

LIST MODE

✓

Clear the check mark if you do not want to apply the adjusted color data; select the check mark and then press the SELECT button. The check mark disappears.

COLOR PALETTE

Return to the COLOR SELECTION mode so that you can readjust the setting for the color in that line. (This option is not available if the check mark is cleared.)

DEL

Select the DEL box if you want to delete the adjusted data. Press the SELECT button and a confirmation box appears and then select [Yes].

ALL DEL

Delete all the data in the list. Press the SELECT button and a confirmation box appears and then select [Yes].

MENU

The same function as stated above.

COLOR M.

The same function as stated above.

Auto picture control

Use the Point ◀▶ buttons to select the desired Auto picture control position (Off, L1 or L2).

Off . . . . Auto picture control OFF position.
L1 . . . . . Auto picture control LEVEL 1 position.
L2 . . . . . Auto picture control LEVEL 2 position.

BrilliantColor

BrilliantColor extends the exposure range and sharpens detail for grain free images. Use the Point ◀▶ buttons to select from (Off/On).

Color temp.

Use the Point ◀▶ buttons to select the desired Color temp. level (XLow, Low, Mid, or High).

COLOR SELECTION MODE

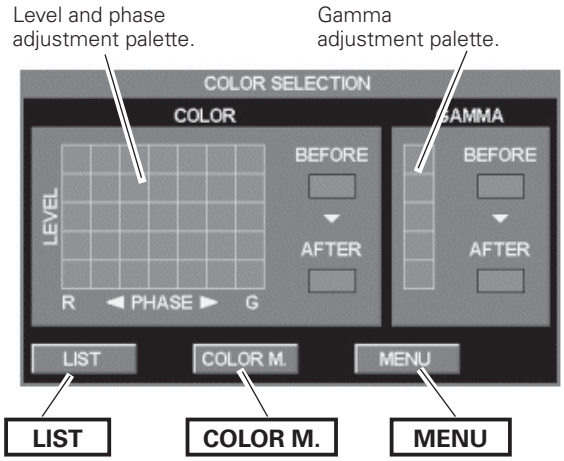

LIST MODE

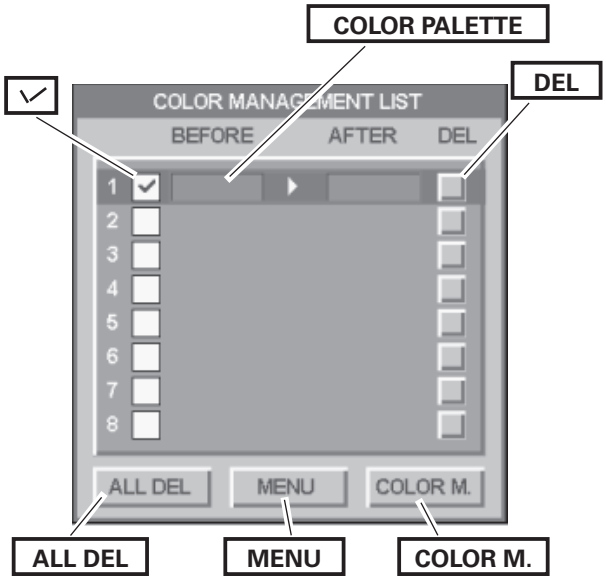

✔ ***Note:***

- *Auto picture control is fixed to 'Off' when 'DICOM' is selected in the Image level selection (pp.39, 43).*
- *When 'DICOM' is selected in the Image level selection, you can select the Color temp. level from Blue base, Clear base, High, Mid, Low, or XLow (pp.39, 43).*
- *Color temp. will be displayed in grayout when 'Dynamic' is selected in the Image level selection (pp.39, 43).*

White balance (Red/Green/Blue)

Press the Point ◀ button to lighten red/green/blue tone; press the Point ▶ button to deepen red/green/blue tone (from 0 to 63).

Offset (Red/Green/Blue)

Press the Point ◀ button to lighten red/green/blue tone of the black level of an image; press the Point ▶ button to deepen red/green/blue tone of the black level of an image (from 0 to 63).

Sharpness

Press the Point ◀ button to decrease the sharpness of the image; press the Point ▶ button to increase the sharpness of the image (from 0 to 31).

Gamma

Use the Point ◀▶ buttons to adjust the gamma value to obtain a better balance of contrast (from 0 to 15).

Noise reduction ✻

Noise interference on the screen can be reduced. Press the Point ◀▶ buttons to change the noise reduction mode.

Off . . . . Noise reduction mode is "Off"
On . . . . Noise reduction mode is "On"

Progressive ✻

An interlaced video signal can be displayed in progressive mode. Press the Point ◀▶ buttons to change the progressive scan mode.

Off . . . . Progressive scan mode is "Off."
On . . . . Progressive scan mode is "On."
Film . . . For watching a film. With this function, the projector reproduces pictures faithful to the original film quality.

✔ ***Note:***

•Picture is distorted at the moment of On/Off /Film switching.

Reset

To reset the adjusted data, select Reset and press the SELECT button. A confirmation box appears and then select [Yes]. All adjustments will return to their previous figures.

Store

To store the adjusted data, move the red frame pointer to the Store icon and press the SELECT button. The Image Level Menu appears. Move the red arrow pointer to any of the Image 1 to 10 in which you want to set and press the SELECT button. A confirmation box appears and then select [Yes].

Quit

Exit the Image Adjust Menu.

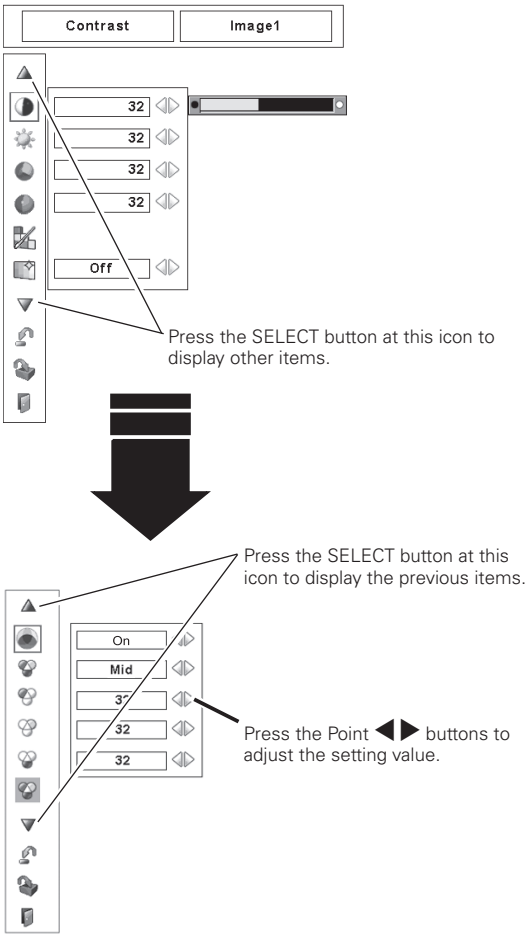

✔ ***Note:***

✻ Displayed in grayout in the computer Input.

•When the Color matching function is set to 'On' and the White balance Red, Green, or Blue is adjusted, the Color temp. level will change to "Adj."

•'Sharpness' is fixed to the default value when 'DICOM' is selected in the Image level selection.

•Progressive cannot be selected when "480p," "575p," "720p," or "1080p" is selected (p.42).

•Noise reduction cannot be selected with the computer input and when the video signal format is 1080p.

Setting

This projector has a Setting menu that allows you to set up other various functions.

1 Press the MENU button to display the On-Screen Menu. Use the Point ◀▶ buttons to move the red frame pointer to the Setting Menu icon.

2 Use the Point ▲▼ buttons to move the red frame pointer to the desired item and then press the SELECT button. The Setting dialog box appears.

Language

The language used in the On-Screen Menu is available in English, German, French, Italian, Spanish, Portuguese, Dutch, Swedish, Russian, Chinese, Korean, or Japanese.

Menu

This function allows you to adjust the position and size of the On-Screen Display and the value adjustment bar in the Picture Image Adjustment Menu.

Position

This function is used to adjust the On-Screen Menu display position. Press the SELECT button and the adjustment screen appears (arrows appear). Use the Point ▲▼◀▶ buttons to adjust the position. After making the adjustment, press the SELECT button to return to the Menu screen.

Simple menu

When this function is set to "On," the value adjustment bar in the Picture Image Adjustment Menu appears on the screen.

Menu size

You can enlarge the size of On-Screen display to two times the normal size. Use the Point ◀▶ buttons to select from (Normal/Double).

Display

This function decides whether to display On-Screen Displays.

On . . . . . Show all the On-Screen Displays. Use this function when you want to project images after the lamp becomes bright enough. The factory default setting is in this option.

Countdown Off. . . Show the input image instead of the countdown when turning on the projector. Use this function when you want to project the image as early as possible even when the lamp is not bright enough.

Off . . . . . Hide the On-Screen Displays except:

- On-Screen Menu
- "Power off?" (p.25)
- Color management operation screen (pp.46-47)
- "No signal" for Power management (p.57)
- P-TIMER (p.31)
- "Please wait...." for Auto PC adjustment (p.36)
- Arrows for panning mode
- Warnings for lens and color wheel installations.

SETTING MENU (Language)

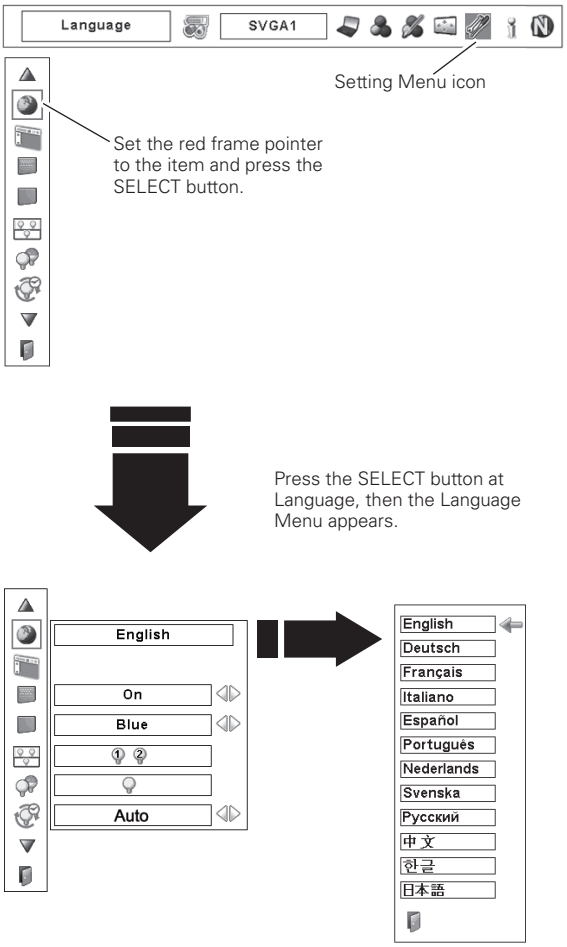

Menu

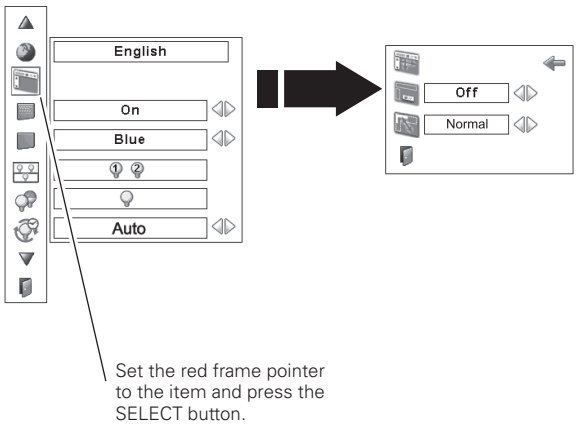

Background

The selected background screen will be displayed when no input signal is detected.

Blue . . . Blue colored background.
User . . . The image you captured.
Black. . . Black colored background.

✔ **Note:**

- *"User" cannot be selected when the image is not captured.*

Lamp mode

This projector is equipped with 2 projection lamps and the number of using lamps can be switched to 2 lamps or 1 lamp. Using 1 lamp maintains the life of projection lamps.

Press the SELECT button at Lamp mode to display a dialog box. Use the Point ▲▼ buttons to select "2-Lamps", "Lamp1" or "Lamp2" and press the SELECT button. Then the confirmation message appears. Select [Yes] and press the SELECT button.

2-Lamps . . Two lamps turn on.
Lamp1 . . . Only Lamp1 turns on.
Lamp2 . . . Only Lamp2 turns on.

✔ **Note:**

- *When switching from one of lamps to the other (e.g. when switching from Lamp1 to Lamp2), both lamps will light until the brightness of the lamps are stabilized.*
- *When neither of the two lamps is lighted, the projector will shutdown automatically.*
- *When either of the two lamps does not light up, the LAMP 1/2 REPLACE indicator blinks orange and the projector will light the other automatically. (X mark will appear on the unlighted lamp in the Lamp Status Display. See page 65 for details.)*

Lamp control

Lamp control

This function allows you to change brightness of the screen.

Normal . . . Normal brightness.
Eco 1. . . . . Lower brightness and Fan speed decrease. Lower brightness reduces the lamp power consumption and extends the lamp life.
Eco 2. . . . . Lower brightness and Fan speed increase. Lower brightness reduces the lamp power consumption and extends the lamp life. It is recommended to use Eco 2 when using the projector continuously over a long period of time.

✔ **Note:**

- *The fan noise becomes louder in Eco 2 than in Eco 1. Select the suitable mode for the used environment.*

Lamp life control

Select the lamp operation when the total lighting time of a lamp exceeds the recommended total hours of use.

Mode 1 . . . A lamp can be turned on even after exceeding the recommended total hours of use.
Mode 2 . . . A lamp is not turned on after exceeding the recommended total hours of use.

✔ **Note:**

- *If Mode 2 has been selected and either of two lamps exceeded its recommended total hours of use, Lamp interval mode will be fixed to 'Off'. Also, '2-Lamps' icon in the Lamp mode and the icon of lamp which exceeded its recommended total hours of use will be displayed in grayout.*
- *If Mode 2 has been selected and both lamps exceeded the recommended total hours of use, the warning icon will be displayed at the time of power-on. Then the projector will turn off after 3 minutes.*

Lamp interval

This function can be used to automatically switch the lamp that is turned on after a certain period of time in order to reduce the lamp deterioration when 'Lamp1' or 'Lamp2' has been selected in 'Lamp mode' setting.

Use the Point ◀▶ buttons to select from (Off/Auto/24H/200H/500H/1000H/2000H).

✔ **Note:**

- *When either of the two lamps is out, the projector will light the other automatically even if 'Off' is selected.*
- *When 'AUTO' is selected, the projector automatically detects which lamp is used less often than the other at the time of power-on and lights it.*
- *The setting values of time interval may not be accurate, and should be used only as a guide.*

Picture in Picture

This function is used to project two videos simultaneously by placing a separate small sub screen within or next to the main screen.

Use the Point ▲▼ buttons to move the red frame pointer to Picture in Picture and then press the SELECT button to display a dialog box. You can also display the dialog box by pressing and holding the PIP button on the remote control for more than 3 seconds.
Use the Point ◀▶ buttons to adjust the setting value.

Picture in Picture . . . . Show the selected mode (Off/User1-5) and its status (Stored /Free/Adj.). 'User1' and 'User2' have stored default values. See page 30 for details.

Main picture/
Sub picture .. Input: Select an input from Input 1-4.
Source: Select an input source. The display varies depending on the selected input.
Size: Select the display size. Main picture can be changed between 10 and 100%, and Sub picture can be changed between 10 to 50% in increments of 10%.
Position: Press the SELECT button at Position and the display position setting screen appears. Use the Point ▲▼◀▶ buttons to adjust the display position of active frame indicated in white. The frame will disappear after 10 seconds or when the SELECT button is pressed.

Frame Lock. . . Set the Frame Lock to Main picture or Sub picture.

Reset . . . . . Press the SELECT button at Reset to display a confirmation box. To reset, press the SELECT button at [Yes].

Mode free . . . Delete the data stored in the Mode and return to the 'Free' state. Use the Point ◀ ▶ buttons to select Mode free and press the SELECT button to show the 'Where to free?' dialog box. Move the red arrow pointer to one of the mode (Mode 1 - 5) which you want to delete and press the SELECT button. Then the confirmation box appears. To delete, select [Yes].

Store. . . . . Store the adjusted data in the User 1–5. Use the Point ◀▶ buttons to select Store and press the SELECT button to show the 'Where to store?' dialog box. Move the red arrow pointer to one of the mode (Mode 1 - 5) in which you want to store and press the SELECT button. Then the confirmation box appears. To store adjusted data, select [Yes].

Quit . . . . . Exit the Picture in Picture menu.

Picture in Picture

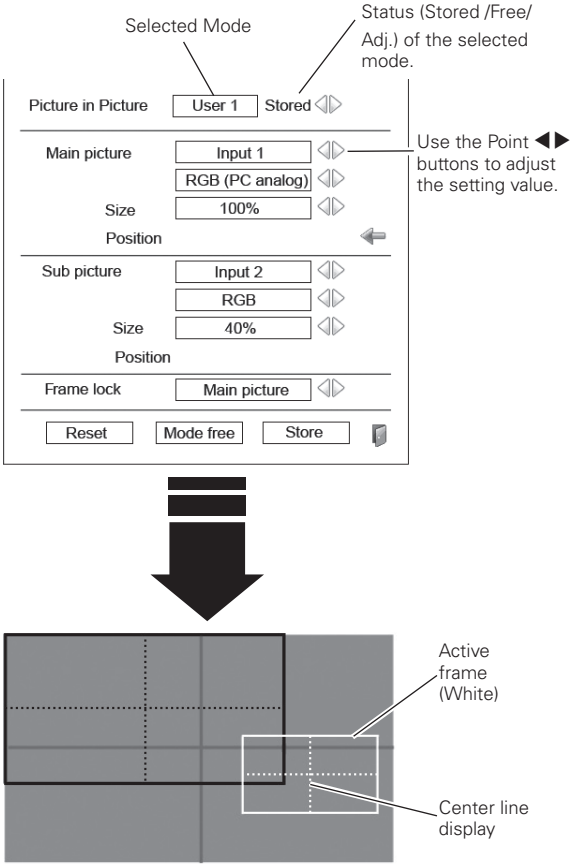

To store the adjusted data.

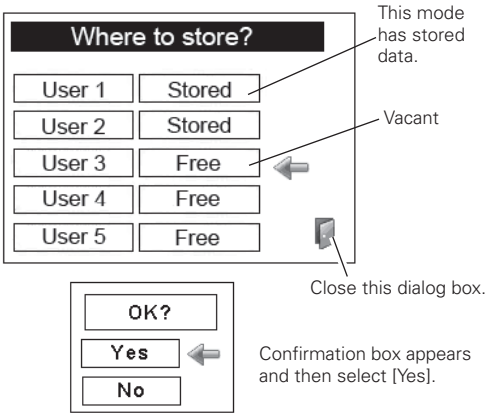

✔ ***Note:***

- *The Picture in Picture function is not available depending on the input signals and the selected input terminals. Refer to 'List of Picture in Picture' for details. (p.82)*
- *When the input signal(s) is/are incompatible, X mark will be displayed on the Main/Sub picture.*
- *While the Main and Sub pictures are being displayed, System, Image select, Image adj., Screen menus (except for 'Keystone', 'Ceiling' and 'Rear'), and DynamicBlack are inoperative.*
- *'Progressive' and 'Noise reduction' functions are fixed to 'Off' during the Picture in Picture operation. Therefore, the image may become grainy depending on the input signal.*

Edge blending

This function allows multiple projector images to be seamlessly overlapped.

Use the Point ▲▼ buttons to move the red frame pointer to Edge blending and then press the SELECT button to display a dialog box. Use the Point ▲▼◀▶ buttons to adjust the setting value.

Edge blending . . Set to 'On' to activate the Edge blending function.
Width. . . . . Adjust the width of correction.
Right/Left: Set the width. (from 0 to 700).
Top/Bottom: Set the width. (from 0 to 525).
Black level . . . . . Adjust the black level of projected image.
All: The values of R, G, and B will be changed simultaneously.
R/G/B: Adjust the value (± 127).
Test pattern . . . . Select 'On' to display a suitable pattern.
Reset. . . . . Select 'Reset' and press the SELECT button. Then 'Return to factory default of Edge Blending?' message appears. To reset, press the SELECT button at [Yes].
Quit . . . . . Exit the Edge blending menu.

Color matching

When multiple sets are used simultaneously, this projector allows the user to correct the difference of colors among the sets.

Use the Point ▲▼ buttons to move the red frame pointer to Color matching and then press the SELECT button to display a dialog box. Use the Point ▲▼◀▶ buttons to adjust the setting value.

Color matching . . . .Set to 'On' to activate the Color matching function. When the color matching is set to 'Off', all items except for Advanced color matching are displayed in grayout and cannot be adjusted.
Color adjustment. . .Adjust the color setting of Red/Green/Blue/White. The chromatic coordinate (X,Y) of Red, Green, Blue, and White can be adjusted respectively. The adjustable range is from 0.000 to 1.000.
Auto test pattern . . .Select 'On' to display a suitable pattern when setting items.
Reset. . . . . .Select 'Reset' and press the SELECT button. Then the confirmation message appears. Press the SELECT button at [Yes] to reset to the previously stored values.
Store . . . . . .Select 'Store' and press the SELECT button to display the confirmation box. To store adjusted data, select [Yes].
Advanced color matching . . . . .Select 'Advanced color matching' and press the SELECT button for more detailed settings. Another setting screen will appear.

Edge blending

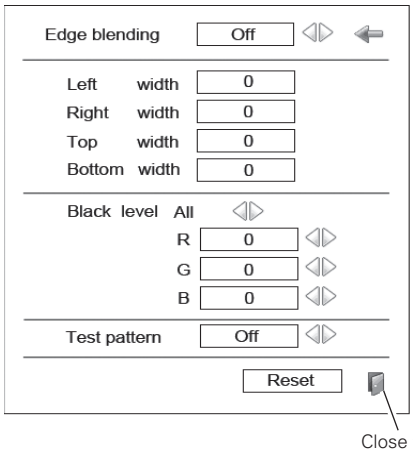

✔ ***Note:***

- *The overlapping areas might become uneven depending on the images. In such a case, it is recommended to decrease the contrast of the images in the Image Adjust Menu or set the BrilliantColor function to 'Off'.*
- *See "How to adjust multiple screens" on page 88 for further information.*

Color matching

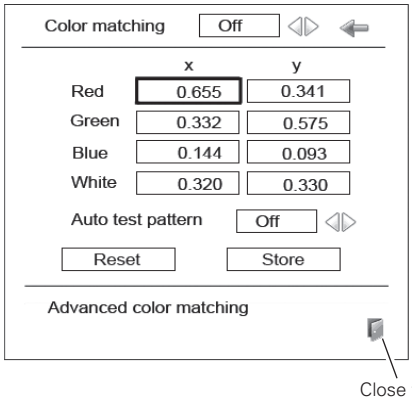

Advanced color matching . . . . . Set to 'On' to activate the 'Advanced color matching'. When it is set to 'Off', all items except for 'Test pattern' are displayed in grayout and cannot be adjusted.

Measured . . . . . When using the color wheel set optimized for high brightness, the chromatic coordinate (X,Y) and the brightness (L) of Red, Green, Blue, Half white, and White are displayed (Fig.1). When using the color wheel set optimized for rich color reproduction, the chromatic coordinate (X,Y) and the brightness (L) of Red, Green, Blue, and White are displayed (Fig.2).

Information: Select 'Information' and press the SELECT button to display the information dialog box (Fig.3). Measured information display can be used to confirm the current setup condition of the Image select menu and the color wheels.

Target . . . . . Adjust the chromatic coordinate (X,Y) and the gain value (g) of Red, Green, Blue, Cyan, Magenta, Yellow, and White. Use the Point ▲▼◀▶ buttons to move the red frame pointer to an item of which you want to adjust the value and then press the SELECT button. Use the Point ▲▼ buttons to adjust the value. To move to the next digit, use the Point ◀▶ buttons. Press the SELECT button to set the value.

Auto test pattern . . . Select 'On' to display a suitable pattern when setting items.

Factory default . . . . Select 'Factory default' and press the SELECT button. Then 'Return to factory default of Color matching?' message appears. To reset the selected Measured value and Target value, select [Yes]. Then, the confirmation box appears. Press the SELECT button at [Yes] again.

Reset . . . . . Select 'Reset' and press the SELECT button. Then the confirmation message appears. Press the SELECT button at [Yes] to reset to the previously stored values.

Store . . . . . Select 'Store' and press the SELECT button. Then the confirmation box appears. To store adjusted data, select [Yes].

Test pattern . . . . . When using the color wheel set optimized for high brightness, use the Point ▲▼ buttons to select from (Measured) Red/Green/Blue/Half white/White/(Target) Red/Green/Blue/ Cyan/ Magenta/Yellow/White.
When using the color wheel set optimized for rich color reproduction, use the Point ▲▼ buttons to select from (Measured) Red/Green/ Blue/White/(Target) Red/Green/Blue/Cyan/ Magenta/Yellow/White.

Quit . . . . . Exit the Color matching menu.

DynamicBlack

DynamicBlack™ improves the black level of the projector. Black level is the darkest part of a picture and varies between viewing devices and environments. Set DynamicBlack Off/Low/High.

Advanced color matching

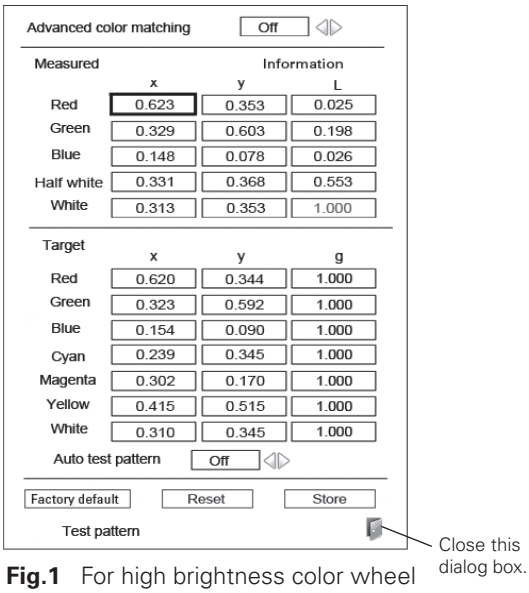

Fig.1 For high brightness color wheel

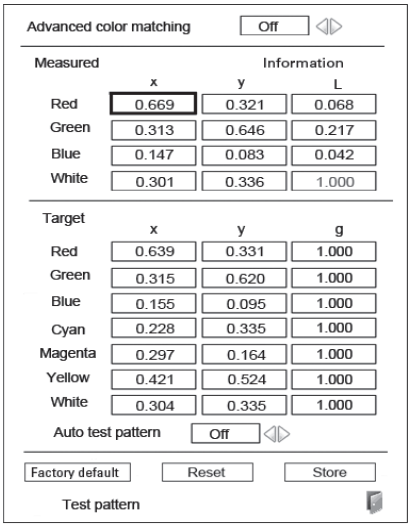

Fig.2 For rich color reproduction color wheel

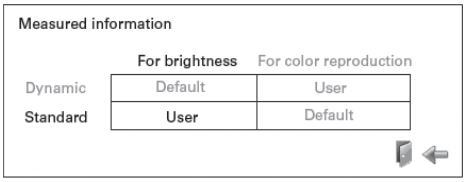

Fig.3 Measured information dialog box

✔ ***Note:***

- *In the Measured information dialog box, 'Standard' indicates all the Image select menus other than 'Dynamic'.*

✔ ***Note:***

- *DynamicBlack is fixed to 'Off' when 'DICOM' is selected in the Image level selection (pp.39, 43).*

HDMI setup

Select Normal or Enhanced according to the output signal of video equipment. Press the Point ◀ ▶ buttons to switch between each option.

Normal . . . . When the output of video equipment is set to "STANDARD."
Enhanced . . When the output of video equipment is set to "ENHANCED."

The names for the output setting of video equipment vary from equipment to equipment. For details, refer to the owner's manual of video equipment.

When the black parts of the image are destroyed or stand out, please switch to "Normal" or "Enhanced", and then switch the output type of the HDMI video output equipment.

HDMI setup

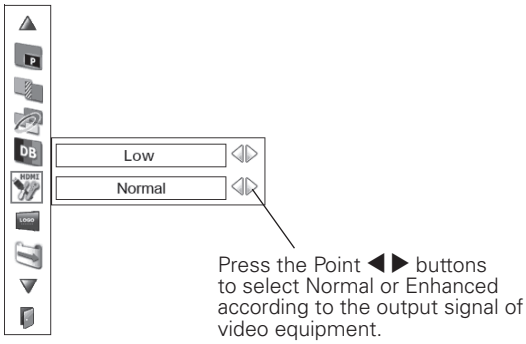

Logo

This function allows you to customize the screen logo with Logo select, Capture, and Logo PIN code lock functions.

Logo select

This function decides on the starting-up display from among the following options.

Off . . . . Show the countdown display only.
Default . Show the factory-set logo.
User . . . Show the image you captured.

Capture

This function enables you to capture an image being projected to use it for a starting-up display or interval of presentations.

Select Capture and press the SELECT button.
A confirmation box appears and select [Yes] to capture the projected image.

After capturing the projected image, go to the Logo select function and set it to "User". Then the captured image will be displayed the next time you turn on the projector.

To cancel the Capture function, select [No].

✔ ***Note:***

- *Before capturing an image, select "Standard" in the Image Select Menu to capture a proper image. (pp.39, 43)*
- *A signal from a computer can be captured up to 1400 x 1050 dots.*
- *Certain signals may not be captured properly.*
- *When capturing the image that has been adjusted by the Keystone function, the adjusted data is automatically reset and the projector captures an image without keystone correction.*
- *When starting to capture a new image, the previously stored image is cleared even if you cancel the capturing.*
- *Once you exit the Logo Menu after setting the Logo lock to "On," you are required to enter the PIN code every attempting to change the Logo setting.*
- *"User" cannot be selected when the image is not captured.*

Logo

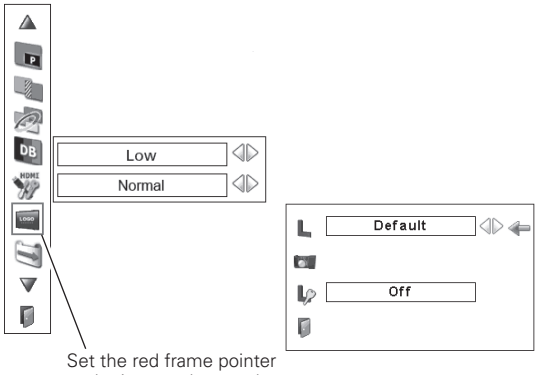

✔ ***Note:***

- *When "On" is selected in the Logo PIN code lock function, Logo select and Capture functions cannot be selected.*

Capture

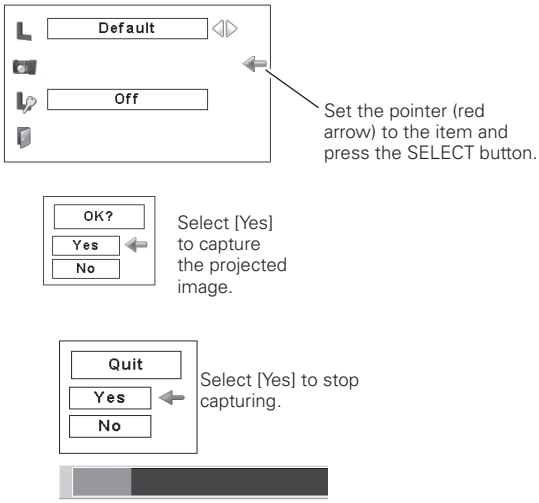

Logo PIN code lock

This function prevents an unauthorized person from changing the screen logo.

Off . . . . The screen logo can be changed freely from the Logo Menu.
On . . . . The screen logo cannot be changed without a Logo PIN code.

If you want to change the Logo PIN code lock setting, press the SELECT button and the Logo PIN code dialog box appears. Enter a Logo PIN code by following the steps below. The initial Logo PIN code is set to "4321" at the factory.

Enter a Logo PIN code

Use the Point ▲▼ buttons on the side control or on the remote control to enter a number. Press the Point ▶ button to fix the number and move the red frame pointer to the next box. The number changes to "✳." Repeat this step to complete entering a four-digit number. After entering the four-digit number, move the pointer to "Set." Press the SELECT button so that you can change the Logo PIN code lock setting.

If you fixed an incorrect number, use the Point ◀ button to move the pointer to the number you want to correct, and then enter the correct number.

If you entered an incorrect Logo PIN code, "Logo PIN code" and the number (✳✳✳✳) will turn red for a moment. Enter the correct PIN code all over again.

Change the Logo PIN code lock setting

Use the Point ◀▶ buttons to switch On/Off, and then press the Point ▼ button to move the pointer to "Quit." Press the SELECT button to close the dialog box.

Change the Logo PIN code

Logo PIN code can be changed to your desired four-digit number. Press the Point ▼ button to select "Logo PIN code change" and then press the SELECT button. The New Logo PIN code input dialog box appears. Set a new Logo PIN code.

Be sure to note the new Logo PIN code and keep it on hand. If you lost the number, you could no longer change the Logo PIN code setting. For details on PIN code setting, refer to "PIN code lock" on pages 58–59.

Logo PIN Code Lock

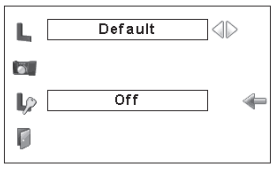

Enter a Logo PIN code

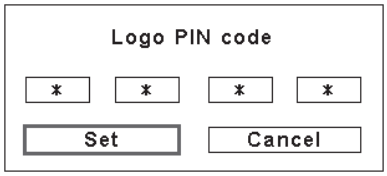

After a correct Logo PIN code is entered, the following dialog box appears.

Change the Logo PIN code lock setting

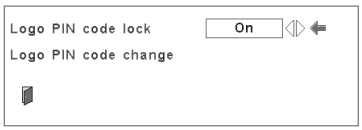

Use the Point ◀▶ buttons to switch On/Off,

Change the Logo PIN code

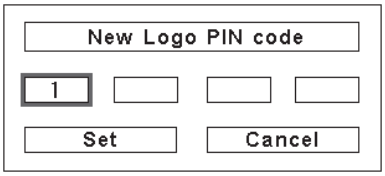

CAUTION:
WHEN YOU HAVE CHANGED THE LOGO PIN CODE, WRITE DOWN THE NEW PIN CODE IN COLUMN OF THE LOGO PIN CODE NO. MEMO ON PAGE 86, AND KEEP IT SECURELY. SHOULD THE LOGO PIN CODE BE LOST OR FORGOTTEN, THE LOGO PIN CODE SETTING CAN NO LONGER BE CHANGED.

Filter control

This function does not work in the default state. When a filter cartridge (supplied) has been installed in the projector, it works as follows:
You can replace the filter with this function. Press the SELECT button at Filter control to display a confirmation box. To replace, press the SELECT button at "YES" and the electrically operated filter starts to scroll.

You can also replace the filter by using the remote control (p.31).

Fan control

Choose the running speed of cooling fans from the following options.
Normal..... Normal speed.
Max ..... Faster than the normal speed.

Remote control

The eight different remote control codes (Code 1–Code 8) are assigned to the projector; the factory-set, initial code (Code 1) and the other seven codes (Code 2 to Code 8).

The same code should be set on both the projector and the remote control. For example, operating the projector in "Code 7", the remote control code also must be switched to "Code 7".

To change the code for the projector;
Select a remote control code in this Setting Menu.

To change the code for the remote control;
Check the Reset Switch to "Use position" in the compartment lid on the back of the remote control.
And then while holding down the MENU button, press and release the IMAGE ADJ. button the number of corresponding times you would like to set the number of the remote control code for the projector. (See page 16)

To reset the code for the remote control;
Slide the Reset Switch to "Reset position" in the compartment lid on back of the remote control.

RC sensor

Select a location of the infrared remote receiver of the remote control. See "Remote Control Receivers and Operating Range" on page 15 for details.

All . . . . . .Activate all of the front, top and back receivers.
Front & Top . . . .Activate the front and top receivers.
Top & Back . . . .Activate the top and back receivers.
Front & Back . . .Activate the front and back receivers.
Front . . . . . .Activate only the front receiver.
Top . . . . . .Activate only the top receiver.
Back . . . . . .Activate only the back receiver.

✔Note:

When a filter cartridge (supplied) has been installed in the projector;

- *Filter replacement icon and "Please wait..." message appear on the screen when the filter is being scrolled.*
- *The filter cannot be rewound.*
- *When the filter is replaced, the total accumulated time of the filter use is automatically set to 0.*
- *If the filter cartridge is not installed in the projector, 'Filter control' is displayed in grayout.*

Remote control

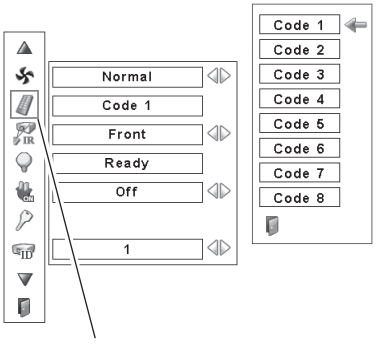

When pressing the SELECT button at Remote control, the Remote control code menu appears.

Power management

For reducing power consumption as well as maintaining the lamp life, the Power management function turns off the projection lamp when the projector is not used for a certain period.

If the input signal is interrupted and no button is pressed for more than 30 seconds, the timer display with "No signal" appears. It starts the countdown until the lamp is turned off. The countdown time can be set between 1 and 30 minutes.
Use the Point ◀▶ buttons to set the countdown timer.

Select one of the following options:

Ready	When the lamp has been fully cooled down, the POWER indicator starts blinking. In this condition, the projection lamp is turned on if the input signal is reconnected or any button on the side control or remote control is pressed .
Shutdown . .	When the lamp has been fully cooled down, the power is turned off.
Off	Power Management function is off.

On start

When this function is set to "On," the projector will be automatically turned on just by connecting the AC power cord to the wall outlet.

✔Note:

- *Make sure that the MAIN ON / OFF switch is ON, otherwise the On start function does not work.*
- *Be sure to turn off the projector properly (see "Turning Off the Projector" on page 25). If the projector is turned off in the incorrect sequence, the On start function does not work properly.*

Power management

Time left before the lamp is off

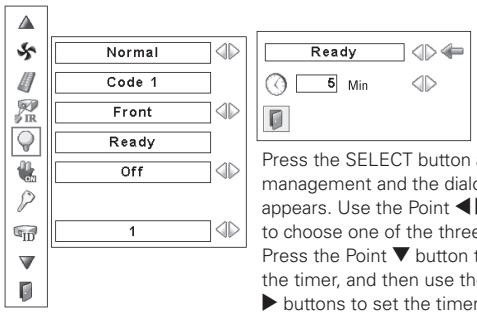

Press the SELECT button at Power management and the dialog box appears. Use the Point ◀▶ buttons to choose one of the three options. Press the Point ▼ button to select the timer, and then use the Point ◀ ▶ buttons to set the timer.

✔Note:

- *Factory default is "Ready: 5 min."*
- *When the shutter is closed while the Power management function is working, the Power management function is released.*

Security

Key lock

This function locks the side control and remote control buttons to prevent operation by unauthorized persons.

. . . . . Unlocked.

. . . . . Lock the side control buttons.
To unlock, use the remote control.

. . . . . Lock the remote control buttons.
To unlock, use the side control.

If the side control accidentally becomes locked and you do not have the remote control nearby and unable to operate the projector, contact the service station.

PIN code lock

This function prevents the projector from being operated by unauthorized persons and provides the following setting options for security.

Off . . . . Unlocked.
On1 . . . Enter the PIN code every time turning on the projector.
On2 . . . Enter the PIN code to operate the projector once the Main On/Off Switch is pressed to Off or the power cord is unplugged ; as long as the AC power cord is connected and the Main On/Off Switch is pressed to ON, the projector can be operated without a PIN code.

Whenever you change the PIN code lock setting or the PIN code (the four-digit number), you are required to enter the PIN code. “1234” is set as the initial PIN code at the factory.

If you want to change the PIN code lock setting, press the SELECT button and the PIN code dialog box appears. Enter a PIN code by following the steps on the next page.

Security

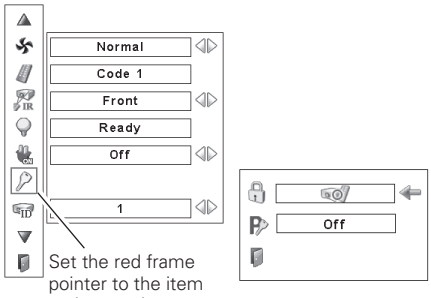

Set the red frame pointer to the item and press the SELECT button.

Key lock

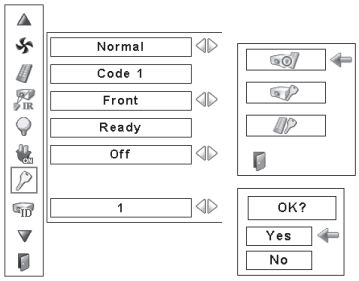

Select Key lock and this box appears. Choose one of the alternatives with the Point ▲▼ buttons and select [Yes] to activate it.

PIN code lock

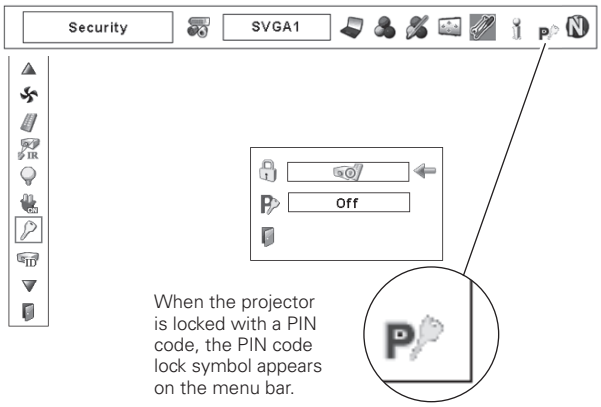

When the projector is locked with a PIN code, the PIN code lock symbol appears on the menu bar.

Enter a PIN code

Use the Point ▲▼ buttons on the side control or on the remote control to enter a number. Press the Point ▶ button to fix the number and move the red frame pointer to the next box. The number changes to "✳." Repeat this step to complete entering a four-digit number. After entering the four-digit number, move the pointer to "Set." Press the SELECT button so that you can change the PIN code lock setting .

If you fixed an incorrect number, use the Point ◀ button to move the pointer to the number you want to correct, and then enter the correct number.

If you entered an incorrect PIN code, "PIN code" and the number (✳✳✳✳) will turn red for a moment. Enter the correct PIN code all over again.

Enter a PIN code

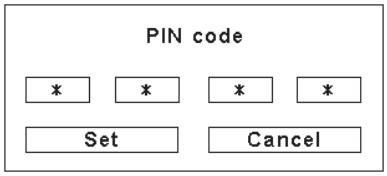

After a correct Logo PIN code is entered, the following dialog box appears.

Change the PIN code lock setting

Use the Point ◀▶ buttons to switch between the options.

Change the PIN Code Lock setting

Use the Point ◀▶ button to select Off, On1, or On2 and then move the pointer to "Quit" with the Point ▼ button. Press the SELECT button to close the dialog box.

Change the PIN Code

The PIN code can be changed to your desired four-digit number. Press the Point ▼ buttons to select "PIN code change" and press the SELECT button. The New PIN code input dialog box appears. Set a new PIN code.

CAUTION:
WHEN YOU HAVE CHANGED THE PIN CODE, WRITE DOWN A NEW PIN CODE IN COLUMN OF THE PIN CODE NO. MEMO ON PAGE 86, AND KEEP IT SECURELY. IF YOU FORGET YOUR PIN CODE, THE PROJECTOR CAN NO LONGER BE STARTED.

Change the PIN code

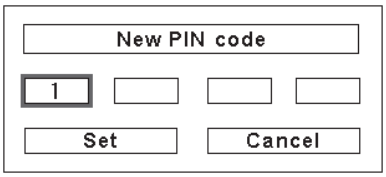

Projector ID

This feature allows users to set serial communication configuration (Projector ID) when several projectors are connected via the RS-232C terminal (serial port) of the projector.

Use the Point ◀▶ buttons to adjust the Projector ID.

- Projector ID ... 1 - 999. (Factory default setting : Projector ID 1)

Shutter

Shutter function is available to block out light to the screen, so that the screen can be used for the other presenters.

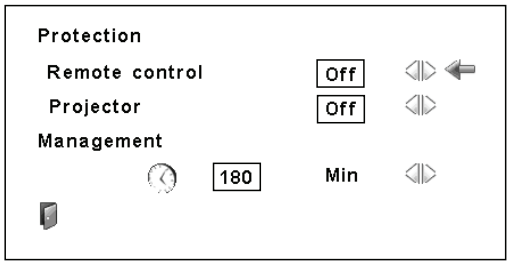

Protection

Prohibits the shutter operation from the remote control and the projector's side control.

Remote control . . . Selecting "On" prohibits the shutter operation from the remote control.
Projector . . . . . Selecting "On" prohibits the shutter operation from the side control.

It is possible to prohibit the shutter operation from both of the remote control and the side control.

Management

The Shutter Management function turns off the projection lamp when the projector is left with the shutter closed and the set time has passed away. The count-down time can be set between 5 and 180 minutes. When the count-down time has elapsed, the shutter will be opened up automatically and the lamp will be turned off to cool itself down. The SHUTTER indicator is blinking blue during this cooling-off period. When the lamp has been fully cooled down, the POWER indicator turns green lighting and the SHUTTER indicator keeps blinking. Should the ON / STAND-BY button be pressed in this condition, the projection lamp will be turned on and the SHUTTER indicator turns off.

✔ ***Note:***
- *The Factory default value is set to 180 minutes for the count down time.*
- *The Shutter Management function cannot be halted.*

Filter counter

This function does not work in the default state. When a filter cartridge (supplied) has been installed in the projector, it works as follows:
This function is used to set a time for the filter replacement.

Use the Point ▲▼ buttons to move the red frame pointer to Filter counter and then press the SELECT button. A dialog box appears showing the Used time option and the Scrolls remaining option.

Used Time . . . . . Show the total accumulated time of the filter use, timer setting option and the Reset options. When the projector reaches a time set in the timer setting, the Filter replacement icon (Fig. 1) appears on the screen and the total accumulated time turns red, indicating that the filter replacement is necessary. If the filter is out of scroll and the projector reaches a time set in the timer setting, Fig. 2 appears on the screen, indicating that the filter cartridge replacement is necessary.

Scrolls remaining . . Show the scroll counter and the Reset options. When the filter scroll is counted down to 1 (Scroll counter on the screen is showing "0 scroll(s)" , the last scroll icon (Fig. 3) appears on the screen. When the filter scroll is counted down to 0, the Filter cartridge replacement icon (Fig. 4) appears on the screen and the WARNING FILTER indicator lights orange, indicating that the filter cartridge replacement is necessary.

To set a timer, press the SELECT button on Used time option. Move the red arrow pointer to the timer setting option and use the Point ◀▶ buttons to select from (Off/1000H/2000H/3000H) depending on the use environment.

When replacing the Filter cartridge, reset the Filter counter and the Scroll counter (p.64).

✔***Note:***
When a filter cartridge (supplied) has been installed in the projector;
- *Do not reset the Filter counter and the Scroll counter without replacing the Filter cartridge. Be sure to reset the Filter counter and the Scroll counter only after replacing the Filter cartridge.*
- *Timer setting notifies that the filter needs replacement. To replace the filter, use the filter control function (p.56).*

Test pattern

Various test patterns are available for use when setting up the projector.

Factory default

This function returns all setting values except for the user logo, PIN code lock, Logo PIN code lock, lamp counter, filter counter and filter timer to the factory default settings.

Quit

Exit the Setting Menu.

Filter counter

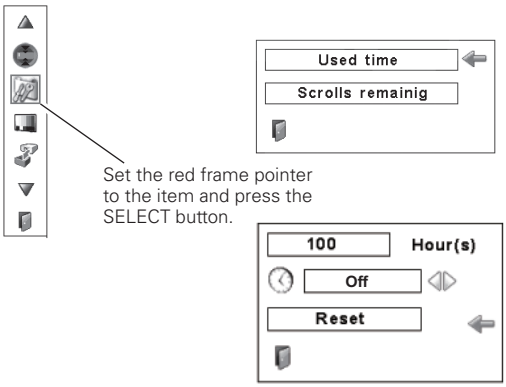

Filter replacement icon appears on the screen at a set time.

Fig.1 Filter replacement icon

Fig.2

Last scroll icon appears on the screen when the filter is down to the last scroll.

Fig.3 Last scroll icon

Filter cartridge replacement icon appears on the screen when the filter scroll is counted down to 0 scroll.

Fig.4 Filter cartridge replacement icon

✔***Note:***
When a filter cartridge (supplied) has been installed in the projector;
- *Fig.1, Fig. 2, Fig. 3 or Fig. 4 will appear at turning on and selecting input source.*
- *Fig.1, Fig. 2, Fig. 3 or Fig. 4 will not appear when the Display function is set to "Off" (p.49), or during "Freeze" (p.30).*
- *If the filter cartridge is not installed in the projector, 'Filter counter' is displayed in grayout.*

Factory default

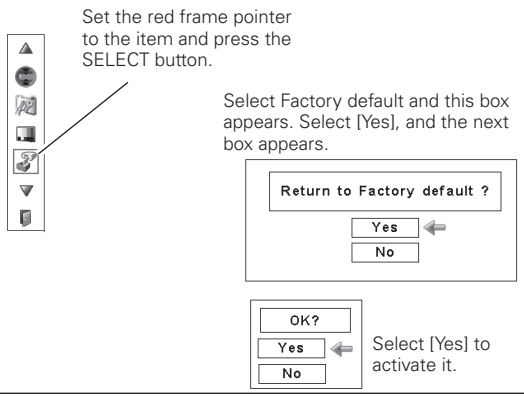

Optional Filter Instructions

Filter prevents dust from accumulating on the optical elements inside the projector. Should the filter becomes clogged with dust particles, it will reduce cooling fans' effectiveness and may result in internal heat buildup and adversely affect the life of the projector. This projector is available with an electrically operated filter (supplied) which helps you to replace the filter easily. The projector monitors the condition of the filter at all time and replaces a filter with a new one automatically when it detects the clogging.

If the projector reaches a time set in the timer setting (pp.60-61), a Filter replacement icon (Fig.1) appears on the screen and the WARNING FILTER indicator on the top panel lights up (p.79). When you see this icon, replace the filter as soon as possible (pp.31, 56). If the filter is out of scroll and the projector reaches a time set in the timer setting, Fig. 2 appears on the screen, indicating that the filter cartridge replacement is necessary.

Fig.1 Filter replacement icon

Fig.2

When the filter scroll is counted down to 1, the Last scroll icon (Fig.3) appears on the screen, indicating that there is one scroll left in the filter cartridge (p.61).

Fig.3 Last scroll icon

If the projector detects that the filter is clogged and no scroll is left in the filter cartridge, a Filter cartridge replacement icon (Fig. 4) appears on the screen and the WARNING FILTER indicator on the top panel lights up (p.79). When you see this icon, replace the filter cartridge (p.63) and reset the Filter counter (p.64) and the Scroll counter (p.64).

Fig.4 Filter cartridge replacement icon

When the filter is being scrolled by the remote control (p.31) or the Filter control function in the setting menu (p.56), a Filter replacement icon and "Please wait..." message (Fig.5) appear on the screen and the WARNING FILTER indicator blinks slow (approx. 2 seconds ON, 2 seconds OFF) (p.77).

Fig.5 Filter replacement icon and "Please wait..." message.

The WARNING FILTER indicator blinks fast when the projector detects an abnormal condition, the filter cartridge is not installed properly, or the filter scroll is not working properly (p.79).

✔ ***Note:***

- *Fig.1, Fig.2, Fig.3 or Fig. 4 will not appear when the Display function is set to "Off" (p.49), or during "Freeze" (p.30).*
- *The filter cannot be rewound.*
- *The filter can be scrolled 9 times since the filter cartridge has 10 scrolls.*
- *The filter cartridge is disposable. Do not clean and reuse the filter cartridge.*
- *Do not expose the filter cartridge to water or liquid, or it may cause a breakdown.*
- *Replace the filter cartridge after all the scroll is used up. If you replace the filter cartridge when there are some scrolls left in the filter cartridge, the filter counter and the scroll counter do not recognize the correct number of remaining scrolls and the reset function cannot work properly. It may cause a breakdown.*
- *The used part of the filter can be seen on the edge of the Filter cartridge after scrolling the filter, but there is no problem for the use of the projector.*
- *Do not use the filter cartridge with other projector. The filter counter and the scroll counter do not recognize the correct number of remaining scrolls of the used filter cartridge and the reset function cannot work properly. It may cause a breakdown.*
- *Make sure that the projection lamps are turned off when you are replacing the filter cartridge. If you replace the filter cartridge when the projection lamps are turned on, the projector will be shut down automatically for safety purposes.*
- *Do not forget to reset the filter counter and the scroll counter in the setting menu after replacing the filter cartridge. If you forget to reset the filter counter and the scroll counter, the projector cannot recognize the correct number of remaining scrolls and it may cause a breakdown.*
- *When the projector is kept used for 3 minutes without getting the filter cartridge replaced after the Fig.4 appears on the screen, the projector is turned off automatically to prevent the damage of optical components.*

Installing the Filter Cartridge

1 Turn off the projector, press the Main On/Off Switch to Off and unplug the AC power cord from the AC outlet.

2 First, clean up the dust on the projector and around the air vents.

3 Open the filter cover. (See the right figure.)

4 Put a filter cartridge into the position and close the filter cover. Make sure that the filter cartridge is properly and fully inserted.

5 Connect the AC power cord to the projector and turn on the projector.

6 **Reset the filter counter and the scroll counter** (p.64).

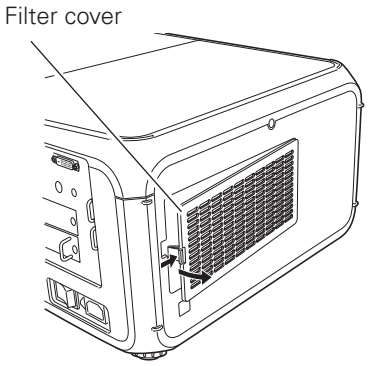

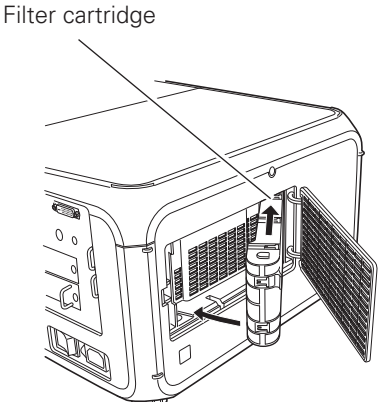

CAUTION
- Do not put anything into the air vents. Doing so may result in malfunction of the projector.
- In the event of installation/replacement of the filter cartridge, turn off the projector, press the Main On/Off Switch to Off and unplug the AC power cord from the AC outlet.

RECOMMENDATION

We recommend avoiding dusty/smoky environments when operating the projector. Usage in these environments may cause a poor image quality.

When using the projector under dusty or smoky conditions, dust may accumulate on a lens or optical elements inside the projector. Such condition may degrade the quality of the projected image. When the symptoms above are noticed, contact your authorized dealer or service station for proper cleaning.

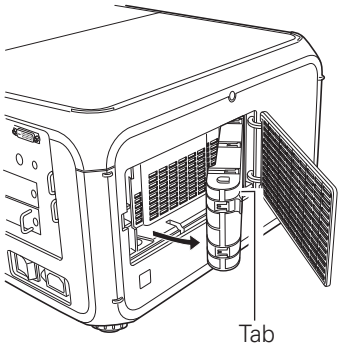

✔ ***Note:***

•When taking out the filter cartridge, put your finger on the filter cartridge's tab and then pull.

ORDER REPLACEMENT FILTER CARTRIDGE

Replacement filter cartridge can be ordered through your dealer. When ordering, give the following information to the dealer.

- **Model No. of your projector**
  DS+750
- **Replacement Filter Cartridge Type No.**
  003-001726-01 **(Service Parts No. 610 334 3747)**

Resetting the Filter Counter

This function does not work in the default state. When a filter cartridge (supplied) has been installed in the projector, it works as follows:
Be sure to reset the Filter counter after replacing the filter cartridge.

1 Press the MENU button to display the On-Screen Menu. Use the Point ◀▶ buttons to move the red frame pointer to the Setting Menu icon.

2 Use the Point ▲▼ buttons to move the red frame pointer to Filter counter and then press the SELECT button.
A dialog box appears showing the Used time option and the Scrolls remaining option. Use the Point ▲▼ buttons to select Used time.

3 Used time shows the total accumulated time of the filter use, a timer setting option, and the Reset option. Select Reset and the "Filter counter Reset?" appears. Select [Yes] to continue.

4 Another confirmation dialog box appears, select [Yes] to reset the Filter counter.

Filter counter

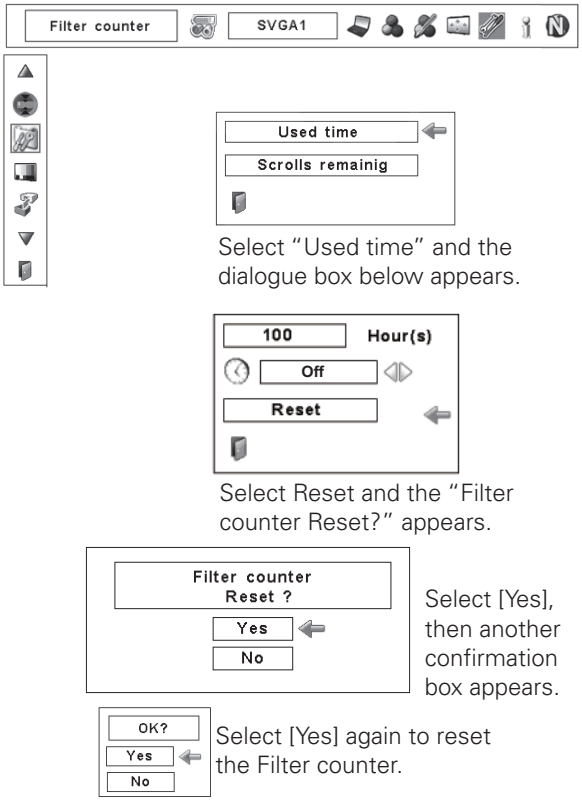

Resetting the Scroll Counter

This function does not work in the default state. When a filter cartridge (supplied) has been installed in the projector, it works as follows:
Be sure to reset the Scroll counter after replacing the filter cartridge.

1 Press the MENU button to display the On-Screen Menu. Use the Point ◀▶ buttons to move the red frame pointer to the Setting Menu icon.

2 Use the Point ▲▼ buttons to move the red frame pointer to Filter counter and then press the SELECT button. A dialog box appears showing the Used time option and the Scrolls remaining option. Use the Point ▲▼ buttons to select Scroll(s) remaining.

3 Scroll(s) remaining shows the number of the remaining scrolls and the Reset option. Select Reset and the "Scroll counter Reset?" appears. Select [Yes] to continue.

4 Another confirmation dialog box appears, select [Yes] to reset the Scroll counter.

Scroll counter

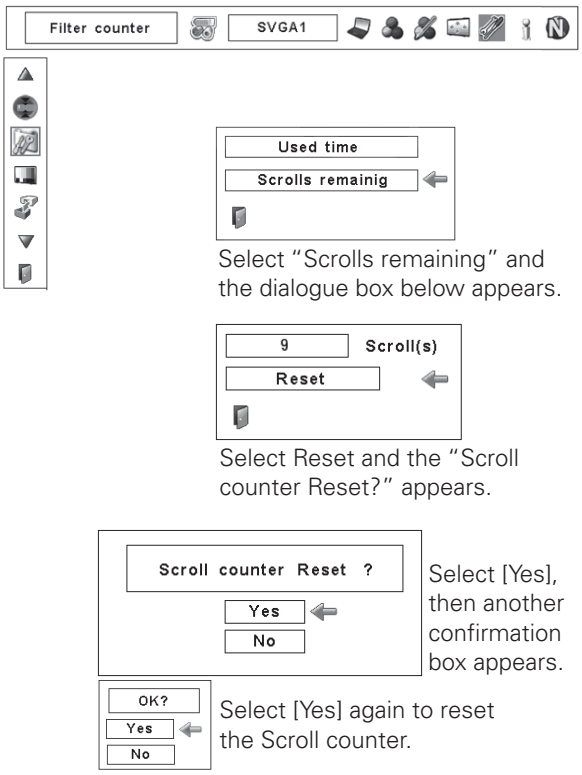

Lamp Management

This Projector is equipped with 2 Projection Lamps to ensure brighter image and those lamps are controlled by the Lamp Management Function. The Lamp Management Function detects the status of lamps and shows the status on screen or on the LAMP 1/2 REPLACE indicators. This function also automatically controls the Lamp Mode when any of lamps is out for the end of life or malfunctions.

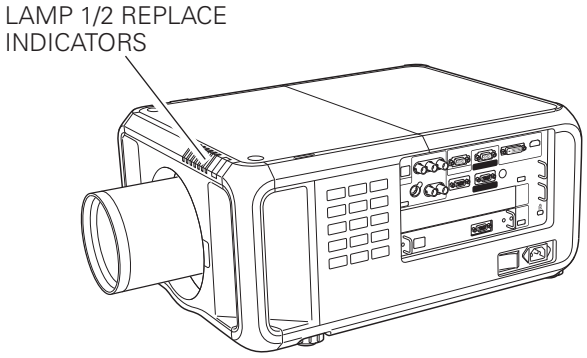

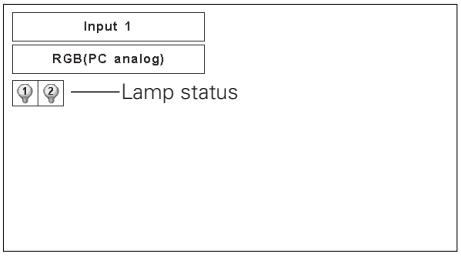

Lamp 1/2 Replace Indicators

The LAMP 1/2 REPLACE indicators light orange when any of Projection Lamps is nearing its end, and flash when any of them becomes out. Check the number of lamp on the Lamp Status Display or the LAMP 1/2 REPLACE indicators and replace the lamp.

Lamp Status Display

The Lamp Status Display appears on screen when the projector is turned on or the input position (input 1, input 2, Input 3 or input 4) is switched. This shows the status of each lamp as; ON, OFF, NEAR END, or OUT. Refer to the following for each status.

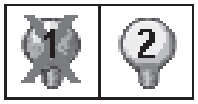

LAMP STATUS DISPLAY

Yellow Lamp – – – – – – Projection Lamp lights normally.

Dim Lamp – – – – – – – – Projection Lamp is turned off.

Red Lamp – – – – – – – – Projection Lamp is nearing its end. When the image becomes darker or the color becomes unnatural, replace lamp. (LAMP 1/2 REPLACE indicator lights orange.)

X Mark on Lamp – – – – – (LAMP 1/2 REPLACE indicator flashes orange.) Projection lamp is defective or fails to be turned on. Restart the projector on, and make sure lamp is on. If this mark still appears, replace lamp corresponding with number marked X.

Lamp Mode Changeover

The Lamp Management Function automatically changes the lighting lamp (Lamp Mode) by detecting the status of lamp. When either of the 2 lamps is out, the projector operates with 1 lamp. The Lamp Mode can be switched to 2 lamps or 1 lamp manually. Refer to the SETTING section on page 50.

2 LAMP MODE

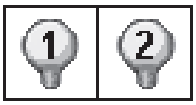

1 LAMP MODE

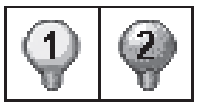

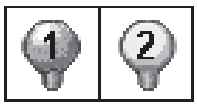

When Lamp 1 is burnt out.

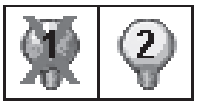

When Lamp 2 is burnt out.

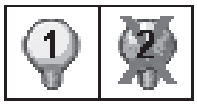

Lamp Replacement

When the projection lamp of the projector reaches its end of life, the Lamp replacement icon appears on the screen and LAMP 1/2 REPLACE indicator lights orange. Replace the lamp with a new one promptly. The timing when the LAMP 1/2 REPLACE indicators should light is depending on the lamp mode.

Indicators

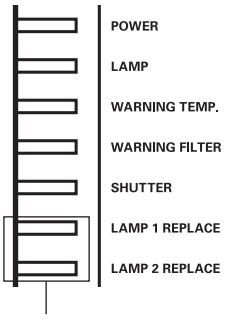

LAMP 1 / 2 REPLACE indicators

Lamp replacement icon

✔ ***Note:***

- *The Lamp replacement icon will not appear when the Display function is set to "Off" (p.49), or during "Freeze" (p.30).*

WARNING:

TURN OFF THE UV LAMP BEFORE OPENING THE LAMP COVER.

Allow the projector to cool, for at least 45 minutes before you open Lamp Cover. The inside of the projector can become very hot.

CAUTION

For continued safety, replace with a lamp assembly of the same type.
Do not drop the lamp assembly or touch a glass bulb! The glass can shatter and may cause injury.

Follow these steps to replace the lamp.

1. Check the number of lamp to be replaced on the Lamp Status Display.
2. Turn off the projector, press the Main On/Off Switch to Off and unplug the AC power cord from the AC outlet. Let the projector cool for at least 45 minutes.
3. Loosen a screw on the Lamp Cover. Slide and open the Lamp Cover. (See the right figure.)
4. Loosen two screws and pull out the Lamp to be replaced by grasping handle.
5. Replace the Lamp with a new one and tighten two screws. Make sure the Lamp is set properly.
6. Put the Lamp Cover back and tighten a screw.

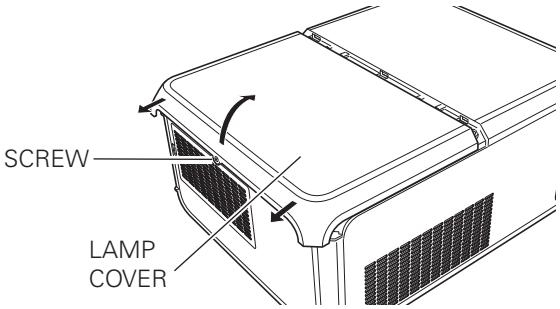

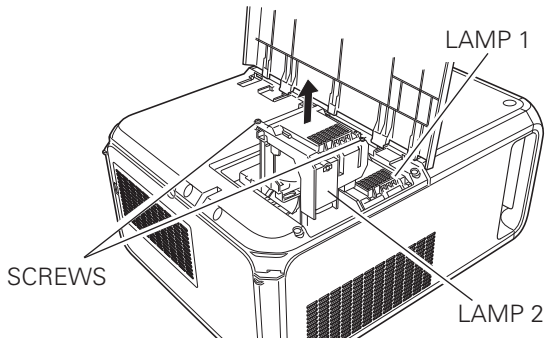

Make sure which number of lamp needs to be replaced on Lamp Status Display.
Figure shows case of replacing LAMP 2.

CAUTION : DO NOT OPERATE THE PROJECTOR WHILE ANY OF LAMPS IS REMOVED. IT MAY RESULT IN MALFUNCTIONS, FIRE HAZARD, OR OTHER ACCIDENTS.

NOTES ON LAMP REPLACEMENT

To maintain quality of picture (better balance of color and brightness in entire screen), we recommend replacing both 2 lamps at a time.

ORDER REPLACEMENT LAMP

Replacement Lamp can be ordered through your dealer. When ordering a Projection Lamp, give the following information to the dealer.

- **Model No. of your projector : DS+750**
- **Replacement Lamp Type No. : 003-120504-01**
  (Service Parts No. 610 343 5336)

LAMP HANDLING PRECAUTIONS

This projector uses a high-pressure lamp which must be handled carefully and properly.
Improper handling may result in accidents, injury, or create a fire hazard.

- Lamp lifetime may differ from lamp to lamp and according to the environment of use. There is no guarantee of the same lifetime for each lamp. Some lamps may fail or terminate their lifetime in a shorter period of time than other similar lamps.

- If the projector indicates that the lamp should be replaced, i.e., if the LAMP 1/2 REPLACE indicators light up, replace the lamp with a new one IMMEDIATELY after the projector has cooled down. (Follow carefully the instructions in the Lamp Replacement section of this manual.) Continuous use of the lamp with the LAMP 1/2 REPLACE indicators lighted may increase the risk of lamp explosion.

- Lamp may explode as a result of vibration, shock or degradation as a result of hours of use as its lifetime draws to an end. Risk of explosion may differ according to the environment or conditions in which the projector and lamp are being used.

IF A LAMP EXPLODES, THE FOLLOWING SAFETY PRECAUTIONS SHOULD BE TAKEN.

If a lamp explodes, disconnect the projector's AC plug from the AC outlet immediately. Contact an authorized service station for a checkup of the unit and replacement of the lamp. Additionally, check carefully to ensure that there are no broken shards or pieces of glass around the projector or coming out from the cooling air circulation holes. Any broken shards found should be cleaned up carefully. No one should check the inside of the projector except those who are authorized trained technicians and who are familiar with projector service. Inappropriate attempts to service the unit by anyone, especially those who are not appropriately trained to do so, may result in an accident or injury caused by pieces of broken glass.

Optional Color Wheel Installation

The projector comes with the high brightness color wheels installed. Additional rich color reproduction color wheels are supplied. To replace the color wheels, refer to the following steps.

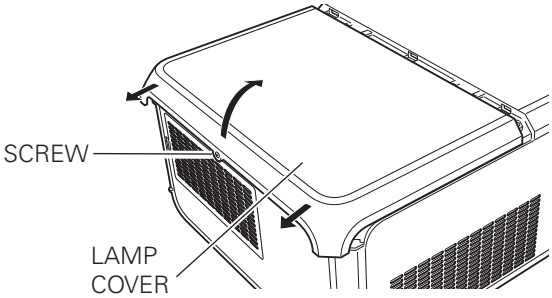

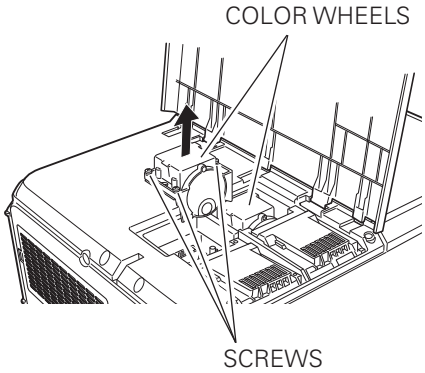

1. Turn off the projector, press the Main On/Off Switch to Off and unplug the AC power cord from the AC outlet. Let the projector cool for at least 45 minutes.
2. Loosen a screw on the Lamp Cover. Slide and open the Lamp Cover. (See the right figure.)
3. Loosen three screws and pull out the color wheel to be replaced by grasping handle.
4. Replace the color wheel with a new one and tighten three screws. Make sure the color wheels are set properly.
5. Put the Lamp Cover back and tighten a screw.

✔Note:

- *Wait until the lamp house and the color wheel cool off.*
- *Make sure to install the same type of two color wheels at the same time. When different types of color wheels are installed, 'Non-matching color wheels!' message appears on the screen.*

Allow the projector to cool, for at least 45 minutes before you open Lamp Cover. The inside of the projector can become very hot.

Cleaning the Projection Lens

Turn off the projector, press the Main On/Off Switch to Off and unplug the AC power cord from the AC outlet before cleaning.

Gently wipe the projection lens with a cleaning cloth that contains a small amount of non-abrasive camera lens cleaner, or use a lens cleaning paper or commercially available air blower to clean the lens.

Avoid using an excessive amount of cleaner. Abrasive cleaners, solvents, or other harsh chemicals might scratch the surface of the lens.

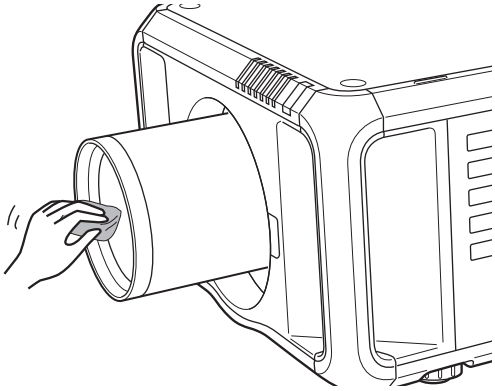

Cleaning the Projector Cabinet

Turn off the projector, press the Main On/Off Switch to Off and unplug the AC power cord from the AC outlet before cleaning.

Gently wipe the projector body with a soft dry cleaning cloth. When the cabinet is heavily soiled, use a small amount of mild detergent and finish with a soft dry cleaning cloth. Avoid using an excessive amount of cleaner. Abrasive cleaners, solvents, or other harsh chemicals might scratch the surface of the cabinet.

When the projector is not in use, put the projector in an appropriate carrying case to protect it from dust and scratches.

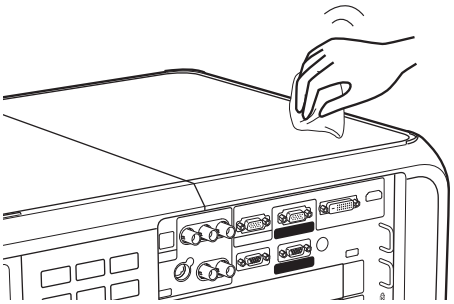

CAUTION
Do not use any flammable solvents or air sprays on the projector and in its vicinity. The explosion or fire hazard may occur even after the AC power cord is unplugged because the temperature inside the projector is extremely high due to the lamps.
In addition, there is a risk that the internal parts may be damaged not only by the flammable air spray but also by the cold air.

Warning Indicators

The WARNING indicators show the state of the function which protects the projector. Check the state of the WARNING TEMP. indicator and the LAMP indicator to take proper maintenance.

The projector is shut down and the WARNING TEMP. indicator is blinking red.

When the temperature inside the projector reaches a certain level, the projector will be automatically shut down to protect the inside of the projector. The LAMP indicator turns red brighter and the WARNING TEMP indicator blinks while the projector is being cooled down. When the projector has cooled down enough (to its normal operating temperature), it can be turned on again by pressing the ON/STAND-BY button.

✔ ***Note:***

- *The WARNING TEMP. indicator continues to blink even after the temperature inside the projector returns to normal. When the projector is turned on again, the WARNING TEMP. indicator stops blinking.*

Indicators

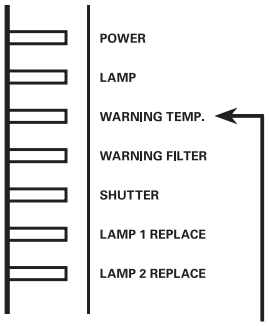

WARNING TEMP. blinking red

Then check the matters below:

– Did you provide appropriate space for the projector to be ventilated? Check the installing condition to see if the air vents of the projector are not blocked.
– Has the projector been installed near an Air-Conditioning/Heating Duct or Vent? Move the installation of the projector away from the duct or vent.

The projector is shut down; and the LAMP indicator is lighting and other indicators are blinking.

When the projector detects an abnormal condition, it will be automatically shut down to protect the inside of the projector and the LAMP indicator lights on and other indicators blink. In this case, unplug the AC power cord and plug it, and then turn on the projector once again to verify operation. If the projector cannot be turned on and these indicators are still lighting and blinking, unplug the AC power cord and contact the service station.

Indicators

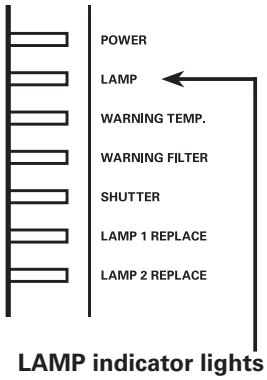

LAMP indicator lights on and other indicators blink.

CAUTION
DO NOT LEAVE THE PROJECTOR WITH THE AC POWER CORD CONNECTED UNDER AN ABNORMAL CONDITION. IT MAY RESULT IN FIRE OR ELECTRIC SHOCK.

Troubleshooting

Before calling your dealer or service center for assistance, check the items below once again.

1. Make sure you have properly connected the projector to peripheral equipment as described on pages 20–21.
2. Check the cable connection. Make sure that all computers, video equipment, and power cords are properly connected.
3. Make sure that all power is switched on.
4. If the projector still does not produce an image, restart your computer.
5. If an image still does not appear, disconnect the projector from your computer and check your computer monitor's display. A problem may be noticed with your graphics controller rather than with the projector. (When you reconnect the projector, be sure to turn the computer and monitor off before you turn on the projector. Turn on equipment in the order of the projector and computer.)
6. If a problem still persists, check the following solutions.

Problem:	Solutions
No power.	– Plug the power cord of the projector into the AC outlet. – Turn the MAIN ON/OFF switch to ON. – Press the ON/STAND-BY Button to ON. – Make sure the POWER indicator lights. – Check the indicators. If the LAMP indicator lights and the other indicators blink, the projector cannot be turned on. (Refer to page 70.) – Check the projection lamp. (Refer to page 66.)
PIN code dialog box appears at start-up.	– PIN code lock is being set. Enter a PIN code; the "1234" or numbers you have set (see pages 24, 58-59)
The initial display is not shown.	– Make sure "Off " or "Countdown Off" are not chosen at Display function. (See "SETTING" section on page 49)
The initial display is not same with the default one.	– Make sure "User" or "Off" are not chosen at Logo select function. (See "SETTING" section on page 54)
An icon other than Input mode or Lamp mode icon appears.	– That is the Lamp replacement icon. See page 66.
No image.	– Check the connection between your computer or video equipment and the projector. – See if the input signal is correctly output from your computer. Some laptop computers may need to be changed the setting for monitor output when connected to the projector. See your computer's instruction manual for the setting. – It takes about 20 seconds to display an image after turning on the projector. – See if the selected system is corresponding with your computer or video equipment. – Select correct input source once again through menu operation (See pages 32, 42). – Make sure the temperature is not out of Operating Temperature (41˚F–104˚F [5˚C–40˚C]).

appears on the screen	– The end of lamp life is approaching. Replace the lamp with a new one promptly. (See page 66)
appears on the screen	When a filter cartridge (supplied) has been installed in the projector; – The filter is out of scroll. Replace the filter cartridge with a new one promptly. (See pages 62-63)
The image is out of focus.	– Adjust the focus of the projector. – Check Projection Lens to see if it needs cleaning. ✔***Note:*** Moving the projector from a cool temperature location to a warm temperature location may result in moisture condensation on Projection Lens. In such cases, leave the projector OFF and wait until condensation evaporates. – Projecting from excessive slant angle to the screen may cause keystone distortion and partial imperfect focus.
The image is not bright enough.	– Check if "Contrast" or "Brightness" are adjusted properly. (See page 46) – Check if "Image level" is selected properly. (See pages 39, 43) – Check the Lamp control function. (See "SETTING" section on page 50) – Check the Lamp 1/2 replace indicators. If it lights, the end of lamp life is approaching. Replace the lamp with a new one promptly. (See page 66) – The image is darker when 1 lamp mode is selected, compared with 2 lamp mode. Check the lamp mode at SETTING section on page 50.
The color is strange.	– Check the Input signal, color system, video system, or computer system mode.
The image is Left/Right reversed.	– Check the Ceiling / Rear function. (See pages 41, 45)
The image is Top/Bottom reversed.	– Check the Ceiling function. (See pages 41, 45)
The image is distorted or runs off.	– Check "PC Adjust" menu or " Screen" menu and adjust them.
Auto PC adjustment function does not work.	– Check the Input signal. Auto PC Adjustment function cannot work when 480p, 575p, 720p, 480i, 575i, 1035i, 1080p, or 1080i is selected or when the digital signal is input into DVI terminal. (See page 36)
Some displays are not seen during the operation.	– Check the Display function (see page 49).
The setting does not remain after turning off power.	– Make sure you selected "Store" after adjusting settings. Some settings cannot be stored if not registered with "Store".
Power management function does not work.	– Power management function cannot work while "Freeze" function is running or the shutter is closed.
Image disappears automatically.	– Check the power management function in the Setting. The power management is set to "On" at the factory.
Capture function does not work.	– Check the connection to see if there is signal.
Some menus cannot be selected.	– Each of the Video Input and Computer Input has a limit on selectable menus.

The power is turned off automatically.	– Power management function runs by initial setting. Check "SETTING" section on page 57.
You cannot operate with the side control.	– The side control is not available If the side control is locked at "Key lock" under "Security" of SETTING section. Please check "SETTING" section on page 58.
The Remote Control does not work.	– Check the batteries. – Check if the RC sensor is set properly. (See page 56) – Make sure no obstruction is between the projector and remote control. – Make sure you are not too far from the projector when using the remote control. Maximum operating range is 16.4' (5m). – Make sure that the remote control code conforms to the projector's code. (See "SETTING" section on page 56.) – Make sure the reset switch in the compartment lid on back of the remote control is set to use position. – Unlock the Key lock function for the remote control. (See page 58) – Wireless remote control does not work when the remote control cable is connected to the projector. (See page 15)
Indicators blinks or lights.	– Check the status of the projector with referring to " INDICATORS AND PROJECTOR CONDITION" on pages 77-79.
 appears on the screen	– Your operation is invalid. Operate correctly.
Unable to unlock the Logo PIN code lock, Security key lock or Security PIN code lock.	– Contact the dealer where you purchased the projector or the service center.
Forget the Logo PIN code or Security PIN code.	– Contact the dealer where you purchased the projector or the service center.

WARNING:
High voltages are used to operate this projector. Do not attempt to open the cabinet.

If problems still persist after following all operating instructions, contact the dealer where you purchased the projector or the service center. Specify the model number and explain about the problem. We will advise you how to obtain service.

This symbol on the nameplate means the product is Listed by Underwriters Laboratories Inc. It is designed and manufactured to meet rigid U.L. safety standards against risk of fire, casualty, and electrical hazards.

The CE Mark is a Directive conformity mark of the European Community (EC).

Menu Tree

Computer Input/Video Input

- **Input**
  - Input 1
    - RGB (PC analog) → Go to **System** (1)
    - RGB (Scart)
    - RGB (PC digital) → Go to **System** (1)
    - RGB (AV HDCP) → Go to **System** (1)
    - HDMI → Go to **System** (1)
  - Input 2
    - RGB → Go to **System** (1)
    - Y, Pb/Cb,Pr/Cr → Go to **System** (3)
    - Video → Go to **System** (2)
    - S-video → Go to **System** (2)
  - Input 3 (For Optional Interface Boards)
  - Input 4 (For Optional Interface Boards)

Information

- **Information**
  - Input
  - H-sync freq.
  - V-sync freq.
  - Screen
  - Language
  - Lamp mode
  - Lamp control
  - Lamp interval
  - Lamp 1
  - Lamp 2
  - Filter counter
  - Power management
  - Security
    - Key lock
    - PIN code lock
  - Remote control
  - Shutter management
    - Remote Control
    - Projector
    - 5 - 180 Min
  - Color wheel type
  - Lens type
  - SERIAL NO.

Image Adjust

- **Image Adjust**
  - Contrast — 0–63
  - Brightness — 0–63
  - Color ✻ — 0–63
  - Tint ✻ — 0–63
  - Color management
    - Color
    - Gamma
    - List
    - Color M.
    - Menu
      - All Del
      - Menu
      - Color M.
  - Auto picture control — Off/L1/L2
  - BrilliantColor — Off/On
  - Color temp.
    - XLow
    - Low
    - Mid
    - High
    - Adj.
    - Blue base (for DICOM)
    - Clear base (for DICOM)
  - Red — 0–63
  - Green — 0–63
  - Blue — 0–63
  - Offset — Red/Green/Blue/Quit
  - Sharpness — 0–31
  - Gamma — 0–15
  - Noise reduction ✻ — Off/On
  - Progressive ✻ — Off/On/Film
  - Reset — Yes / No
  - Store
    - Image 1
    - Image 10
    - Quit
  - Quit

✻ *Displayed in grayout in the computer Input.*

Network

- **Network**
  - Network — Off/On
  - Network PIN code

✔ ***Note:***

- *The Menu display varies depending on the input signal.*

Computer Input

SVGA1

System (1)
- Mode 1
- Mode 2
- SVGA 1
- SVGA 2
- SVGA 3

✻ System displayed in the System Menu varies depending on the input signal.

Image Select
- Standard
- Real
- Dynamic
- DICOM
- Image 1
- Image 10

PC Adjust
- Auto PC adj.
- Fine sync. — 0–31
- Total dots
- Position H
- Position V
- Current mode
  - H-sync freq.
  - V-sync freq.
  - Quit
- Clamp
- Display area - H
- Display area - V
- Reset — Yes/No
- Mode free
- Store
  - Mode 1
  - Mode 10
  - Quit
- Quit

Screen
- Normal
- True
- Wide
- Full screen
- Custom
  - Scale — H / V
  - H & V — On/Off
  - Position — H / V
  - Common
  - Reset
  - Quit
- Digital zoom +
- Digital zoom -
- Keystone
  - Store
  - Reset
- Ceiling — On/Off
- Rear — On/Off
- Reset — Yes/No
- Quit

Video Input

Auto

System (2)
- Auto
- PAL
- SECAM
- NTSC
- NTSC 4.43
- PAL-M
- PAL-N

Auto

System (3)
- Auto
- 1080p
- 1080i
- 1035i
- 720p
- 575p
- 480p
- 575i
- 480i

Image Select
- Standard
- Cinema
- Dynamic
- DICOM
- Image 1
- Image 10

Screen
- Normal
- Wide
- Custom
  - Scale — H / V
  - H & V — On/Off
  - Position — H / V
  - Common
  - Reset
  - Quit
- Keystone
  - Store
  - Reset
- Ceiling — On/Off
- Rear — On/Off
- Reset — Yes/No
- Quit

✔ ***Note:***

•The Menu display varies depending on the input signal.

Computer Input/Video Input

Setting

- Language
  - 12 languages provided.
  - Quit
- Menu — Position/Simple Menu/Menu size/Quit
- Display — Off/Countdown Off/On
- Background — Blue/User/Black
- Lamp mode — 2-Lamps/Lamp1/Lamp2
- Lamp control
  - Lamp control — Normal/Eco1/Eco2
  - Lamp life control — Mode 1/Mode 2
- Lamp interval — Off/Auto/24H/200H/500H/1000H/2000H
- Picture in Picture
  - Off/User1-5
  - Main Picture/Sub picture
    - Input1-4
    - Size
    - Position
  - Frame lock — Main picture/Sub picture
  - Store — Yes/No
  - Reset — Yes/No
  - Mode free — Yes/No
  - Quit
- Edge blending
  - On/Off
  - Left/Right width — 0-700
  - Top/Bottom width — 0-525
  - Black level
    - All
    - R/G/B — ± 127
  - Test pattern — On/Off
  - Reset — Yes/No
  - Quit
- Color matching
  - On/Off
  - Red/Green/Blue/White — 0.000-1.000
  - Auto test pattern — On/Off
  - Reset — Yes/No
  - Store — Yes/No
  - Advanced color matching
    - Advanced color matching — On/Off
    - Measured
      - Measured information
      - Red/Green/Blue/Half white/White or Red/Green/Blue/White
    - Target — Red/Green/Blue/Cyan/Magenta/Yellow/White
    - Auto Test pattern — On/Off
    - Factory default — Yes/No
    - Reset — Yes/No
    - Store — Yes/No
    - Test pattern — (Measured) Red/Green/Blue/Half white/White or (Measured) Red/Green/Blue/White (Target) Red/Green/Blue/Cyan/Magenta/Yellow/White
    - Quit
  - Quit
- DynamicBlack — Off/Low/High
- HDMI setup — Normal/Enhanced
- Logo
  - Logo select — Off/Default/User
  - Capture — Yes/No
  - Logo PIN code lock
    - On/Off
    - Logo PIN code change
    - Quit
  - Quit
- Filter control ✻ — Yes/No
- Fan control — Normal/Max
- Remote Control
  - Code 1
  - Code 8
  - Quit
- RC sensor — All/Front & Top/Top & Back/Front & Back/ Front/Top/Back
- Power management
  - Off/Ready/Shut down
  - 1–30 Min.
  - Quit
- On start — On/Off
- Security
  - Key lock
    - Off
    - Projector
    - Remote Control
  - PIN code lock
    - Off/On1/On2
    - PIN code change
    - Quit
  - Quit
- Projector ID — 1–999
- Shutter
  - Protection
    - Remote control — On / Off
    - Projector — On / Off
  - Management — 5 - 180 Min.
  - Quit
- Filter counter ✻
  - Used time
    - [ ] Hour(s)
    - Off/1000H/2000H/3000H
    - Reset — Yes/No
    - Quit
  - Scrolls remaining
    - Scroll(s)
    - Reset — Yes/No
    - Quit
  - Quit
- Test pattern
  - 8 test patterns provided
  - Quit
- Factory default — Yes/No
- Quit

✻ *Displayed in grayout when the filter cartridge (supplied) has not been installed in the projector.*

Indicators and Projector Condition

Check the indicators for the projector condition.

The projector is operating normally.

Indicators						Projector Condition
POWER **green**	LAMP **red**	WARNING TEMP. **red**	WARNING FILTER **orange**	SHUTTER **blue**	LAMP 1/2 REP. **orange**	
●	●	●	●	●	●	The projector is off. (The main On/Off switch is OFF position or the AC power cord is unplugged.)
○	○	●	✻	✻	✻	The projector is in stand-by mode. Press the ON/STAND-BY button to turn on the projector.
○	◐	●	✻	●	✻	The projector is operating normally. (The Shutter is open)
○	◐	●	✻	○	✻	The projector is operating normally. (The Shutter is closed)
●	○	●	✻	✻	✻	The projector is preparing for stand-by or the projection lamp is being cooled down. The projector cannot be turned on until cooling is completed and the POWER indicator lights green.
●	◐	●	✻	●	✻	The projection lamp is being cooled down in the Power management mode.
⚡○	◐	●	✻	●	✻	The projector is in the Power management mode.
●	◐	●	✻	⚡○	✻	The projection lamp is being cooled down in the Shutter management mode.
○	◐	●	✻	⚡○	✻	The projector is in the Shutter management mode. Press the ON/STAND-BY button to turn on the projector.
○	✻	●	⚡◎	✻	✻	The filter is scrolled using the FILTER button on the remote control or the Filter control function in the setting menu. When the filter is being scrolled, the Filter replacement icon and "Please wait..." message (Fig. 1) appear on the screen.

Fig.1 Filter replacement icon and "Please wait..."

○ • • • on

◐ • • • dim

● • • • off

⚡○ • • • blinking at the normal rate (approx. 1 second ON, 1 second OFF)

⚡ • • • blinking fast (approx. 0.5 seconds ON, 0.5 seconds OFF)

⚡◎ • • • blinking slow (approx. 2 seconds ON, 2 seconds OFF)

✻ • • • Differs according to conditions.

✔ ***Note:***

- *WARNING FILTER indicator does not work in the default state. It works when a filter cartridge (supplied) has been installed in the projector.*

The projector is detecting abnormal condition.

Indicators						Projector Condition
POWER **green**	LAMP **red**	WARNING TEMP. **red**	WARNING FILTER **orange**	SHUTTER **blue**	LAMP 1/2 REP. **orange**	
○	●	◎	*	*	*	The temperature inside the projector is elevated close to the abnormally high level.
●	○	⊘	*	*	*	The temperature inside the projector is abnormally high. The projector cannot be turned on. When the projector is cooled down enough and the temperature returns to normal, the POWER indicator lights green and the projector can be turned on. (The WARNING TEMP. indicator keeps blinking.)
○	○	⊘	*	*	*	The projector has been cooled down enough and the temperature returns to normal. When turning on the projector, the WARNING TEMP. indicator stops blinking.
●	○	●	*	*	○	The lamp cannot light up. (The projector is preparing for stand-by or the projection lamp is being cooled down. The projector cannot be turned on until cooling is completed.)
○	○	●	*	*	○	The lamp cannot light up. (The lamp has been cooled down enough and the projector is in stand-by mode and ready to be turned on with the ON/STAND-BY button.)
○	●	*	*	*	○	When either of the 2 lamps is out, the projector operates with 1 lamp.
*	*	*	*	*	○	The lamp has been used overtime. Replace the lamp immediately.

WARNING FILTER

When the filter detects clogging, reaches a time set in the timer setting or runs out of the filter scroll, the WARNING FILTER indicator lights orange. When this indicator lights orange, replace the filter or the filter cartridge with a new one promptly. Reset the Filter counter and Scroll counter after replacing the filter cartridge (p.64).

LAMP REPLACE 1 and 2

When the LAMP 1 REPLACE indicator and the LAMP 2 REPLACE indicator light orange, replace the projection lamps with new ones promptly. See page 66.

The projector is detecting abnormal condition.

Indicators						Projector Condition
POWER **green**	LAMP **red**	WARNING TEMP. **red**	WARNING FILTER **orange**	SHUTTER **blue**	LAMP 1/2 REP. **orange**	
○	✻	●	○	✻	✻	If the Filter counter reached a time set in the timer setting, a Filter replacement icon (Fig.2) appears on the screen and the WARNING FILTER indicator on the top panel lights up. Replace the filter as soon as possible. If the filter is out of scroll and the projector reaches a time set in the timer setting, Fig. 3 appears on the screen and the WARNING FILTER indicator lights up. Replace the filter cartridge as soon as possible. If the filter is clogged and no scroll is left in the filter cartridge, a Filter cartridge replacement icon (Fig.4) appears on the screen and the WARNING FILTER indicator lights up. Replace the filter cartridge as soon as possible. ✔ ***Note:*** •*Fig.2, Fig.3 and Fig.4 icon will not appear when the Display function is set to "Off" (p.49), or during "Freeze" (p.30).*
○	●	●	⊘	✻	✻	The projector detects an abnormal condition during filter scroll.
✻	○	●	⊘	✻	✻	The projector is being cooled down after detecting an abnormal condition during filter scroll.
○	○	●	⊘	✻	✻	The projector has been cooled down enough and is in the stand-by mode after detecting an abnormal condition during filter scroll.
○	✻	✻	○	✻	✻	The filter cartridge is removed while the projector is on.
⊘	○	⊘	⊘	⊘	⊘	The projector detects an abnormal condition and cannot be turned on. Unplug the AC power cord and plug it again to turn on the projector. If the projector is turned off again, unplug the AC power cord and contact the dealer or the service center. Do not leave the projector on. It may cause an electric shock or a fire hazard.
✻	✻	✻	✻	⊘	✻	The shutter is out of control.
●	○	●	●	⊘	✻	The shutter is out of control. (The projector is in the cooling mode.)
○	○	●	✻	⊘	✻	The shutter is out of control. (The projector is in the stand-by mode.) In that case, contact the service station immediately.

Fig.2 Filter replacement icon

Fig.3

Fig.4 Filter cartridge replacement icon

Compatible Computer Specifications

Basically this projector can accept the signal from all computers with the V- and H-Frequency mentioned below and less than 230 MHz of Dot Clock.

ON-SCREEN DISPLAY	RESOLUTION	H-Freq.(kHz)	V-Freq.(Hz)
VGA 1	640x480	31.470	59.880
VGA 2	720x400	31.470	70.090
VGA 3	640x400	31.470	70.090
VGA 4	640x480	37.860	74.380
VGA 5	640x480	37.860	72.810
VGA 6	640x480	37.500	75.000
VGA 7	640x480	43.269	85.000
MAC LC13	640x480	34.970	66.600
MAC 13	640x480	35.000	66.670
480p	640x480	31.470	59.880
575p	768x575	31.250	50.000
575i	768x576 (Interlace)	15.625	50.000
480i	640x480 (Interlace)	15.734	60.000
SVGA 1	800x600	35.156	56.250
SVGA 2	800x600	37.880	60.320
SVGA 3	800x600	46.875	75.000
SVGA 4	800x600	53.674	85.060
SVGA 5	800x600	48.080	72.190
SVGA 6	800x600	37.900	61.030
SVGA 7	800x600	34.500	55.380
SVGA 8	800x600	38.000	60.510
SVGA 9	800x600	38.600	60.310
SVGA 10	800x600	32.700	51.090
SVGA 11	800x600	38.000	60.510
MAC 16	832x624	49.720	74.550
XGA 1	1024x768	48.360	60.000
XGA 2	1024x768	68.677	84.997
XGA 3	1024x768	60.023	75.030
XGA 4	1024x768	56.476	70.070
XGA 5	1024x768	60.310	74.920
XGA 6	1024x768	48.500	60.020
XGA 7	1024x768	44.000	54.580
XGA 8	1024x768	63.480	79.350
XGA 9	1024x768 (Interlace)	36.000	87.170
XGA 10	1024x768	62.040	77.070
XGA 11	1024x768	61.000	75.700
XGA 12	1024x768 (Interlace)	35.522	86.960
XGA 13	1024x768	46.900	58.200
XGA 14	1024x768	47.000	58.300
XGA 15	1024x768	58.030	72.000
MAC 19	1024x768	60.240	75.080
SXGA 1	1152x864	64.200	70.400
SXGA 2	1280x1024	62.500	58.600
SXGA 3	1280x1024	63.900	60.000
SXGA 4	1280x1024	63.340	59.980
SXGA 5	1280x1024	63.740	60.010
SXGA 6	1280x1024	71.690	67.190
SXGA 7	1280x1024	81.130	76.107

ON-SCREEN DISPLAY	RESOLUTION	H-Freq.(kHz)	V-Freq.(Hz)	
SXGA 8	1280x1024	63.980	60.020	
SXGA 9	1280x1024	79.976	75.025	
SXGA 10	1280x960	60.000	60.000	
SXGA 11	1152x900	61.200	65.200	
SXGA 12	1152x900	71.400	75.600	
SXGA 13	1280x1024 (Interlace)	50.000	86.000	
SXGA 14	1280x1024 (Interlace)	50.000	94.000	
SXGA 15	1280x1024	63.370	60.010	
SXGA 16	1280x1024	76.970	72.000	
SXGA 17	1152x900	61.850	66.000	
SXGA 18	1280x1024 (Interlace)	46.430	86.700	
SXGA 19	1280x1024	63.790	60.180	
SXGA 20	1280x1024	91.146	85.024	
SXGA+ 1	1400x1050	63.970	60.190	
SXGA+ 2	1400x1050	65.350	60.120	
SXGA+ 3	1400x1050	65.120	59.900	
SXGA+ 4	1400x1050	64.030	60.010	
SXGA+ 5	1400x1050	62.500	58.600	
MAC 21	1152x870	68.680	75.060	
MAC	1280x960	75.000	75.080	
MAC	1280x1024	80.000	75.080	
WXGA 1	1366x768	48.360	60.000	
WXGA 2	1360x768	47.700	60.000	
WXGA 3	1376x768	48.360	60.000	
WXGA 4	1360x768	56.160	72.000	
WXGA 6	1280x768	47.776	59.870	
WXGA 7	1280x768	60.289	74.893	
WXGA 8	1280x768	68.633	84.837	
WXGA 9	1280x800	49.600	60.050	
WXGA 10	1280x800	41.200	50.000	
WXGA 11	1280x800	49.702	59.810	
WUXGA 1	1920x1200	74.556	59.885	✻
WUXGA 2	1920x1200	74.038	59.950	
WSXGA+ 1	1680x1050	65.290	59.954	
WXGA+ 1	1440x900	55.935	59.887	
WXGA+ 2	1440x900	74.918	60.000	✻
UXGA 1	1600x1200	75.000	60.000	✻
UXGA 2	1600x1200	81.250	65.000	✻
UXGA 3	1600x1200	87.500	70.000	✻
UXGA 4	1600x1200	93.750	75.000	✻
UXGA 5	1600x1200	106.250	85.000	✻
720p	1280x720	45.000	60.000	
720p	1280x720	37.500	50.000	
1035i	1920x1035 (Interlace)	33.750	60.000	
1080i	1920x1080 (Interlace)	33.750	60.000	
	1920x1080 (Interlace)	28.125	50.000	

✻ "True" cannot be selected when WUXGA1, WXGA+2, UXGA1, UXGA2, UXGA3, UXGA4 and UXGA5 are selected. (p.40)

ON-SCREEN DISPLAY	RESOLUTION	H-Freq.(kHz)	V-Freq.(Hz)
1080p	1920x1080	33.750	30.000
	1920x1080	28.125	25.000
	1920x1080	27.000	24.000
	1920x1080	67.500	60.000
	1920x1080	56.250	50.000
1080psf/30	1920x1080	33.750	60.000
1080psf/25	1920x1080	28.125	50.000
1080psf/24	1920x1080	27.000	48.000

When an input signal is digital from the DVI terminal, refer to the chart below.

ON-SCREEN DISPLAY	RESOLUTION	H-Freq.(kHz)	V-Freq.(Hz)
D-VGA	640x480	31.470	59.940
D-480p	720x480	31.470	59.880
D-575p	720x575	31.250	50.000
D-SVGA	800x600	37.879	60.320
D-XGA	1024x768	43.363	60.000
D-WXGA 1	1366x768	48.360	60.000
D-WXGA 2	1360x768	47.700	60.000
D-WXGA 3	1376x768	48.360	60.000
D-WXGA 4	1360x768	56.160	72.000
D-WXGA 5	1366x768	46.500	50.000
D-WXGA 6	1280x768	47.776	59.870
D-WXGA 7	1280x768	60.289	74.893
D-WXGA 8	1280x768	68.633	84.837
D-WXGA 9	1280x800	49.600	60.050
D-WXGA 10	1280x800	41.200	50.000
D-WXGA 11	1280x800	49.702	59.810
D-SXGA 1	1280x1024	63.980	60.020
D-SXGA 2	1280x1024	60.276	58.069
D-SXGA+ 1	1400x1050	63.970	60.190
D-SXGA+ 2	1400x1050	65.350	60.120
D-SXGA+ 3	1400x1050	65.120	59.900

ON-SCREEN DISPLAY	RESOLUTION	H-Freq.(kHz)	V-Freq.(Hz)
D-WUXGA 2	1920x1200	74.038	59.950
D-WSXGA+ 1	1680x1050	65.290	59.954
D-WXGA+ 1	1440x900	55.935	59.887
D-720p	1280x720	45.000	60.000
D-720p	1280x720	37.500	50.000
D-1035i	1920x1035 (Interlace)	33.750	60.000
D-1080i	1920x1080 (Interlace)	33.750	60.000
	1920x1080 (Interlace)	28.125	50.000
D-1080psf/30	1920x1080	33.750	60.000
D-1080psf/25	1920x1080	28.125	50.000
D-1080psf/24	1920x1080	27.000	48.000
D-1080p	1920x1080	33.750	30.000
	1920x1080	28.125	25.000
	1920x1080	27.000	24.000
	1920x1080	67.500	60.000
	1920x1080	56.250	50.000

✔ ***Note:***

- *Depending on the condition of signals and the type and length of cables, these signals may not be properly viewed.*
- *Specifications are subject to change without notice.*

When the input signal is digital from the HDMI terminal, refer to the chart below.

System mode	RESOLUTION	H-Freq. (kHz)	V-Freq. (Hz)
D-VGA	640x480	–	59.94/60
D-WXGA6	1280x768	47.776	59.870
D-WXGA7	1280x768	60.289	74.893
D-WXGA8	1280x768	68.633	84.837
D-WXGA9	1280x800	49.572	59.870
D-WXGA10	1280x800	41.200	50.000
D-480i	720x480	–	59.94/60
D-575i	720x575	–	50.00
D-480p	720x480	–	59.94/60

System mode	RESOLUTION	H-Freq. (kHz)	V-Freq. (Hz)
D-575p	720x575	–	50.00
D-720p	1280x720	–	59.94/60
D-720p	1280x720	–	50.00
D-1080i	1920x1080	–	59.94/60
D-1080i	1920x1080	–	50.00
D-1080p	1920x1080	–	59.94/60
D-1080p	1920x1080	–	50.00
D-1080p	1920x1080	–	24.00

✔ ***Note:***

- *You might be able to project images even when signals other than above are inputted, however the functions of the projector could be limited.*

List of Picture in Picture

		On-Board						Optional Interface Board												
		Input1			Input2			Dsub	Dsub -DVI			Component -S-video			Component		HDCP -DVI			SDI
		Analog PC	Scart	Digital	Analog PC	Component	Video/ S-Video	Analog PC	Analog PC	Scart	Digital	Analog PC	Component	Video/ S-video	Analog PC	Component	Analog PC	Scart	Digital	Digital
On-Board Input1	Analog PC			O	O	O	O	O	O	O	O	O	O	O	O	O	O	O	O	O
	Scart			O	O	O	-	-	-	-	O	-	-	-	-	-	-	-	O	O
	Digital	O	O		O	O	O	O	O	-	-	O	O	O	O	O	O	-	-	-
On-Board Input2	Analog PC	O	O	O				O	O	O	O	O	O	O	O	O	O	O	O	O
	Component	O	O	O				O	O	O	O	O	O	O	O	O	O	O	O	O
	Video/ S-Video	O	-	O				-	-	-	O	-	-	-	-	-	-	-	O	O

o : Picture in Picture combinations are enabled
- : Picture in Picture combinations are disabled

✔ ***Note:***

- *You cannot select Input 3 and Input 4 simultaneously as images of Main picture and Sub picture.*
- *When the input signal(s) is/are incompatible, X mark will be displayed on the Main/Sub picture.*
- *Depending on the frequency or signal type of PC/AV input, the display resolution may be lowered or images may not be displayed on the Main/Sub picture.*

  <Display resolution is lowered when;>
  - *Inputting PC analog signals: Between 100-160 MHz*
  - *Inputting AV analog signals: 1080p*

  <Images are not displayed and X mark appears when;>
  - *Inputting PC analog signals: More than 160MHz*
  - *Inputting PC digital signals: More than 100MHz*
  - *Inputting AV digital signals: 1080p*

Technical Specifications

Mechanical Information

Projector Type	Multi-media Projector
Dimensions (W x H x D)	15.75″ x 9.55″ x 20.57″ (400.0 mm x 242.5 mm x 522.5 mm)
Net Weight	43.34lbs (19.7 kg)
Feet Adjustment	0˚ to 5˚

DLP Chip

Projection System	0.95″ Single DLP chip, High brightness color wheel x 2
Number of Pixels	1,470,000 pixels (1,400 x 1,050 dots)

Signal Compatibility

Color System	PAL, SECAM, NTSC, NTSC4.43, PAL-M, and PAL-N
High Definition TV Signal	480i, 480p, 575i, 575p, 720p, 1035i, 1080p, and 1080i
Scanning Frequency	H-sync. 15 kHz–120 kHz, V-sync. 48 Hz–120 Hz

Optical Information

Projection Lamp	330 W UHP lamp x 2

Interface

Input 1	DVI-D Terminal (Digital), Mini D-Sub 15-pin Terminal (Analog), HDMI
Input 2	BNC Type x 5 (VIDEO/Y/G, B/Pb/Cb, R/Pr/Cr, H/HV and V), S-Video
Input 3	Vacant
Input 4	Network Board
Monitor Output	Mini D-sub 15 pin
Other Jacks	Serial port in (D-sub 9), Serial port out (D-sub 9), USB port, and Wired Remote Jack

Power

Voltage and Power Consumption	AC 100–120 V (9.2A Max. Ampere), 50/60 Hz (The U.S.A and Canada)
	AC 200-240 V (4.4A Max. Ampere), 50/60 Hz (Continental Europe)

Operating Environment

Operating Temperature	41˚F–104˚F (5˚C–40˚C)
Storage Temperature	14˚F–140˚F (-10˚C–60˚C)

Remote Control

Battery	AA or LR6 Type x 2
Operating Range	16.4′ (5 m/±30˚)
Dimensions	1.79″ (W) x 1.03″ (H) x 6.24″ (D) (45.5 mm x 26.2 mm x 158.5 mm)
Net Weight	4.1 oz (117 g) (including batteries)

Accessories

Owner's Manual (CD-ROM)
Quick Reference Guide
AC Power Cord
Remote Control and Batteries
VGA Cable
PIN Code Label
Cable covers (support cover & cover)
Fixing bracket for power cord x 2
Rich color reproduction color wheel x 2
Ferrite core (for LAN cable)
Strap x 2
Cable tie x 3
Real Color Manager Pro (CD-ROM)
Filter cartridge

- The specifications are subject to change without notice.
- Each projector has its own characteristics.
  When projecting with several projectors on the same screen or side by side, you may recognize different white balance and color uniformity on each projector.

Optional Parts

The parts listed below are optionally available. When ordering those parts, specify the item name and Model No. to the sales dealer.

	Model No.
Optional Interface Board (DVI)	: *103-104101-01*
Optional Interface Board (5-BNC)	: *38-804716-04*
Optional Interface Board (D-sub 15)	: *38-804718-02*
Optional Interface Board (Dual-SDI)	: *38-804790-01*

For a full list of Optional Interface Boards, please visit: www.ChristieDigital.com

✔ ***Note:***

- *Between the two features of the provided Real Color Manager Pro (CD-ROM); "Color Correction" and "Gamma Correction", "Color Correction" is not available with this projector.*

Configurations of Terminals

ANALOG (Mini D-sub 15 pin)

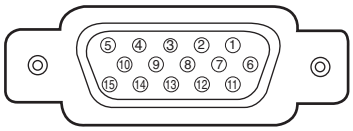

Input

1	Red Input	**9**	+5V Power
2	Green Input	**10**	Ground (Vert. sync.)
3	Blue Input	**11**	Ground
4	No Connect	**12**	DDC Data
5	Ground (Horiz.sync.)	**13**	Horiz. sync.
6	Ground (Red)	**14**	Vert. sync.
7	Ground (Green)	**15**	DDC Clock
8	Ground (Blue)		

Output

1	Red Output	**9**	No Connect
2	Green Output	**10**	Ground (Vert.sync.)
3	Blue Output	**11**	No Connect
4	No Connect	**12**	No Connect
5	Ground (Horiz.sync.)	**13**	Horiz. sync. Output
6	Ground (Red)	**14**	Vert. sync. Output
7	Ground (Green)	**15**	No Connect
8	Ground (Blue)		

DIGITAL DVI-D (DVI 24 PIN)

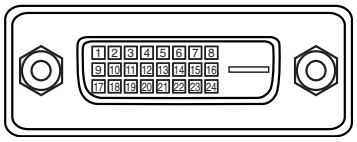

1	T.M.D.S. Data2–	**9**	T.M.D.S. Data1–	**17**	T.M.D.S. Data0–
2	T.M.D.S. Data2+	**10**	T.M.D.S. Data1+	**18**	T.M.D.S. Data0+
3	T.M.D.S. Data2 Shield	**11**	T.M.D.S. Data1 Shield	**19**	T.M.D.S. Data0 Shield
4	No Connect	**12**	No Connect	**20**	No Connect
5	No Connect	**13**	No Connect	**21**	No Connect
6	DDC Clock	**14**	+5V Power	**22**	T.M.D.S. Clock Shield
7	DDC Data	**15**	Ground (for +5V)	**23**	T.M.D.S. Clock+
8	No Connect	**16**	Hot Plug Detect	**24**	T.M.D.S. Clock–

USB CONNECTOR (Series B)

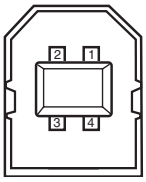

1	Vcc
2	- Data
3	+ Data
4	Ground

HDMI

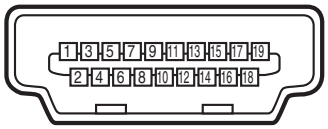

19 Pin Type A

1	TMDS Data 2+ Input	11	Ground (TMDS Clock)
2	Ground (TMDS Data 2)	12	TMDS Clock- Input
3	TMDS Data 2- Input	13	-----
4	TMDS Data 1+ Input	14	-----
5	Ground (TMDS Data 1)	15	SCL
6	TMDS Data 1- Input	16	SDA
7	TMDS Data 0+ Input	17	Ground (DDC/CEC)
8	Ground (TMDS Data 0)	18	+5V Power
9	TMDS Data 0- Input	19	Plug insert detection
10	TMDS Clock+ Input		

CONTROL PORT CONNECTOR (D-sub 9 pin)

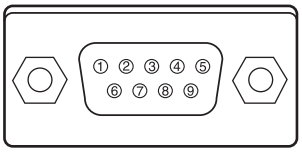

	Serial
1	-----
2	R X D
3	T X D
4	-----
5	SG
6	-----
7	RTS
8	CTS
9	-----

PIN Code Number Memo

Write down the PIN code number in the column below and keep it with this manual securely. If you forgot or lost the number and unable to operate the projector, contact the service station.

PIN Code Lock No.

Factory default set No: 1 2 3 4*

Logo PIN Code Lock No.

Factory default set No: 4 3 2 1*

*Should the four-digit number be changed, the factory set number will be invalid.

While the projector is locked with the PIN code...

Put the label below (supplied) on in a prominent place of the projector's body while it is locked with a PIN code.

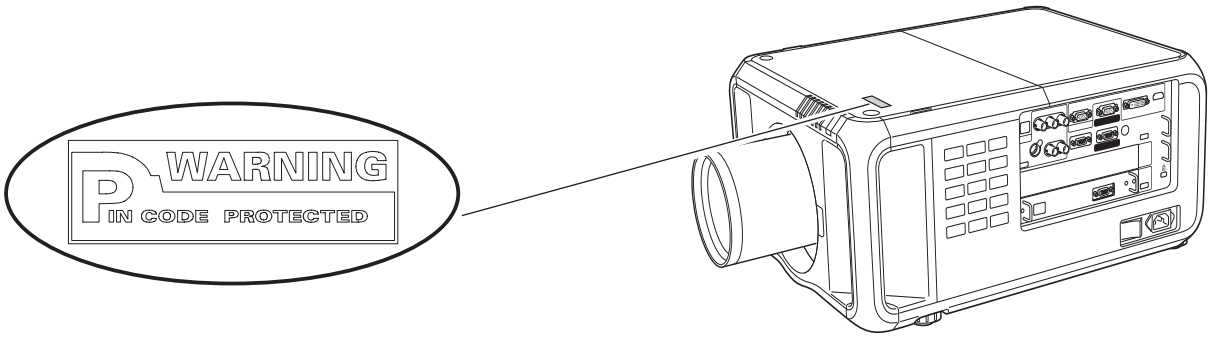

Dimensions

Unit: inch (mm)

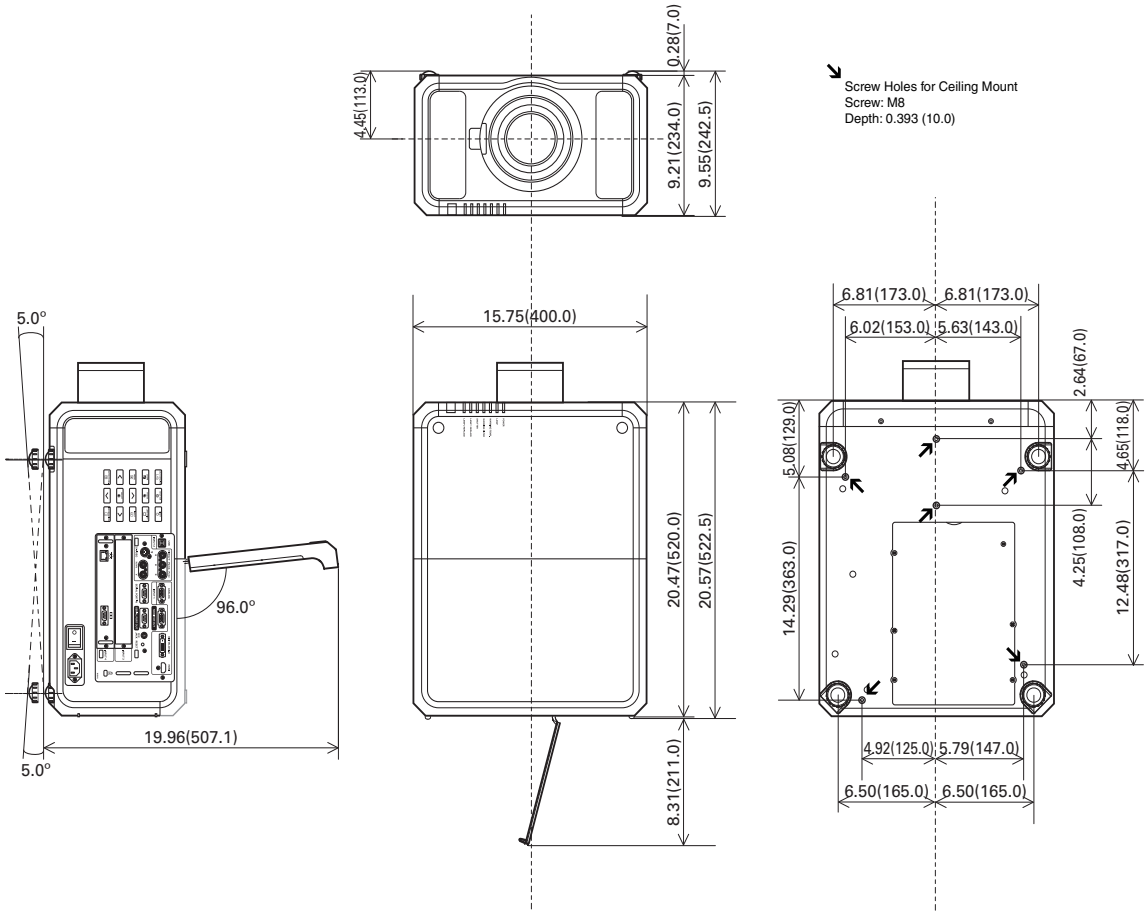

How to adjust multiple screens

With the Edge blending and Color matching functions, you can seamlessly display the images from more than two projectors. Follow the steps below to adjust multiple projector images.

Edge blending

1 Confirm if you use the same type of color wheel (high brightness or rich color reproduction color wheel) for each projector, and set the same screen size and image level.

2 Display the images to be edge blended on a screen.
(The following example shows the case when you use two projectors (Projector A and B).)

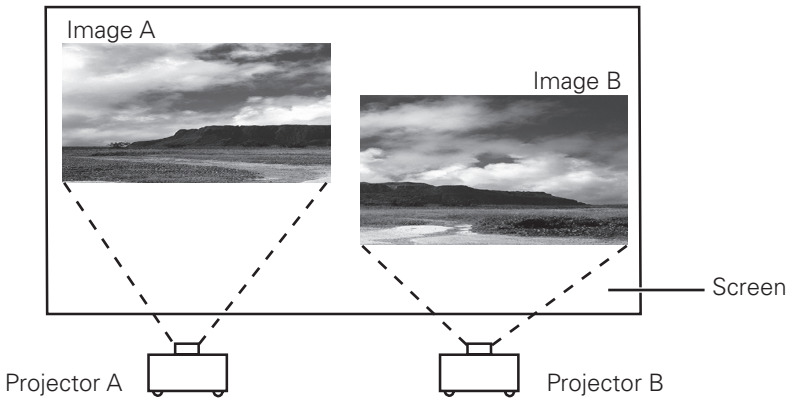

3 Select 'Edge blending' in the setting menu and display the Edge blending dialog box on each image of Image A and B. Then, set 'Edge blending' to 'On' and enter the width of overlap area. (Refer to page 52 for operation procedure.)

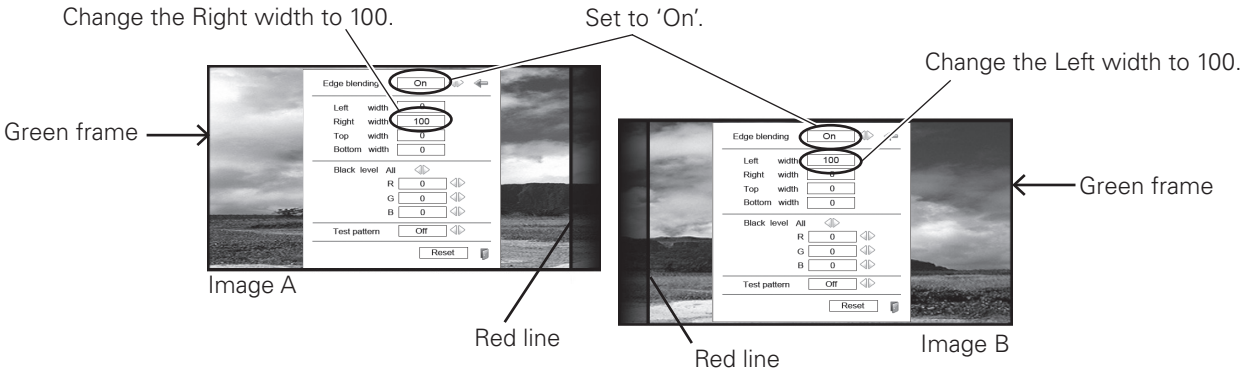

- The blending widths of each projector (e.g., the right width of Image A and the left width of Image B) must be set to the same value.
- The values in the figure are example only.
- Each image frame is displayed in green, and each set width is displayed in red.
- The areas to be overlapped are shaded.

4 Adjust the position, focus and zoom of each image if necessary, and then overlap the shaded areas by using the lens shift function. When the shaded areas are overlapped with each other correctly, the red lines turn yellow.

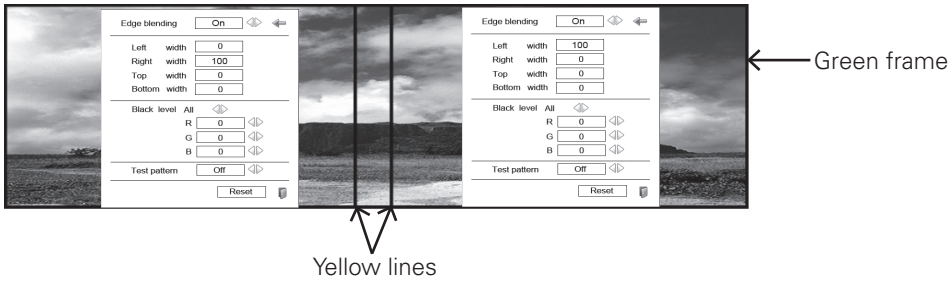

5 Set 'Test pattern' to 'On' to display a 50 % white image. The overlap area will be brighter than the non-overlapping area. Adjust the Black level in the Edge blending dialog box to increase the brightness of the non-overlapping area so that the unevenness is reduced.

✔ ***Note:***
- *The overlapping area might become uneven depending on the images. In such a case, it is recommended to decrease the contrast of the images in the Image Adjust Menu or set the BrilliantColor function to 'Off'.*

If the colors of the left and right images do not match, then follow the next step.

Color matching

6 Select 'Color matching' in the setting menu and display the Color matching dialog box.
Then, set 'Color matching' to 'On' and adjust the color settings (Red/Green/Blue/White).
(Refer to page 53 for operation procedure.)

7 Select 'Advanced color matching' if you need further adjustment.
In the Advanced color matching dialog box, set 'Advanced color matching' to 'On' and adjust the values of Target (Red/ Green/ Blue/ Cyan/ Magenta/ Yellow/ White).

✔ ***Note:***
- *When you change the values of Target, make sure that each Target value should be within the range of Measured value. (e.g., In the case of the Fig.1, the X value of Target-Red should be within 0.623 which is the X value of Measured-Red.)*

8 If the colors of the left and right images do not match, even if the Target values are adjusted, use a colorimeter which is capable of measuring the chromaticity coordinates and luminance. Follow the steps below.

1. Set 'Auto test pattern' to 'On' in the Advanced color matching dialog box.
2. Put the cursor in the Mesured-White and press the SELECT button to display a white pattern.
3. Measure the chromaticity coordinates (x,y) and luminance (lx) by using the colorimeter.
4. Enter the obtained (x,y) values in the Mesured-White. (The (L) value of Mesured-White should be left at 1.000.)
5. Put the cursor in the Mesured-Red and press the SELECT button to display a red pattern.
6. Measure the chromaticity coordinates (x,y) and luminance (Lx) by using the colorimeter.
7. Enter the obtained (x,y) values in the Mesured-Red. Then, calculate the (L) value of Mesured-Red by applying the following formula and enter the value.
   (L) value of Mesured-Red = [Lx of Red] ÷ [Lx of White]
8. Enter the values of Mesured-Green, Mesured-Blue, and Mesured-Half white in the same way as Mesured-Red.
9. Adjust the values of Target again.
10. Select 'Store' to complete. (Apply the same adjustment to the other projector if necessary.)

Set to 'On'.

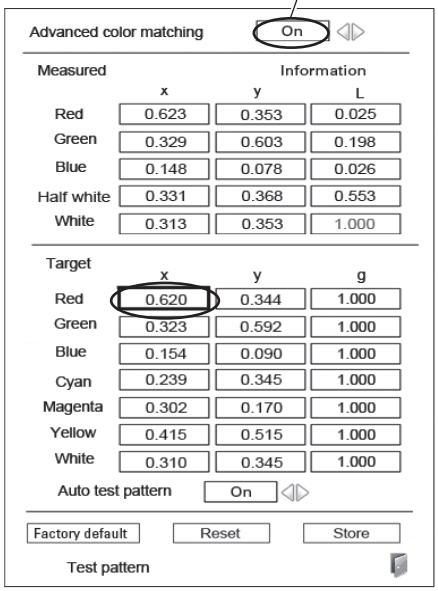

Fig.1 For rich color reproduction color wheel

Americas

USA
Christie Digital Systems USA, Inc.
10550 Camden Drive
Cypress CA 90630
PH: 714-236-8610
FX: 714-503-3375
Customer Service: 1-866-880-4462
sales-us@christiedigital.com

Canada
Christie Digital Systems Canada, Inc.
809 Wellington St. N.
Kitchener, Ontario N2G 4Y7
PH: 519-744-8005
FX: 519-749-3321
Customer Service: 1-800-265-2171
sales-canada@christiedigital.com

Chile
Representative Office
Christie Digital Systems USA, Inc.
Av. Pedro Fontova 7619 of 60
Santiago
PH: 56-2-721 11 75
Mobile: 5699 436 6555

Europe, Middle East & Africa

United Kingdom
Branch Office
Christie Digital Systems Canada, Inc.
ViewPoint
200 Ashville Way
Wokingham
Berkshire, U.K.
RG41 2PL
PH: +44 (0) 118 977 8000
FX: +44 (0) 118 977 8100
sales-europe@christiedigital.com

France
Representative Office
Christie Digital Systems Canada, Inc.
Bâtiment D-Hall 4
Parc Louis Roche
96/114 Avenue Louis Roche
F-92230 Gennevilliers
France
PH: +33 (0)1 41 21 44 04
FX: +33 (0)1 41 21 00 36
sales-france@christiedigital.com

Germany
Representative Office
Christie Digital Systems Canada, Inc.
Willicher Damm 129
D-41066
Mönchengladbach
PH: +49 2161 664540
FX: +49 2161 664546
sales-germany@christiedigital.com

Eastern Europe
Representative Office
Christie Digital Systems Canada, Inc.
Regus Bank Centre
Szabadsag ter 7.
H-1054 Budapest
Hungary
PH: +36 (0)1 47 48 100
FX: +36 (0)1 47 48 452
sales-europe@christiedigital.com

Middle East
Representative Office
Christie Digital Systems Canada, Inc.
C/O Emirates Group Security Building,
C Block, Room 207, 208, 209
Airport Free Zone
PO Box 293762
Dubai, UAE
PH: +971 (0) 4 299 7575
FX: +971 (0) 4 299 8077

Spain
Christie Authorized Reseller
Antonio Abad
Polígono Industrial Ventorro Del Cano
Esquina C/ Aldea del Fresno, 3
3ª Puerta. Izqda
28925 Alcorcón, Madrid
PH: + 34 91 633 9990
FX: + 34 91 633 9991

Italy
Christie Authorized Reseller
Angelo Tacca
Via Garibaldi, 88
20024 Garbagnate Milanese (MI)
PH: +39 02 9902 1161
FX: +39 02 9902 2641

Africa
Representative Office
Christie Digital Systems Canada, Inc.
4 Patricia Road
Gillitts
KwaZulu Natal
3610
Republic of South Africa
PH: +27 (0) 317 671 347
FX: +27 (0) 317 671 347
MB: +27 (0) 823 045 442

Asia Pacific

Singapore
Branch Office
Christie Digital Systems USA, Inc.
627A Aljunied Road
05-02 Biz Tech Centre
Singapore, 389842
PH: +65 6877-8737
FX: +65 6877-8747
sales-singapore@christiedigital.com

China - Beijing
Representative Office
Christie Digital Systems USA, Inc.
7B15, Hanwei Plaza
Guanghua Road
Chaoyang District,
Beijing, 100004
PH: +86 10 6561 0240
FX: +86 10 6561 0546
sales-china@christiedigital.com

China - Shanghai
Representative Office
Christie Digital Systems USA, Inc.
Room 1109–1116 Shartex Plaza
No. 88 Zun Yi South Road
Shanghai 200336
PH: +86 21 6278 7708
FX: +86 21 6278 5816
sales-china@christiedigital.com

Japan
Representative Office
Christie Digital Systems USA, Inc.
A-bldg., 2nd Floor
Ariake Frontier Building
3-1-25, Ariake, Koto-ku
Tokyo, 135-0063
PH: 81-3-3599-7481
FX: 81-3-3599-7482
sales-japan@christiedigital.com

South Korea
Representative Office
Christie Digital Systems USA, Inc.
6F, ILSIN Building, 15-15
Yeouido-dong,
Yeongdeungpo-gu, Seoul,
150-872 South Korea
PH:+82 2 702 1601
FX: +82 2 702 1602

India
Representative Office
Christie Digital Systems USA, Inc.
Unit No. 03, Navigator Building
International Technology Park
Whitefield Road
Bangalore 560 066
India
PH: (080) 41468941 – 48
FX: (080) 41468949

www.christiedigital.com

KJ5KL