USA's primary source for projector lamps
myprojectorlamps

PROJECTOR OWNER'S MANUAL

Christie

CP2000-SB

Need a replacement lamp for this projector?

www.myprojectorlamps.com

Original manufacturer manual, provided unmodified as a courtesy of MyProjectorLamps.com.
All trademarks belong to their respective owners.

CP2000-SB

USER MANUAL

020-100162-05

CHRISTIE®

1 Introduction

1.1 The Projector 1-2
1.1.1 New Features 1-2
1.1.2 List of All Features 1-2
1.1.3 How the Projector Works 1-3
1.2 List of Components 1-3
1.2.1 Power and Lamp Requirements 1-3
1.2.2 Software Requirements 1-3
1.3 Purchase Record and Service Contacts 1-4
1.4 Who Should Use This Manual 1-5
1.4.1 Typographical Notations 1-5

2 Installation & Setup

2.1 Assembly and Connection of Components 2-2
2.1.1 Projection Head and Pedestal 2-3
2.1.2 Exhaust Ducting 2-11
2.1.3 Lens(es) 2-12
Primary Zoom Lens 2-12
Anamorphic Lens or 1.26x Wide Converter Installation (Optional) 2-12
2.1.4 Install First Lamp 2-12
2.1.5 Connecting to Power 2-13
2.2 Installing and Connecting Sources 2-16
2.2.1 Support for Internal Servers/Source 2-18
2.2.2 Security for Internal Servers/Source 2-18
2.3 Connecting for Communications 2-18
TPC 2-19
PC/Laptop, Server or Network 2-19
2.4 Adjusting Tilt and Leveling 2-19
2.5 Initial Power Up 2-21
2.6 Maximizing Light Output 2-22
2.6.1 Calibrating Screen Brightness (fL) 2-22
2.7 Basic Image Alignment 2-23
2.7.1 Basic Optical Alignment Procedure 2-23
2.8 Offset and Boresight Alignment 2-24
2.8.1 Adjust Offset 2-24
2.8.2 Adjust Left/Right Boresight 2-25
2.8.3 Adjust Top/Bottom Boresight 2-27
2.8.4 Copy the Channel Settings To Another Channel 2-27
2.8.5 Add Auxiliary Lens 2-28
Anamorphic (1.25x) 2-28
Wide Converter Lens (1.26x) 2-28
2.9 Fold Mirror and Convergence Adjustments 2-29
Fold Mirror Adjustment 2-29
DMD Convergence 2-29

2.9.1 Calibrating the System Using DCP Librarian Setup Software 2-30
Color Calibration 2-30
Electronic Screen Masking 2-30
PCFs (Rare) 2-30

3 Operation

3.1 Projector Basics 3-2
3.1.1 Components and Features 3-2
Air Filter 3-3
Breaker Panel 3-3
Casters 3-3
Communications and Source Connection Panel 3-3
Coolant Level Gauge 3-4
Exhaust Duct 3-4
Extender Legs 3-4
Lamps 3-4
Lens Mount & Auxiliary Lens Mount 3-4
Leveling Feet 3-4
Pedestal 3-4
Power Cabling 3-5
Projection Head 3-5
Security Locks 3-5
Security Plates 3-5
Source/Control Cabling 3-6
Touch Panel Controller (TPC) 3-6
3.2 Power-up Procedure 3-6
3.3 Power-down Procedure 3-7
3.4 Introduction to the Touch Panel Controller 3-8
3.4.1 User Access and Rights 3-8
3.4.2 TPC Power-up Defaults 3-9
3.4.3 Failed TPC Connection 3-9
3.5 Using the Touch Panel Controller (TPC) 3-10
3.5.1 TPC Main Menu 3-11
3.5.2 TPC Status Menu 3-12
3.5.3 TPC Alarm Window 3-16
Can Alarm Conditions Be Ignored? 3-16
Responding to an Alarm Window 3-17
3.5.4 TPC Custom Menu 3-18
Custom: Page-1 Menu 3-19
Custom: Page-2 Menu 3-21
Custom: 3D Control Menu 3-22
Custom: Lamp Menu 3-25
Custom: Lens Menu 3-26
Channel: Lens Menu Disabled 3-27

3.5.5 TPC Advanced Menu 3-27
Advanced: Preference Menu 3-28
Advanced: Lamp Menu 3-29
Adding a New Lamp 3-30
Advanced: Lamp History Menu 3-30
Advanced: Lens Menu 3-31
Advanced: Test Pattern Menu 3-32
Advanced: User Menu 3-33
3.5.6 TPC Admin Menu 3-35
Admin: Source Menu 3-35
Admin: Screen Menu 3-38
Admin: Gamut Menu 3-40
Admin: IP Config Menu 3-44
Admin: General and Admin: Lamp Menus 3-47
Admin: GPIO Menu 3-48
3.5.7 TPC About Menu 3-49
3.5.8 Understanding Versions in Your Projector 3-49
3.5.9 Selecting a Display (Starting a Presentation) 3-50
Cinema Vs. Non-Cinema Sources 3-51
Other Methods of Source Selection 3-51
3.5.10 Errors and Alarms 3-51
3.6 Remote Control of the Touch Panel Controller 3-52
3.6.1 Understanding ASCII Message Formats 3-52
3.6.2 Message Components and Structure 3-52
3.6.3 Sample Messages and Their Meaning 3-53
3.6.4 What is Actually Sent in a Message? 3-54
3.6.5 Available ASCII Codes 3-54
3.6.6 Setup and Shutdown 3-54
3.7 Upgrading SSM Firmware 3-55
3.7.1 Requirements 3-55
3.7.2 Update Procedure 3-55
3.7.3 Troubleshooting 3-56
3.8 Working with the Lamp 3-57
3.8.1 Turning the Lamp ON/OFF 3-57
3.8.2 If the Lamp Won't Turn ON 3-57
3.8.3 Adjusting Lamp Power (LiteLOC™ or Manually) 3-58
Using LiteLOC™ 3-58
Using Lamp Power 3-59
3.8.4 Adjusting Lamp Position for LampLOC™ 3-61
Use the Do Auto Button for LampLOC™ 3-61
When to Use the Individual LampLOC™ Buttons 3-61
3.8.5 Stand-by Mode 3-62
3.8.6 How Old is My Lamp? 3-62
3.8.7 When to Replace the Lamp 3-63
3.8.8 Maintaining Footlamberts 3-63

3.9 Working with the Lens 3-64
3.9.1 Lens Mount Functions 3-64
Zoom 3-64
Offsets 3-65
Focus 3-65
3.9.2 Auxiliary Lens 3-65
3.10 Working with 3D 3-66
3.10.1 3D Description 3-66
3.10.2 What Do I Need for 3D? 3-66
3.10.3 Supported Hardware Setup 3-67
3.10.4 Other Hardware Setups 3-68
3.10.5 3D Instructions 3-69
Hardware Instructions 3-69
Web User Interface Instructions 3-69
3.10.6 3D Troubleshooting 3-70
Using the 3D Test Pattern 3-70
Image Breakup 3-70
No 3D Effect 3-70
Ghosting/Cross-Talk 3-70
Motion Artifacts 3-70
Single 3D Input Does Not Work 3-70
3.11 Working with Servers and Diagnostics 3-71
3.11.1 TPC Status: Server Menu 3-71
3.11.2 TPC Status: Diag Menu 3-72
3.11.3 TPC Status: Interrogator Menu 3-72

4 Cinema Operation

4.1 Compatible Cinema Sources 4-2
4.2 Image Formats 4-4
4.2.1 Projector Variables: Electronic and Auxiliary Resizing 4-4
4.2.2 Theatre Variables: Masking 4-5
4.3 Selecting the Cinema Source 4-7
4.3.1 Touch Panel Controller Method 4-7
4.3.2 Other Methods 4-8
4.4 Adjusting the Cinema Display 4-8

5 Non-Cinema Operation

5.1 Compatible Non-Cinema Sources 5-2
5.1.1 Dual- and Twin-Link DVI 5-3
5.2 Selecting the Source 5-4

6 Maintenance

6.1 Warnings and Guidelines 6-2
6.1.1 Labels and Markings 6-2
6.1.2 General Precautions 6-2

6.1.3 AC/Power Precautions 6-3
6.1.4 Lamp Precautions 6-3
6.2 Maintaining Proper Cooling 6-4
6.2.1 Ventilation 6-4
6.2.2 Air Filter 6-4
6.2.3 Liquid Cooler 6-4
6.2.4 Exhaust Duct & Lamp Fan Interlocks 6-5
6.3 Maintenance and Cleaning 6-5
6.3.1 Electrical 6-5
6.3.2 Optical 6-5
When to Check 6-5
Supplies 6-6
Cleaning the Lens 6-6
Cleaning the Reflector 6-6
6.3.3 Other Components 6-7
Lamp Fan 6-7
Igniter 6-7
Air Flow Interlocks 6-7
Laminar Airflow Device (LAD) 6-7
6.4 Replacing the Lamp & Filter 6-7
6.4.1 Lamp Replacement Procedure 6-8
6.4.2 Filter Replacement Procedure 6-11
6.5 Replacing a Lens 6-12

7 Troubleshooting

7.1 Power 7-2
7.1.1 Projector Will Not Start 7-2
7.2 Lamp 7-2
7.2.1 Lamp Does Not Ignite 7-2
7.2.2 Lamp Suddenly Goes Off 7-2
7.2.3 No Lamp Current Reading 7-2
7.2.4 Flicker, Shadows or Dimness 7-3
7.2.5 LampLOC™ Does Not Seem to Work 7-3
7.2.6 LiteLOC™ Does Not Seem to Work 7-3
7.3 TPC 7-3
7.4 Ethernet 7-4
7.5 Cinema Displays 7-4
7.5.1 Blank Screen, No Display of Cinema Image 7-4
7.5.2 Severe Motion Artifacts 7-4
7.5.3 Image Appears Squeezed or Vertically Stretched into Center of Screen 7-4
7.5.4 No Image, Just Pink Snow 7-4
7.6 Non-Cinema Displays 7-5
7.6.1 The Projector is ON but There's No Display 7-5
7.6.2 The Display is Jittery or Unstable 7-5
7.6.3 The Display is Faint 7-5
7.6.4 The Upper Portion of the Display is Waving, Tearing or Jittering 7-5

7.6.5 Portions of the Display are Cut Off or Wrap to the Opposite Edge 7-5
7.6.6 The Display Appears Compressed (Vertically Stretched) 7-5
7.6.7 Data is Cropped from Edges 7-6
7.6.8 Display Quality Appears to Drift from Good to Bad, Bad to Good 7-6
7.6.9 The Display has Suddenly Frozen 7-6
7.6.10 Colors in the Display are Inaccurate 7-6
7.6.11 The Display is Not Rectangular 7-6
7.6.12 The Display is “Noisy” 7-6
7.6.13 There are Random Streaks on the Bottom of the Image 7-6

8 Specifications

8.1 Display 8-2
8.2 Lenses 8-2
8.3 Inputs 8-3
8.3.1 Cinema Inputs 8-3
8.3.2 Non-Cinema DVI Inputs (for Alternative Content) 8-3
8.3.3 Control Ports 8-3
8.4 Touch Panel Controller 8-4
8.5 Power Specifications 8-4
8.6 Lamps 8-5
8.7 Regulatory 8-6
8.8 Environment 8-7
8.8.1 Operating Environment 8-7
8.8.2 Non-Operating Environment 8-7
8.9 Weight & Size 8-7
8.10 Standard Components 8-9

Appendix A: Glossary

Appendix B: ASCII Messages

B.1 Function Codes B-2
B.2 Messages with Multiple Parameters B-15
B.2.1 Error Messages (ERR) B-15
Additional Parameters for "001" System Errors and "002" System Warnings B-15
Examples of Critical System Error (001) Messages B-17
Examples of System Warning (002) Error Messages B-17
B.2.2 For Your Information (FYI) B-18
B.2.3 History (HIS) B-18
B.2.4 Intelligent Lens System (ILS) B-18
Examples of ILS Commands B-19
B.2.5 System Status (SST) B-19
B.2.6 3D Controls (TDC) B-22

Appendix C: Serial Communication

C.1 Serial Links to Projector C-2
C.1.1 Standard RS-232 Devices C-2
C.1.2 Cine-IPM 2K C-2

Appendix D: GPIO System Integration

D.1 The GPIO Port D-2
D.1.1 Example: GPIO and 3D Device D-2

Appendix E: Repacking the Projector

1 Introduction

This section includes information on the following:

- *1.1 The Projector*
- *1.2 List of Components*
- *1.3 Purchase Record and Service Contacts*
- *1.4 Who Should Use This Manual*

1.1 The Projector

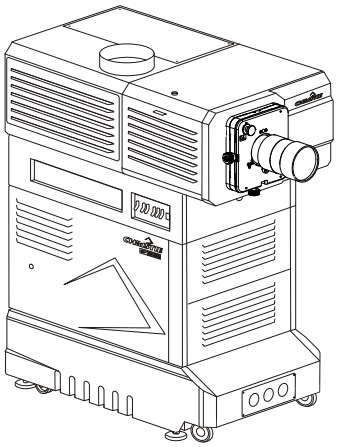

The *CP2000-SB* is a professional quality, easy-to-use DMD™ projector utilizing *Digital Light Processing (DLP™) Cinema™* technology from Texas Instruments, which integrates smoothly into traditional projection environments such as theatres and other wide screen exhibitor venues.These projectors provide stunning wide-screen high-resolution cinema images that remain flawless from first release to final show—truly the solution for critical digital cinema applications. *CP2000-SB* interfaces with local networks typical in theatres throughout the world, and can be expanded even further by connecting non-cinema DVI source material for multimedia presentations from a variety of formats. The Christie HDCP Interface Board enables *CP2000-SB* projectors to accept and display HDCP protected content. The *CP2000-SB* accepts an HDCP signal from a wide variety of sources; such as Blu-Ray™ players, HD receivers and HD DVD players, if such sources are fed directory into the projector.

1.1.1 New Features

- Motorized Lens Mount automates the process of setting the Focus, Horizontal (X) and Vertical (Y) Offset, and Zoom. **NOTE**: *TPC version 2.9 higher is required.*

1.1.2 List of All Features

- *DLP Cinema™* 3-chip electronics with 2048 x 1080 native resolution
- Versatile electronic and optical scaling to fill wide screens
- *CineBlack™* and *CinePalette™* for deep film-like blacks and superior colorimetry
- *CineCanvas™* for flexible telecine-grade resizing, subtitling, and other text and graphic overlays
- Two SMPTE 292M cinema inputs, used individually or simultaneously for high-speed dual-link processing, and each supporting *CineLink®2* local link encryption
- Dual DVI (Digital Visual Interface) connectors for alternative “non-cinema” content, used individually or simultaneously for high-speed dual-link processing
- Screen brightness: Up to 14 fL on 90-ft. screen
- Achievable contrast ratio 450:1 ANSI, 2100:1 full field on/off in center.
- *LampLOC™* motorized lamp alignment (automatic or custom bulb positioning)
- *LiteLOC™* for maintaining brightness over time
- Simple single-button “Start Feature” function via *Touch Panel Controller™*
- Auto-detection of a variety of SMPTE 292M input formats *(incoming interlaced formats require proper 3:2 or 2:2 pull-down time code)*
- Internal douser (shutter) for quick picture muting and cool stand-by mode
- Bit depth of 45 bits, 35.2 trillion colors
- New ruggedized lens mount that accepts the new High Brightness (HB) lenses as well as previously available High Contrast (HC) lenses
- Choice of High Brightness and High Contrast zoom lenses *(from 1.25:1 up to 8.5:1)*
- Optional Motorized Auxiliary Lens Mount (for 1.25x anamorphic or 1.26x wide converter lenses)

- Communication ports for remote control of the projector via PC or other controller
- High-security tamper-resistant lid lock, with all access electronically monitored
- DC2K 3D Triple Flash functionality, capable of projecting full resolution 3D images under a 6:2 frame rate multiplication.
- HDCP decryption on both DVI inputs allows display of copy protected alternate content.

1.1.3 How the Projector Works

The *CP2000-SB* accepts a variety of cinema or DVI-compatible non-cinema signals for projection on front screens typical in a commercial theatre or other large screen applications. High brightness light is generated by a short arc Xenon lamp, then modulated by three DMD (Digital Micromirror Device) panels responding to incoming data streams of digitized red, green or blue color information. As these digital streams flow from the source, light from the responding "on" pixels of each panel is reflected, converged and then projected to the screen through one or more front lenses, where all pixel reflections are superimposed in sharp full-color images.

1.2 List of Components

Ensure that you have received the following components.

- Pedestal on casters, with 4 retractable feet installed
- Projector Head with lens mount (installed) and auxiliary lens mount (optional)
- Touch Panel Controller with mounting hardware
- Lamp
- Lens (plus anamorphic or wide converter lens, optional)
- Standard-security keys, high-security keys and assembly hardware
- *CP2000-SB User Manual*
- Refer to **Figure 3-1 Basic Projector and Related Components, on page 3-2**.

1.2.1 Power and Lamp Requirements

POWER LEVELS: The *CP2000-SB* offers higher power for the largest venues. The *CP2000-SB* uses a 7 kW pedestal (P/N 101-101101-01). This is the only pedestal available for this model. Refer to *Section 8.5 Power Specifications*. **NOTES: 1)** *The CP2000-SB pedestal does not include an internal convenience outlet.* **2)** *All 7 kW ballasts used in CP projectors are limited by software to 6.6 kW use.*

LAMPS: The *CP2000-SB* accommodates different lamps. Refer to *Section 8.6 Lamps* for a complete list of supported lamps.

OTHER: Optional Christie components include other primary zoom lenses, a motorized auxiliary lens mount and lens, DCP Librarian setup software, and high-security locks. Refer to *Section 8 Specifications*.

1.2.2 Software Requirements

DLP version 14 series or higher

TPC version 2.9 or higher

1.3 Purchase Record and Service Contacts

Whether the projector is under warranty or the warranty has expired, Christie's highly trained and extensive factory and dealer service network is always available to quickly diagnose and correct projector malfunctions. Complete service manuals and updates are available to service technicians for all projectors. Should you encounter a problem with any part of the projector and require assistance, contact your dealer or one of the Christie service depots listed on the back cover of this manual. In most cases, servicing is performed on site. If you have purchased the projector, fill out the following information and keep it with your records.

Table 1.1 Purchase Record

Dealer:	
Dealer Phone Number:	
Pedestal and Head Serial Numbers*:	
Purchase Date:	
Installation Date:	

***NOTE**: *Both serial numbers are located at the rear of the projector.*

Table 1.2 Ethernet Settings for This Projector

The following Ethernet settings were defined during installation of the *CP2000-SB* and the *Touch Panel Controller*:

Default Gateway:	
DNS Server:	
CP2000-SB Projector Address:	
Projector:	
Subnet Mask:	
Touch Panel Controller Address:	
Touch Panel Controller Device:	
Subnet Mask:	

1.4 Who Should Use This Manual

USERS / OPERATORS: This manual is intended for trained users authorized to operate professional high-brightness projection systems located in restricted areas such as projection rooms in theatres. Such users may also be trained to replace the lamp and air filter, but cannot install the projector or perform any other functions inside the product enclosures.

SERVICE: Only trained and qualified Christie service technicians knowledgeable about all potential hazards associated with high voltage, ultraviolet exposure and high temperatures generated by the lamp and associated circuits are authorized to assemble/install the projector and perform service functions inside product enclosures.

1.4.1 Typographical Notations

The following notations are used throughout this manual:

- Keypad commands and PC keystrokes appear in bold small caps, such as **POWER, INPUT, ENTER** etc.
- References to specific areas of the document appear italicized and underlined. When viewed online the text appears in blue indicating a direct link to that section. For example, *Section 8 Specifications*.
- References to other documents appear italicized and bold, such as ***Christie Service Manual.***
- References to software menus and available options appear bold, such as **Main Menu, Preferences.**
- User input or messages that appear on screen, in status display units or other control modules appear in Courier font. For example. **"No Signal Present", Login: christiedigital.**
- Error codes, LED status appear in bold, e.g. LP, A1 etc.
- Operational states of modules appear capitalized, such as power ON, power OFF.
- Signal words, such as Warning, Caution and Notes are used in this manual to point the reader to specific information or instructions that warn of safety related hazards which may be present and indicates how to avoid them.

2 Installation & Setup

This section explains how to install, connect and optimize the projector for delivery of superior image quality. **NOTE:** *The illustrations provided are to enhance the understanding of the written material. They are graphical representations only and may not represent your exact projector model.*

- *2.1 Assembly and Connection of Components*
- *2.2 Installing and Connecting Sources*
- *2.3 Connecting for Communications*
- *2.4 Adjusting Tilt and Leveling*
- *2.5 Initial Power Up*
- *2.6 Maximizing Light Output*
- *2.7 Basic Image Alignment*
- *2.8 Offset and Boresight Alignment*
- *2.9 Fold Mirror and Convergence Adjustments*

2.1 Assembly and Connection of Components

These instructions describe how to:

- mount the projection head onto the pedestal
- position the projector relative to the port window and screen
- connect pedestal-to-head cabling and cooling hoses
- customize projector for *CP2000-SB* lamps
- connect exhaust ducting and fill liquid cooling system
- ns and lamp
- connect to power

⚠ WARNING 1) DO NOT misplace High Security keys, which are packed with the projector. Replacement involves dispatching a field technician to the site at owner's expense. 2) Qualified technician required for all installation steps. Do not modify circuits or wiring.

Before You Begin

You will require the following for installation:

- Full understanding of all site requirements and characteristics
- 12" screwdrivers: Phillips (magnetic) and flat
- Assorted wrenches such as 7/8" and 3/4"
- Assorted Allen keys such as 3/16", 7/64", 5/32", and M3
- 3-phase 4-wire, 5-wire, or 6-wire connection of AC supply to Terminal Block 1 in pedestal (certified electrician required)
- Heat extractor (such as inline centrifugal blower Elicent model# AXC 315B) or roof extractor providing at least 450 CFM (2 or 3 kW lamps) or 600 CFM (4.5 or 6 kW lamps) at 8" exhaust duct opening @ 600 watts or lower. **NOTE**: *Mount at an external location*
- Lamp and protective clothing / safety gear
- Laptop computer with DCP Librarian setup software with Ethernet or standard RS-232 cable
- Vapor-free dustoff type compressed air can
- Latex lab gloves
- Lens cleaning tissue and solution (refer to *Section 6.3 Maintenance and Cleaning*)

2.1.1 Projection Head and Pedestal

STEP 1 - Secure Projection Head to Pedestal

a. Roll the pedestal as close as possible to its permanent location, with its front toe facing the port window wall.

b. Inside the pedestal, at the rear of the top frame, turn the knob to extend the safety prop above the pedestal frame. This stop will then elevate the rear of the projection head until fingers are safely out of the way. See **Figure 2-1 Step 1**.

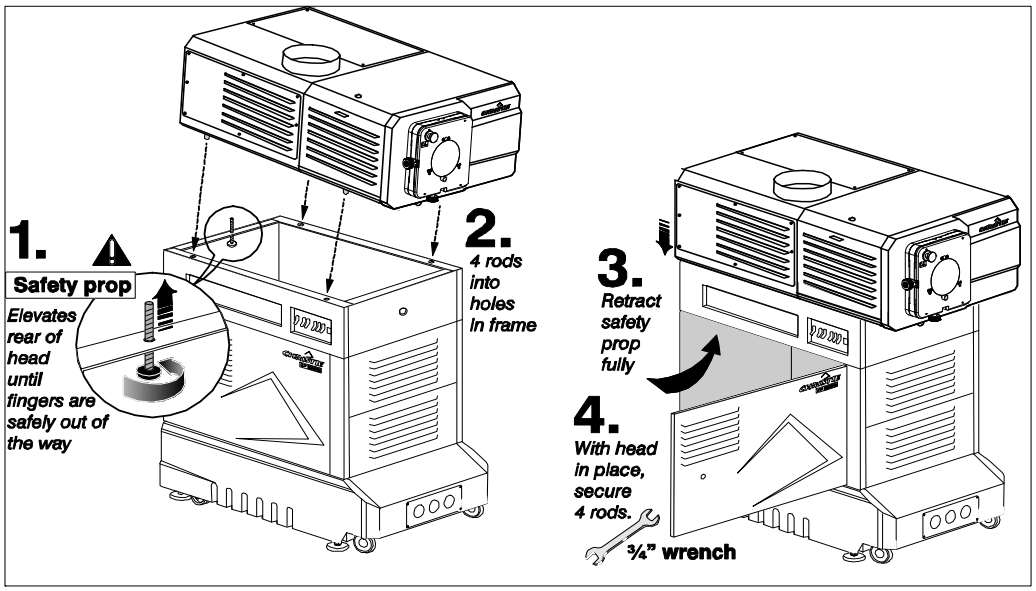

Figure 2-1 Assembling Projection Head with Pedestal

c. Lift the projection head onto the pedestal, aligning the four threaded rods with the four holes in the pedestal frame. **Warning!** *Requires at least two people. For cable connections, maintain cable ties that have been trimmed, and those that are not.* The front of the head will sit on the front of the pedestal frame and the rear will be elevated by the safety prop.

d. Retract the safety prop until the rear of the projection head sits on the rear of the pedestal frame. All four threaded rods will be fully inserted through the holes in the top of the pedestal. Secure the safety prop (***do not leave loose***).

e. Secure head-pedestal assembly with four washers/nuts tightened snugly on to the four threaded rods.

STEP 2 - Position CP2000-SB at Port Window

Roll the projector until its base is approximately 2 feet from the port window wall, 3 feet if auxiliary lens mount will be added (optional). Center with the theatre screen (<–>) if possible (**Figure 2-2, A**). If forced to be off-center (such as when a film projector is already present), try to optimize *aim* as shown in **Figure 2-2, B**. This will slightly increase side keystoning, but will minimize required horizontal lens offset.

NOTE: *Unlike film projectors, it is best to keep the projector lens surface as parallel to the screen as possible, even if it is significantly above the screen center.*

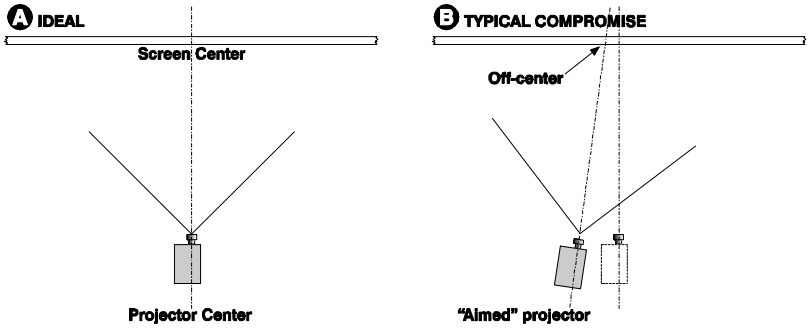

Figure 2-2 Centering < > (Aerial Views)

Note that when a particularly short throw distance combines with a very wide screen, you may have to forfeit some aim and stay more parallel to the screen. In such cases, some lens offset can reduce the keystone distortion. Later, when your projector is up-and-running, adjust precise image geometry and placement as described in *Section 2.7 Basic Image Alignment*.

STEP 3 - Extend All Feet

For permanent installations and more stable images, the projector should be firmly on the floor rather than on its casters. Extend (rotate) the foot located behind each caster until the lens opening is fairly well-centered with the port window (**Figure 2-3**). Lock top nut in place. Remove caster if desired. **NOTE:** *There is no need to adjust leveling and/or tilt at this point—wait until all other components are mounted/installed, and refer to* Section *2.4 Adjusting Tilt and Leveling*.

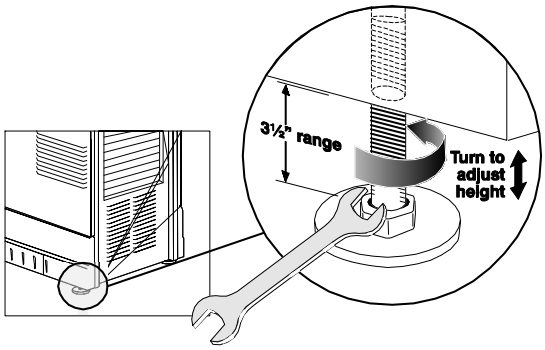

Figure 2-3 Adjust Feet

STEP 4 - Install Touch Panel Controller

a. Attach the Touch Panel Controller (TPC), pre-assembled with its ball joint base and mounting arm, to the matching ball joint base secured at the rear of the projector (**Figure 2-4**).

b. Connect to the TPC cable routed through the nearby hole in the projector rear. The other end of this cable is pre-connected to the internal Ethernet hub and the 24V power supply.

If desired, you can mount the TPC and its 24V power supply elsewhere at the site. Route the TPC cable through either the rear or front hole on the projector. Cap the unused hole.

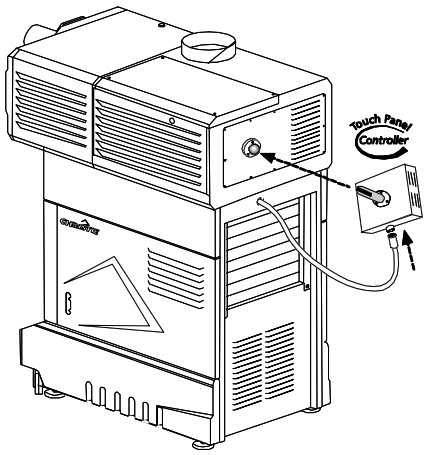

Figure 2-4 Typical TPC Mounting

STEP 5 - Connect Pre-Installed Cabling (Pedestal-to-Head)

Numerous cables are pre-installed within the pedestal and must be routed up to the underside of the projection head, where they connect to one of three panels (or two IEC power sockets). Connect pedestal-to-head cabling as follows:

NOTE: *For all cable connections, keep cable ties that have been trimmed at manufacture, but remove temporary ties that are untrimmed and have tails.*

a. Open both pedestal doors (**Figure 2-5**).

b. Open the rear side door on the operator's side.

c. **SET BALLAST AC INPUT SWITCH:**
Before connecting the ballast to AC, set the ballast's AC input switch to match the AC available at the site. Toggle left for nominal 200 VAC supplies and toggle right for 400 VAC supplies. The factory default is 200 VAC.

d. **BALLAST RS-232 CABLE:**
Connect the ballast's RS-232 cable 34-002075 to Panel B (9-pin), routing through the small rectangular access hole in the ***front*** underside of the projection head (**Figure 2-6**).

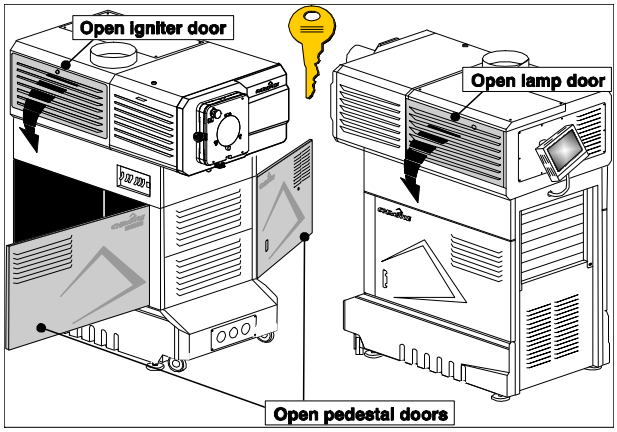

Figure 2-5 Open Projector for Access

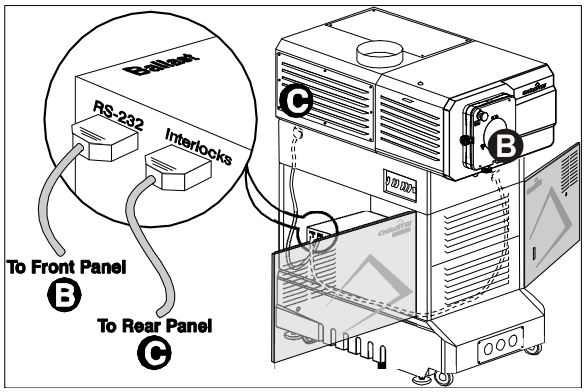

Figure 2-6 Connect Ballast RS-232 and Interlocks to Projection Head

e. **BALLAST INTERLOCK CABLE:**
Connect the ballast's interlock cable 34-002007 to Panel C (9-pin), routing through the small rectangular access hole in the ***rear*** underside of the projection head (**Figure 2-6**). Ensure a second connector from Panel C to Panel B is connected (P/N 001-100376-01). The remaining third connector is a non-functional spare.

f. **POWER CABLES TO HEAD:**
From behind the main AC breaker panel (within the pedestal), connect both identical power cables 34-001992 to the IEC receptacles located near Panel B (100-230 VAC) and Panel C (200-230 VAC). Connect either cable to either receptacle (these cables are interchangeable) and secure with metal strain-relief clip provided (**Figure 2-7**).

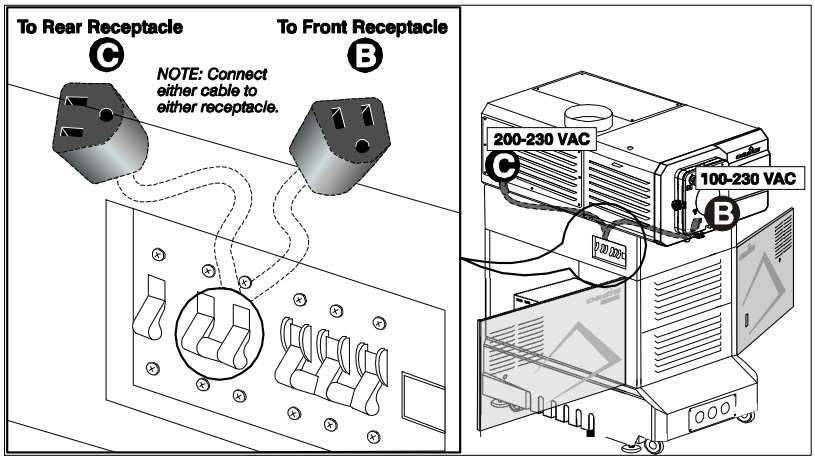

Figure 2-7 Connect Projector Breaker Power Cables to Projection Head

Important! *Components in the lamp compartment will require 200-230 VAC.*

NOTE: *If you prefer to use an uninterruptible power supply (UPS) for supplying power to the projection head, route the UPS power cables through the pedestal toe and connect to the IEC receptacles on Panel B (100-230 VAC). In this case, only one power cable provided in the pedestal is used.*

g. **CHECK ETHERNET AND TPC POWER:**
Within the pedestal, confirm that the power supplies for the Ethernet hub and TPC are directly connected to the terminal block. (**Figure 2-8**).

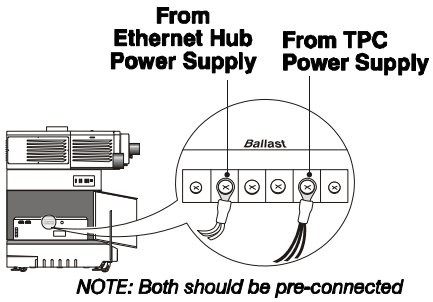

Figure 2-8 Check TPC and Ethernet Hub Connections to Power

h. **CONNECT LAMP LEADS:**

1. Ensure the igniter door is open. From the ballast in the pedestal, route the main black and white lamp leads through the nearby hole in the underside of the projection head. See **Figure 2-9**.

2. Route the **NEGATIVE (-) BLACK** lamp lead through the hole in the lamp cooling compartment wall. **Warning! 1)** *Ensure the PCB is directed toward the back and remains at least ¾" from the high-voltage terminal (with braid connection).* **2)** *Route all igniter wires AWAY from 9-pin and 15-pin connectors.* **3)** *Twist both ballast cables twice-per-foot.*

3. Connect the **POSITIVE (+) WHITE** lamp lead to the **POSITIVE (+)** igniter terminal (3/4" wrench). This terminal also has a small PCB attached—stack this on top of the lamp lead.

4. Close and lock the igniter door.

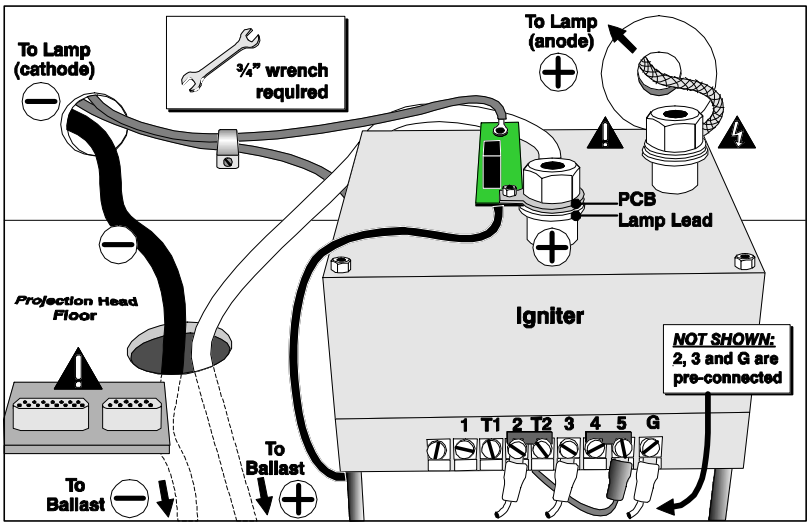

NOTES: 1) Orient the PCB as shown (capacitor may be inverted on some projectors). Do not direct to left or right, and maintain at least ¾" clearance from the high voltage anode connector. 2) Lead dress all igniter cables AWAY from 15-pin and 9-pin connectors near the hole in the projection head floor. 3) Within pedestal, twist the ballast cables twice-per-foot.

Figure 2-9 Connect Lamp Leads

IN THE LAMP COOLING COMPARTMENT:

5. With the lamp door removed (refer back to **Figure 2-5**), turn the small knob and swing open the lamp cooling compartment door (**Figure 2-10**).

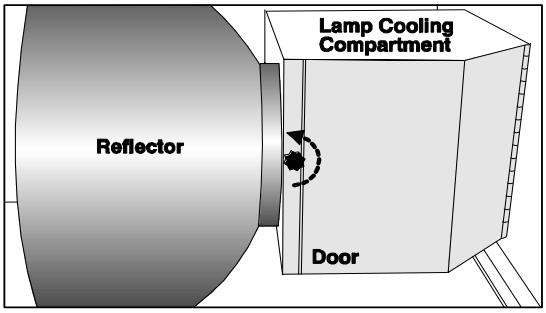

Figure 2-10 Accessing Cathode End

6. Route the **NEGATIVE (–) BLACK** lamp lead through the hole in the cooling compartment floor (**Figure 2-11**). The igniter wires from terminal **5** and the PCB are also routed here.

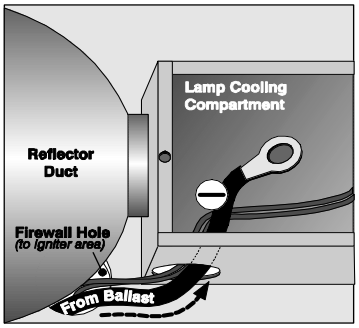

Figure 2-11 Feed Black Lead into Compartment

7. A universal connector nut should be pre-installed on the cathode-end lamp post. Regardless of model or lamp size, this nut is ***1.658"*** in overall length. See right. **NOTE:** *The universal nut shown accommodates all models. Do not install a shorter nut.* **Important!** *Ball joint must move freely. If necessary, hand tighten with 9/64" Allen key.*

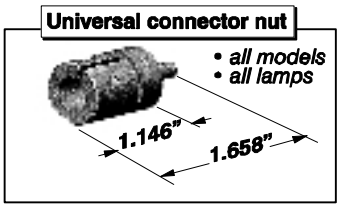

Figure 2-12 Connector Nut

8. With 3/16" Allen key, secure the **NEGATIVE (–) BLACK** lamp lead and the two igniter harnesses to the side of the connector nut. **Important!** *Secure lamp lead FIRST on connector, then remaining two igniter wires on TOP.*

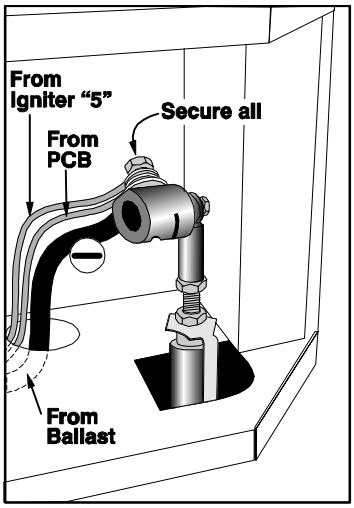

Figure 2-13 Secure Lamp Lead and Two Igniter Wires

At this point, the lamp pre-wiring is complete. Leave lamp accessible for now.

STEP 6 - Connect Two Cooling Host Ends (Pedestal-to-Head)

During operation, a closed loop of flexible tubing circulates cooling liquid stored in the pedestal to critical electronics components located in the front compartment of the projection head. Looking into the pedestal, the liquid will circulate counterclockwise. **NOTE**: *The TOP graphic in* **Figure 2-14** *is for pedestals manufactured before Fall 2006. The BOTTOM graphic in* **Figure 2-14** *is for pedestals manufactured for Fall 2006 and after.*

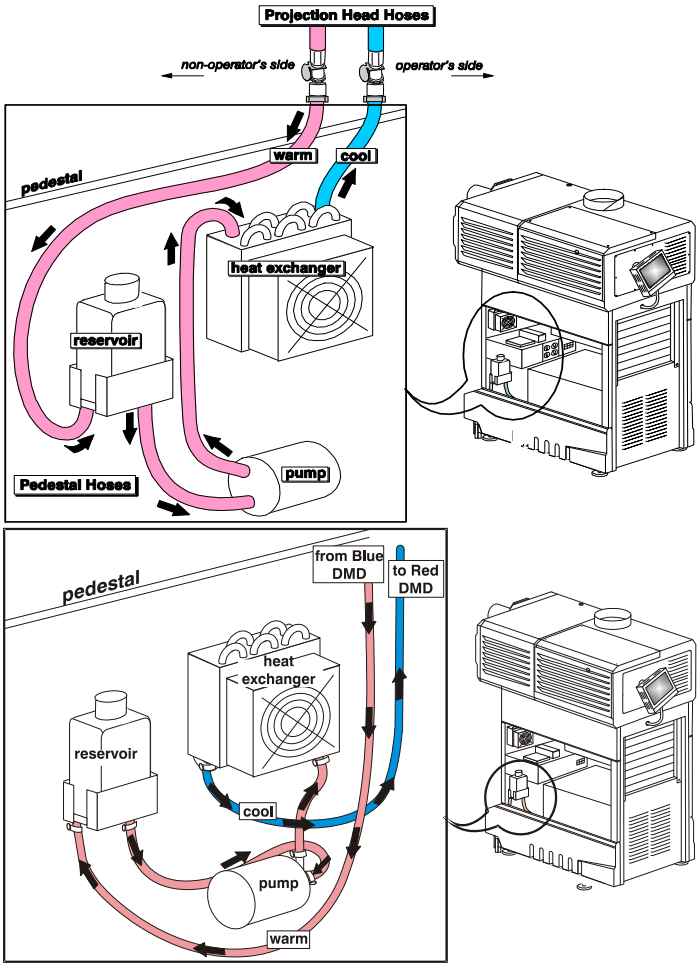

Figure 2-14 The Liquid Cooling Loop

a. To create this loop, connect the ***OUT/warm*** and ***IN/cool*** hoses as described below. **NOTE**: *Hose connections may not be labeled*. Be sure to depress each hose connector tab before inserting the hose end, then release to seal (**Figure 2-15**). This prevents damage caused by forcing the gasket end into a closed connector. Listen for a click.

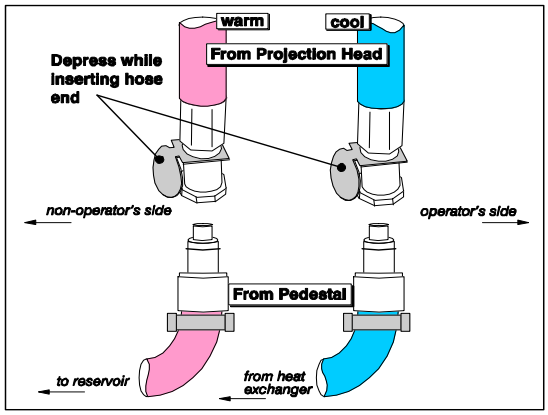

Figure 2-15 Connecting the Hoses

b. The long loose hose connected to the ***reservoir*** is the OUT/warm hose from the projection head. Connect to the projection head location ***closest to the non-operator's side*** of the projector.

c. The short loose hose connected to the ***heat exchanger*** is the IN/cool hose. Connect to the projector head location ***closest to the operator's side*** of the projector.

Important! *To prevent damage to the sealing gasket, always depress the connector tab when inserting the hose end. Avoid forcing together and listen for click.*

STEP 7 - Fill the Reservoir Completely (Initial Filling for Hosts Only)

After connecting the hoses, completely fill the cooler reservoir with Christie approved coolant Jeffcool E105 provided in the liquid coolant fill service kit (P/N 003-001837-02). **Danger!** *HAZARDOUS SUBSTANCE - The coolant used in this product contains ethylene glycol. Use caution when handling. Do not ingest.* For this first filling, fill the reservoir completely. Virtually all of this first supply of liquid will be drained into the hoses upon initial power-up, at which point the reservoir must be re-filled to the correct level at the gauge window. Refer to *Section 2.5 Initial Power Up*.

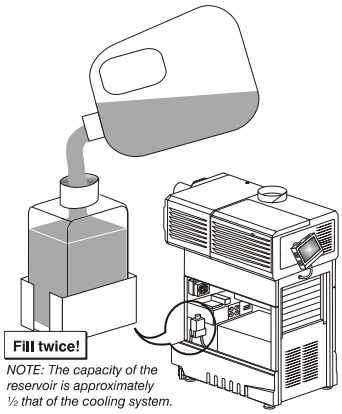

Figure 2-16 Fill Reservoir

STEP 8 - Check Lead Dressing & Hoses

a. At this point, integral pedestal-to-head cabling and hose connection should be complete. Check all lead dressing and secure as neatly as possible to prevent extra cable lengths from dangling or touching other components. Provide proper strain relief as necessary. Ensure hoses are free of kinks and sharp turns.

b. Connect sources and communication links at any time. Refer to *Section 2.2 Installing and Connecting Sources* and *Section 2.3 Connecting for Communications.*

2.1.2 Exhaust Ducting

Warm exhaust air from the *CP2000-SB* must vent to outside of the building. Connect pre-installed outside-venting ductwork via 8” inside diameter fireproof ducting material attached to the projector’s top exit port. Confirm that 1) there are no obstructions or kinks within the ducting, 2) all air intake areas of the *CP2000-SB* are clear and exposed, and 3) the vane switch at the exit duct is moving freely. The pre-installed outside-venting duct should be *rigid for a 10” length* at the projector and must also include a heat extractor/blower that maintains at least 450 to 600 CFM when measured at the projector exhaust opening, depending on the lamp. See **Table 2.1**.

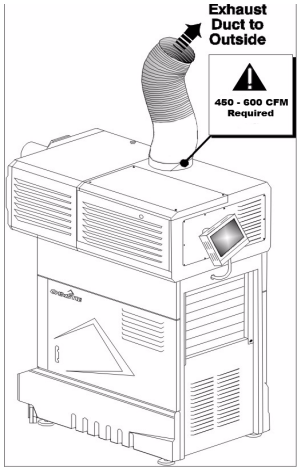

Figure 2-17 Attach Exhaust Ducting

Table 2.1 Airflow Requirements

Lamp (kW)	Minimum Exhaust Airflow Rate
2 or 3	450 ft^3/min.
4.5 or 6	600 ft^3/min.

CALCULATE CFM in 8” DUCT:

Use an air flow meter to measure the ft/min or ft/sec at the rigid end of the duct that will connect to the projector (measure *right at the end*). Then multiply the reading by the cross-sectional area of the 8” duct to calculate the cubic feet/min airflow. The formula is: **Measured linear ft/min x 0.34 = CFM**

Depending on the lamp, calculations should show 450 or 600 CFM airflow (see **Table 2.1**) in the 8” exhaust duct. Add extractors/boosters as needed for your site, as the vane switch (see right) will prevent the projector from operating if the airflow is inadequate. Do not mount extractor on the projector. **NOTE:** *If the duct becomes significantly blocked—or if a fan fails—the projector should trigger an alarm before becoming overheated or unsafe. Regardless, check airflow regularly as described in* *Section 6.2 Maintaining Proper Cooling*. **Warning!** *Never disable a vane switch. Attempting to operate the projector with inadequate airflow can result in dangerous overheating of the projector.*

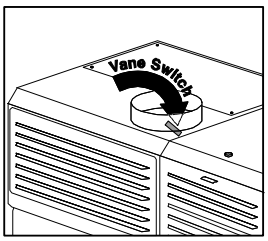

Figure 2-18 Vane Switch

2.1.3 Lens(es)

Primary Zoom Lens

1. Fully insert the lens assembly straight into the lens mount opening *all the way back without turning*. With the lens fully back, it will seat properly within the lens mount. **NOTE:** *High Contrast lenses (only) have a flat on the rear flange. Rotate the lens so that the flange clears two screws in the mount. Also ensure the UP label is at the top to ensure proper aperture orientation.*
2. Lock the lens assembly in place with lens clamp DOWN. **NOTE:** *The lens seals the projector head, preventing contaminants from entering the area of main electronics. Never attempt to operate the projector without a lens installed.*
3. Calibrate the lens. See *Section 2.7 Basic Image Alignment* for details.

Anamorphic Lens or 1.26x Wide Converter Installation (Optional)

NOTE: *Required only for 1.25x anamorphic lens or 1.26x wide converter lens producing 2.39:1 scope images.*

If the anamorphic or wide converter lens will be used, it is recommended that you now add the lens—and its motorized mount—so that the additional weight will be present when correcting later for final leveling and boresight adjustments. Install only for those installations requiring full-size 2.39:1 scope images (mostly side-masking screens).

1. **INSTALL THE AUXILIARY LENS MOUNT ON THE PROJECTOR**

   At the front of the projector, install the motorized auxiliary lens mount hardware as described in the instructions provided with the auxiliary lens mount kit.

2. **INSTALL THE AUXILIARY LENS**

   Clamp the anamorphic or wide converter lens mount in place, following the instructions provided with the lens mount kit. For details, refer to *Section 2.8.5 Add Auxiliary Lens*.

2.1.4 Install First Lamp

The *CP2000-SB* accommodates different lamps. Refer to *Section 8.6 Lamps* for a complete list of supported lamps.

1. **REVIEW LAMP PRE-WIRING**

   Review all lamp pre-wiring as described on the previous pages, ensuring that all leads and harnesses are connected correctly and that the universal cathode connector nut is secured to the rear lamp post.

2. **CHECK LAMP CRADLE (ANODE END) LOCATION FOR YOUR LAMP**

   - For 4.5 or 6.0 kW lamps, the lamp cradle must be as far forward as possible (factory default).
   - For 2.0 or 3.0 kW lamps, move the cradle to the rear position, i.e., approximately 1” closer to the reflector (**Figure 2-19**).

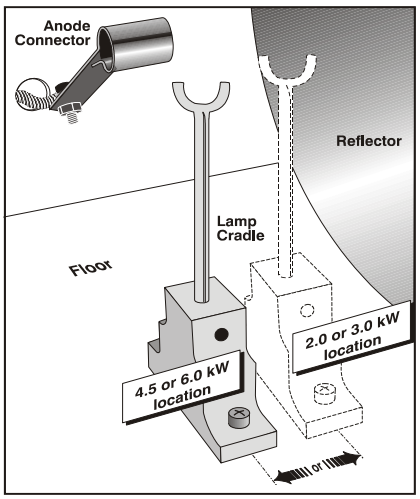

Figure 2-19 Lamp Cradle Position

3. **INSTALL LAMP**

   Refer to Steps 7-10 from *Section 6.4 Replacing the Lamp & Filter*. Observe all warnings, and wear protective clothing and shielding.

2.1.5 Connecting to Power

Connecting the projector to your AC supply can vary according to the country in which the projector is installed. The five scenarios are explained below. For any installation, always follow the electrical code for your country. **Warning! 1)** *Certified electrician required. Follow the Terminal Block 1 (TB1) Connections diagram located on the inside of the pedestal.* **2)** *Installation of the pedestal's conduit panel is MANDATORY to avoid risk of electric shock causing bodily harm or even DEATH.*

1. From the AC power source, route the 3-phase wires, single-phase and ground wires into one of the knock-out holes located on the pedestal's conduit panel. Use appropriately sized strain relief connectors with the conduit panel. This will ensure adequate environmental sealing and prevent cables from wear and being accidentally torn out. **Warning!** *Use of the conduit panel is mandatory to prevent electric shock.*
2. Connect the incoming AC ground lead directly to the frame ground stud on the floor of the pedestal (**Figure 2-20**). Secure with both washers and nut provided, and ensure there are *no* other wires present at this stud. **Warning!** *Connect ground FIRST to reduce shock hazard from high leakage.*

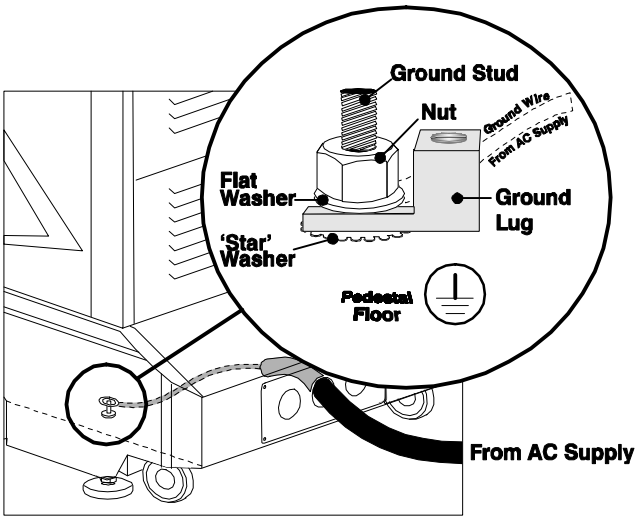

Ground Connection - Ground Lug

Figure 2-20 Connect Incoming Ground Wire

3. Refer to the Terminal Block 1 (TB1) Connections diagram provided on the inside of the pedestal door (operator's side). As described for your model and site, connect all available wires to the large terminal block (TB1) located in the operator's side of the pedestal. **NOTES: 1)** *The Terminal Block 1 (TB1) described below accommodates up to 6 AWG wire.* **2)** *For proper torque, a flat screwdriver with 4-6mm blade is recommended.* **3)** *Ensure to refer to the Terminal Block 1 (TB1) Connections diagram located in the pedestal.*

180-235 VAC (N. America, Japan, most of Central/South America, etc.):

- ***If 3-phase and single-phase feeds (6-wire):***
  - Make sure ground wire is connected directly to the frame ground stud on the pedestal floor. Attach *no* other wires here.
  - Connect L and N @ 200-230 VAC (single-phase)
  - Connect 1, 2, and 3 @ 180-235 VAC (3-phase)
- ***If 3-phase with neutral fed from 3-phase (5-wire)***:
  - Make sure ground wire is connected directly to the frame ground stud on the pedestal floor. Attach *no* other wires here.
  - Connect 1, 2, 3, and N @ 180-235 VAC (3-phase)
  - No L available. Connect jumper from 1 to L.
- ***If 3-phase only (4-wire)***:
  - Make sure ground wire is connected directly to the frame ground stud on the pedestal floor. Attach *no* other wires here.
  - Connect 1, 2, and 3 @ 180-235 VAC (3-phase)
  - No L or N available, so the internal outlet will not be functional.

342-456 VAC (Europe, etc.):

- ***If 3-phase and single-phase feeds (6-wire):***
  - Make sure ground wire is connected directly to the frame ground stud on the pedestal floor. Attach *no* other wires here.
  - Connect L and N @ 200-230 VAC (single-phase)
  - Connect 1, 2, and 3 @ 342-456 VAC (3-phase)
- ***If 3-phase with neutral fed from 3-phase (5-wire)***:
  - Make sure ground wire is connected directly to the frame ground stud on the pedestal floor. Attach *no* other wires here.
  - Connect 1, 2, 3, and N @ 342-456 VAC (3-phase)
  - No L available. Connect jumper from 1 to L.
- ***If 3-phase only (4-wire)***:

  This configuration is not possible. Use 5-wire or 6-wire only. Neutral is required. **Warning!** *Ground (earth) connection is necessary for safety. Never compromise safety by returning current through the ground.*

Special Adjustments for Some AC Supplies

AC levels can vary depending on region. Check the following when installing.

NOTES: 1) *Requires voltmeter for up to 400 VAC.* **2)** *Consult the Interconnect Drawing in pedestal.*

JUMPER FROM IGNITER TERMINAL 2:

As set from the factory, the igniter jumper located on terminal **2** connects to **T2**. This configuration is used when 207-265 VAC are present (as it is for most countries). If you find your incoming AC is below 207 VAC, connect terminal **2** jumper to **T1** instead.

- If AC between terminals **2** and **3** is 207-265, connect terminal **2** to **T2** (factory default).
- If AC between terminals **2** and **3** is 180-207, connect terminal **2** to **T1**.

See **Figure 2-21**.

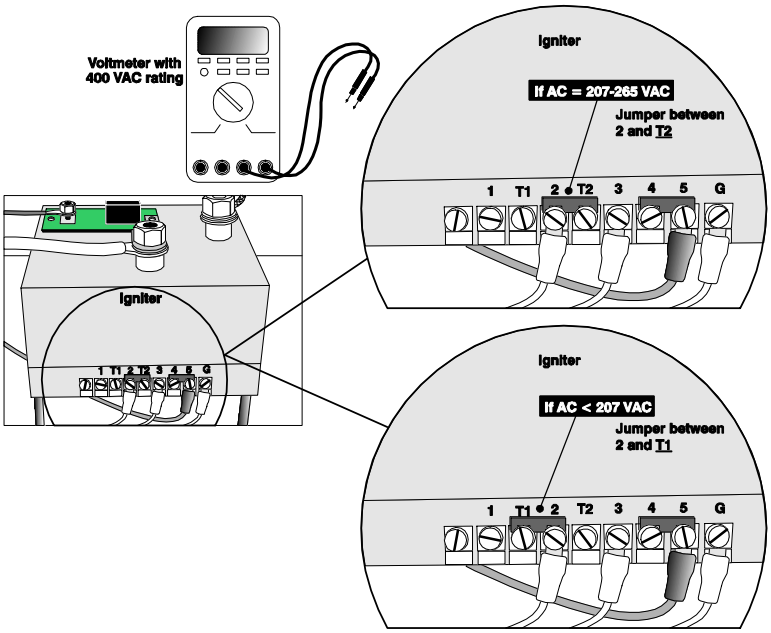

Figure 2-21 Check Voltage and Position Jumper

BALLAST 115 VAC TAPS:

Ensure your nominal line between the terminals labeled **115V** and **COMMON** (or **0V**) is within 10% of 115 VAC. See **Figure 2-22**.

- If your measurement at the 115V terminal is **126.5V or more**, move the 115V wires to the tap labeled **–10%.**
- If your measurement at the 115V terminal is **103.5V or less**, move the 115V wires to the tap labeled **+10%.**

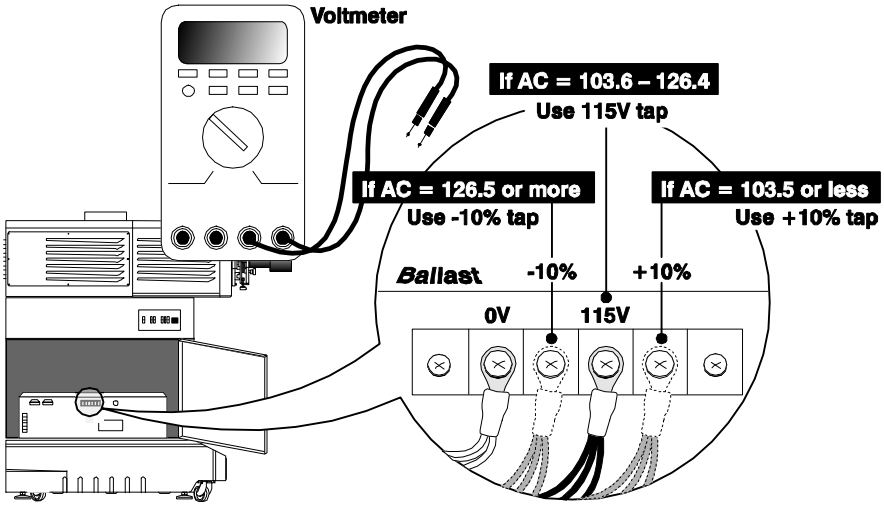

Figure 2-22 Check Voltage Between 115V and Common ("0V")

2.2 Installing and Connecting Sources

Depending on site requirements, cinema servers such as digital media storage devices or non-cinema sources such as PCs either reside outside of the projector, or are rack-mounted directly in the rear of the CP. They must not interfere with CP operation.

Regardless of their mounting location, sources must connect to one of four ports on the *Communication and Source Connection Panel* located on the underside of the projection head. They are typically connected as part of projector installation. Once made, these connections are inaccessible from the outside of a locked projector and can be considered secure and permanent. Changing or adding a source connection requires access via the locked CP pedestal. **NOTE:** *To maintain radiated emissions compliance, do not connect I/0 cables to the projector without connecting the source or receiver at the other end*.

IF EXTERNAL

Source/server cabling routes through the pedestal toe and up to the underside of the projection head. Limit cable length to 300 feet or less. Connect power externally or within the projector. See **Figure 2-23** and **Figure 2-24** (shown are models with internal outlet for North America, etc.). **NOTE***: The DVI ports shown in* **Figure 2-24** *are single-link ports for single-link cable/connectors only. Connect two independent sources, or connect the Cine-IPM 2K to both ports for 10-bit processing. Using this pair of ports as a dual-link pair requires a special adapter (not available).*

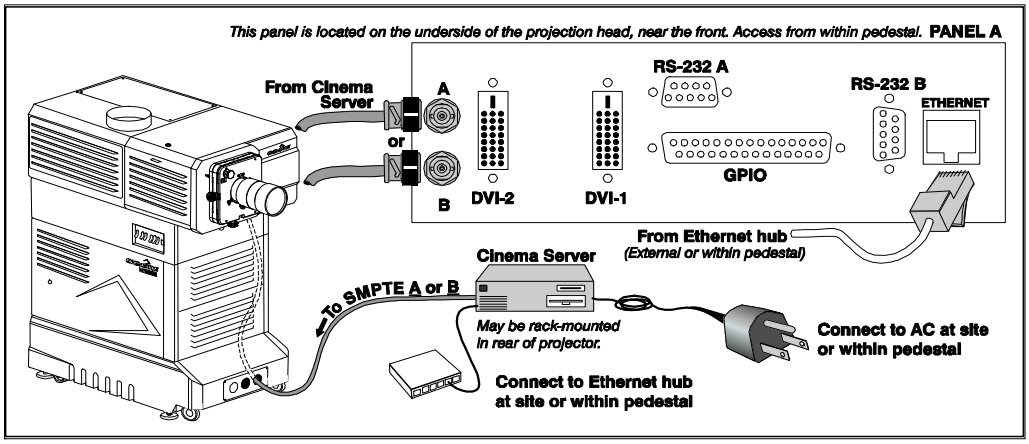

Figure 2-23 Connecting an External Cinema Server/Source

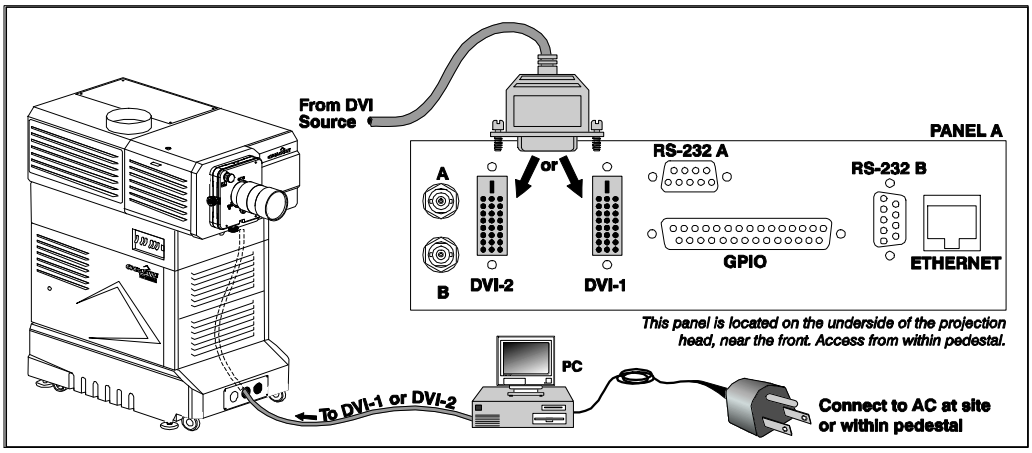

Figure 2-24 Connecting an External Non-Cinema (DVI) Source

IF INTERNAL

Sources/servers are often rack-mounted in the projector rear with cabling routed directly to the underside of the projection head. See **Figure 2-25** and **Figure 2-26**. Install as follows:

1. Remove the pair of rack protector posts from the rear of the pedestal.
2. Remove the required horizontal rack covers (security plates).
3. Rack-mount the desired equipment within the pedestal.
4. Re-install the pair of rack protector posts. Keep extra covers.

Do not modify any CP wiring or lead dress during installation and ensure the added device does not interfere with normal CP operation.

Power normally is hard-wired to the TB2 terminal block. **NOTE:** *Internal power connection is not possible if incoming AC feed is 4-wire 3-phase only, as the TB2 terminal has no power in this case.*

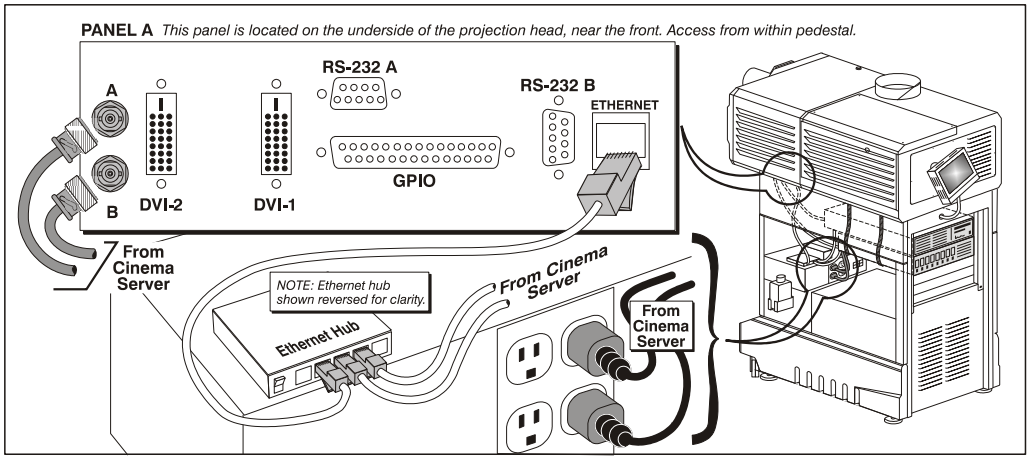

Figure 2-25 Connecting an Internal Cinema Server/Source

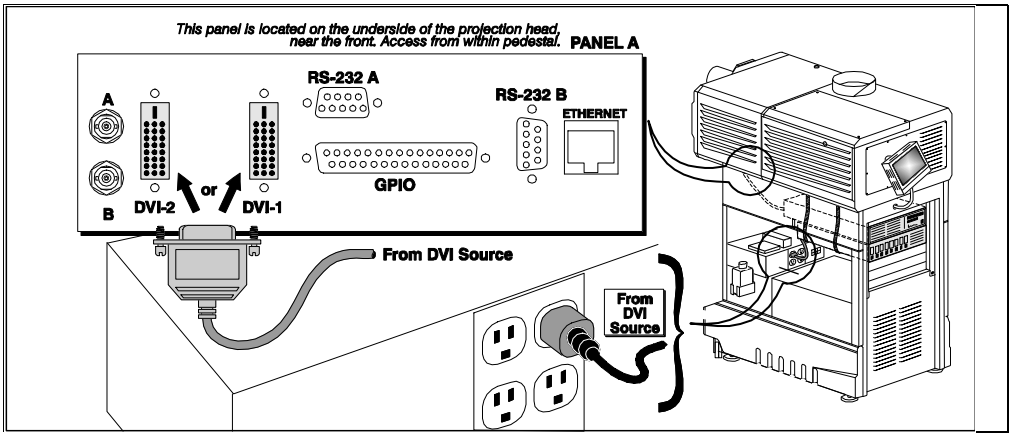

Figure 2-26 Connecting an Internal Non-cinema (DVI) Source

NOTE: *The DVI ports are single-link ports for single-link cable/connectors only. Using as a dual-link pair requires a special adapter (not currently available).*

2.2.1 Support for Internal Servers/Source

A series of holes around the top perimeter of the pedestal frame accommodates strapping for support of internal equipment. To maximize air circulation and cooling within the pedestal, install your longest devices in the highest rack-mount slot available where they will not significantly block airflow.

2.2.2 Security for Internal Servers/Source

Upon installation of a rack-mount server or source within the pedestal, ensure to re-install the pair of vertical rack protector posts at the rear. They will overlap the sides of your rack-mount equipment and help prevent access to the pedestal interior and theft of rack-mounted equipment.

NOTE: *Keep on hand any extra CP rear covers (horizontal plates) removed for rack-mounted equipment. These covers must be re-installed if the equipment is removed from the projector in the future. Do not operate the CP with open slots at the rear.*

2.3 Connecting for Communications

Many communications with the projector are initiated on the Touch Panel Controller (TPC) mounted at the rear of the projector. Depending on the installation, you may also need certain other serial and/or Ethernet links to the ***CP2000-SB***, such as from a server or PC functioning as a controller, or from an existing on-site network including other equipment. Connections are typically done at time of installation, and then the projector is locked and protected from unauthorized changes. In rare cases, serial and/or Ethernet links are needed only by the installer and are disconnected afterwards.

Connect up to a total of five Ethernet links to the 5-port hub within the pedestal, which in turn connects to the *Communication and Source Connection Panel* at the underside of the projection head. For serial communications, always connect to the RS-232 A port on this panel (RS-232 B uses Christie-proprietary protocol intended for Christie accessories only).

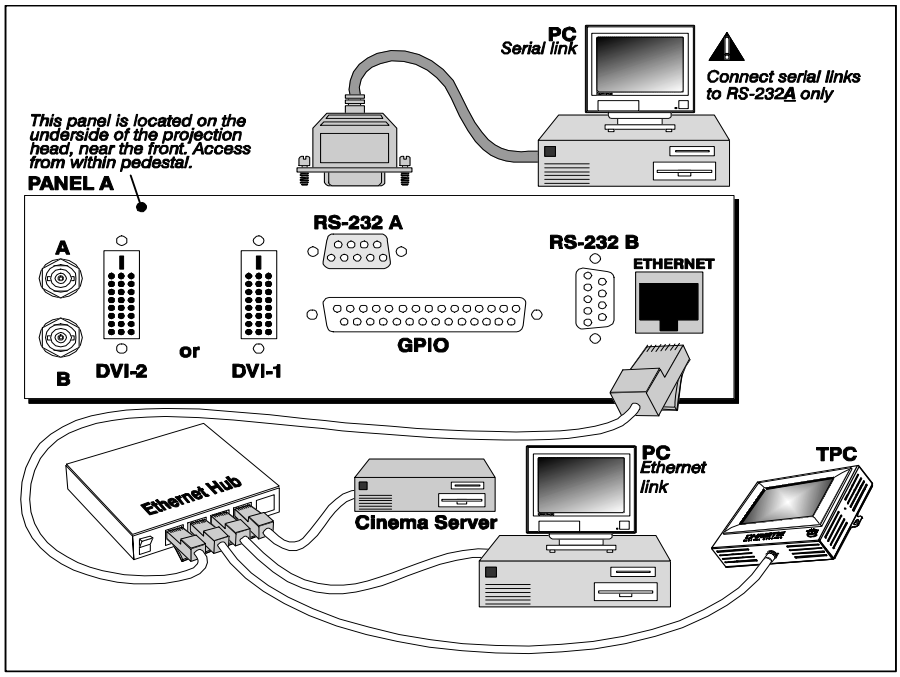

Figure 2-27 Communication Links with Projector

TPC

Connect the TPC cable to the Ethernet hub within the pedestal (this is usually pre-connected from factory).

PC/Laptop, Server or Network

To communicate with the ***CP2000-SB*** from a computer, server or an existing network, connect the equipment to the Ethernet hub within the pedestal. If Ethernet is not available at your site, connect a standard serial cable to the RS-232 A port instead. This communication link is acceptable for using a PC/laptop to run Christie's *DCP Librarian* or to download new software, but is too slow for server communications and does not support ASCII messaging to the TPC (which requires Ethernet). Connect RS-232 as shown in **Figure 2-27**, and route as shown in **Figure 2-23**, **Figure 2-24**, **Figure 2-25**, and **Figure 2-26**. **NOTE:** *For serial communication using a PC, laptop or server, use only the RS-232* ***A*** *port. The RS-232* ***B*** *port utilizes Christie-proprietary protocol intended for Christie accessories only.* **Warning!** *The RS-232 B port is compatible with Christie accessories only.*

2.4 Adjusting Tilt and Leveling

NOTE: *Disconnect from AC for these initial alignments. Images are not yet needed.*

In an ideal installation, the *CP2000-SB* lens surface is *centered with* and *parallel to* the screen. This orientation helps to ensure optimized lens performance with minimal offset (**Figure 2-28**). If this position is not possible (such as when the projector is significantly higher than the center of the screen), it is better to rely on *offset* rather than extra *tilt*.

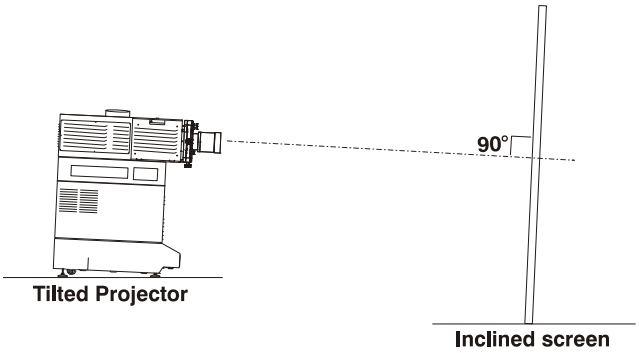

Figure 2-28 Tilt Projector to Match Screen

Before adjusting tilt, ensure the projector is as **WELL-CENTERED** (<–>) with the theatre screen as possible for your installation area (refer back to **Figure 2-2**).

Check with theatre personnel for the degree of screen tilt or measure this incline with a protractor at the screen. Then **TILT** the projector to closely match this screen tilt angle (**Figure 2-29**), following the instructions below:

1. Disconnect the projector from AC power.
2. Use a wrench to rotate front and rear feet until projector tilt matches screen tilt. You can achieve up to 12° tilt by adjusting the feet.

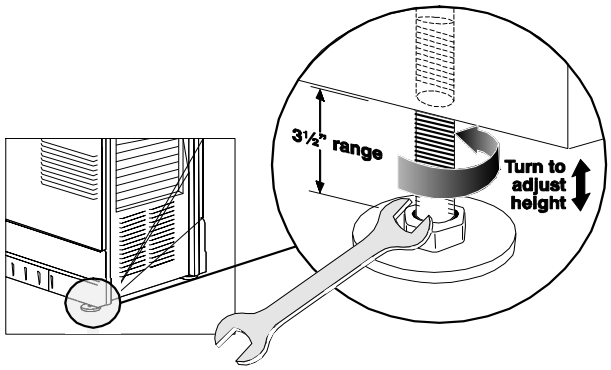

Figure 2-29 Adjust 4 Feet for Tilt and Leveling

In rare cases where additional tilt is needed, you can utilize the rear extender legs as described below.

Important! *For best optical performance, avoid tilting the projector excessively. Use vertical offset of the lens instead.*

3. Remove the rear bottom panel (2 top screws, 2 bottom tabs) from the CP pedestal (**Figure 2-30**).

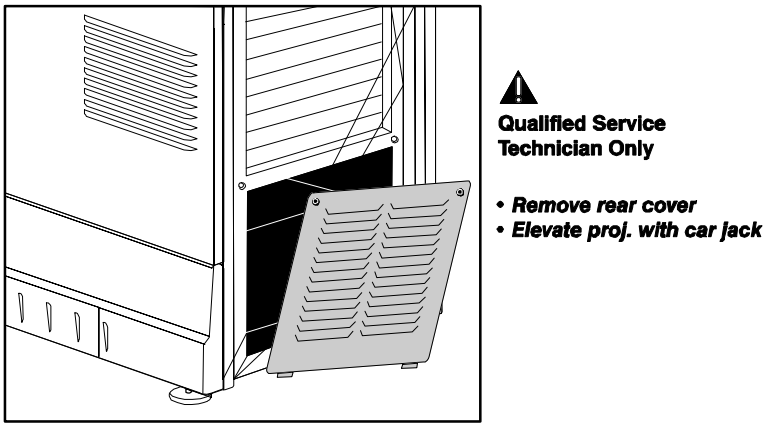

Figure 2-30 Open Rear of Pedestal

4. Use a low-profile scissor jack to elevate the rear of the projector.
5. On each side of the rear opening in the pedestal, loosen the 2 bolts securing the rear extender legs to the projector (**Figure 2-31**).

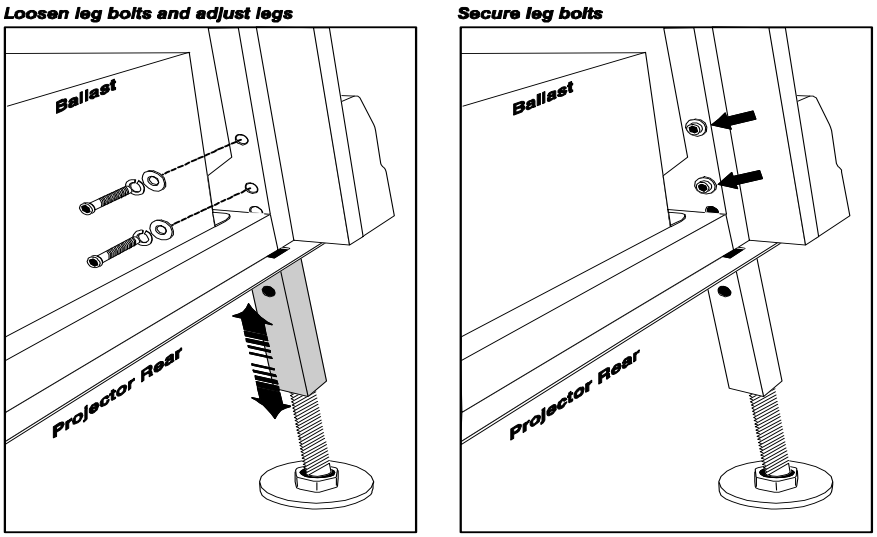

Figure 2-31 Adjust Rear Extender Legs

6. Slide the legs out to the desired position and secure with two bolts.
7. Remove the jack.
8. If necessary, re-adjust all leveling feet for side-to-side leveling (**Figure 2-29**). Note that you may have to adjust level more precisely once an image is present.

2.5 Initial Power Up

STEP 1 - Turn on Breakers

With all components installed and connected, power-up the projector as described in Steps 1 and 2 in *Section 3.2 Power-up Procedure*. ***Do not ignite the lamp yet.***

Important! *Do not ignite the lamp until you have defined the lamp type in Step 6 below.*

STEP 2 - Fill Reservoir a Second Time

Upon initial power up, the first supply of coolant you added will drain into the hoses and fill them leaving the reservoir practically empty. Using Christie approved coolant Jeffcool E105 provided in the liquid coolant fill service kit (P/N 003-001837-02), re-fill the reservoir until the level is close to ***but not above*** the top mark on the gauge located on the outside of the pedestal door (**Figure 2-32**). If you over-fill, remove the reservoir from the pedestal and pour out excess.

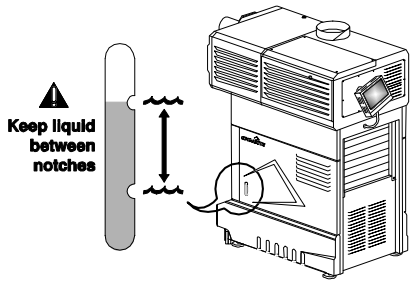

Figure 2-32 Re-fill and Check Level

STEP 3 - Power Down and Up Again

Turn all projector breakers OFF, then ON again to clear air from lines.

STEP 4 - Check for Airlock in Cooling System

After topping up the coolant reservoir, ensure the hose between the reservoir to the pump is completely full upon the next power-up (**Figure 2-33**). **NOTE:** *If the hose is not full, this signifies the presence of an airlock that can interfere with proper circulation of the liquid throughout the projector. Turn the projector OFF then ON once again. The hose should now be completely filled.*

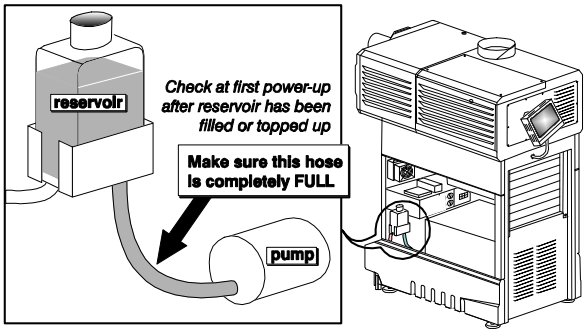

Figure 2-33 Check Hose for Airlock

STEP 5 - Check Fans and Interlocks

Check that fans are running and interlocks are OK.

STEP 6 - Define the Lamp Type

At the TPC, go to the **Advanced: Lamp** menu (password required). Enter the size of the lamp currently installed in the projector (default is 2.0 kW).

STEP 7 - Ignite the Lamp

At the main menu of the TPC, press the **LAMP** button . The lamp should ignite.

2.6 Maximizing Light Output

Upon powering up the projector with a newly-installed/replaced lamp, activate LampLOC™ to automatically adjusts the lamp position to help ensure optimized operation as well as peak brightness at the screen. You do not need an image displayed yet. Once you have done this LampLOC™ adjustment, the lamp will be well-centered and distanced correctly from the remainder of the illumination system.

At the TPC, automatically optimize lamp position by pressing the **Do Auto** button in the **Advanced: Lamp** menu. Watch the gauge on this menu. After 2-3 minutes, the best lamp position will be established (using an internal light sensor) and the **Do Auto** button will no longer be disabled. At this point, light output is optimized.

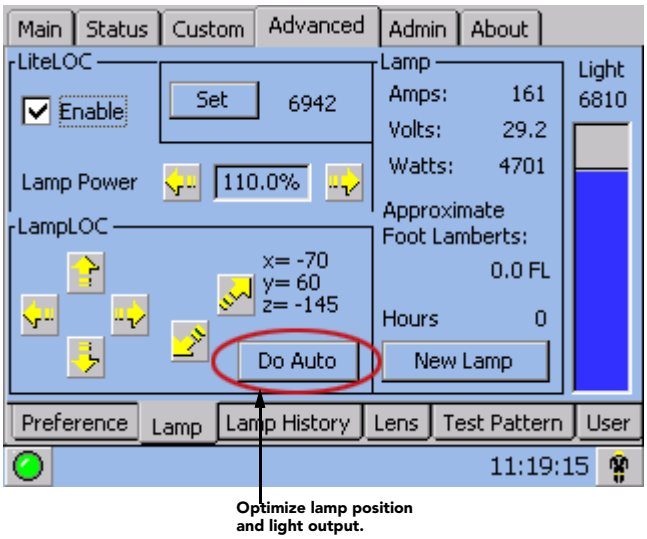

Figure 2-34 Align the Lamp

NOTE: *Lamp must be on and douser (shutter) open during LampLOC™ adjustment. However, the projector does not need to be displaying an image.*

2.6.1 Calibrating Screen Brightness (fL)

In order for the TPC to display screen brightness in footlamberts (fL), you must measure screen brightness at both extremes of lamp power (minimum and maximum) for a given lamp type, and record these two readings in the TPC **Admin: Lamp** menu available to installers. These measurements establish a range (stored in memory) from which the TPC can interpolate all other lamp power settings, converting them to approximate footlamberts for display in the menus. Repeat the calibration if you ever switch to a different lamp type/size.

NOTE: *For more information about menus and footlamberts, refer to Section 3 Operation.*

2.7 Basic Image Alignment

NOTE: *Assumes projector is fully assembled and powered up in its final location.*

This procedure ensures that the image reflected from the DMDs is parallel to and well-centered with both the lens and screen. This initial optical alignment is the foundation for optimizing images on the screen, and must be completed before final boresight adjustments. To save the focus, offset and zoom settings to the channel, you must make the adjustments using the motorized lens mount adjustment features in the **Main: Lens** menu or **Custom: Lens** menu from the TPC. Using the knobs on the lens mount to adjust the position does not save the settings to the channel. They are designed for temporary use and will therefore be lost once the channel changes. Ensure the CP2000-SB is properly positioned relative to the screen before you begin. Refer to **Figure 2-2** and **Figure 2-28**.

2.7.1 Basic Optical Alignment Procedure

1. Display a good test pattern appropriate for analyzing image focus and geometry, such as a single crosshair centered across the image.
2. **COARSE FOCUS:** Do a quick preliminary focus and (if available) zoom adjustment with the primary lens only. Refer to *Section 3.9 Working with the Lens*. Do not worry about consistency across the image at this point, just center focus.
3. **CENTER THE IMAGE IN THE LENS**: Holding a piece of paper at the lens surface, adjust offsets as necessary until the image is centered within the lens perimeter. A full white field works best for this.

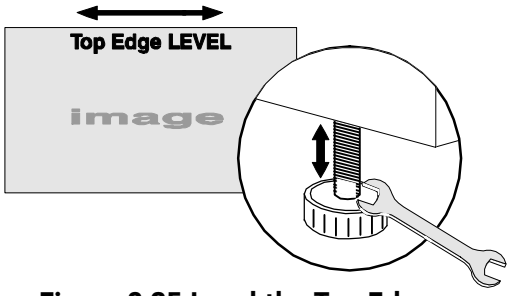

Figure 2-35 Level the Top Edge

4. **RE-CHECK SIDE-TO-SIDE LEVELING:** With a good test pattern on screen, double-check projector leveling (refer to **Figure 2-4**) so that the ***top edge*** of the image is parallel to the top edge of the screen. Refer to **Figure 2-35**.

2.8 Offset and Boresight Alignment

To ensure proper offset for your site and consistently good focus in all areas of the screen, a primary lens must be installed and its lens mount precisely adjusted in relation to internal optics as described below. If desired, an auxiliary lens can then be added to widen images for scope cinema displays. **Warning! 1)** *If the Motorized Auxiliary Lens Mount (MALM) is present, ensure to move the MALM to the OUT position before performing any lens calibrate or reset functions on the Motorized Primary Lens Mount to prevent collision between the projection lens and the MALM.* **2)** *Hazardous moving parts. Keep fingers and other body parts away.* **NOTES: 1)** *Projector must be fully assembled and powered up in its final location.* **2)** *Keep clear of rotating parts. Remotely operated motors may start to spin without warning.* **3)** *Avoid long hair, jewelry, and loose clothing exposure to the knobs during manual adjustment.* **4)** *In case of emergency, unplug the line cord to immediately halt movement of the lens mount.*

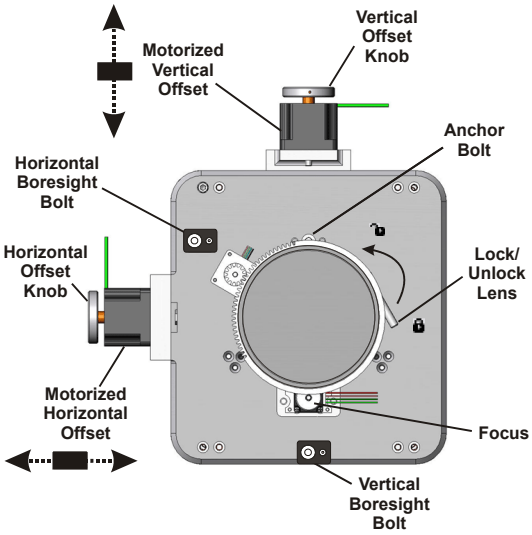

Figure 2-36 Anatomy of the Lens Mount

2.8.1 Adjust Offset

Project an image with the ***primary lens only***. Always adjust offset before boresight. **Important!** *Ensure the correct lens is selected in the **Advanced: Lens** menu before calibration to ensure you will remain within the applicable boundary of the installed lens.* **NOTE:** *When adjusting the Focus, Offset, and Zoom, you may experience a slight delay in the response rate of the lens upon selecting the buttons.*

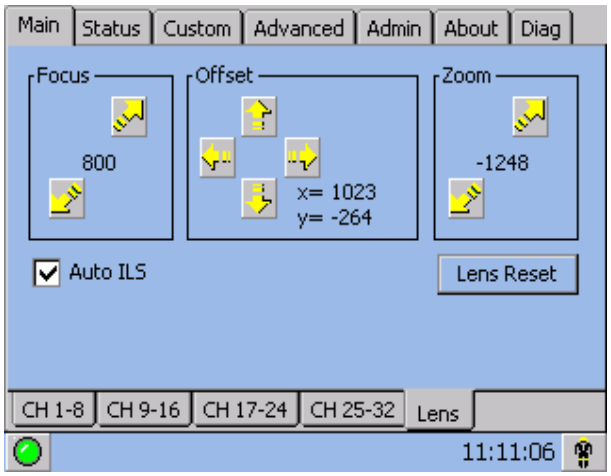

Figure 2-37 Intelligent Lens System

1. Ensure **Auto ILS** is selected from the **Main: Lens** menu. **NOTE**: *Enabling **Auto ILS** will over-write the pre-defined settings for this channel. To perform a temporary lens adjustment, uncheck **Auto ILS** and adjust the lens by clicking the necessary buttons or manually adjusting the focus, offset, and/or zoom knobs. All temporary adjustments will be lost when **Auto ILS** is selected again or if the channel changes.*
2. Using an framing test pattern (Framing.tga is recommended), adjust the **Offset** by clicking the up/down/ left/right buttons on the **Main: Lens** menu (**Figure 2-37**) as necessary to display a square image on the screen. **NOTES: 1)** *You can also hold the buttons down for continuous movement.* **2)** *For best optical performance, make sure to minimize keystone error by using offset more than aiming to center the image in off axis installations.* **3)** *For best results, avoid extreme tilts or offsets. Corner vignettes on a white test pattern indicates extreme offset that should be avoided using mechanical alignment.*

The maximum vertical offset is shown in **Figure 2-38** (bottom illustration). **NOTES: 1)** *Horizontal offset is just a few dozen pixels, resulting in a maximum of 52% of the image displayed on one side or the other of the lens.* **2)** *Maximum offsets are slightly less when offsetting in both directions (H and V) at once.*

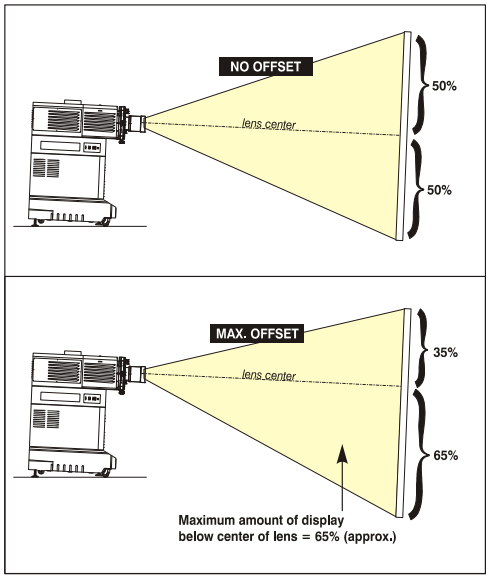

Figure 2-38 Vertical Offset Range

2.8.2 Adjust Left/Right Boresight

The goal for left/right boresight alignment is to adjust the lens mount until both sides of the image focus on the screen simultaneously. Projectors are aligned properly at the factory, but due to mechanical tolerances in the alignment between the projector and the screen, the left and right sides of the image come into focus at different times. By focusing on the left side of the screen, we need to determine if the right side of the image focuses in front or behind the screen relative to the left side. **NOTE**: *Use a test pattern with a single pixel vertical and horizontal line and perimeter frame such as DC2K Framing or RGB Alignment.*

1. The Horizontal Hold Screw acts as counter-resistance to hold the lens mount in place once set. Before adjusting the boresight, loosen the **Horizontal Hold Screw**. See **Figure 2-39**.
2. Extend the lens focus completely.

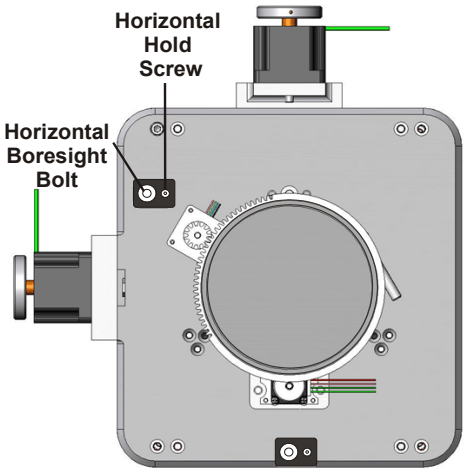

Figure 2-39 Horizontal Boresight

3. Adjust the **Focus** to retract the lens using the down arrow on the **Main: Lens** menu. See **Figure 2-40**. Watch the image at the left edge of the screen until it comes into focus. If the image appears well-focused on the left edge but not on the right, determine if the right side focuses in front of or behind the screen. If the entire screen come into focus, skip to step 7.

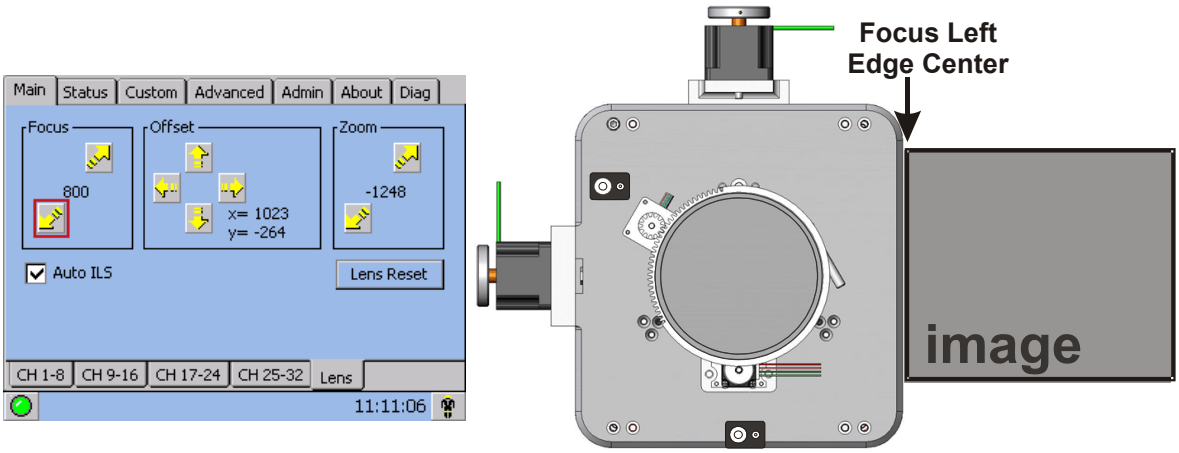

Figure 2-40 Adjust Focus

4. Continue retracting the lens.
   a. If the right side of the image comes into focus before the lens is completely retracted, then the image focuses in front of the screen. See **Figure 2-41.** To correct this problem, adjust the **Horizontal Boresight** bolt to direct or aim the lens mount towards the LEFT to balance out the left/right edges. See **Figure 2-39**.
   b. If the right side of the image fails to come into focus then the image focuses behind the screen. To correct this problem, direct the lens mount towards the RIGHT by adjusting the **Horizontal Boresight** accordingly.

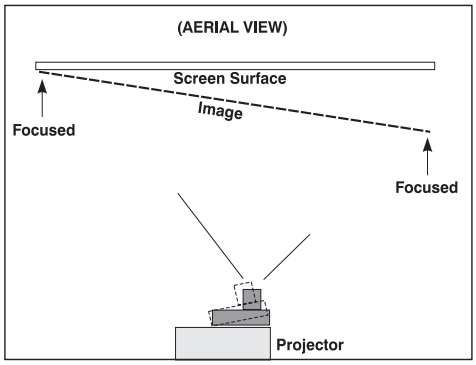

Figure 2-41 Aerial View Illustrating Misaligned Boresight

5. When both sides appear equally blurry, adjust the **Offset** by clicking the up/down/left/right buttons on the **Main: Lens** menu to re-center the image on the screen.
6. Repeat Steps 1 - 5 until both sides of the image are well focused.
7. Adjust the **Horizontal Hold Screw** to lock adjustments in place. Check boresight again. See **Figure 2-39**.

2.8.3 Adjust Top/Bottom Boresight

When the horizontal boresight is complete, focus the image at the top edge of the screen.

1. Loosen the **Vertical Hold Screw**. See **Figure 2-42**.
2. Extend the lens focus completely.
3. Adjust the **Focus** to retract the lens using the down arrow on the **Main: Lens** menu. Watch the image at the top edge of the screen until it comes into focus. If the image appears well-focused on the top edge but not on the bottom, adjust the Vertical Boresight. If the entire screen come into focus, skip to step 8.
4. Continue retracting the lens.
   a. If the bottom edge of the image comes into focus before the lens is completely retracted, then the image focuses in front of the screen. To correct this problem, adjust the **Vertical Boresight** bolt to direct or aim the lens mount UP towards the top of the screen to balance the top/bottom edges.
   b. If the top edge of the image fails to come into focus then the image focuses behind the screen. To correct this problem, direct the lens mount DOWN by adjusting the **Vertical Boresight** accordingly.
5. When both sides appear equally blurry, adjust the **Offset** by clicking the up/down/left/right buttons on the **Main: Lens** menu to re-center the image on the screen.
6. Repeat Steps 2 - 5 until the top and bottom of the screen are both well-focused.
7. **Refocus:** Although all sides of the image should now be in focus, the center of the image may be slightly blurry at this point. Re-focus the center of the image. The goal is for good focus at the center and on all sides.
8. Adjust the **Vertical Hold Screw** to lock the lens mount in place. Check boresight again. See **Figure 2-42**.

For more information on ILS and channel setups, refer to *Section Custom: Lens Menu, on page 3-26*.

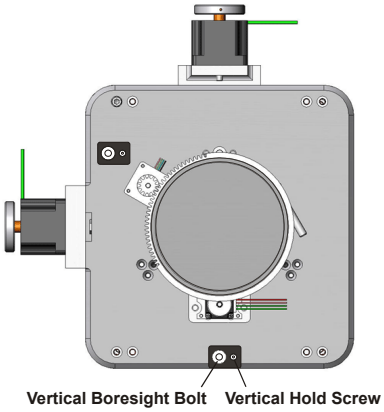

Figure 2-42 Vertical Boresight

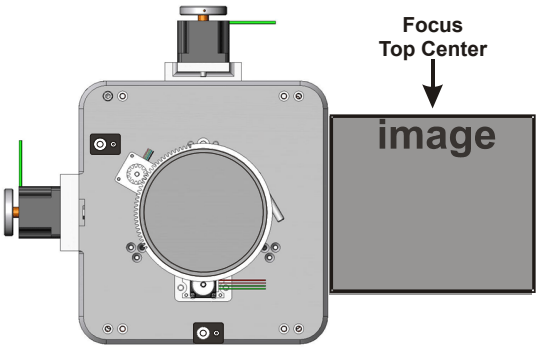

Figure 2-43 Adjust Vertical Boresight

2.8.4 Copy the Channel Settings To Another Channel

Once the basic image alignment for a channel is complete, you can copy this setting between channels.

- From the **Custom: Lens** menu, use the drop-down menu to select a particular channel and click **Copy** for the changes to affect the selected channel. Repeat for every channel that requires the same ILS values.

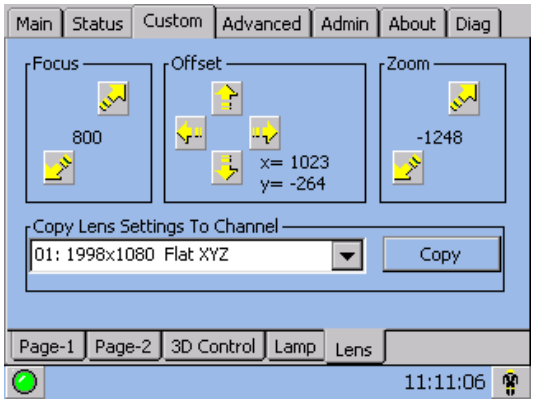

Figure 2-44 Copy Channel Settings

2.8.5 Add Auxiliary Lens

If present, swing the auxiliary lens in position in front of the primary lens. It should magnify in the horizontal direction only, stretching the image straight across the screen—this requires that its aperture (visible within the lens) be *vertically* aligned with the screen. If the image appears skewed, loosen the locking ring on the auxiliary lens and rotate the lens as necessary until the wide image is horizontal. Refer to the Motorized Auxiliary Lens Mount Instruction Sheet (020-100036-04) for details on mounting the anamorphic and wide converter lenses.

Anamorphic (1.25x)

1. **FOCUS PRIMARY LENS:** With the auxiliary lens in place, re-focus the primary lens using focus knob. The goal is good focus at center and on all sides.
2. **FOCUS ANAMORPHIC LENS:** If horizontal focus in the image needs improvement, focus the auxiliary lens too—rotate its barrel as needed.
3. **RECORD SERIAL NUMBER:** Enter the serial number of your anamorphic lens in **Advanced: Lens** menu. Refer to **Figure 3-20 Advanced: Lens Menu Options, on page 3-31**.

Wide Converter Lens (1.26x)

NOTE: *Use a gauge block (or measuring device) to establish basic alignment of the wide converter lens to the primary lens.*

⚠ WARNING Use the Wide Converter lens with the following High Brightness or High Contrast Zoom lenses only: 1.45-1.8:1, 1.8-2.4:1, 2.2-3.0:1 or 3.0-4.3:1.

1. **FOCUS PRIMARY LENS:** With the auxiliary lens in place, re-focus the primary lens using focus knob. The goal is good focus at center and on all sides.
2. **LENS CLEARANCE:** Adjust clearance between the primary and wide converter lens to match the values in the following table. **NOTE**: *Measure from front of prime lens to back of wide converter lens barrel.*

Zoom Lens	Clearance
1.45 - 1.8:1	8.6 mm ± 2
1.8 - 2.4:1	13.6 mm ± 2
2.2 - 3.0:1	6 mm ± 2
3.0 - 4.3:1	6 mm ± 2

3. **VERTICAL LENS POSITION:** Adjust the converter lens vertically so that it is exactly on the center line with the pre-adjusted prime lens.
4. **HORIZONTAL LENS POSITION:** Adjust the converter lens horizontally so that it is exactly on the center line with the pre-adjusted prime lens.
5. **PITCH ADJUSTMENT:** Adjust the top and bottom clearance between the wide converter and prime lenses until they are equal, using a wedge gauge or small calipers.
6. **YAW ADJUSTMENT:** Adjust the two side clearances between the wide converter and prime lenses until they are equal, using a wedge gauge or small calipers.
7. **RECORD SERIAL NUMBER:** Enter the serial number of your converter lens in **Advanced: Lens** menu. Refer to **Figure 3-20 Advanced: Lens Menu Options, on page 3-31**.

2.9 Fold Mirror and Convergence Adjustments

In rare instances, shipping and handling may affect the precise factory alignments of one or more optical components—as a final step of installation, the installer may have to adjust the fold mirror and/or convergence of the DMDs as described here.

Fold Mirror Adjustment

If a corner or edge of the image is missing, this may indicate that the fold mirror has become misaligned with the rest of the optical system, resulting in cropping of data. Correct as described below:

Remove the fold mirror access plate from the underside of the projection head—this plate is located just below the lens. Two access holes will be revealed, through which you can adjust two fold mirror screws:

- ***To raise or lower the image*** - adjust the screw closest to the operator's side.
- ***To move the image left or right*** - adjust the screw furthest from the operator's side.

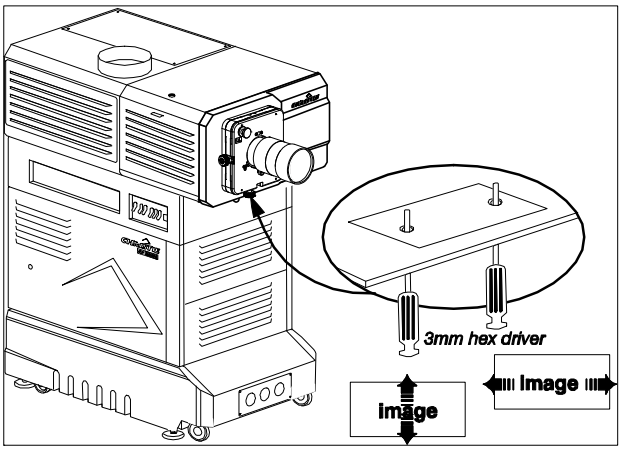

Figure 2-45 Fold Mirror Adjustment

DMD Convergence

A convergence problem is evident when one or more projected colors (red/green/blue) appears misaligned when examined with a proper convergence test pattern—where normally the 3 colors should overlap precisely to form pure white lines throughout the image, one or more poorly converged individual colors may appear adjacent to some or all of the lines. Qualified service technicians can correct as described on the color label provided inside the projection head.

2.9.1 Calibrating the System Using DCP Librarian Setup Software

NOTE: *DCP Librarian described here is licensed software intended for Christie installers only. Many of its functions are now available at the TPC.*

DCP Librarian is a comprehensive Windows™-based software application used for calibrating image color performance and defining electronic screen masking required in your particular installation, and for creating individual *Projector Configuration Files* (PCFs) and specific source files necessary for proper display of incoming material. DCP Librarian also defines the system/network configuration for communication links to the projector, transmitting information to and from the *CP2000* via an Ethernet or RS-232 connection. Chief functions, many of which can be done at the TPC, are introduced below.

Color Calibration

After the *CP2000-SB* is installed and all components are mechanically aligned for optimized light output and geometry at the screen, its electronic system processing must be *calibrated* to ensure accurate color display in the new environment. In this one-time global calibration, the installer measures initial colors at the screen and enters this data—called *Measured Color Gamut Data*—into Windows™-based *DCP Librarian* software installed on a laptop. The software then calculates precise corrections needed for regaining the desired color performance—called *Target Color Gamut Data*—and essentially compensates for the type of port window (if present), screen, lens, light output, ambient light and other current environmental factors that affect color performance. Results are defined in a file, activated, and downloaded to projector memory to be used as a basis for all future displays.

If there are changes to the environment in the future (for example, a new screen is installed), the *CP2000* should be re-calibrated. Also note that correction for proper color balance sometimes reduces overall light output. **NOTE:** *Most gamut functions are also now available in the TPC* **Gamut** *menu (password required). Multiple MCGD files can be saved for use in different situations, such as when an auxiliary lens is swapped on and off the projector.*

Electronic Screen Masking

DCP Librarian also provides a powerful masking tool for precision cropping of the image to correct for geometry problems such as a keystoned image. The effect is similar to aperture plate filing typically done for correcting images from film projectors. As in the calibration of color, screen masking adjustments are global—that is, you can create a variety masks and download them to projector memory for use with sources as desired. Mask settings are distinct from aspect ratio or screen position settings. **NOTE:** *Most screen functions are also now available in the TPC* **Screen** *menu (password required).*

PCFs (Rare)

Numerous settings collected into a single *Projector Configuration File* further control processing variables for optimized display of specific source material. Each PCF file, typically created in DCP Librarian, pre-defines color space, target color gamut, source aspect ratio (resolution), and gamma (a.k.a. degamma) settings for a cinema or non-cinema source. Once the collected settings are downloaded to the projector's internal memory, their PCF can be assigned to the corresponding *CP2000* input connection and quickly applied via a controller such as Christie's *Touch Panel Controller*. No further adjustment in processing should be required.

Refer to the DCP Librarian User's Manual for all *DCP Librarian Setup Software* operating details and procedures.

3 Operation

This section describes how to use the controls and switches for basic operation of the projector once it is properly installed by a qualified service technician. **NOTE:** *The illustrations provided are to enhance the understanding of the written material and may not represent your exact projector model.*

- *3.1 Projector Basics*
- *3.2 Power-up Procedure*
- *3.3 Power-down Procedure*
- *3.4 Introduction to the Touch Panel Controller*
- *3.5 Using the Touch Panel Controller (TPC)*
- *3.6 Remote Control of the Touch Panel Controller*
- *3.7 Upgrading SSM Firmware*
- *3.8 Working with the Lamp*
- *3.9 Working with the Lens*
- *3.10 Working with 3D*
- *3.11 Working with Servers and Diagnostics*

3.1 Projector Basics

3.1.1 Components and Features

The main ***CP2000-SB*** components appear in **Figure 3-1** and are briefly described below in alphabetical order.

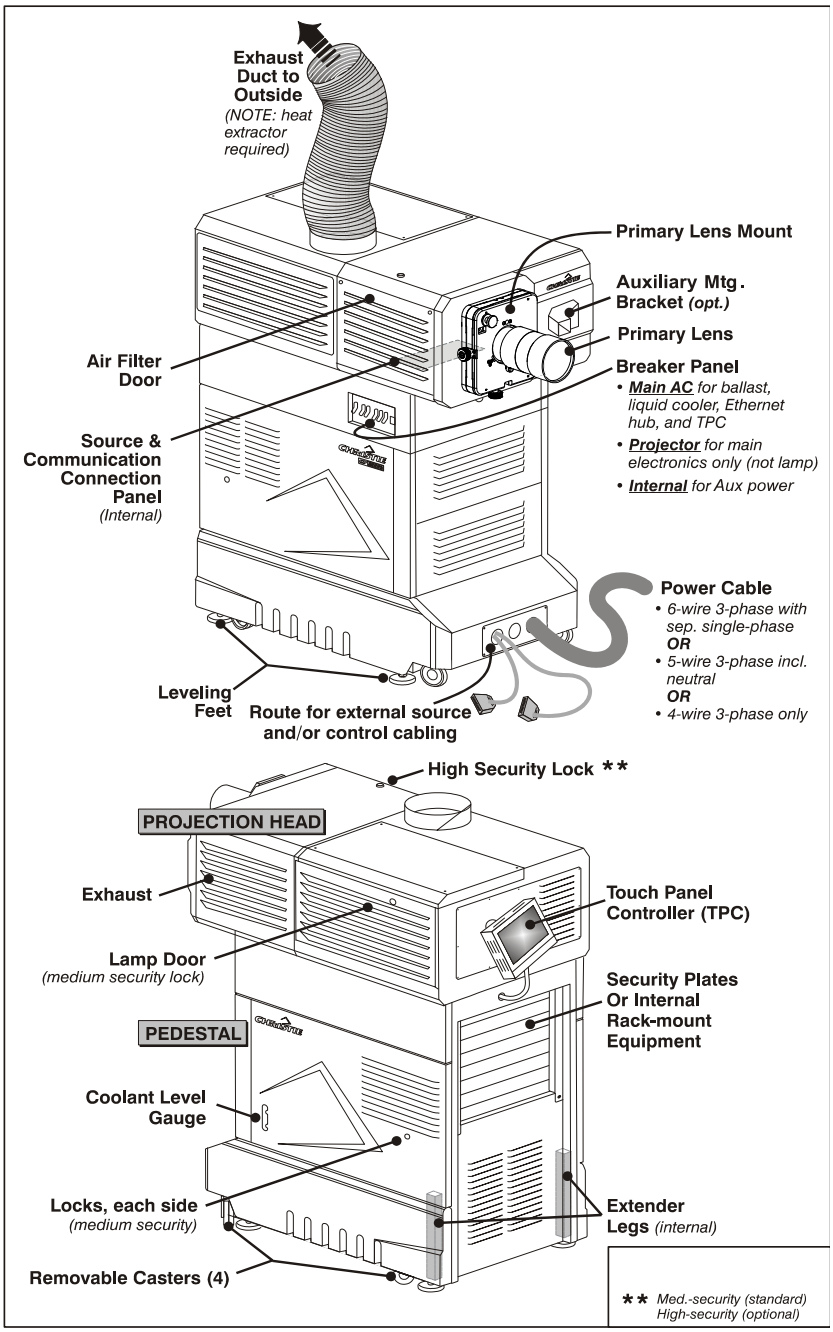

Figure 3-1 Basic Projector and Related Components

Air Filter

Intake air flows through the filter before circulating in the front compartment to cool the main electronics. Replace the air filter whenever the lamp is replaced—or sooner in dusty/dirty environments. ***Check condition monthly.*** Refer to *Section 6.4 Replacing the Lamp & Filter* for complete instructions.

Breaker Panel

Each circuit breaker on the pedestal serves two purposes: 1) it is a power switch for one or more components, and 2) it protects against over-current conditions. All breakers must be ON for normal ***CP2000-SB*** power-up and operation, enabling AC to reach the CP components**.** If faulty or excessive AC is detected, a breaker will trip to OFF in order to prevent damage to the relevant component. Try moving the breaker ON again—if the breaker continues to trip OFF, the AC problem must be resolved. Breakers are:

- **MAIN AC (3-phase):** Turns the CP lamp ballast, liquid cooling system, Ethernet hub and TPC ON/OFF. The 3 switches move in tandem.
- **PROJECTOR:** Turns the CP projection head (electronics only—***not*** the lamp) ON/OFF.
- **INTERNAL (single-phase):** Turns on/off any extra equipment, such as an extractor fan mounted within the exhaust duct, that has been plugged into a power bar connected to CP's terminal block TB2. *Functional only with 5-wire or 6-wire AC supplies.* **NOTE:** *Called "AUX" on* ***CP2000-SB*** *models for connection of Cine-IPMs.*

NOTE: *Breakers do not ignite the lamp. You must use the TPC Lamp Button.*

Casters

The 4 large casters are typically used only when the CP is rolled into place for installation, or if the projector is moved from one location to another. When the projector leveling feet (recommended for all installations) are extended enough to raise the projector, the casters will spin freely and can be removed if desired.

Communications and Source Connection Panel

The *Communication and Source Connection Panel* (located internal, underside of projection head) provides high-security connection of the ***CP2000-SB*** to a variety of external equipment such as sources and controllers:

- **ETHERNET:** Connect networked equipment such as PCs and servers to the internal Ethernet hub.
- **RS-232 A (PC):** Connect a standard serial/RS-232 cable for external serial communication with a PC/laptop **NOTE:** *Does not support ASCII messaging*.
- **RS-232 B (RESERVED):** Unique protocol for Christie accessories only, such as the *Cine-IPM 2K*. Other equipment will ***not*** function via this port.
- **PORTS A AND B (CINEMA):** Connect a wide variety of high-definition cinema sources to these SMPTE 292M bit-serial standard interface BNCs.
- **DVI PORTS (ALTERNATIVE NON-CINEMA CONTENT):** Connect a wide variety of non-cinema video and graphics sources to either of these identical single-link DVI ports. **NOTE:** *These are single-link ports for single-link cable/connectors only. Using this pair of ports as a dual-link pair requires a special adapter (not currently available).*

Changing a connection requires access to the interior of the projector via the locked pedestal. Unauthorized general users cannot connect/disconnect.

Coolant Level Gauge

This gauge indicates the current level of coolant present for circulating to the main electronics in the front portion of the projection head. Keep the liquid level close to—but not above—the top notch. Refill if the level drops near to the bottom notch. Refer to *Section 6.2.3 Liquid Cooler*.

Exhaust Duct

Connect the projector's 8" top exhaust hole to an outside-vented duct, with at least 10" of the last portion of the duct *rigid* at the projector. The duct will also need a heat extractor providing the 600 or 450 CFM airflow required for all lamps. Refer to *Section 2.1.2 Exhaust Ducting*.

Extender Legs

The rear feet of the projector are attached to extendable legs for more radical tilt (up to 12°) than possible with the feet only. For best optical performance, tilt the projector so that it is parallel to the screen—but always avoid radical tilt (such as when the projector is much higher than the screen) and rely on lens offset instead. Refer to *Section 2.4 Adjusting Tilt and Leveling* for complete instructions on setting the tilt adjuster.

Lamps

In the ***CP2000-SB,*** use a **2, 3, 4.5 or 6** kilowatt lamp:

The lamp door must remain closed and locked for all normal operation. Trained operators (only) can access the lamp via security key. Complete lamp specifications are provided in *Section 8.6 Lamps*.

Lens Mount & Auxiliary Lens Mount

The standard lens mount secures and seals a primary zoom lens within the projector and provides manual adjustment of focus, zoom and offset. Adjacent to the primary mount, an optional *Motorized Auxiliary Lens Mount* (MALM) may be added, providing smooth and fast positioning of a 1.25x anamorphic lens or 1.26x wide converter in front of the primary lens. Such lenses horizontally spread a pre-squeezed image back into its wider 2.39:1 "scope" image, and is most typically used in side-masked theatres.

Leveling Feet

For most cinema installations, the projector is inclined slightly forward to match screen tilt and to minimize the amount of vertical offset required. Turn the adjustable feet to increase or decrease projector height as needed for proper leveling and/or slight tilt. Refer to *Section 2.4 Adjusting Tilt and Leveling*.

Pedestal

The multi-purpose pedestal provides **1)** housing for numerous harnesses and the main power supply (a.k.a. lamp ballast), **2)** a stable and adjustable base for the projection head, **3)** a central location for accessing all connections, and **4)** connection of AC. The pedestal is closed and locked (medium security) for normal operation.

Power Cabling

NOTE: *Not included with projector.*

In most cinema installations, the AC power cord emerging from the pedestal toe is hard-wired to an appropriately rated breaker connected to the AC supply in your building. Note that all CP models require 3-phase power, but can be configured in one of 5 different ways depending on the AC available at your site. Six-wire sites include single-phase AC also. The power cable provides AC to the entire ***CP2000-SB*** system, and is disconnected only by turning off ***all*** breakers at the wall.

Projection Head

The projection head houses the critical illumination and optical components as well as the *DLP™ Cinema* processing technology responsible for combining light and incoming source signals into brilliant high-resolution digital displays. Source inputs route through the pedestal toe (or their servers are rack-mounted at the rear of the pedestal), and are connected during installation to the *Source and Communication Connection Panel* located on the underside of the projection head. Projector function is controlled via the *Touch Panel Controller* or other communication from a controller. The projection head must be closed and locked for all operation.

Security Locks

STANDARD SECURITY for PEDESTAL: Standard-security locks on the lamp door and on each pedestal door help limit access to authorized personnel. Identical duplicate keys for these three locks are provided with each projector.

TAMPER-RESISTANT HIGH-SECURITY for PROJECTION HEAD: Components in the projection head are protected by an electronically monitored high-security lock on the lid. This interlock strictly controls access, since every opening of the lid is 1) electronically logged and reported and 2) will immediately disable the current *CineLink®2* cinema presentation. The unlocked state is reported via a TPC alarm window, serial communication and SNMP (note the latter requires the "TPC-60" model of the *Touch Panel Controller*, new in 2006). You must lock the lid in order to remove the key and activate the switch for normal operation. The two identical keys provided at manufacture are unique to your projection head serial number as identified on the back of the Christie key fob and cannot be duplicated. If you lose or damage a key, contact your dealer or Christie for a new security lock and key set—the keys cannot be replaced individually. **NOTE:** *It is recommended that all keys to the projector be kept in a locked cabinet at the site.*

Other CP panels are not removable with standard tools, or they can be removed only where there are other obstacles in place that prevent theft or tampering.

Security Plates

The rear security plates help prevent unauthorized access to the interior of the pedestal. They remain in place until equipment (such as servers or PCs) is rack-mounted within the pedestal.

After rack-mounting your equipment, ensure to re-install the pair of vertical rack protector posts at the rear. They will overlap the sides of your new equipment and help prevent 1) access to the pedestal interior and 2) theft of rack-mounted equipment. **NOTE:** *Keep on hand any extra security plates removed for rack-mounted equipment—these covers must be re-installed if the equipment is removed from the projector in the future. Do not operate the CP with "open" slots at the rear.*

Source/Control Cabling

The pedestal toe knock-outs provide safe routing for all external cabling that connects to the underside of the projector head during installation. Use a route not currently occupied by the main AC power cable.

Touch Panel Controller (TPC)

The *Touch Panel Controller (TPC)* is a portable touch-sensitive screen used to control the projector. At the TPC, general users can turn the lamp ON/OFF, select a specific source/input as defined in one of 32 *display setups* created by the installer, and obtain basic status information. Depending on the installation, the TPC module may be mounted to the rear of the projector with its cable routed to the projector via a rear hole, or it may be mounted elsewhere at the site and routed to the projector via a front hole. Tilt/turn the TPC as desired for best viewing angle. Navigation and complete description of the *TPC* menus—including password-protected options for advanced users or service technicians—is fully explained in *Section 3.5 Using the Touch Panel Controller (TPC)*.

3.2 Power-up Procedure

NOTE: *This is a manual power-up procedure. Some cinema installations may include an automation system that controls lamp ignition in conjunction with other theatre variables such as house lights, audio, and the start of the feature from a digital media storage device/server.*

⚠ WARNING Do not attempt operation if the AC supply and pedestal are not within the specified voltage range.

1. Ensure that the breakers at the main wall panel for the CP are switched ON.
2. At the operator's side of the pedestal, set all ***CP2000-SB*** circuit breakers to ON-these are main AC (3-phase), the projection head (2-phase), and terminal block (single-phase). The MAIN AC light will be green if AC is present, components such as fans and power supplies will start up, and the TPC will begin initializing.
3. When the TPC has initialized (approx. 15-30 seconds, indicated by a green circle in the left corner), press the lamp button on the TPC **Main** menu to ignite the lamp.

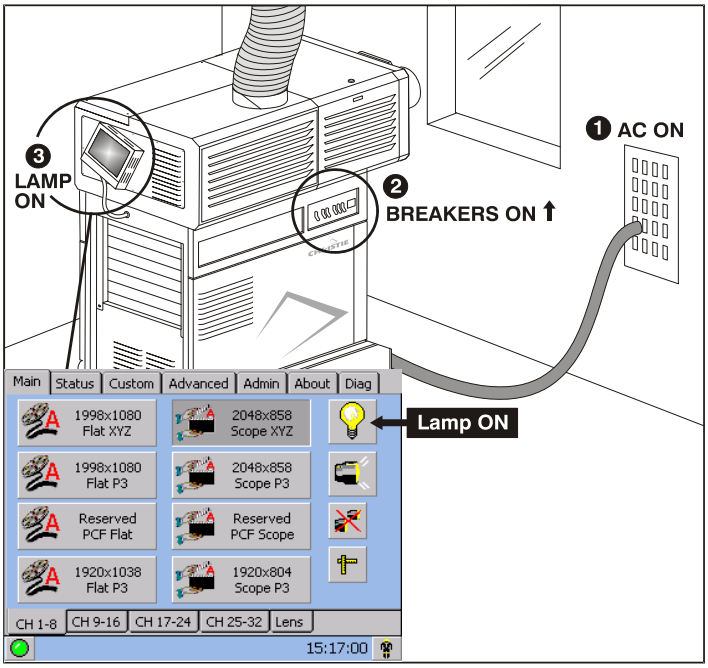

Figure 3-2 Power-up Procedure

IF THE LAMP DOES NOT IGNITE:

- If a safety interlock switch is open (such as when the lamp door is ajar), the lamp cannot be struck-the TPC lamp button will be disabled until the interlock problem is resolved. An alarm window will also appear on the TPC.
- If the lamp fails to ignite even though the interlock system is OK, the projector will automatically re-try ignition using 100% of the maximum power acceptable for the installed lamp. If this re-try also fails, a new lamp is likely needed. **NOTE:** *For complete power-up troubleshooting, refer to* *Section 7 Troubleshooting*.

3.3 Power-down Procedure

1. At the TPC, press the lamp button (on Main menu) to turn the lamp OFF. You must hold the button down briefly.
2. Wait at least 10 minutes so that fans continue to cool the lamp. **Warning!** *Be sure to wait for the cooling fans!*
3. At the operator's side of the pedestal, set all breakers to OFF. **NOTE:** *Manual shut-down only. Optional automation not yet available from Christie.*

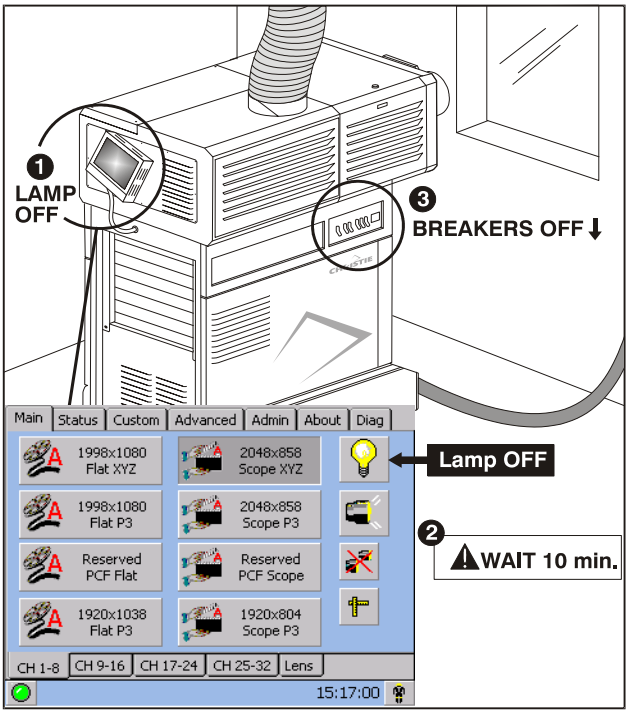

Figure 3-3 Power-down Procedure

3.4 Introduction to the Touch Panel Controller

Most users will use the Touch Panel Controller (TPC) as their main interface with the projector. Depending on the installation, this Windows™-based touch-sensitive screen is typically mounted on the rear of the projector or at some other convenient nearby location. Installers must pre-program it appropriately for use at the specific site.

3.4.1 User Access and Rights

Whether or not you can access specific TPC menus and functions depends on how you have logged on to the TPC. See **Figure 3-4**.

General Users

For the general user having no username or password, the *Touch Panel Controller* (TPC) offers three menus providing:

- ON/OFF toggling of the lamp, shutter, auxiliary lens position, user test patterns, and pre-configured displays.
- Basic status and/or diagnostic information about projector components.
- Versions of software components currently installed.

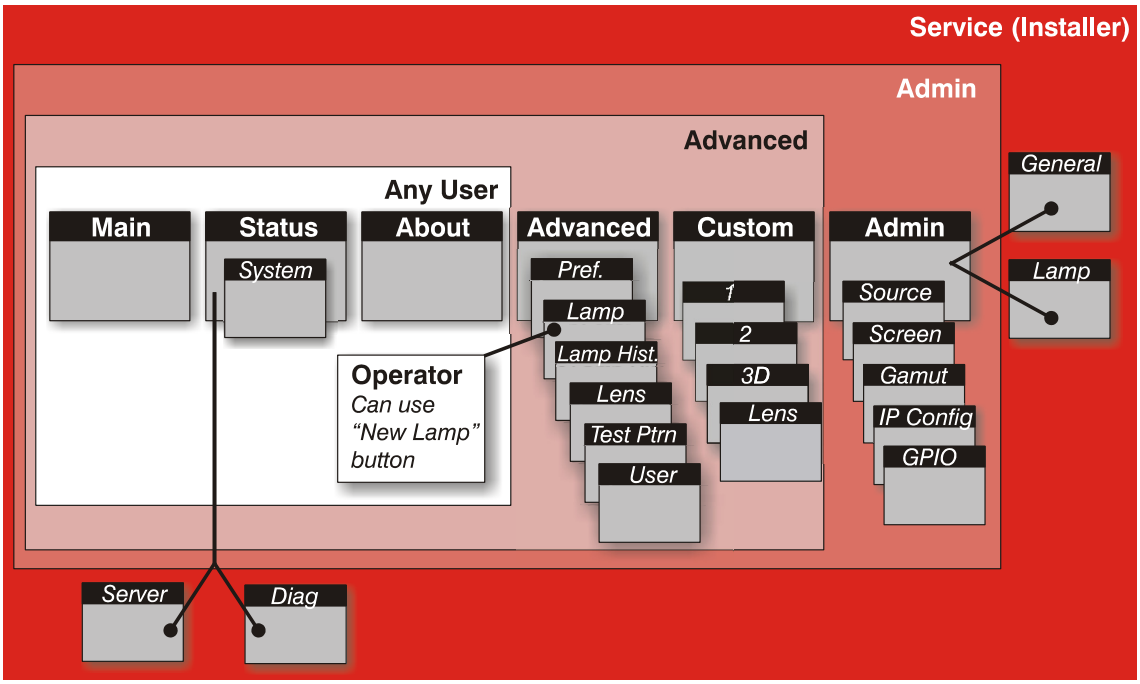

Figure 3-4 TPC User Access Rights

A simple design with familiar menu icons enables a novice user to display an accurate and fully optimized image by pressing a single button on the touch-screen-and precisely configured presentations are protected from accidental or unauthorized change.

Trained Operators, Advanced Users, Administrators and Installer

In addition to the basic user rights shown in the **Any User** above, the TPC offers four distinct password-protected levels of use (shown in shaded areas in **Figure 3-4**). Each has all of the rights of lower levels, plus additional rights as described below:

- ***Trained Operators*** can access the New Lamp function required when replacing the lamp.
- ***Advanced users*** can access two additional menus (**Custom** and **Advanced**) where they can define all display setups and set the DVI processing path, configure 3D displays, optimize light output, record lamp changes, activate test patterns and set certain system preferences.
- ***Administrators*** can also use five **Admin** submenus-**Source**, **Screen**, **Gamut**, **IP Config**, and **GPIO**-to define setup files as selectable choices for processing a variety of incoming signals. **Source** files set incoming resolution, offset (rare) and desired final aspect ratio, **Screen** files determine image cropping (masking), size of display area, and type of lens, and color **Gamut** information ensures color display standards are properly met in the current environment. In the **IP Config** menu, the administrator can define new Ethernet settings (IP network addresses) for the projection head and TPC. In the **GPIO** menu, the administrator can select pre-defined GPI or GPO macros.
- ***Installers and other Service Personnel*** can access two additional configuration menus (**General**, and **Lamp**) as well as three more **Status** submenus (**Server**, **Diag** and **Interrogator**). The installer can define system operating parameters such as which projector is controlled by the TPC, and critical lamp parameters such as installed lamp type, fan speed and light level at the screen. Installers can also establish temperature scale preference, remote access rights, test pattern access rights, extent of data logging. An installer can see ID and error information for servers, as well as a detailed diagnostics log for in-depth troubleshooting.

3.4.2 TPC Power-up Defaults

When the ***CP2000-SB*** powers up (refer to *Section 3.2 Power-up Procedure*), the *Touch Panel Controller* will begin the steps of **`Initializing`**..., **`Attempting to log on`**..., and **`Updating status`**, displaying its progress on the TPC status bar at the bottom of the screen. When initializing is complete, all files are refreshed on the TPC and the system is in a ready-to-use default operating mode:

- The **Main** menu appears on the *Touch Panel Controller*, where you can press the lamp button to turn on the lamp.
- The most recently used display button is depressed (darkened). Upon turning on the lamp, the image will appear.

3.4.3 Failed TPC Connection

If the TPC fails to initialize and instead displays a communication error such as **`No connection`** or **`Cannot locate Ethernet port`** or **`Waiting to Connect`**, there is likely a bad connection or address between the TPC and the rest of the projector. Check that TPC cabling is intact, and try again. Review *Section 7 Troubleshooting* and, if the problem persists, contact your network administrator.

3.5 Using the Touch Panel Controller (TPC)

Touch Panel Controller software resembles other Windows™-based applications, but is activated by touching the TPC screen itself.

Touch large raised rectangular buttons to activate a function such as turning the lamp or shutter ON or OFF, or to start a presentation, or select a different icon. Buttons may include text and/or an icon.

- To log ON/OFF as a different user, touch the user icon in the bottom right corner.
- To go to a new menu, touch its tab at the top of the page.
- To go to a submenu, touch its tab located above the status bar.
- To see more options in pull-down menus, touch .
- To select an option in a list, touch the option text.
- To begin entering text such as serial numbers, touch the entry box.
- To escape without change from a pull-down list, touch menu background.
- Leaving a menu automatically saves its current settings.
- Touch checkboxes to toggle on or off.
- Touch to jump to the **Status** menu at any time.

All *TPC* menus and functions are illustrated and explained below.

NOTES: **1)** *Shown are SAMPLE menus only-your specific text and/or icons may vary according to settings recorded in the password-protected menus. By default, the* **Main** *menu offers 32 pre-configured channels.* **2)** *If necessary, adjust TPC screen brightness and contrast via the* **Windows CE Display Settings** *for this device (service password required). If your TPC is enclosed in a blue casing, use the small knob on the back of the unit to adjust screen settings.*

3.5.1 TPC Main Menu

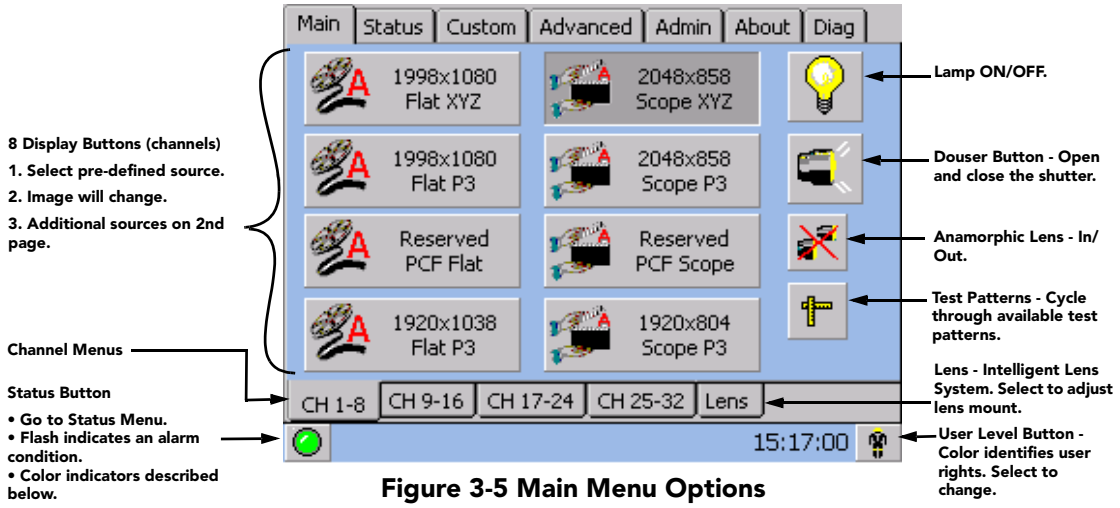

Figure 3-5 Main Menu Options

NOTE: *The Status and User buttons in the bottom corners do not affect the projected display image.*

TURN THE LAMP ON or OFF: To toggle the lamp ON/OFF, press and hold the lamp button.

LOG ON: By default, with no login, the TPC will offer only the three general user menus intended for daily operation. If you need to access additional functions offered in other menus, you must log on as a specific user with more rights. Press the user level icon in the bottom right corner of any screen then enter the desired user name and password in the text boxes provided.

OPEN OR CLOSE THE DOUSER (SHUTTER): To blank the display for instant picture muting and cooler stand-by mode, press the **raised** douser (shutter) key showing a lens that is currently projecting light. Closing the douser slides a shutter blade in front of the lens and reduces lamp power to 50% of its maximum rating. To open the douser and restore previous lamp power, press the **depressed** douser key showing a darkened lens with red warning circle.

MOVE THE AUXILIARY LENS: Toggle the current location of the optional auxiliary lens: position it either in front of the primary lens to stretch the display horizontally, or move it aside. **NOTE:** *For complete operating instructions, refer to the information supplied with the Motorized Auxiliary Lens Mount.*

SEE TEST PATTERNS: To display a test pattern, press the Test Pattern button-repeat to cycle through available test patterns. To return to a presentation, toggle the Test Pattern button again or select one of the 8 display buttons from a Main menu page. **NOTES: 1)** *Allow 2-3 seconds for each test pattern to appear.* **2)** *The number and type of available test patterns depends on what the installer loaded during installation.* **3)** *Any user beyond the General User can also choose from the complete range of test patterns offered in the password-protected* **Advanced** *menu.*

START FEATURES or PRESENTATIONS: To start a different feature or presentation, press its corresponding display button.

STATUS BUTTON: Color indicators,

Green = All OK

Yellow = Environment/Diagnostics WARNING

Red = Environment/Diagnostics CRITICAL ERROR

Flashing = ALARM CONDITION

3.5.2 TPC Status Menu

NOTE: *The* **Status: System** *menu described here is available to all users. For information about the password-protected* **Status: Server**, **Status: Diag** *and* **Status: Interrogator** *menus, refer to* *Section 3.11 Working with Servers and Diagnostics*.

Navigate the **Status** menu as you would Windows *Explorer* or *File Manager*, expanding or compressing directories as desired by pressing the corresponding small square buttons. To see more of the **Status** menu, drag the scroll bar up or down. This menu updates approximately every 30 seconds. A sample view of the **Status: System** menu is shown in **Figure 3-6**.

INFORMATION INDICATORS: As shown in **Figure 3-6**, this blue symbol identifies basic informative data describing the source connection, as well as certain non-critical historical/operational facts about the projector and lamp. Such data does not trigger warnings or error conditions.

ENVIRONMENT / DIAGNOSTIC INDICATORS: The small colored indicators or virtual LEDs for environmental and diagnostic information are green during normal operation. These indicators can change to indicate a warning (yellow) or critical error (red) status.

- ***Yellow = Warning***

  Indicates an unusual environmental condition. For example, a temperature may be elevated and nearing its upper limit-correct the problem by checking all cooling systems, turning OFF the projector and cooling if necessary (make sure to follow the standard shut-down procedure). Service may be required in some cases.

- ***Red = Error***

  Indicates that 1) the environment has a serious problem or 2) a specific electrical component is not detected or does not appear to be functioning properly. In some cases, a module may need re-seating. In other cases, service or replacement of a module may be required before the projector can resume normal operation. Regardless, a red indicator requires immediate attention.

- ***Diagnostics***

  Showing a question mark icon (**?**) indicates an unknown status caused by a problem during initialization. Try re-booting the projector.

Note that if any of the small indicators are yellow or red, the main warning icon on the status bar changes accordingly so that problems are also immediately detectable from other TPC menus. In addition, a full-screen flashing red alarm window is triggered on the TPC for such problems as failed interlocks (mandatory), over-temperature (optional), and fan problems (optional).

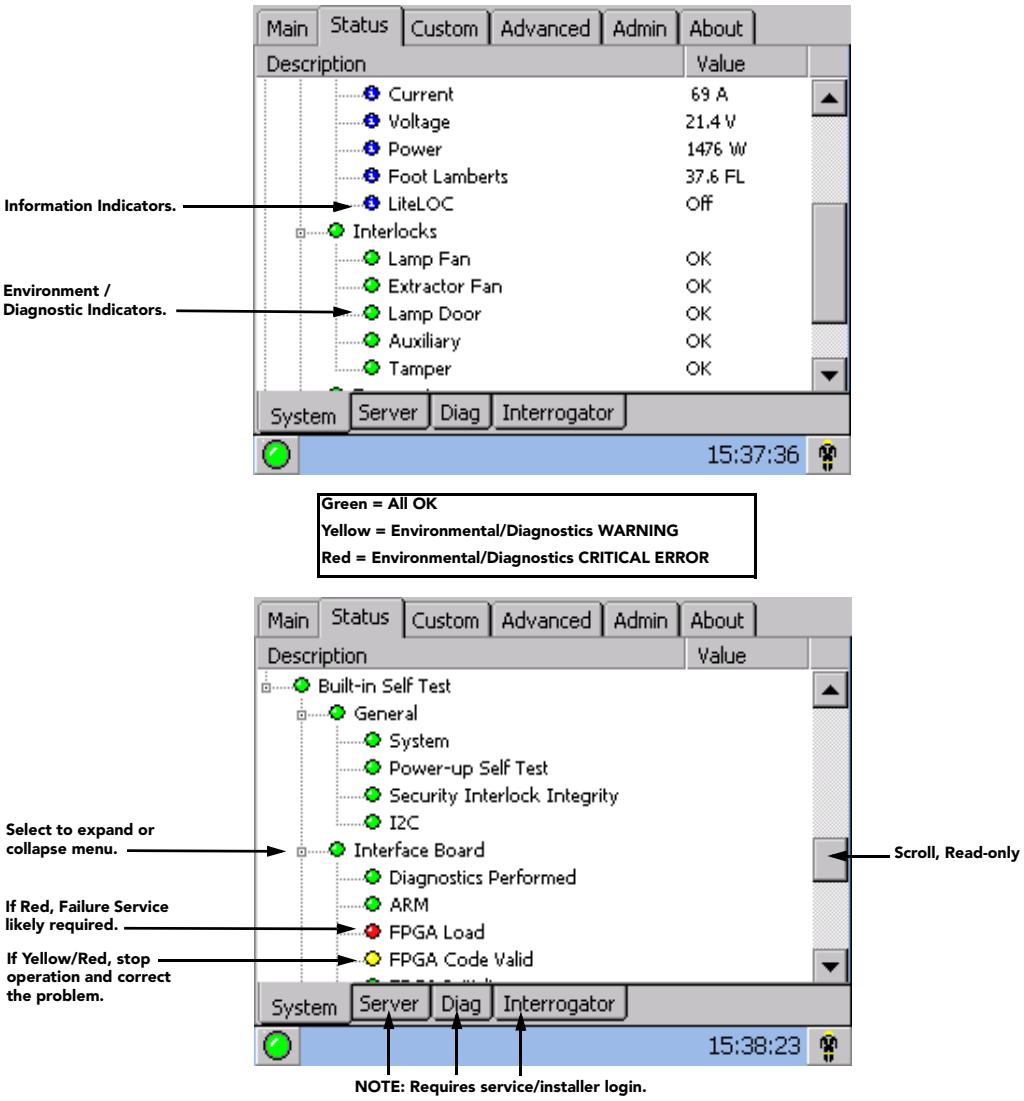

Figure 3-6 Status: System Menu

Table 3.1 Summary of Status: System Menu

STATUS: SYSTEM MENU ENTRIES	
SOURCE	
Projector Input	Source connection (location) of current signal
Signal	Vert. Freq.
CINE-IPM (NOT APPLICABLE FOR CP2000 PROJECTORS)	
Power	ON/OFF
Input and Channel	Source connection (location) and channel #
Signal	Hor. and Vert. Freq. of current source
Standby	ON/OFF (**NOTE**: *lamp remains on regardless*)
OSD	ON/OFF screen display of Cine-IPM menus

ENVIRONMENT	
Projector Hours	# hours projector has been powered up and communicating with the TPC
Total Lamp Hours	# hours logged for all lamps ever installed
Lamp	# hours logged on current lamp
Current	Lamp current (# amps)
Voltage	Lamp voltage (# volts)
Power	Lamp power (# watts)
Footlamberts	Footlamberts (interpolated from min/max calibration)
LiteLOC™	On/Off/At Maximum Power
Interlocks	Critical safety and/or operation monitoring
Lamp Fan† (rear of projector)	OK/Failure. Failure also triggers an alarm window
Extractor Fan† (for ducting to outside world)	OK/Failure. Failure also triggers an alarm window
Lamp Door† (louvered lamp door)	OK/Failure. Failure also triggers an alarm window
Auxiliary	OK/Failure. Failure also triggers an alarm window
Tamper† (projector lid)	OK/Failure. Failure triggers an alarm window and stops CineLink®2 - encrypted cinema processing.
Temperatures (°C or °F) *	Critical internal temperatures in °C or °F
Card Cage	55-69°C=warning ≥70°C=critical
DMD – Blue	60-64°C=warning ≥65°C=critical
DMD – Red	60-64°C=warning ≥65°C=critical
Integrator	95-104°C=warning ≥105°C=critical
Prism	70-74°C=warning ≥75°C=critical
SSM	55-59°C=warning ≥60°C=critical
Fan *	Speed (RPMs) of 4 internal cooling fans
Fan #1 (“Intake #1”)	RPMs of 1st primary fan (exhaust side of proj.)
Fan #2 (“Intake #2”)	RPMs of 2nd primary fan (exhaust side of proj.)
Card cage	RPMs of electronics card cage fan
LAD	RPMs of laminar airflow device for DMDs
SECURITY ENCLOSURE NOTE: *If any of the following indicators are “red”, service is needed.*	
Security Enclosure Installed	
Security Enclosure Armed	
Security Tamper	
Component Side Lid Open	
Non-Component Side Lid Open	
Enclosure Communication Failure	
Security Enclosure Battery Low	

BUILT-IN SELF-TEST **NOTE**: *If any of the following indicators are "red", service may be needed.*	
General	
System	
Power-up Self Test	
Security Lock Integrity	
I^2C	
Interface Board	
Diagnostics Performed	
ARM	
FPGA Load	
FPGA Code Valid	
FPGA Initialize	
FPGA No-Load Jumper	
FPGA Done	
FPGA Register Read/Write	
UART 0	
UART 1	
I^2C	
Ethernet	
Synchronous Serial Port	
File System	
GPI Macro	
A/D Macro	
Formatter Board (a.k.a. Formatter Interface Board)	
Processor Board	
Diagnostics Performed	
DSP	
FPGA Load	
FPGA Code Valid	
FPGA Initialize	
FPGA McBSP XRDY	
FPGA Done	
FPGA Register Read/Write	
Serial ID Chip	
CLUT SRAM	
Overlay Framestore SDRAM	
Resizer FIR Chip	
Resizer FIFO	

Other	
System Supervisor Module	Detected/Not Detected
Self Test	OK/Failed
Ballast Communications	OK/Failed

**Can also be set to trigger a full-screen flashing red alarm window on the TPC. Note that if a DMD temperature exceeds a certain factory-set threshold for at least 2 seconds, the lamp will automatically shut down. Recovery requires that the DMD temperature fall to a safe factory-set threshold.*

†Safety interlock.

3.5.3 TPC Alarm Window

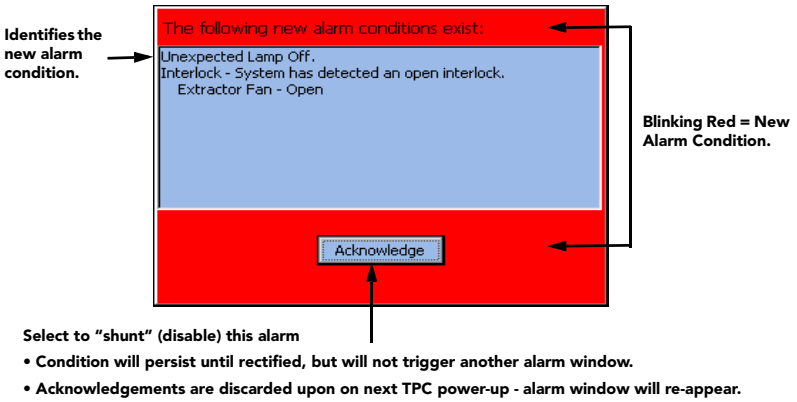

Figure 3-7 Flashing Alarm Window

In addition to the status bar at the bottom of any TPC screen, a full-screen red alarm window flashes if one of the alarm conditions shown in the left column of **Table 3.2** is encountered. If a safety interlock fails, power will no longer reach the lamp (DC output is stopped), and the lamp button on the TPC **Main** menu will be disabled. **NOTES**: **1)** *A failed safety interlock automatically prevents power from going to the lamp and disables the lamp button on the TPC Main menu. Since most interlock alarm conditions are triggered by switches, regularly check the operation of these switch levers.* **2)** *With interlock integrity restored, the lamp button on the TPC Main menu is automatically re-enabled.*

Can Alarm Conditions Be Ignored?

Note every alarm window indicates a ***new*** condition. In a given session, the alarm window will not reappear for a condition that you have acknowledged (shunted) but not yet solved. However, if you cycle the projector OFF and ON again, any persisting alarm condition will trigger the alarm window again. Although it is highly recommended that the monitored over-temperature and fan speed conditions always be set to trigger a flashing alarm window (default), this trigger can be turned off if desired by clearing the appropriate **Alarm Triggers** checkbox in the **Advanced** menu. Once cleared, such conditions will only trigger the yellow or red Status warning button rather than a flashing alarm window. This can be helpful in rare cases where the alarm window is erroneously/repeatedly triggered with no detectable error condition. Disabling alarm triggers is ***not*** recommended for normal operation. Failed interlocks, an SSM communication fault, I^2C fault, and lamp failures always produce an alarm window-i.e., these alarm triggers cannot be disabled or hidden.

Responding to an Alarm Window

Press the acknowledge button in order to hide the alarm window and access other TPC menus, and try to solve the problem as shown in the right column of **Table 3.2**.

Table 3.2 Alarm Conditions and Solutions

FAILED INTERLOCK	
Lamp door is open	Make sure the lamp door is securely shut.
Failed lamp fan	Check for interference at vane switch. Ensure the 220V connection near Panel C at the rear of the projector head (on the underside) is still plugged in. Replace fan.
Failed heat extractor (for external duct at the top of the projector)	May not be turned on. 600 CFM required. Replacement heat extractor may be required.
Failed auxiliary interlock (usually for fire alarms or automation systems)	Check auxiliary switch wiring in pedestal. Check the external controlling device.
Failed high-security lock (cinema use disabled)	Lock the projector lid. If still failed, double-check the high-security lock itself, plus all related harnessing.
OVER-TEMPERATURE	
Card cage is too hot	Power down and cool projector. Ambient temperature may be too high. Check air filter and fan.
Prism is too hot	Power down and cool projector. Reduce lamp power. Ambient temperature may be too high. Check air filter and sensor. Check liquid cooler fan.
Integrator is too hot	Power down and cool projector. Reduce lamp power. Ambient temperature may be too high. Check air filter and sensor. Check liquid cooler fan.
Red DMD is too hot	Power down and cool projector. Reduce lamp power. Ambient temperature may be too high. Check fluid flow and level. Check air filter. Check liquid cooler fan.
Blue DMD is too hot	Power down and cool projector. Reduce lamp power. Ambient temperature may be too high. Check fluid flow and level. Check air filter. Check liquid cooler fan.
SSM is too hot	Power down and cool projector. Reduce lamp power. Ambient temperature may be too high. Check fluid flow and level. Check air filter.
Ballast is too hot and has shut down	Cool, then cycle the projector down-and-up normally. If the over-temp recurs, there is a cooling problem in the ballast that may require service. Check ballast fan.
OTHER FANS TOO SLOW	
A primary fan is too slow or stopped	Replacement fan may be required.
Card cage fan is too slow or stopped	Replacement fan may be required.
Laminar airflow is too slow or stopped	Replacement LAD filter or fan may be required.
LAMP PROBLEMS	
Lamp Life has expired	Replacement of the lamp is recommended.
Unexpected lamp OFF	Increase Lamp Power. Check that DMDs have not overheated. An interlock may have momentarily tripped. Lamp may have to be replaced.
Lamp strike failed	If interlocks are OK, ensure the 220V connection near Panel C at the rear of the projector head (on the underside) is still plugged in. If lamp re-try still fails, replace the lamp.

OTHER	
SSM Communication Error	Check cabling. Cycle projector power for a normal start-up. Check LEDs on card cage boards, which can indicate a light engine problem instead. Check LVPS/Processor voltages. Also, if shutter or lamp are functioning normally, SSM likely OK.
I^2C Communication Error	There may be a power problem with the main electronics (I^2C). Check LVPS/Proc. voltage adjustments.
LENS MOUNT	
A communications error with the ILS motor control board has occurred. Please ensure that all cabling is correctly connected.	Check cabling. Cycle projector power for a normal start-up.
ILS Motor Control Board - Sensor Failure	This error will only be detected on a lens reset or lens calibrate. Check the sensors. It is cleared by cycling the projector power or performing a lens reset.
ILS Motor Control Board - In Boot/Program Mode	If this message remains for longer than 4 seconds, try re-powering the TPC or upgrading the MCB software.
ILS Motor Control Board - Main Code CRC	Upgrade MCB software.

3.5.4 TPC Custom Menu

NOTE: *Password-protected; Requires Advanced, Admin, or Installer rights.*

The TPC's five **Custom** menus enable installers (service), administrators or advanced users to tailor projector processing as they wish for any type of incoming source, including 3D material, and collect these settings into a unique channel that any user can select at the Main menu. Up to 32 channels can be defined.

SAVING OR DELETING: Changes in the **Custom** menu are saved when you leave the menu. Or, to delete one or more channels, use the trash bin **Delete** button-note a caution dialog box will appear first.

Custom: Page-1 and Page-2

These two menus consist of numerous display settings that can be adjusted as desired, then defined collectively as a custom setup or channel. Each defined channel then appears as a button on the **Main** menu where any user can select it, providing a reliable way to quickly and correctly change the on-screen display to suit the source content. Alternatively, if a pre-defined *Projector Configuration File (PCF)* has been supplied with distributed content (rare) and the **Use PCF** checkbox checked, those **Custom** options which are already defined in the PCF (Source, Target Color, Color Space, Gamma and LUT-CLUT) disappear from the **Custom** menus and are protected from further modification. The channel defined in such a case will thus be based on 1) the display settings in the supplied PCF and 2) the remaining **Custom** parameters that are not contained in a PCF: the physical location of the input connection (such as a cinema port or DVI port), the screen format, data format, and processing path.

Custom: Page-1 Menu

As shown in **Figure 3-8** and **Figure 3-9**, clearing or checking the **Use PCF** checkbox determines which **Custom** settings are available for use.

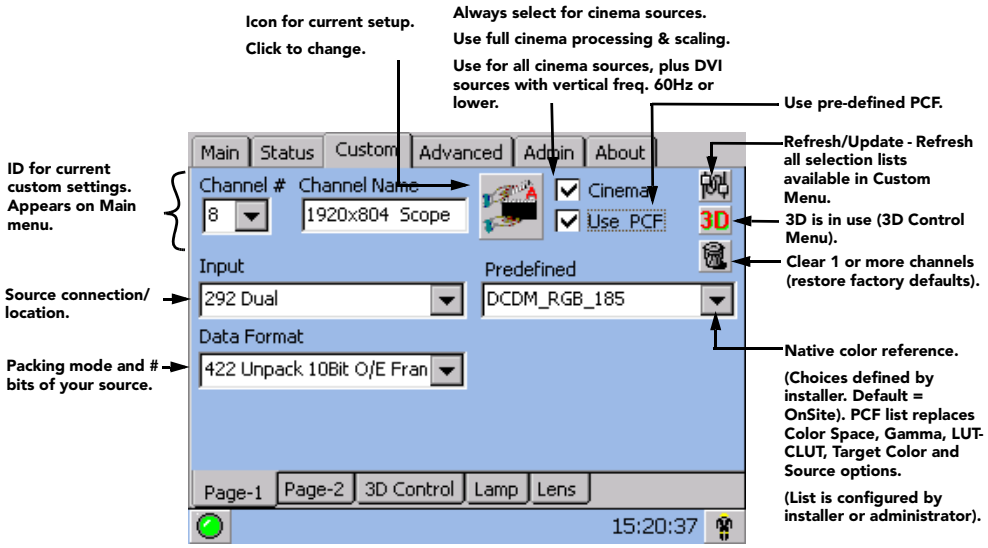

Figure 3-8 Custom: Page 1 Menu - Using Pre-defined Configurations

USE A PCF OR NOT? The availability of functions in the **Custom** menu depends on whether you choose to utilize pre-defined configuration files (PCFs) already downloaded to projector memory (**Figure 3-8**), or whether you prefer to implement your own settings from within the **Custom** menu. Although pre-defined PCFs were originally intended as part of content from the distributor so that the intended image quality is not compromised, this practice is rare. Instead, PCFs may be created using *DCP Librarian* and downloaded to the projector. Most applications such as cinema, post production and alternative or non-cinema displays require that one or more display parameters be individually adjusted-clear the **Use PCF** checkbox.

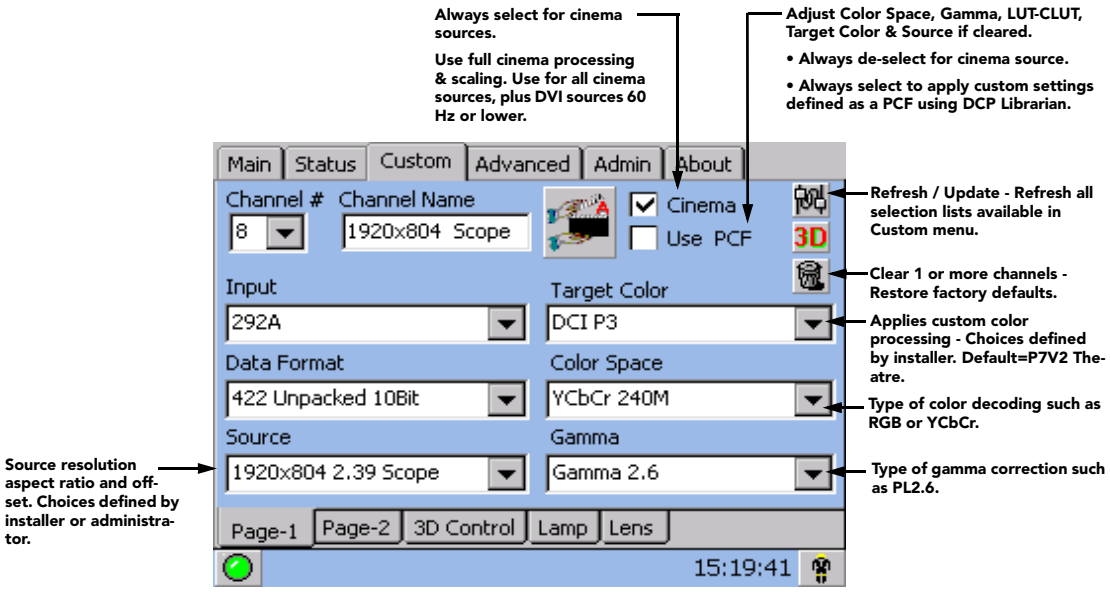

Figure 3-9 Custom: Page 1 Menu - Creating Customer PCFs and Other Settings

USE CINEMA PROCESSING OR NOT? The cinema checkbox on the **Custom Page-1** menu determines if the incoming signal is processed using the projector's full cinema path, which enables image scaling and color correction but restricts resolution-and-frequency combinations. If unchecked, most of the projector's Processor Board functionality is by-passed-this disables scaling and color correction, but is compatible with higher resolution-and-frequency combinations. Generally, use non-cinema processing with DVI sources having high resolution-and-frequency combinations. See examples in **Table 3.3**.

Table 3.3 Processing Path for DVI Sources (Examples)

RESOLUTION	VERT. FREQ.	TYPE OF PROCESSING
1920 x 1080	≤ 48 Hz	☑ Cinema = *use full cinema processing*
2048 x 1080	≤ 48 Hz	☑ Cinema = *use full cinema processing*
1920 x 1080	49-77 Hz	☐ Cinema = *use non-cinema processing*
2048 x 1080	49-72 Hz	☐ Cinema = *use non-cinema processing*

NOTE: *See Table 5.1 Compatible Non-Cinema DVI Sources (All Digital RGB 8-bit), on page 5-2 for a more complete list.*

Important! *Attempting to use cinema processing when the incoming DVI vertical frequency is too high can cause a TPC start-up error. Turn cinema option OFF, then cycle power OFF/ON.*

Table 3.4 Summary of Custom: Page-1 Menu Options

CUSTOM: PAGE-1 MENU OPTIONS	
Channel #	Identifies/sets button# 1-32 for current **Custom** menu settings. To assign a new channel # for the current Custom settings, select the desired # (display will also change) and press **SAVE**. Buttons representing channels appear in order on the **Main** menu.
Channel Name	Current name or title for a button identifying a source, such as a movie title or DVD. Select to rename using pop-up keyboard. Up to 32 names can appear on the TPC **Main** menu (4 pages of 8).
Large Icon (button)	Shows icon defined for current source. Click to assign a different icon.
Cinema	Keep checked for most sources (default), ensuring that incoming data is processed using the complete cinema path and scaled to fill the screen where possible. Currently *cinema* sources (A/B projector inputs) should always utilize the cinema path and scaling. Uncheck only for incoming DVI having a frame rate >60 Hz (if SXGA) or >48 Hz (if 2048 x 1080), as the cinema pixel clock rate is limited to 110 MHz.
Use PCF	Enter a check to use a pre-defined PCF for this source and prohibit further Custom adjustments (the PCF components of **Source**, **Color Space, Gamma, LUT-CLUT** and **Target Color** will disappear), then select the desired PCF from the Predefined Configurations list. Clear the checkbox if you wish to adjust the **Custom** settings-this is currently recommended for all cinema use.
Refresh Button	Updates all Custom settings (such as **Gamma**, **Target Color**, etc.) to include any data newly added to projector memory via *DCP Librarian* setup software or TPC **Admin** menus.
3D Button	If present, the current channel is for a 3D display (set in **3D Control** menu).
Reset Button	Clear the current (or all) channel settings and return to factory defaults.
Input	Identifies/sets the location/connection of the current source, such as cinema ports A or B, or a DVI graphics port. Note that use of the twin and dual link DVI options requires special hardware. Refer to *Section* 5 Non-Cinema Operation.
Data Format	Specifies the source type (8-10-12-bit) and whether or not it is packed. The projector will process the incoming signal according to the data format selected here. Note that available data formats depend on which projector input is selected, and will reset to a default value if an input has not yet been selected. Use of DVI-dual requires a separate adapter at the DVI connectors, and use of DVI-twin requires a special source. Data format settings are *not* included in a PCF.

CUSTOM: PAGE-1 MENU OPTIONS	
*** Source**	Identifies/sets the expected incoming source resolution and aspect ratio such as **1920 x1080** or **Mk7 default**. Choices are pre-defined using *DCP Librarian* or the TPC *Admin* menu.
*** Target Color**	Identifies/sets the special color processing called **Target Color Gamut Data** established for a given presentation. Default=P7V2 Theatre.
*** Color Space**	Identifies/sets the method of color decoding for the current source. Default = RGB for all DVI sourceso Default = YCbCr for all cinema sources (i.e., SMPTE A or B ports)
*** Gamma**	Identifies/sets the desired gamma (a.k.a. de-gamma) correction needed for proper tonal range of the source material-for example, a grayscale test pattern will be neutral and smoothly graduated. In theatres, the only gamma setting currently needed is PL2.6.

** These components are part of any pre-defined PCF (Projector Configuration File) that controls image processing for a given source. When the **Use PCF** checkbox is checked, these components disappear from the **Custom** menu and are protected from further change.*

Custom: Page-2 Menu

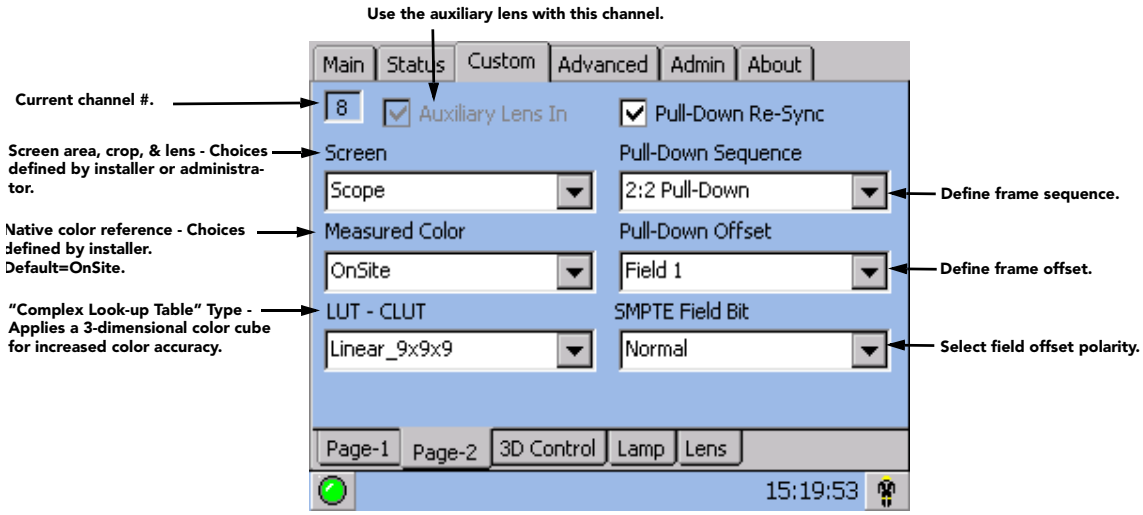

Figure 3-10 Custom: Page-2 Menu Options

Table 3.5 Summary of Custom: Page-2 Menu Options

CUSTOM: PAGE-2 MENU OPTIONS	
Auxiliary Lens In	Sets whether or not the optional auxiliary lens is used with this channel.
Pull-Down Re-Sync	This command is used to enable or disable the re-synchronization function associated with the Pull-Down Sequence. It is sometimes useful to disable the re-synchronization function when the time code is not running at the proper rate, such as when a jog control is being used with a tape machine.
Screen	Identifies/sets display area, masking (cropping), and expected lens for the current source. Choices are pre-defined using *DCP Librarian* or the TPC Admin menus. Screen settings are not included in a PCF.
Measured Color	For a given channel/source, select the desired MCGD file (representing native uncorrected colors) to use as a reference for calculating target color processing. Default = OnSite. See also **Admin: Gamut** menu.
*** LUT-CLUT**	Complex Look-up Table. No information available.
Pull-Down Sequence	Identifies/sets the frame sequence to achieve a target frequency or time relationship with another signal.
Pull-Down Offset	Identifies/sets the frame offset.
SMPTE Field Bit	Identifies/sets field offset polarity.

Custom: 3D Control Menu

This menu provides numerous controls for adjusting and synchronizing incoming 3D signals (always dual L/R HD-SDI signals at the SMPTE A and B ports) with each other and with external 3D equipment such as screens, emitters and glasses. The **Custom: 3D Control** menu options are summarized in **Figure 3-11** and **Table 3.6**. Add a check in the **Enable** checkbox in order to 1) enable 3D display and adjustment parameters 2) automatically configure the Input and Data Format (on the **Custom Page-1** menu). For full 3D application notes, including a step-by-step tutorial for use, refer to *Section 3.10 Working with 3D*.

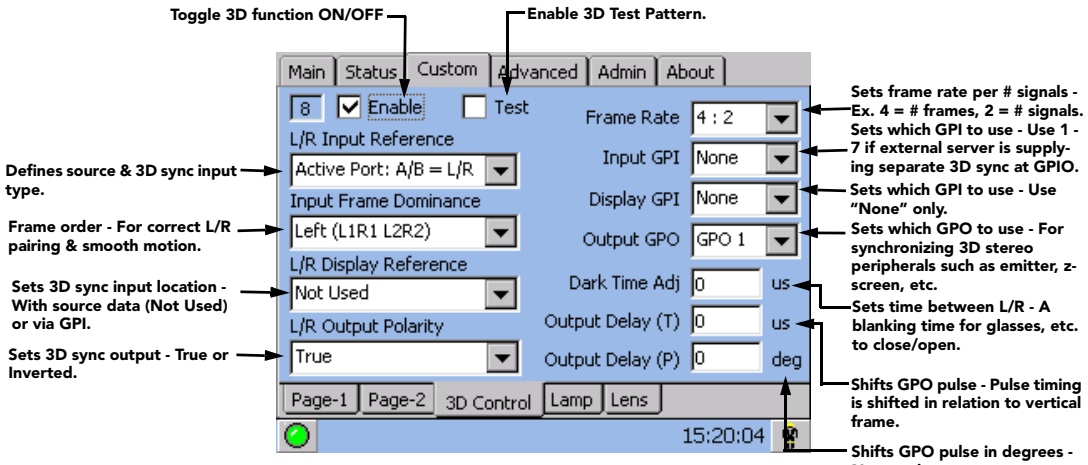

Figure 3-11 Custom: 3D Control Menu Options

Table 3.6 Summary of Custom: 3D Control Menu Options

CUSTOM: 3D CONTROL MENU OPTIONS	
Enable	Activate 3D controls and auto-set *Input* to *292 Dual Input* and *Data Format* to *Unpacked 4:2:2* in the **Custom Page-1** menu.
Test	For confirming proper Sync Output setting (i.e., which GPO is connected to your 3D peripherals such as emitters, glasses, etc.)
L/R Input Reference	Defines how 3D stereo sync input is supplied (currently ports A and B only). See *L/R Input Reference Notes* below.
Input Frame Dominance	Defines frame order (L-R or R-L) required for 3D perspective. Correct setting ensures smooth motions, and depends entirely on the original source mastering.
L/R Display Reference	Always **Not Used** unless a separate 3D stereo sync input is at GPIO connector. See *L/R Display Reference Notes* below.
L/R Output Polarity	Keeps 3D stereo sync output the same as input (true) or reversed (inverted). See *L/R Output Polarity Notes* below.
Frame Rate	Ratio of *total # frames displayed* to *# frames forming complete data*. Increase to reduce flicker in displays < 96 Hz. Max. recommended setting for 2048 x 1080 displays = 5:2. Can be higher in smaller displays, or decreased if incoming signal is already high enough to prevent flicker. See *Frame Rate Notes* below.
Input GPI	Select **None** when 3D stereo sync input is part of source signal at ports A and B. Use GPI 1-7 only if sync input is supplied to GPIO port.
Display GPI	Always **None** unless 3D stereo sync input is at GPIO connector.
Output GPO	Define your GPO sync output for 3D device (glasses or z-screen polarization), using to 1-7 depending on wiring.
Dark Time Adj	Create a blank time interval between L/R frames to allow for glasses ON/OFF. Helps synchronize the output to the viewing.
Output Delay (Time)	Offset (in µ) 3D stereo sync output in relation to dark time interval. Positive offset = delay, negative offset = start early. See *Output Delay Notes* below.

L/R INPUT REFERENCE NOTES:

Select the option matching your source type, and how the 3D sync is supplied:

- **A=LEFT, B=RIGHT:** Select if your 3D source provides separate left and right data via 2 cables at the **A** and **B** SMPTE ports. This assumes the 3D stereo sync signal is included with the image data inputs rather than supplied separately at the GPIO port.
- **WHITE LINE or BLUE LINE:** Select only if using a single 3D input signal in which an embedded white or blue line at the bottom of each frame identifies left vs. right, and an additional separate 3D stereo sync input at the GPIO port is not present. Short line=Left, long line=Right. **NOTE:** *Requires single 3D input. Not currently supported.*
- **ASSIGNED GPI:** Select only if using a single 3D signal requiring a separate 3D stereo sync input at the GPIO. **NOTE:** *Requires single 3D input. Not currently supported.*

L/R DISPLAY REFERENCE NOTES:

Select the option matching your *L/R Input Reference*, above.

- If your 3D source provides separate left and right data via 2 cables at the **A** and **B** SMPTE ports, simply select the desired frame order (either L-R or R-L).
- If your single 3D source provides a separate sync connected at the GPIO, or if the single 3D source includes an embedded 3D sync signal code, the Input Frame Dominance choice should match that of the *L/R Input Reference* (default) or, if necessary, be inverted. **NOTE:** *Requires single input; not currently supported.*

L/R OUTPUT POLARITY NOTES:

- **TRUE:** 3D L/R sync output (from GPO) will match L/R sync input.
- **INVERTED:** 3D L/R sync output (from GPO) will be the opposite of sync input (left becomes right, and right become left).

FRAME RATE N:M NOTES:

EXAMPLE

$$4{:}2 = \frac{\textbf{4 frames displayed}}{\textbf{2 frames per image}}$$

Increase the display frame rate as necessary to reduce flicker from your source(s). These N:M ratios define *how many frames to display per number of frames that form 1 complete image*. For all 3D use, the bottom value is *2*, indicating that two frames-left and right-are combined into every complete display frame. For non-3D, it is *1* frame. Set to the highest rate possible without image cropping.

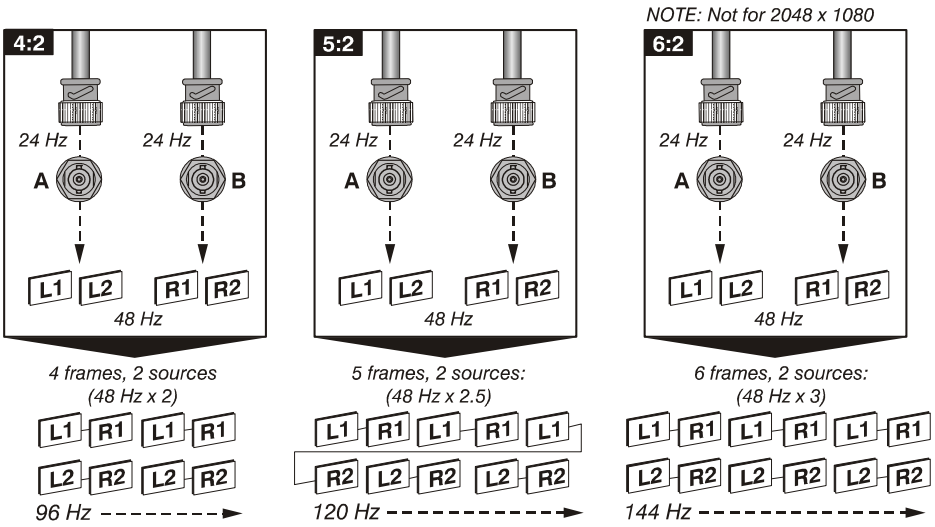

Figure 3-12 Examples of Frame Rate N:M

For example, when processing typical dual (L/R) 3D signals of 24Hz, a **Frame Rate N:M** setting of 4:2 will generate 4 frames of output for every 2 frames of input at a final frame rate of 96 Hz. For any source, keep the final frame rate less than that of the projector (which is 67 Hz for full 2048 x 1080 resolution). Generally, incoming 24Hz signals can be increased by a maximum factor of **5:2**.

DARK TIME and OUTPUT DELAY NOTES:

The dark time between incoming L/R frames provides a brief interval of non-image time-in microseconds (µs)-for your switching device (such as shutters in glasses) to complete its switch. Ideally, when this interval is properly set and exactly suits the speed of your device, neither eye sees image data intended for the other eye. This helps to prevent color artifacts and ghosting while ensuring that each eye sees all intended data.

NOTE: *Because the* **Dark Time** *interval essentially increases frame rate, increasing this setting beyond its range for the current frame rate factor will cause image break-up. 2048 x 1080 displays may be cropped. Likewise, a setting less than the minimum is not supported, and will simply revert to the minimum interval.*

The **Output Delay** setting shifts the 3D sync in relation to the Dark Time interval, starting each frame slightly earlier (-) or later (+). Adjust only as necessary-too much offset can cause bleed-through where each eye sees some data that is intended for the other.

Custom: Lamp Menu

This menu provides controls for maintaining consistent light output over time or setting a precise power level for the lamp. As shown in **Figure 3-13**, the **Custom: Lamp** menu provides controls for maintaining a specific light output over time (LiteLOC™) or setting a precise power level for the lamp.

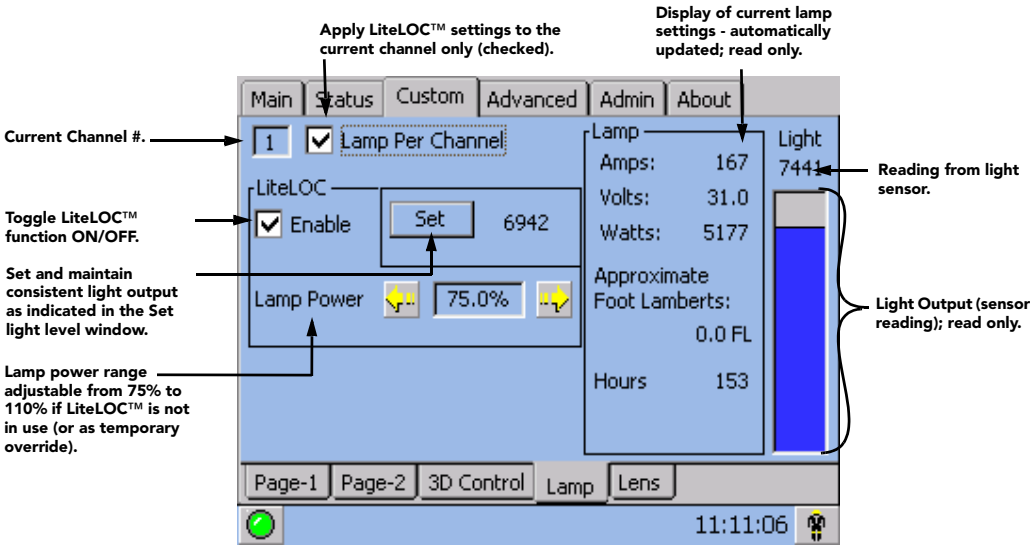

Figure 3-13 Custom: Lamp Menu Options

Table 3.7 Summary of Custom: Lamp Menu Options

CUSTOM: LAMP MENU OPTIONS	
Lamp Per Channel	When enabled, LiteLOC™ setting is applied to the specified channel. When disabled, all channels will use the global LiteLOC™ setting.
Enable	Maintains a chosen light level at the screen over time - the lamp ballast will gradually increase power to the lamp as necessary, until it reaches the maximum level possible for the installed lamp. To disable LiteLOC™ temporarily or permanently, clear the LiteLOC™ **Enable** checkbox or adjust Lamp Power directly.
Lamp Power	Indicates what percentage of power (appropriate for the installed lamp) to supply to the lamp, automatically overriding any LiteLOC™ setting that may be in effect. This causes the bar graph to rise or fall, but the LiteLOC™ line and set value will not change unless **Set** is pressed (defining a new LiteLOC™ setting). See Table 8.1 Minimum and Maximum Lamp Power by Lamp Type, on page 8-6 for lamp power ranges.
Set	With the desired light output measured at the screen, press **Set** to automatically enable LiteLOC™. The current brightness level will be maintained as long as possible. **NOTE:** *Arbitrary units shown here, not footlamberts or lumens*.

Custom: Lens Menu

This menu is used to modify the Intelligent Lens System settings for a particular channel. Adjust the Focus, Horizontal (X) and Vertical (Y) Offset, or Zoom by clicking the respective buttons in a step-wise manner or holding the button down for continuous movement. You may experience a slight delay in the response rate of the lens upon selecting the buttons. Position values on the menu will change in real-time. When holding down a button for continuous movement, the lens will begin to accelerate until the maximum velocity is reached. **NOTES: 1)** *Manual adjustments of the lens is for temporary use and will be lost once a channel is changed.* **2)** *This menu is for advanced users only.* **3)** *Keep clear of rotating parts. Remotely operated motors may start to spin without warning.* **4)** *Avoid long hair, jewelry, and loose clothing exposure to the knobs during manual adjustment.* **5)** *In case of emergency, unplug the line cord to immediately halt movement of the lens mount.*

⚠ WARNING 1) If the Motorized Auxiliary Lens Mount (MALM) is present, ensure to move the MALM to the OUT position before performing any lens calibrate or reset functions on the Motorized Primary Lens Mount to prevent collision between the projection lens and the MALM. 2) Hazardous moving parts. Keep fingers and other body parts away.

To adjust ILS settings for a particular channel:

1. Select a channel from the drop-down list.
2. Use the designated buttons to adjust Focus, Horizontal (X) and Vertical (Y) Offset, and Zoom.

Copy ILS settings to another channel:

To easily copy the settings from the current active channel to another channel, use the **Copy Lens Settings to Channel** feature. Select the channel from the drop-down list and click **Copy** to apply the changes.

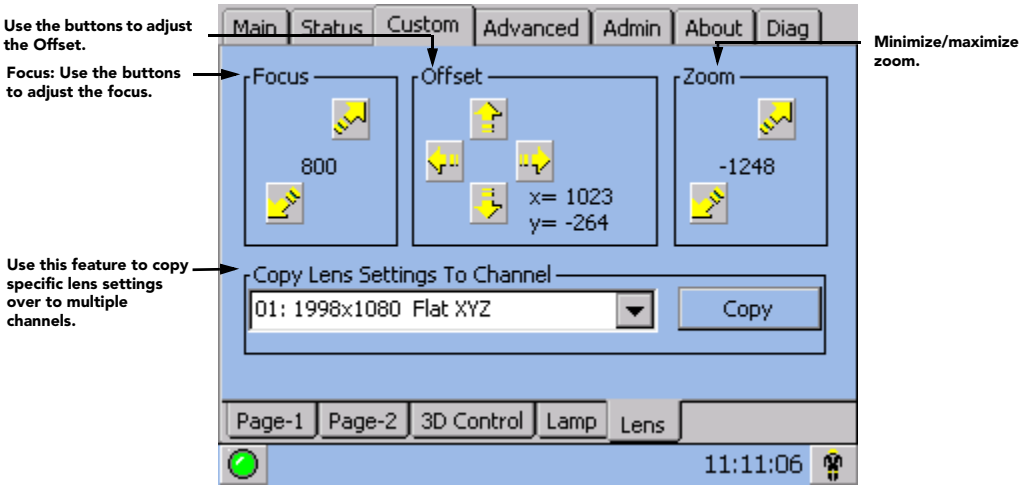

Figure 3-14 Custom: Lens Menu Options

Table 3.8 Summary of Custom: Lens Menu Options

CUSTOM: LENS MENU OPTIONS	
Focus	Click the buttons to automatically adjust the focus.
Offset	Click the up/down/left/right buttons to adjust the image and make it square on the screen.
Zoom	Click the buttons to automatically minimize or maximize zoom.
Copy Lens Settings to Channel	Use the drop-down menu to select a particular channel and click **Copy** for the changes to affect the selected channel. Repeat for every channel that requires the same ILS values.

Channel: Lens Menu Disabled

The **Channel: Lens** menu is grayed out when the **Auto ILS** feature of the **Main: Lens** menu is not selected. See **Figure 3-15**.

In the instance that an ILS is not installed on the projector or if the **Installed** option in the Intelligent Lens System region on the **Advanced: Lens** menu is not selected, the **Custom: Lens** menu will not display.

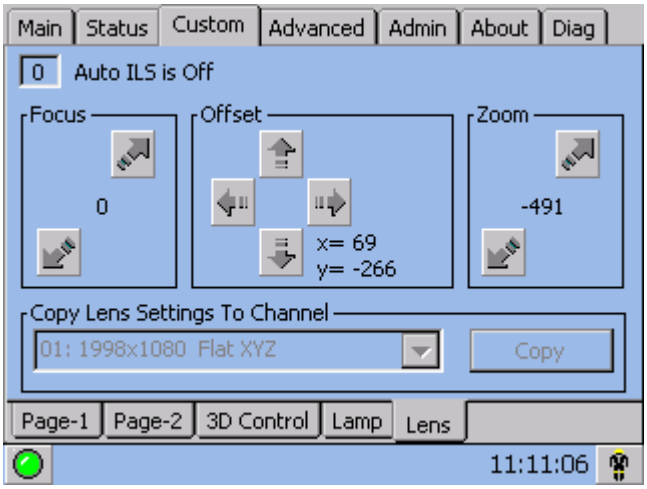

Figure 3-15 Custom: Lens Menu Disabled

3.5.5 TPC Advanced Menu

All password-protected (*requires Installer, Admin or Advanced User rights*), except for the **New Lamp** button accessible by Operator login.

The TPC Advanced menu consists of six different submenus-**Preference, Lamp, Lamp History, Lens, Test Patterns** and **User**-that enable installers, administrators and advanced users to define numerous system operating parameters, load and/or display test patterns, work with lamp settings, and set up users and their TPC access rights.

Advanced: Preference Menu

As shown below, the **Preference** menu provides access to all test patterns as well as certain system parameters. See **Table 3.9** for a complete description.

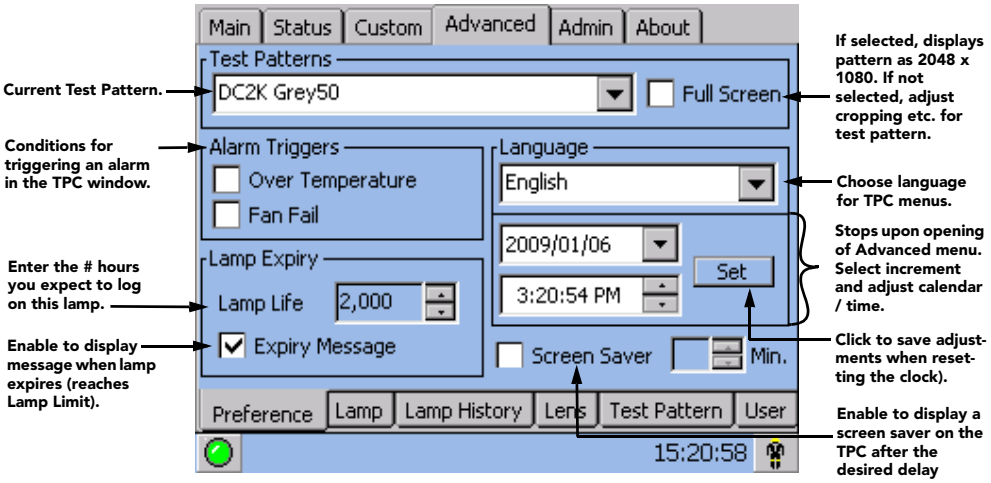

Figure 3-16 Advanced: Preferences Menu Options

Table 3.9 Summary of Advanced: Preference Menu Options

ADVANCED: PREFERENCE MENU OPTIONS	
Test Patterns	Display an RGB 12-bit test pattern, or turn patterns OFF. Always turn OFF to resume normal operation.
Full Screen	Enter a checkmark to display test patterns in full 2048 x 1080 resolution. Clear the checkbox to work with cropping controls for screen size and shape as desired. Note changes are temporary, i.e. applied for the current test pattern only. This control is not used for sources.
Alarm Triggers	Choose which conditions you want to trigger an Alarm Window (in addition to interlocks and problems with the SSM, I2C, or lamp, which are all permanent triggers). It is recommended that all triggers remain enabled during normal operation. Disable only in an rare emergencies when the alarm appears to be malfunctioning without real errors.
Lamp Limit	Enter the # hours (0-5000) that are expected for this lamp, typically no more than the number covered under warranty.
Expiry Message	Select to display the Lamp Expiry Message on the TPC when the lamp reaches its defined lamp limit.
Language	Choose English or Chinese TPC menu text for next re-boot.
System Calendar & Clock	Reset the system date/time. Adjust the desired component (date/hour/minute/second) and save with the **Set** button.
Screen Saver	Enable/disable a TPC screen saver, and set its start-up delay. **NOTE:** *To use a unique screen saver, a user-defined.bmp must be downloaded to the TPC, replacing the default.*

Advanced: Lamp Menu

The **Lamp** menu provides controls for optimizing lamp alignment (LampLOC™), maintaining a specific light output over time (LiteLOC™), or setting a precise power level for the lamp. Two read-only areas display related lamp performance details-the bar graph represents the current light output and, if LiteLOC™ is enabled, a heavy line shows the chosen LiteLOC™ setting. In addition, the **New Lamp** button activates a window for entering the serial number of a newly installed lamp. This button is also available with an Operator login with the rest of the **Lamp** menu disabled-refer to **Figure 3-4**.

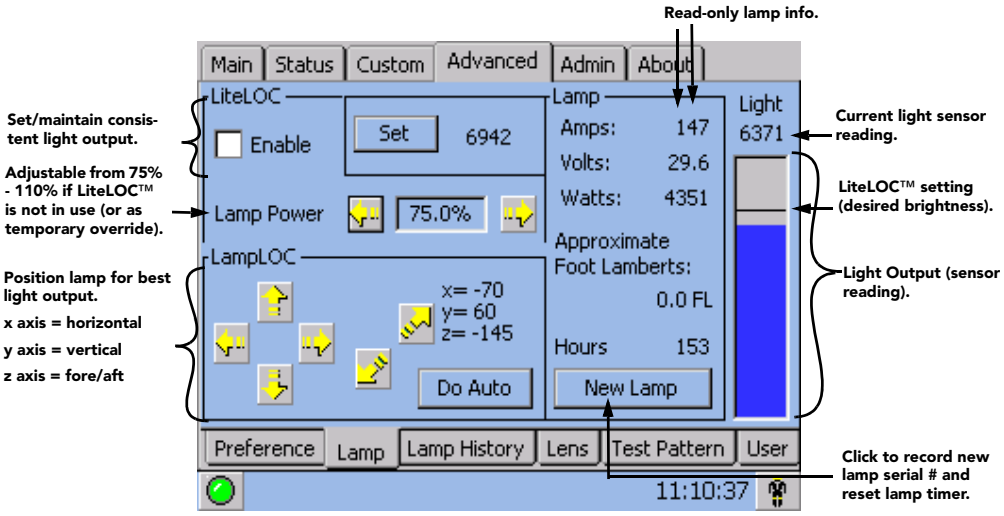

Figure 3-17 Advanced: Lamp Menu Options

Table 3.10 Advanced: Lamp Menu Options

ADVANCED: LAMP MENU OPTIONS	
LiteLOC™	Maintains a chosen light level at the screen over time-the lamp ballast will gradually increase power to the lamp as necessary, until it reaches the maximum level possible for the installed lamp. To disable LiteLOC™ temporarily or permanently, clear the LiteLOC™ **Enable** checkbox or adjust Lamp Power directly.
Set (Brightness)	With the desired light output measured at the screen (typically 14 Fl), press the **Set** button to automatically enable LiteLOC™. The current brightness level will be maintained as long as possible. **NOTE:** *Arbitrary units-of-measure appear here, not footlamberts or lumens*.
Lamp Power	Indicates what percentage of power (appropriate for the installed lamp) to supply to the lamp, automatically overriding any LiteLOC™ setting that may be in effect. This causes the bar graph to rise or fall. The LiteLOC™ line and Set values will not change unless **Set** is clicked (defining a new LiteLOC™ setting). Refer to Table 8.1 Minimum and Maximum Lamp Power by Lamp Type, on page 8-6 for lamp power ranges.
LampLOC™	LampLOC™ buttons activate motors that reposition the bulb in the projector for optimized light output. Use the *Do Auto* button (recommended) or the individual buttons. **NOTES: 1)** *Lamp must be ON to begin. If it is turned OFF during a re-positioning, the bulb will return to its former position.* **2)** *Douser opens and remains non-functional during a LampLOC™ adjustment.*
Lamp (read-only)	Indicates the current lamp age, amps (current), volts (voltage) and watts (lamp power). Read-only.
New Lamp	Activates the lamp history window and text editing box for recording a new lamp's serial number, which resets the lamp timer.
Light Level	Indicates current light output (shown as solid vertical bar) and LiteLOC™ level set (single horizontal line). Consider the value at the top of the meter as arbitrary-i.e., not representing actual lumens or fL.

Adding a New Lamp

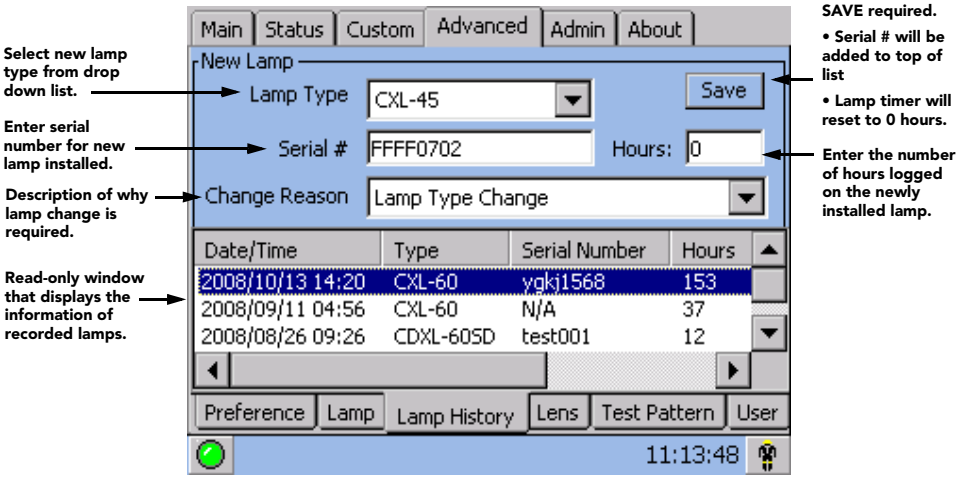

Figure 3-18 New Lamp Fields

Table 3.11 New Lamp Fields

NEW LAMP FIELDS	
Lamp Type	Select lamp type using the drop down list.
Serial #	Touch to activate keyboard for editing.
Change Reason	Select description that best explains why lamp was changed.
Save	Touch to record the new serial number and date, and automatically reset the lamp timer to the same value entered in **Hours** text box.
Hours	Enter the number of hours logged on the newly installed lamp. If the lamp has never been used the value should be **0**.

Advanced: Lamp History Menu

A list of the last 10 recorded lamp serial numbers appears here, along with their dates of entry and number of hours logged. This is a read-only menu unless activated via the **New Lamp** button on the **Advanced: Lamp** menu, which adds edit boxes and a **Save** button for recording in memory the serial number of a new lamp and the number of hours it has already been in use (if applicable).

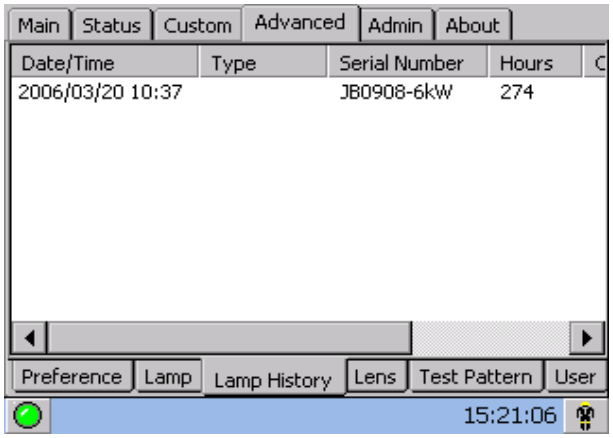

Figure 3-19 Advanced: Lamp History Menu Options

Advanced: Lens Menu

As shown in **Figure 3-20**, use the fields provided in the **Lens** menu to select a lens type and record its serial number.

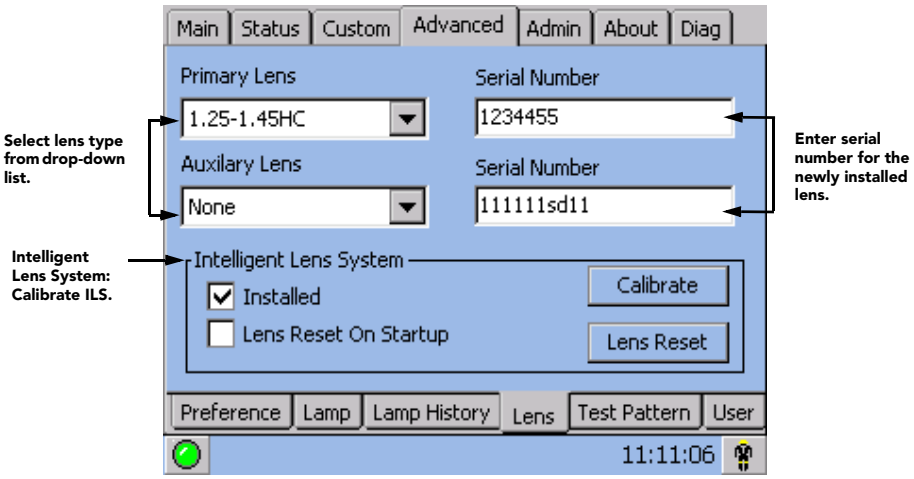

Figure 3-20 Advanced: Lens Menu Options

Table 3.12 Advanced: Lens Options

ADVANCED: LENS OPTIONS	
Primary Lens	From the drop-down menu, select the type of primary lens installed on the projector.
Auxiliary Lens	If an auxiliary lens is installed, select it from this drop-down list. The selections include anamorphic and wide converter lens. This selection is grayed-out when there is no auxiliary lens connected.
Serial Number	Enter serial number of the installed lens.
Installed	Enables/disables the Intelligent Lens System (ILS). **NOTE**: ***Installed*** *must be checked in order to use ILS functionality.*
Lens Reset On Startup	Select this checkbox for the ILS to locate the sensor flags and the backlash of each motor at the same time. Keep checked if you need to reset the lens often.
Calibrate	Click **Calibrate** to calculate the amount of backlash for each motor and make the necessary adjustments to ensure proper motor range. Calibration should only be used when changing lenses and is a necessary step at that time.
Lens Reset	When **Lens Reset** is clicked, the motors on the lens move to a central location (mechanical center) before moving back to the original position. This feature is useful for initiating an auto lens reset. Each motor can either be reset individually or select All Axes when prompted to reset the 4 motors in succession.

Advanced: Test Pattern Menu

In the **Advanced: Test Pattern** menu, use the double windows to organize and manage the master list of RGB test patterns. Patterns in the top window are available to the user via the **`Test Pattern`** button on the **Main** menu of the TPC, and will be displayed in the order of their appearance in this window. The bottom window contains an alphabetical list of all remaining test patterns. Together, both windows form the master pull-down list of test patterns available in the **Advanced Preferences** menu.

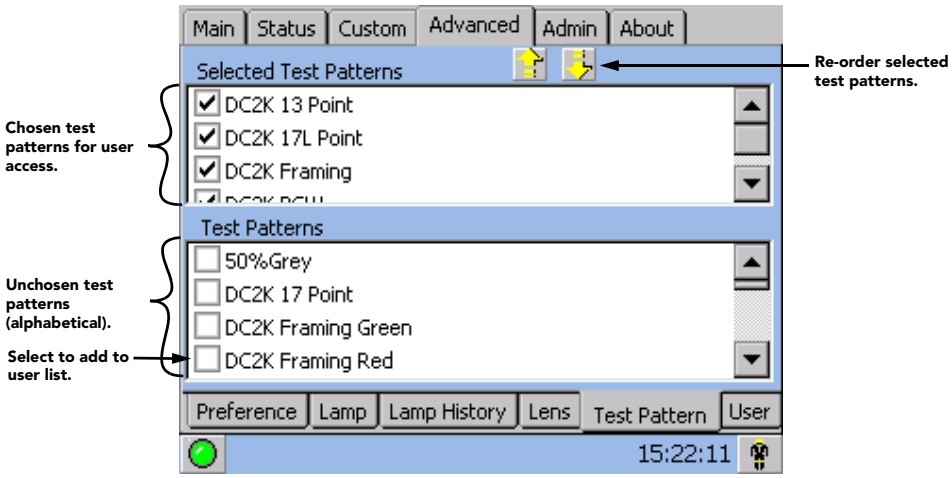

Figure 3-21 Advanced: Test Pattern Menu Options

TO TOGGLE A PATTERN INTO ANOTHER WINDOW:

Select a test pattern checkbox to instantly move the pattern to the other window.

TO RE-ORDER SELECTED TEST PATTERNS:

To change the order in which a test pattern will be projected when cycled with the Test Pattern button, highlight the name (***not*** its checkbox) in the top window and use the arrow keys near the top of the menu to move the pattern higher or lower in the list.

Advanced: User Menu

Manage TPC users, passwords and user rights here-you will be able to manage users having the *same* or *fewer* rights than your current login level, and you can change the password for the current login.

Upon entering the **User** menu, your current TPC login user name appears in the **User Name** box. For example, if you logged on to the TPC as advanced, the **User Name** box will display **advanced**. Other user names visible in the drop-down list will be those with the same or fewer rights-none will have more rights. For each name, their corresponding user rights appear in the **User Level** box directly below.

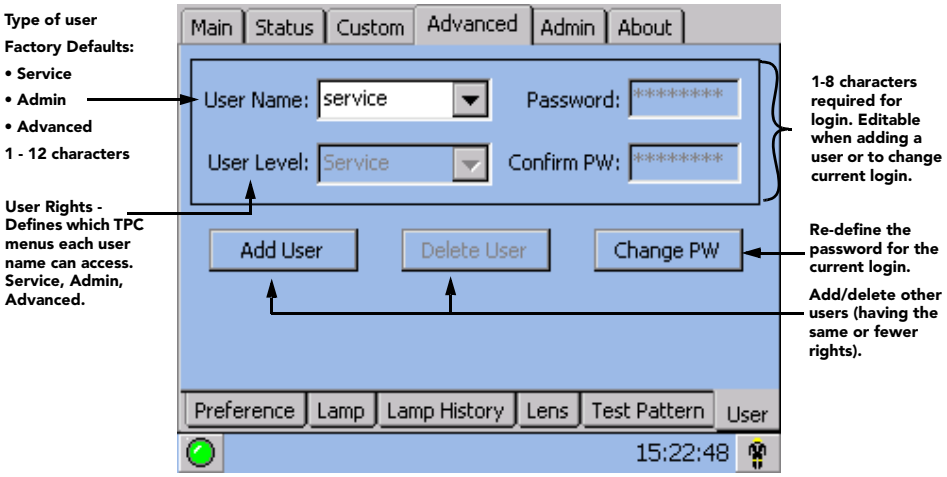

Figure 3-22 Advanced: User Menu Options

From your current login, add or delete more users, assign their rights, or change the password of your current login. See details in the table below.

Table 3.13 Advanced: User Menu Options

ADVANCED: USER MENU OPTIONS	
User Name	Upon entering the User menu, this box displays the name of the current login. The pull-down list displays all other user names having equal or fewer rights. Factory Defaults: Service, Admin, Advanced. For new names, use 1-12 characters.
User Level	Upon entering the User menu, this box displays the rights of the current login (read only). These rights determine which TPC menus and functions are available. The User Level tracks with different user names in the box above. When adding a user, User Levels can be chosen from in a pull-down list-note that only those levels with rights that are equal to or lesser than those of the current login will appear.
Password	Enter a new 1-8 character password for the current login or when adding a new user. Non-editable at other times.
Confirm PW	Re-enter the 1-8 character password entered in **Password** box. Editable when changing the current password or when adding a user.
Change PW	Change the password for the current login.
Change Level	Change the rights for a different user having the same or fewer rights as the current login.
Add User	Activates the editing box for defining a new user, their rights and password. You cannot define more rights than your own.
Delete User	Delete a different user who has the same or fewer rights as the current login, and who is currently displayed in the User Name box. The current login (user) cannot be deleted.
Cancel	Escape to the original User Menu without saving changes.
Save	Record current User Menu settings in TPC memory.

TO ADD A NEW USER

1. Press **Add User**
2. Enter desired **User Name**
3. Enter a **Password**
4. Re-enter the new password in the **Confirm PW** box
5. Press **Save**

TO DELETE A USER

1. Select the desired User Name from the **User Name** list (cannot be current login)
2. Press **Delete User**
3. Press **Save**

TO CHANGE A USER'S RIGHTS (USER LEVEL)

1. Select the User Name you wish to modify (cannot be current login)
2. Press **Change Level** button
3. Select the new **User Level** desired for this user
4. Press **Save**

TO CHANGE YOUR PASSWORD

1. Select **Change PW** button
2. Enter the desired password
3. Re-enter the new password in the **Confirm PW** box
4. Press **Save**

WHO IS CURRENTLY LOGGED ON?

Enter the **User** Menu-the **User Name** displayed is currently logged on.

3.5.6 TPC Admin Menu

NOTE: *Password-protected; Administrators, installers and service technicians only***.**

The seven **Admin** submenus offer a broad range of options used primarily for defining how the projector will respond to incoming sources in the given environment, or for adjusting a major system parameter affecting overall performance. Five of the **Admin** submenus-**Source, Screen, Gamut, IP Config** and **GPIO**-are available to both administrators and installers. Two others-General and Lamp-are restricted to installers (service) only. See **Figure 3-23**. Other users cannot access **Admin**.

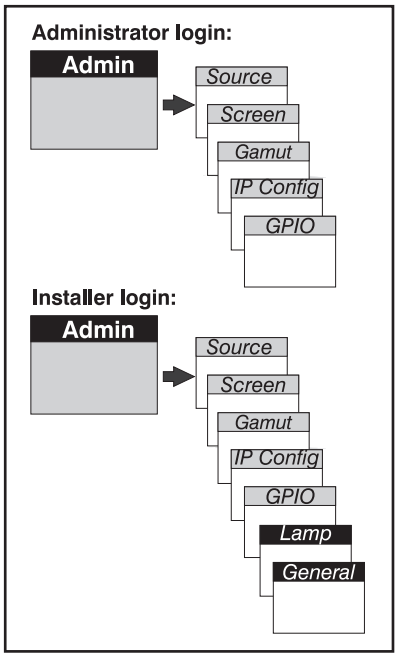

Figure 3-23 Access Rights for Admin Menus

Admin: Source Menu

Incoming sources can vary widely in their current resolution and original aspect ratio. The projector must be able to respond to the myriad of possible combinations, projecting full images of the desired size, content, and proportion in every case. This consistency is achieved by creating a variety of *source files* in projector memory, each of which indicates the following for the projector:

- Incoming **resolution** (# pixels across, # pixels top-to-bottom)
- **Offset** desired (i.e., amount of data to discard. Rare.)
- Desired **aspect ratio** (i.e., the original display format to be recovered)

Although in rare cases the content distributor may include this source information as part of a pre-defined PCF (applied by using the PCF in the projector), alternatively these variables can be defined either in the Source submenu in the TPC as described here, or by using *DCP Librarian*. With a good collection of assorted source files available in memory, the proper file can then be quickly chosen from within the **Custom** menu for implementation in the projector whenever a matching input signal is encountered.

Note that for any source, the projector relies on *Source* file settings as well as *Screen* file settings. See also **Admin: Screen** menu.

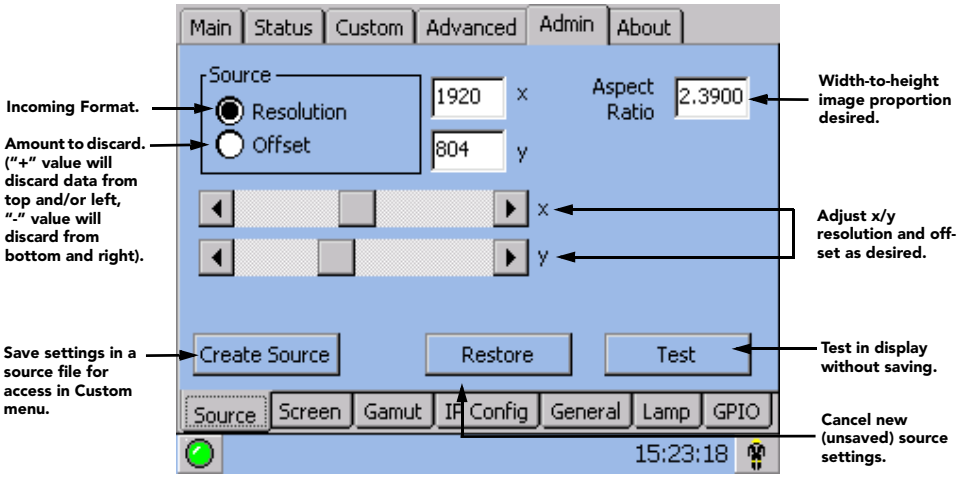

Figure 3-24 Admin: Source Menu Options

Table 3.14 Admin: Source Menu Options

ADMIN: SOURCE MENU OPTIONS	
Resolution	Activate, then record the x/y resolution of your incoming signal, such as 2048 (x) and 1080 (y), or 1920 (x) and 1080 (y). Note that resolution must match the incoming signal format (assuming you want to display all of it), and may differ from the original resolution that you want to recover. See *Resolution Notes* below.
Offset	Activate, then record how much incoming data you wish to discard, essentially delaying the starting point for processing. Leave at **0** to process all available data. See *Offset Notes* below.
Aspect Ratio	Enter the aspect ratio of the original cinema format you are trying to recover, usually 2.39 or 1.85. Because the incoming signal may be pre-squeezed, the aspect ratio entered here will not necessarily match that of the *incoming* aspect ratio. See *Aspect Ration Notes* below.
Slidebars	Adjust resolution and/or offset as desired.
Create Source	Save current resolution, offset, and aspect ration settings as a *Source* file that will be accessible and applied from within the **Custom** menu.
Restore	Cancel new (unsaved) source settings of resolution/offset/aspect ratio.
Test	Apply current settings to the image without saving.

RESOLUTION NOTES:

To capture/process all of the incoming data, enter the full resolution of the incoming source material or leave at **0** (default). Regardless of whether or not the original material has been squeezed for use with an auxiliary lens, enter the current incoming resolution. This may not necessarily match the resolution of the projector or the original filmed material, depending on how the source was formatted before distribution. For example, an original 2048 x 1080 native source supplied pre-squeezed as 1920 x 1080 requires a source file indicating this incoming 1920 x 1080 resolution.

To capture only a portion of an incoming image full-screen-like a zoom function-, enter the approximate horizontal width and vertical height defining the area of the image you wish to zoom in on. The projector will automatically scale a center area of this size so that it fills the projector's 2048 x 1080 display, and remaining data is ignored. You may have to experiment with the values to accurately zoom in on a precise area, and you must also define offset (see below) if you want to zoom in on an area other than the center.

OFFSET NOTES:

Offsetting an image is achieved by defining how much horizontal width and vertical height to discard. Offset coordinates can be particularly useful when zooming in on a portion of the image- they establish the top left corner location of the zoom area, with Resolution (above) determining the size of the area. Leave offset at **0** (default) to process all incoming data or to zoom in at the center of the image, or set to a positive or negative value as described:

- A positive x/y value discards image data from top and/or left.
- A negative x/y value discards image data from bottom and/or right.

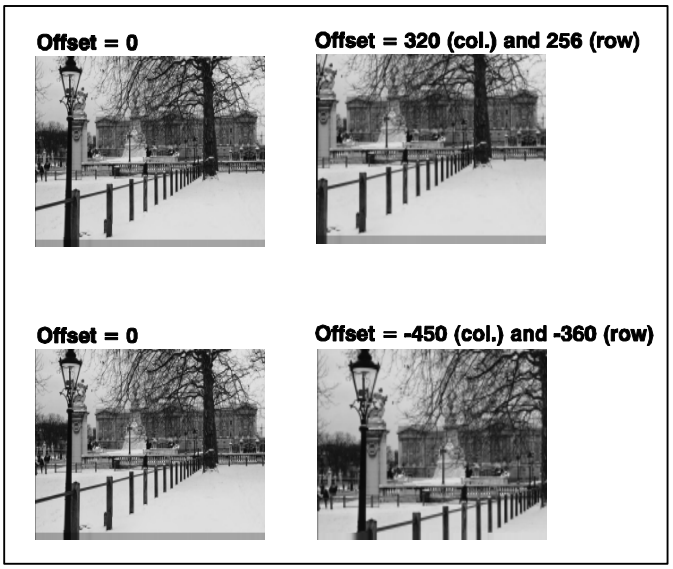

Figure 3-25 Offset Differences

ASPECT RATIO NOTES:

Table 3.15 lists the sixteen most common source setups, which are selectable from the Main menu pages. In the event your source material is pre-scaled or compressed, enter the desired aspect ratio. Adding the 1.25x anamorphic or 1.26x wide converter lens will widen a squeezed image back to its original scope aspect ratio. For sources that are not pre-squeezed, aspect ratio can be left at **0**.

Table 3.15 Pre-configured Source Settings

ADMIN: SOURCE SETTINGS	
(INCOMING) RESOLUTION	(ORIGINAL) ASPECT RATIO
1998 x 1080	1.85 (flat)
2048 x 858	2.39 (scope)
1998 x 1080	1.85 (flat)
2048 x 858	2.39 (scope)
Reserved PCF Flat	- (flat)
Reserved PCF Scope	- (scope)
1920 x 1038	1.85 (flat)
1920 x 804	2.39 (scope)
1920 x 1038	1.85 (flat) …cont'd
1920 x 818	2.35 (scope)
Alternate Content 1	Auto square pixels
1920 x 1080	2.39 (scope)
Alternate Content 2	Auto square pixels
1920 x 800	2.40 (scope)
3D Flat	Auto square pixels
3D Scope	Auto square pixels

Admin: Screen Menu

The **Screen** menu defines 1) what portion of the projector's display panel you wish to use, and 2) what cropping is needed to disguise possible keystoning or other geometric aberrations. Once saved, a screen file can be used with any incoming source as desired-screen data is not included in a PCF, and is independent of Source settings. Consider screen files as convenient compensations for physical limitations in the environment. You will typically need one or two screen files per site.

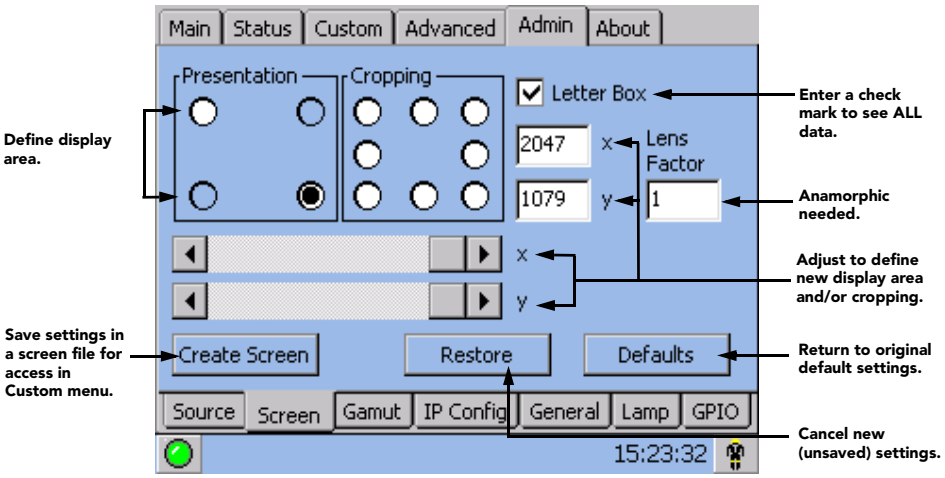

Figure 3-26 Admin: Screen Menu Options

Table 3.16 Admin: Screen Menu Options

ADMIN: SCREEN MENU OPTIONS	
Presentation	Presentation points define the display size and location (default = full 2048 x 1080 panel). See *Presentation Notes* below.
Cropping	Cropping hides unwanted data, useful if the image appears keystoned, etc. See *Cropping Notes* below.
Letter Box	Letter Boxing ensures that all image data is displayed and its aspect ratio is maintained. See *Letter Box Notes* below.
Lens Factor	Define the auxiliary lens needed (1.25 for the CP2000 series) to stretch an image horizontally. Leave at **1** (default) if no auxiliary lens is needed.
Slidebars	Adjust coordinates for presentation area and/or cropping as desired.
Create Screen	Save current presentation, cropping, lens factor and auxiliary factor settings as a *Screen* file accessed and applied from within the **Custom** menu.
Restore	Cancel new (unsaved) screen settings.
Test	Apply current settings to the image without saving.

PRESENTATION NOTES:

Presentation points define what region of the projector's available display area responds to incoming data. By default, the projector will use its complete display area, scaling the incoming data as necessary. If, for some reason, you want to limit the display area, enter the desired upper left and lower right presentation coordinates (or adjust with slidebars). You can define a smaller rectangular area in which the left and right top corners will always share the same y-coordinate (as will the left and right bottom corners), and the top and bottom left corners will share the same x-coordinate (as will the top and bottom right corners). Thus upper right and lower left coordinates are not available to define the area. Incoming data will then automatically resize to fill the reduced rectangular area defined by the new coordinates, and any display pixels outside of this area remain off (black). **NOTE:** *Presently only a rectangular area can be defined, as shown below. A trapezoidal adjustment or electronic keystone with sloped sides is not possible.*

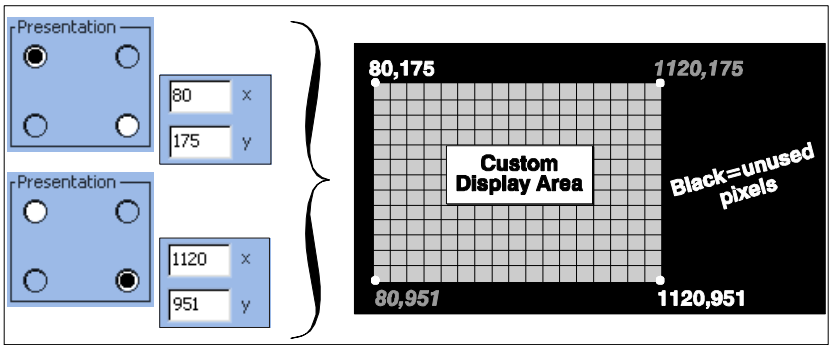

Figure 3-27 Screen Presentation Coordinates

CROPPING NOTES:

Cropping is the digital equivalent of filing aperture plates in a film projector to perfect the image squareness. For example, if the bottom of the image appears slightly wider than the top, activate the bottom left or right cropping point in the Screen menu and change the coordinates to crop or bring in the corner(s) of the image slightly-either enter the specific coordinates, or adjust with slidebars. Note that this is cropping, not electronic keystone adjustment. In Figure 3-28, cropping simply corrects a display that overlaps the available screen.

In most cases, cropping assumes that the entire projector display area is in use, thus the coordinates initially define pixel locations on the projector's 2048 x 1080 display area. Images that are significantly smaller in format may actually lie beyond the range of one or more cropping adjustments, thus you will not see evidence of cropping on the edges.
To correct a bowed edge so that it appears straight in the display, activate one of the cropping bow points between two corner points and adjust the slidebar or enter the specific x or y value desired.

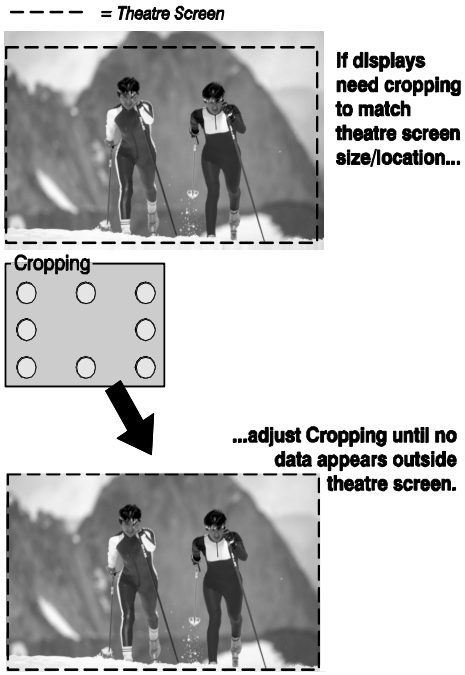

Figure 3-28 Simple Cropping Example

LETTER BOX NOTES:

Letter Boxing ensures that all image data is displayed and its aspect ratio is maintained.

Use letter box for virtually all normal operation. It ensures that all incoming data will be displayed within your defined presentation area, and nothing will be discarded. If desired, any black bars (unused pixels) could then be cropped off using the cropping control. Although disabling the letterbox control also fills the defined presentation area, any extra data beyond this area-whether top-and-bottom or left-and- right-will be discarded.
NOTE: *Keep **Letter box** checked for all cinema presentations.*

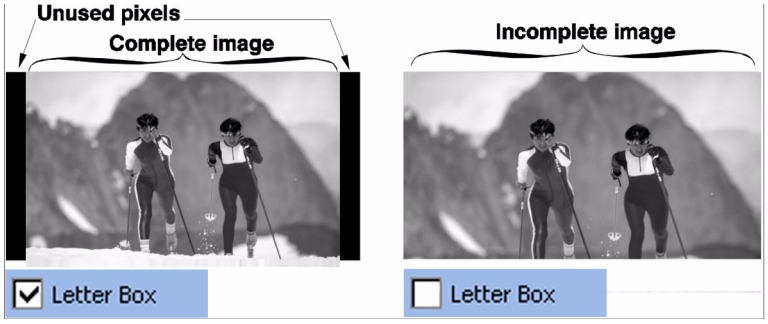

Figure 3-29 Letter Box vs. Non-Letter Box

Admin: Gamut Menu

The primary function of the color **Gamut** menu is to ensure that the projector can achieve any specific known and pre-defined industry color performance standard-called a *target* color-within its current environment, and within a desired tolerance. In this menu you can record measurements for currently projected uncorrected colors, modify or create custom *Target Color Gamut Data* (TCGD) files for new color gamut performance, and set how closely you want to match the target white.

Recording the projector's uncorrected color performance is typically completed as a final step-like a calibration-after installation. For this one-time procedure, the installer measures initial native (i.e., uncorrected) colors at the screen, enters the data as **Measured Color Gamut Data** on the left side of the **Gamut** menu, and typically saves an MCGD file called OnSite. By default, the projector will use this MCGD to calculate-and implement-precise processing modifications needed to achieve any *target* color gamut on screen, essentially compensating for the type of port window, screen, lens, light output, ambient light and other current environmental factors influencing on-screen colors. These various industry standards for color performance (TCGDs) will then be consistently achieved from source-to-source and from site-to-site. If the environment degrades or changes (such as if an auxiliary lens is swapped on and off), or if an internal optical module is replaced, create one or more new MCGDs, naming them as desired. To use an MCGD file as the reference file for target color processing (such as with a certain source and/or lens), select it in the **Custom** menu.

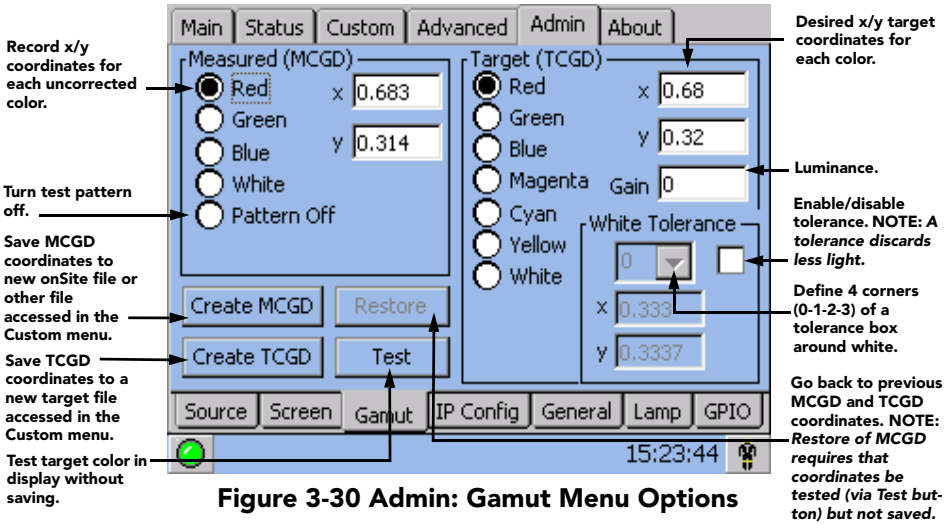

Figure 3-30 Admin: Gamut Menu Options

Table 3.17 Admin: Gamut Menu Options

ADMIN: GAMUT MENU OPTIONS	
Measured (MCGD)	Activate each color, which projects a special full-field test pattern, and enter the x/y coordinates measured at the screen. See *Measured (MCGD) Notes* below.
Pattern Off	Leave the full-field test pattern mode.
Target (TCGD)	Activate each color and enter the x/y coordinates desired. See *Target (TCGD) Notes* below.
Gain	Luminance (intensity) of each color when compared to white. See *Gain Notes* below.
White Tolerance	Define the location (enter x/y coordinates) of each corner of a tolerance box around the target white point for the current TCGD. A tolerance minimizes the light discarded in achieving the target white in the display, and is recommended for theatre use. Without tolerance, the target white point will be matched precisely in displays using this TCGD, regardless of how much light must be discarded. See *White Tolerance Notes* below.
Checkbox	Enter a checkmark to enable tolerance around the white point. Delete the checkmark to match the white point precisely.
Restore	Cancel new (unsaved) TCGD settings.Cancel *tested* (via **Test** button) but unsaved MCGD settings. See *Restore Notes* below.
Test	Apply current settings to the image without saving.
Create MCGD	Save current MCGD settings as a new OnSite or other file name. **NOTE:** *OnSite is a permanent over-write of any previous OnSite file, and cannot be cancelled in the future except by another over-write.* If desired, create other MCGD files to reference under specific conditions and for specific sources or channels. See *Create MCGD Notes* below.
Create TCGD	Save current settings to a new TCGD. **NOTE:** *Industry-standard TCGD files are write-protected and cannot be modified unless saved under a different filename.* For theatre use, there should be little need to create custom TCGDs, as the pre-defined TCGDs are used instead. See *Create TCGD Notes* below.

MEASURED (MCGD) NOTES:

For each color, record the native uncorrected x/y color coordinates measured at the screen. These values simply represent the *currently viewable* primary colors, and collectively (when saved) will define the raw color performance reference point for this projector in the current environment. Each radio button activates the corresponding full-field YCbCr test pattern of this native color so that measurements can be taken. For example, to measure the red coordinates, click the **Red** radio button to change the screen display to full-field red, and measure coordinates at the screen. Repeat for each color, and record them in the nearby *x/y* text boxes. After all colors have been measured and recorded, select **Pattern Off** to leave the special test pattern mode. To cancel changes and return to the previous MCGD coordinates, leave the menu without saving.

CREATE MCGD NOTES:

This button collects the current color values entered for Measured (MCGD), where you can save them as a new OnSite MCGD file or as a different MCGD file with a *different* name. Note that a new OnSite overwrites any previously defined OnSite file, and will be the *default* reference point for all future color processing-the old OnSite file cannot be recovered. By default, the projector will refer to OnSite data to calculate the corrections needed to achieve a known *target* color performance standard in the future. However, if the site requires more than one set of native MCGD values (such as when an auxiliary lens is swapped in or out), you can create a new MCGD file with a different file name. Each setup (channel) can then use any desired MCGD file as the basis for the color corrections needed for a target color. MCGD files are chosen in the **Custom** menu.

NOTE: *Once created, user-created MCGD files can be deleted only by using Christie's licensed* ***DCP Librarian*** *software.*

Important! ***Create MCGD*** *is a permanent over-write of any previous MCGD* ***OnSite*** *file, and will define new default color processing in the projector.*

TARGET (TCGD) and CREATE TCGD NOTES:

Upon opening the **Gamut** menu, the Target (TCGD) color fields show the corresponding x/y color coordinates defined for the current target color gamut in use. You can create a new custom target by defining different coordinates for one or more TCGD colors (or simply by changing the tolerance state), and saving as a new TCGD file. Note, however, that industry-defined TCGD standards, such as P7v2 and others, are write-protected and cannot be changed-modifications to such a target must be saved under a new TCGD filename entirely. Once you have created a new TCGD file, it will appear in the **Custom** menu, where it can be selected for use in the display.

NOTE: *For most applications, TCGD values are used simply to verify that displayed colors actually do match the standard-i.e., you can measure each color at the screen and compare its coordinates to those appearing in the TCGD fields to confirm that the projected colors are accurate. For special applications in which you want to create a unique target color standard, enter new TCGD coordinates as desired, and then save as a new TCGD file. Apply as usual from the* **Custom** *menu.*

GAIN NOTES:

Gain indicates the luminance (a.k.a. brightness or intensity) of each color as compared to full-on white, ranging from 0 (0%) to 2 (100%). You may want to modify one or more gain values to precisely match color levels in other adjacent displays or to accommodate a studio's internal color management technique. Gain would rarely, if ever, be adjusted for theatre use.

WHITE TOLERANCE NOTES:

The chosen target for white (White x/y) coordinates under Target (TCGD) may be relaxed, if desired, by establishing a small tolerance box around it. This box represents four coordinates (0-1-2-3) plotted on a 1931CIE Chromaticity graph, and may vary from TCGD to TCGD. If desired, define new tolerance coordinates for the current TCGD to increase or decrease this tolerance area, or to change its shape or location-larger boxes relax the tolerance, reducing the loss of light caused by precise matching.

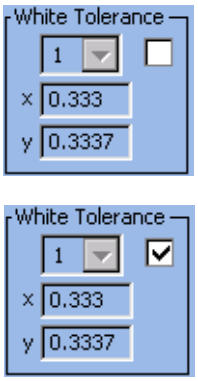

Non-theatre (P7V2 telecine). White point will be matched exactly.

Theatre (P7V2 theatre). White point match is more relaxed.

Figure 3-31 White Tolerance

Clear the checkbox if the projector's whites must precisely *match* the target white point (typical for telecine use) defined for the current TCGD. If this match can be anywhere within the tolerance box (typical for theatre use), enter a checkmark. The checkbox status is saved with the TCGD. Keep in mind that some light is usually discarded for an exact match, resulting in a dimmer image-it is recommended that you enable the tolerance box for all applications requiring maximum brightness, such as in theatres. Do not enable the tolerance box if exact color performance is more crucial than overall image brightness, such as in telecine applications.

RESTORE NOTES:

This button enables you to return to the Gamut menu settings that were present when you opened the menu, however the precise behavior depends on whether you are working with *measured* (MCGD) or *target* (TCGD) settings.

To Restore MCGD Settings:

The **Restore** button is disabled unless you have used the Test button. To cancel new MCGD settings and return to the previous MCGD settings, the new settings must be tested (via **Test** button) but not yet saved. If not yet tested, you can either leave the menu and cancel the settings as requested by the dialogue box, or attempt to save but cancel out of it. If you have already saved a new OnSite file (by pressing the **Create MCGD** button), the old OnSite file cannot be restored.

To Restore a TCGD File:

Select the **Restore** button any time before saving.

Admin: IP Config Menu

Use the IP Config menu when you need to define or change the Ethernet settings-i.e., network address-of the projector and/or its TPC or if you want to configure SNMP (remote monitoring). **NOTE:** *Record any new settings on Section 1.4 Who Should Use This Manual of this manual.*

DLP or TPC Configuration

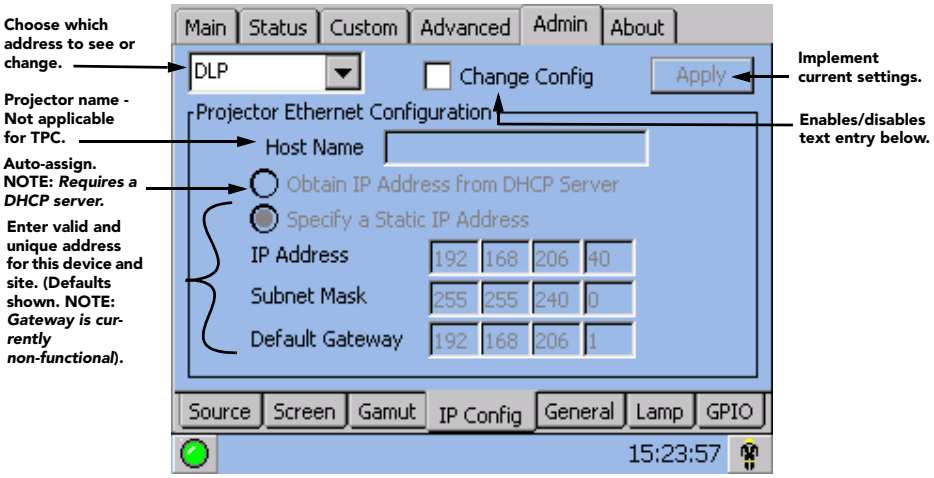

Figure 3-32 Choosing DLP (or TCP) from Admin: IP Config Menu

SNMP Configuration

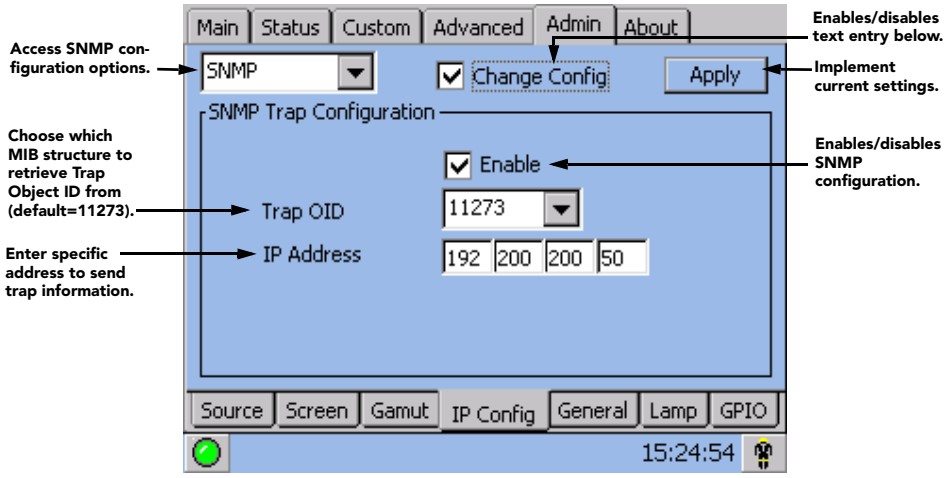

Figure 3-33 Choosing SNMP from Admin: IP Config Menu

Table 3.18 Summary of Admin: IP Config Menu Options

ADMIN: IP CONFIG MENU OPTIONS	
DLP vs. TPC vs. SNMP	Select which device address you wish to see or set. DLP = projector, TPC - Touch Panel Controller, SNMP = The Internet standard protocol developed to manage nodes (servers, workstations, routers, switches and hubs etc.) on an IP network. SNMP enables network administrators to manage network performance, find and solve network problems, and plan for network growth.
Change Config	Enter a checkmark to edit the Ethernet Configuration text boxes defining the device's address.
Host Name	Enter a name for the projector (optional)
Obtain address from DHCP	Allow the projector's IP address to be auto-assigned by your network's DHCP server. **NOTE:** *Currently not supported.*
Specify a Static IP Address	Enter the full *valid* and *unique* address supplied by the network administrator for using the device at this site.
IP Address	When *DLP* or *TPC* is selected: The first three octets of the IP address identify the network to which the device belongs; the last octet identifies the specific device (i.e., the projector or the TPC). Keep in mind that if you change the node (any of the first 3 octets), the device will then belong to a different network and will not interact until the other device is also changed accordingly. *When SNMP selected:* Enter specific IP address where trap information (device status notification, i.e. fan failure) is sent.
Subnet Mask	All IP Addresses for a network belong to the same Subnet Mask as defined by the network administrator.
Default Gateway	Not used. All entries are ignored.
Apply	Implement your current Ethernet Configuration settings. *
Trap OID	Retrieve information on the condition of a device from a specific MIB (Management Information Base) structure. Default = old MIB structure(11273), new structure = 25766

**Changes in the IP Config menu automatically change the projector IP address appearing in the Admin:General menu, which identifies which projector the TPC is currently set to control.*

HOW TO CHANGE YOUR PROJECTOR'S IP (NETWORK) ADDRESS:

For a stand-alone projector, its default Ethernet (network) settings are fine and should not be changed. In a projector that is to be networked, however, this default address will likely be invalid for the network at a given site. Consult the site's network administrator to determine the necessary settings for compatibility with the local network, then use the TPC to define these new settings in the projection head. **NOTES: 1)** *Password-protected; requires a Christie installer login.* **2)***Projector can be on the network during these changes, if desired.*

1. Select the **Projector** button and enter a checkmark in the **Change Config** checkbox. This will enable editing of the Projector Ethernet Configuration text boxes.
2. Enter the projector's new valid and unique **IP Address** desired. The last octet can be any value from 10-99.
3. Enter the projector's new **Subnet Mask** address settings required.
4. Select the **Apply** button to implement the new address settings in the projector. A caution will remind you that the address must be unique and valid for the site-if you are unsure, cancel and consult again with the network administrator. Otherwise, click **OK** to finish. **NOTE:** *The new projector address will also be implemented in the* **Admin: General** *menu, so that the TPC will look for this projector when you have finished setting up all network changes.*

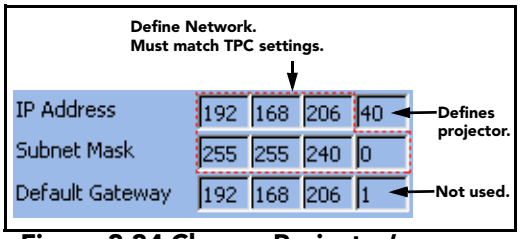

Figure 3-34 Change Projector's IP Address

5. When a new address is implemented in the projector, another dialogue box will remind you that if your settings moved the projector to a different network (most common), the TPC will no longer be able to control the projector. Ignore any **Cancel** buttons that may appear in this dialogue box. You must therefore immediately change the TPC Ethernet configuration if you have changed either or both of the following:
   - Any of the first 3 octets of the **IP Address** (i.e., the network node)
   - The **Subnet Mask**

   Be sure to change the TPC address before re-booting the projector. **Warning!** *For both devices-projector and TPC-the Subnet Mask and the first 3 octets of their IP addresses must match, otherwise the devices are on different networks and cannot communicate. Do not re-boot until this match is confirmed.*

   You do ***not*** have to change the TPC Ethernet configuration if you have changed only the last octet of the projector's **IP Address**. In this case (rare), both devices still belong to same network and will be able to communicate with each other.
6. Change the TPC Ethernet network configuration (below).

HOW TO CHANGE YOUR TPC'S IP ADDRESS:

Select **TPC** at the top of the **IP Config** menu, then change the TPC's IP address in the same manner as you changed the projector's address. **Warning!** *The first 3 octets of the IP address must match those for the projector. See Steps 2 and 3, above.*

NOTE: *This is the simplified explanation of valid addressing. A trained network administrator may expand the range of valid addresses.*

To implement the address changes in your projector and TPC, re-boot.

Important! *Do not forget to re-boot the projector.*

Admin: General and Admin: Lamp Menus

NOTE: *Installer login required.*

From within the **Admin** menu, an installer can access three additional submenus not available to any other user. These submenus are primarily for defining critical system parameters such as the projector's IP address, lamp type, and user rights for remote access and data logging. Installers can also record minimum and maximum footlambert readings to define a range from which other TPC lamp readings are interpolated, and they can set whether Status menu temperatures appear in Celsius (default) or Fahrenheit. A typical **Admin: General** submenu appears below.

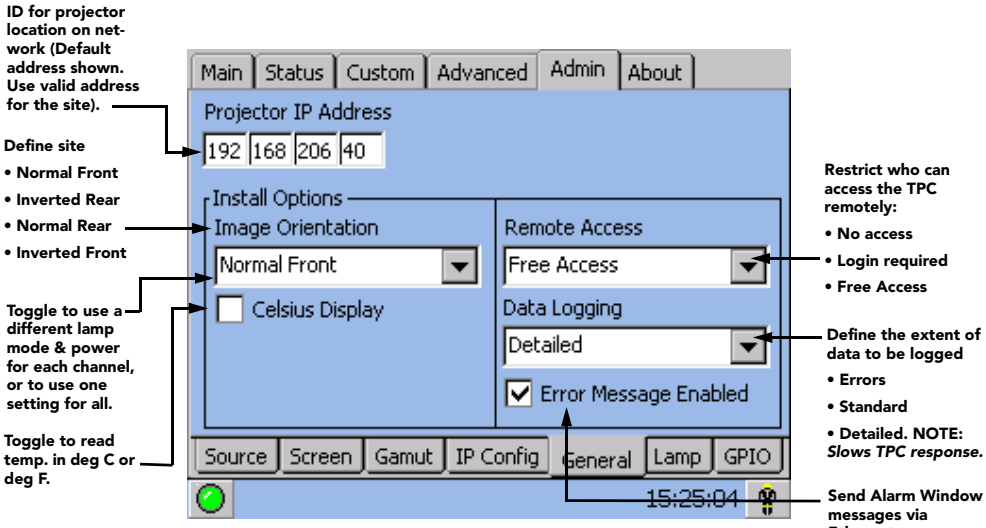

Figure 3-35 Admin: General Menu Options

Table 3.19 Summary of Admin: General Menu Options

ADMIN: GENERAL MENU OPTIONS	
Projector IP Address	Determines which projector the TPC controls, and always terminates in *10-99*. All four values (octets) must be valid for your site. For example, perhaps you can use the default 192.168.206.*10* to control a single-projector installation. Then use 192.168.206.*11* to control a second projector at that site, 192.168.206.*12* to control a third projector, and so on. **NOTE:** *This menu does NOT define the projector's address*
Image Orientation	Define the orientation of the screen relative to the projector.
Celsius Display	Choose Celsius or Fahrenheit temperature display for Status menu.
Remote Access	Define whether all users can access TPC functions remotely or not at all, or whether a login is required.
Data Logging	Define the extent of activity to record in an Ethernet-accessible TPC data log (default=Errors only). A good data log can be helpful when troubleshooting, but use with caution- detailed logging will slow TPC responses. Note that when the memory card becomes full, logging continues and simply writes over the oldest entries.
Error Message Enabled	When enabled, an error message will be sent via Ethernet whenever an alarm condition is encountered.

Admin: Lamp Menu

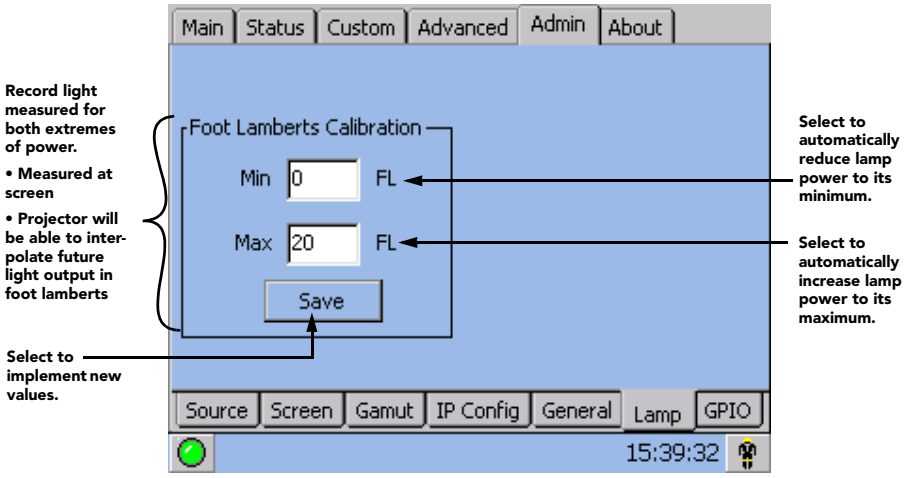

Figure 3-36 Admin: Lamp Menu Options

Table 3.20 Summary of Admin: Lamp Menu Options

ADMIN: LAMP MENU OPTIONS	
Footlamberts Calibration	Activate each text box to automatically drive the lamp at its minimum or maximum power. record light measured at the screen for both extremes in power, defining a range of footlamberts possible. Light readings (fL) appearing elsewhere in TPC will then be interpolations based on this range. Click **SAVE** to implement new values. **NOTE**: *Re-calibration must be done with new lamp change.*

Admin: GPIO Menu

Use the **Admin: GPIO** menu to configure GPI macros for LAMP ON/OFF, DOUSER OPEN/CLOSE and AUXILIARY LENS IN/OUT and also GPO macros for LAMP STATE, DOUSER STATE, AUXILIARY LENS STATE and SYSTEM HEALTH STATUS. **NOTES: 1)** *Only GPIO 1-5 can be programmed.* **2)** *Use of GPIO for 3D will automatically un-program any other use for that pin.*

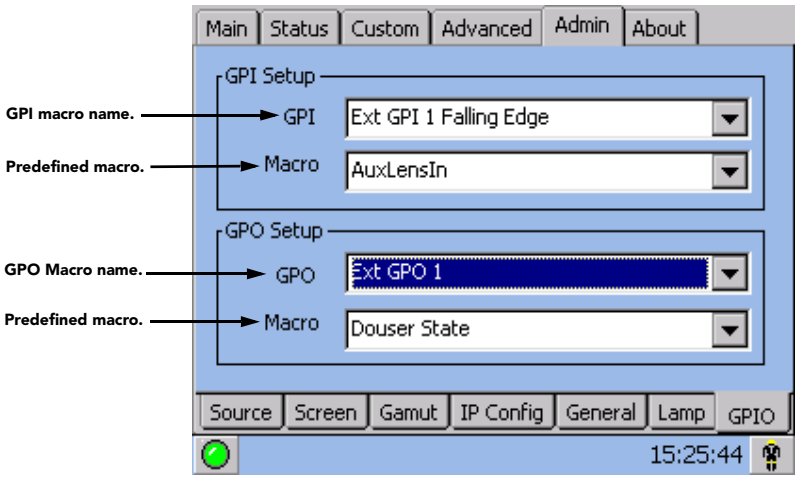

Figure 3-37 Admin: GPIO Menu Options

3.5.7 TPC About Menu

The **About** menu lists which versions of critical components are installed in the projector. As shown in **Figure 3-38**, this is a read-only menu for all users, and includes a **STOP** button for installers/service to exit TPC software entirely and return to Windows™.

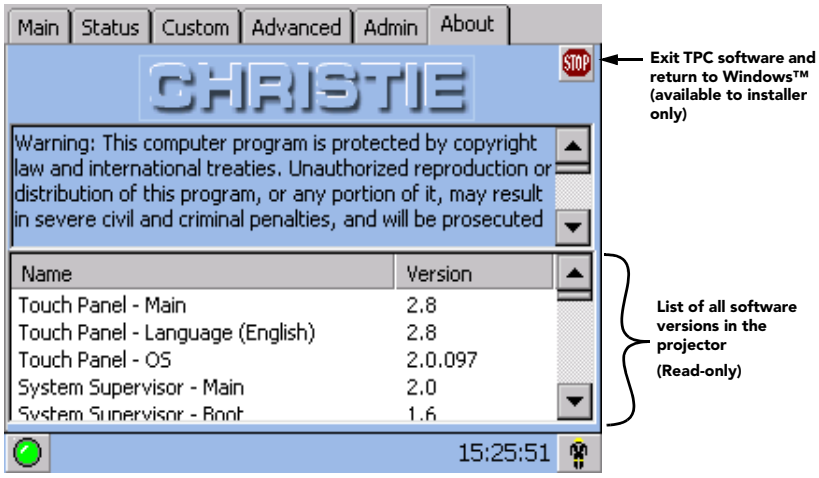

Figure 3-38 About Menu

3.5.8 Understanding Versions in Your Projector

Consult the About menu to determine the current level of a hardware or software component installed in your projector. Upgrading any of these components requires a Christie service technician.

TOUCH PANEL - Determines the software functionality of the Touch Panel Controller (TPC), its menu language, and its operating system.

SSM - Indicates which System Supervisor Module is installed (H/W) and what SSM software is present (Main and Boot portions).

ENGINE - Indicates the main processing software of the projector. This is a summary of the *Interface*, *Processor* and *Formatter Interface* entries that appear below it in the **About** menu-i.e., any change to one of these elements would automatically denote a new Engine version. **NOTE:** *The remaining individual red, green and blue formatters are independent of Engine version.*

3.5.9 Selecting a Display (Starting a Presentation)

NOTES: 1) *For manual operation (i.e., non-automated).* **2)** *In order to use the TPC software originally shipped with the projector, the installer typically connects a laptop and uses Christie's DCP Librarian setup software to download all necessary configuration files to the projector for use at the TPC.*

To change to a new source-i.e., a new presentation or display-do the following:

1. Ensure the ***CP2000-SB*** and TPC are both powered up and operating normally.
2. On the *Touch Panel Controller* (TPC), select the **Main** menu tab.
3. On either of the **Main** menu pages, press the desired display button-the image will update accordingly.

Refer to **Figure 3-39**. **NOTES**: **1)** *Depending on your expected needs, your installer may or may not have configured all sixteen buttons for use.* **2)** *Buttons may have any icon and/or text.*

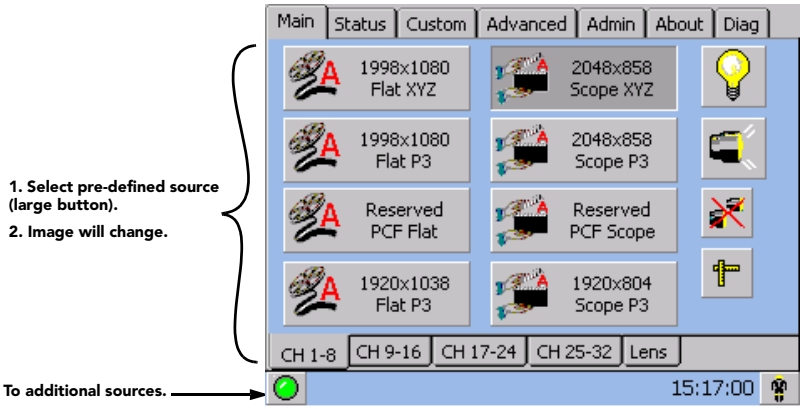

Figure 3-39 Source Selection on Main Menu (sample)

What Happens When a Button is Selected?

For any display button on the two-page **Main** menu, the projector interprets incoming signal data according to one of sixteen user-selectable display setups defined at the time of ***CP2000-SB*** installation (and/or with each subsequent release of a new digital cinema feature) and stored in projector memory. Each display setup consists of *Projector Configuration File* (PCF) information as well as additional processing, display parameters and screen settings optimized for a particular cinema feature or alternative content source. For proper processing and display of a source, press pre-assigned display button (see **Figure 3-39**) corresponding to the setup you wish to use-the button will then appear recessed and the projected image will update according to the display setup assigned to this button. No further adjustment of the image should be necessary. To change to a different presentation, select a different display button.

Cinema Vs. Non-Cinema Sources

Typically the display setups for digital cinema servers are carefully configured when the projector is installed so that presentations will be automatically optimized and require no further adjustment. A user need only select the relevant display button. Displays of non-cinema or other alternative content, such graphics or video sources connected to DVI ports, are also usually pre-configured for easy selection. Refer to *Section* 5 Non-Cinema Operation for details about non-cinema applications and display adjustments.

Other Methods of Source Selection

Depending on your installation, you may be able to select a source via communication from a different controller.

Regardless of how the display file is selected, the feature will appear on screen according to the specific display settings recorded in that file. If the screen display does not appear as expected, this indicates that the display setup is incorrectly configured for the incoming source. Try a different display file. If the image is still incorrect, the display setup may first have to be re-configured with new settings. Contact the trained operator responsible for updating display setups.

3.5.10 Errors and Alarms

Encountering the following conditions will always trigger a flashing red alarm window at the TPC:

- **ACTIVATED SAFETY INTERLOCK**-caused by an open lamp door, a failed extractor or lamp fan, or an open fire alarm switch. For any safety interlock breach, the lamp ballast will immediately stop powering the lamp.
- **TAMPER DETECTION**-caused by unlocking the projector lid. Failure is also logged and prevents display of incoming CineLink®2-encrypted cinema source material.
- **FAILED LAMP IGNITION**-Failure to successfully strike the lamp.
- **COMMUNICATION ERRORS**-SSM and/or I^2C links may be malfunctioning.

It is also recommended that the following additional conditions always be set to trigger an alarm window (default). Select these triggers in the **Advanced: Preferences** TPC menu:

- **OVER TEMPERATURE**-caused when the temperature in the card cage, red/blue DMDs, integrator, prism or SSM has exceeded the operating specification.
- **FAN SPEEDS**-caused when a main intake fan, card cage fan, or the laminar air flow device fan fails or is too slow.
- **LAMP EXPIRY**-appears when lamp has reached the end of its life (as defined in the Lamp Limit setting).

Important! *For normal operation, do not disable alarm triggers.*

3.6 Remote Control of the Touch Panel Controller

Most TPC projector functions can be controlled remotely, typically at a controller, via simple bi-directional ASCII messaging on an Ethernet communication link.

WHAT SETUP IS NEEDED? To control these TPC functions remotely via your own controller, you must open an Ethernet socket between your controller and the valid TPC address. Refer to *Section 3.6.6 Setup and Shutdown* for complete instructions. Note that only one physical connection is permitted at any given time, and access to remote functions may be limited by the installer. Do not use an RS-232 (serial) link.

3.6.1 Understanding ASCII Message Formats

All remote control information passes in and out of the TPC as simple messages consisting of command code and any data related to it. Such messages can be a command to set a projector parameter at a specific level, such as changing to a certain channel. Or the controller can request information, such as what channel is currently in use-the projector then returns the data in a reply message. Regardless of message type or origin, all messages use the same basic format and code as shown in **Figure 3-40**. Where applicable, a message can expand to include additional parameters of related data.

	Message Format	Function	Examples
From Controller	(Code Data)	**SET** *(set channel to 103)*	(CHA 103) or (CHA103)
From Controller	(Code ?)	**REQUEST** *(what's current channel?)*	(CHA?)
From Projector	(Code ! Data)	**REPLY** *(channel is 106)*	(CHA!106)

Figure 3-40 The 3 Message Formats (shaded message is from proj.)

3.6.2 Message Components and Structure

START AND END OF MESSAGE: Every message begins with the "**(**"character and ends with the "**)**" character. Note that if the start character is received before an end character of the previous message, the partial (previous) message is discarded.

FUNCTION CODE: The function you wish to work with, such as channel switching or picture mute, is represented by a three-character ASCII code (A-Z, upper or lower case). This function code appears immediately after the leading "**(**" that starts the message.

REQUEST/REPLY SYMBOL: If the controller is ***requesting*** information from the projector, a question mark (**?**) appears directly after the function code. If the projector is ***replying***, an exclamation mark (**!**)appears directly after the function code. For set messages, neither of these characters appear-the code is followed by the data itself (see next paragraph).

DATA: The value for a given projector parameter, such as ON or OFF, appears in ASCII-decimal format directly after the request/reply symbol. Unless you add an optional space after the symbol (i.e., before the data) in a set message, data immediately follows the request/reply symbol without a space. Other details about data:

- All values returned by the projector (***reply*** messages) have a fixed length of either 3 or 5 characters regardless of the actual value-the value is padded with leading zeros as needed.
- Data in set messages does not require padding.
- For any given parameter, data length is always the same. E.g., the **picture mute** value, which is either on (**1**) or off (**0**) is always 3-digits: 001 or 000.
- Within one message, multiple parameters of data must be separated by one **space** character.
- Data pertaining to a specific source other than the current source is preceded by: the letter **S**, the source number (i.e., channel), and a space. This is similar to an extra parameter **P0**.
- Text parameters such as channel names are enclosed in double quotes following the data, as in **Name.**

TEXT PARAMETERS: Most data is simply a numerical value, however some messages also require text. For example, a **channel naming** message typically includes a text-based name after the channel number-enclose this text in double quotation marks, as in "**`Tilt the Wagon`**". Use all characters as desired except for the following special characters-these require a 2-character combination as shown in **Table 3.21**:

Table 3.21 Special Characters for Text

If you want this...	Enter this...	Description
\	\\	Backslash
"	\"	Quote
(	\(	Left bracket
)	\)	Right bracket
0x0A	\n	New line - if the text can be displayed on more than one line, this will cause the next character to be displayed at the start of the line that follows the current one.
0x1B	\x	control code (ESC)

3.6.3 Sample Messages and Their Meaning

Table 3.22 Sample Messages

Desired Action	Message	Description
Get current Chan #	(CHA?)	Request by controller for current channel #
Chan # reply from proj.	(CHA!101)	Reply from proj. that current channel is 101
Set Chan #	(CHA 101)	Switch to the first channel on the TPC
Get picture mute status	(PMT?)	Request by controller for picture mute status
Picture mute reply from proj.	(PMT!000)	Reply from proj. that picture is mute is off.
Set picture mute	(PMT 1)	Turn the picture mute on (blank the image)

3.6.4 What is Actually Sent in a Message?

Although you will send and read all messages as strings of ASCII characters, the actual message travels as a sequence of bytes. Each character in a unicode message requires 2 bytes, whereas the non-unicode requires only 1 byte. See example in **Figure 3-41**, which illustrates a “picture mute is off" reply from the projector:

ASCII =	(	L	P	L	I	2	0	0	0	)
NON-UNICODE HEX =	0x28	0x4c	0x50	0x28	0x21	0x32	0x30	0x30	0x30	0x29
UNICODE HEX =	0x00 0x28	0x00 0x4c	0x00 0x50	0x00 0x28	0x00 0x21	0x00 0x32	0x00 0x30	0x00 0x30	0x00 0x30	0x00 0x29

Figure 3-41 ASCII as Non-unicode and Unicode

NOTE: *Use of unicode or non-unicode in messages is auto-detected from the TPC.*

3.6.5 Available ASCII Codes

All available ASCII message codes, including those with multiple parameters, are listed and explained in *Appendix B: ASCII Messages*.

3.6.6 Setup and Shutdown

SETUP

1. In the **Admin: General** menu, define which users (all, none or some) have remote access rights.
2. Open an Ethernet socket to the TPC address (socket = 5000). By default, the TPC address is 192.168.206.***110***. If you have additional TPCs, the installer should have defined their addresses as 192.168.206.***111***, 192.168.206.***112***, and so on, or used other addresses that are valid for your site.
3. Communication protocol should now be established (and can be confirmed with a PNG? if desired).

   NOTE: *The socket will automatically close after 15 minutes of inactivity. Program your controller to send a PNG? message every 5-10 minutes to maintain communication and keep the socket functioning.*

   Important! *To prevent shutdown of the socket, program the controller to send a PNG? every 5-10 minutes.*

SHUTDOWN

Warning! *You must close the application and shut down the socket properly before shutting down the controller.*

3.7 Upgrading SSM Firmware

These instructions explain how to upgrade SSM firmware without upgrading the rest of the software. The correct SSM firmware must be downloaded to the SSM in order for the DMD temperature warning and shutdown limits to be properly set. You will use an FTP program to transfer the new version file from your PC to the TPC currently connected to your ***CP2000-SB*** projector.

3.7.1 Requirements

- **TPC-642** or **TPC-60** or **TPC-66** used with any ***CP2000-SB*** projector.
- **Windows™ 2000** or **XP** running on a laptop or PC.
- **Correct SSM Firmware version**
  - Version 2.0 for ***CP2000-SB*** (106-004101-01 only)
  - Version 2.1 for ***CP2000-SB*** (106-004101-02 or higher)
- **FTP application**, such as FFFTP or WS_FTP, or as provided in Windows™ XP or Internet Explorer.

3.7.2 Update Procedure

NOTE: *Screen shots throughout this section are for representation purposes only and may differ slightly from those on your screen.*

FFFTP is a freeware FTP client application recommended for communicating with the TPC via file transfer protocol. **NOTE:** *FFFTP is the only supported FTP software*. When installed and configured on a PC, the PC and TPC can transfer files back-and-forth via FTP—PC files appear in the left window, TPC files appear on the right. For this update to take effect, you will be required to replace the *SSM.HEX* file located on the TPC "ISPM" directory (Right Window in FFFTP) with the new *SSM.HEX* file.

1. Run FFFTP on a PC that is connected to the same network as the TPC. At the main window, click the **Connect** icon or **File Connect** menu. The **Host List** box should appear (**Figure 3-42**).

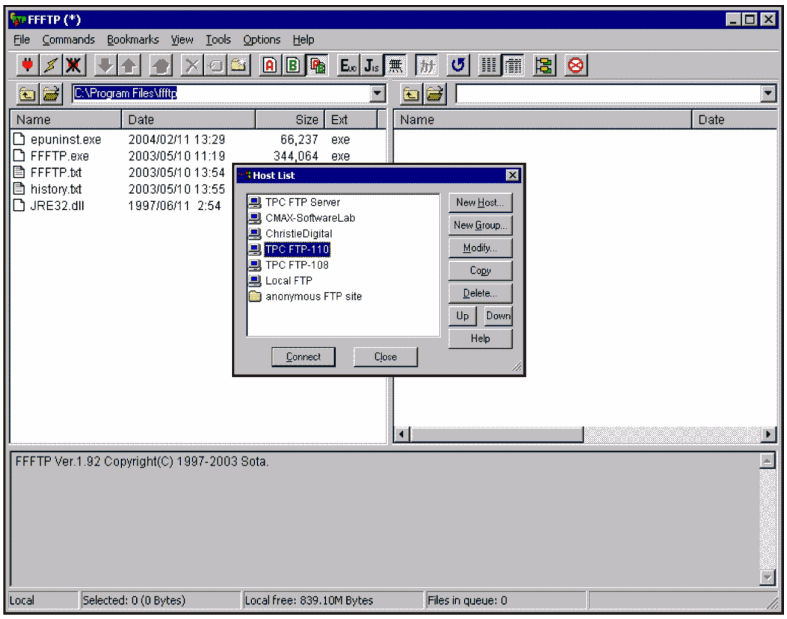

Figure 3-42 Main FTTP Window with Host List

2. From the **Host List** of FTP servers, click the TPC FTP server and then **Connect**. Or, if using FFFTP for the first time, click **New Host** to create a new connection to the FTP Server. The **Host Setting** dialog box should now appear.
3. Complete the **Host Setting** entries (**Figure 3-43**).
   - **Profile Name** (name desired for TPC)
   - **Host Name/Address** (TPC IP default address is 192.168.206.110—use the unique and valid address defined for your site)
   - **Username** (TPC user name)
   - **Password/Phrase** (TPC user password)

   TIPS: Use the **Initial Local Folder** to store the location where you keep the TI install files. Enter **/ISMP** in the **Initial Host Folder** to save steps later.
4. Keep other settings as default. Click **OK** to go back to the **Host List** window.
5. Under the **Advanced** tab, ensure the selection to **Use PASV mode** is unchecked (**Figure 3-44**).
6. In the **Host List** window, click your desired site and then click **Connect** to connect to the TPC FTP server. Both devices should now appear in the FTP windows.
7. Transfer the file from the PC (left-side of screen) to the TPC ISPM folder (right-side of screen). **NOTE:** *PC should be pointing at SSM.HEX. The TPC should be pointing at the IPSM folder.*
8. Close the FTP program and reboot the TPC.

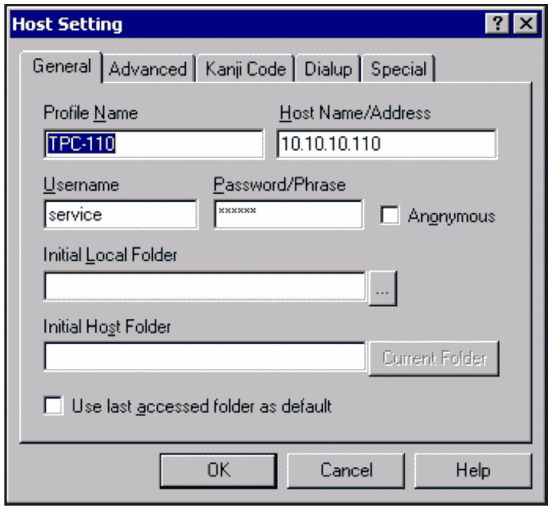

Figure 3-43 Host Setting

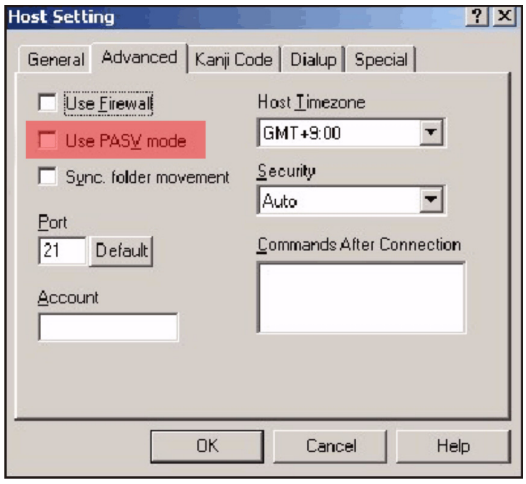

Figure 3-44 Host Setting-Advanced Tab

3.7.3 Troubleshooting

- If FFFTP fails to download files properly, reconnect the TPCServer and try again.
- If FFFTP still fails to download files properly, re-boot the TPC by disconnecting then re-connecting it.
- If FFFTP still fails to download files properly, try the WS_FTP or similar program.

3.8 Working with the Lamp

Simple software controls and adjustments can help to optimize lamp performance and ensure the brightest, most uniform image possible for the life of the lamp. These controls are located in the Main, Advanced: Preferences, and Advanced: Lamp menus on the TPC.

NOTE: *For individual menu functions, refer to Section 3.5 Using the Touch Panel Controller (TPC).*

3.8.1 Turning the Lamp ON/OFF

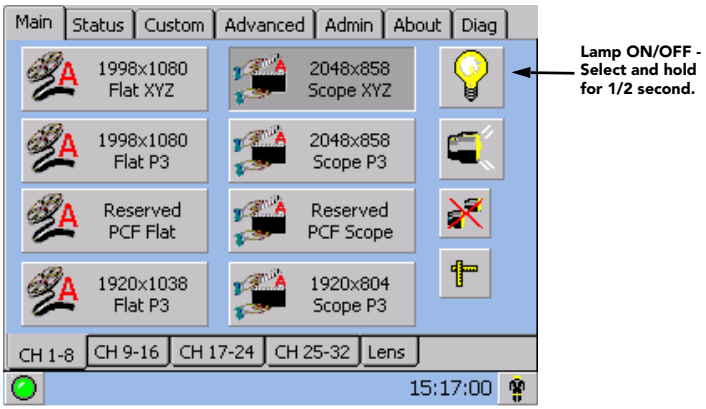

Figure 3-45 Lamp Button on TPC

ON

With all CP breakers set to ON, ignite the lamp by pressing the lamp button on the **Main** menu of the TPC-make sure to press and hold for approximately ½ second.

OFF

To turn the lamp OFF, press the lamp button on the **Main** menu of the TPC-make sure to press and hold for approximately ½ second. Then **WAIT** for fans to run for 10 minutes to cool the lamp and other components then turn off all breakers.

3.8.2 If the Lamp Won't Turn ON

If the lamp fails to ignite, the projector will automatically re-try ignition using 100% of the maximum power acceptable for the lamp. If this re-try also fails, and there is no interlock problem such as an open lamp door, a new lamp is likely needed.

3.8.3 Adjusting Lamp Power (LiteLOC™ or Manually)

There are two different lamp modes for general operation-you can maintain either a specific *brightness* level (LiteLOC™) or a specific *lamp power* level. **NOTES: 1)** *Requires Advanced/Admin TPC rights.* **2)** *Keep in mind the formula: Current (Amperes) x Voltage (Volts) = Lamp Power (Watts).* **3)** *Adjust LiteLOC™ before or after adjustment of lamp position.*

Using LiteLOC™

Maintain a specific brightness level from your lamp over time as follows (**Figure 3-46**):

1. In the TPC's **Advanced: Lamp** menu, adjust Lamp Power until the desired light output is reached at the screen (typically 14 fL). Any LiteLOC™ will automatically be disabled.

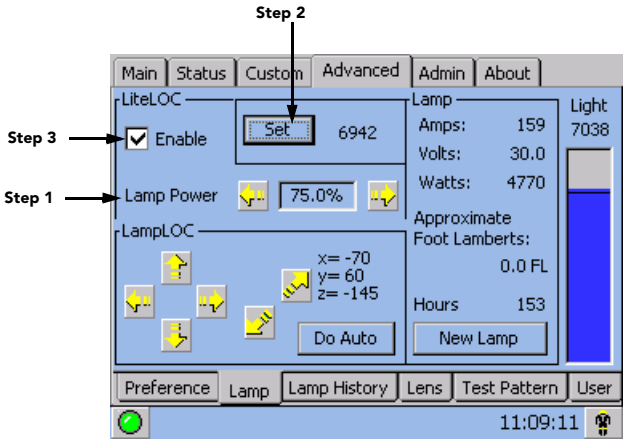

Figure 3-46 Setting LiteLOC™

2. Click **Set** to record the current brightness reading in memory (**NOTE:** *Arbitrary units-of-measure are shown above the light output bar*).
3. Enable LiteLOC™. As the lamp ages and loses efficiency, the projector will gradually and automatically supply more current to the lamp as necessary to maintain your chosen level of light output for as long as possible (the light level is read from an internal light sensor).
4. To change your LiteLOC™ setting, adjust the Lamp Power as desired and then click **Set**. The LiteLOC™ function will automatically begin to maintain this new setting.

WHEN SHOULD I USE LiteLOC™?

Typically, most theatre installations would use LiteLOC™ for daily operation, since it need only be set once for each lamp install, and ensures consistent worry-free brightness at the screen for as long as possible. If desired, reset LiteLOC™ to a different level at any time, or override with a specific lamp power setting.

HOW LONG CAN I MAINTAIN BRIGHTNESS?

Software can maintain a LiteLOC™ setting until the required power exceeds the maximum rating for the lamp (2.0, 3.0, 4.5, or 6.0 kW) by approximately 10%. The lower your LiteLOC™ setting, the longer it will take to reach this over-drive threshold and the longer you can maintain the desired brightness.

For example, a 6000 watt lamp (6.0 kW) can be safely driven at no more than 6600 watts. To produce 14 fL at the screen, a new lamp would likely need less than this maximum rating-perhaps 5120 watts (example only). Over time, however, the lamp will require more and more current in order to produce the 14 fL, until eventually the lamp wattage reaches its 6600 overdrive maximum, and the power to it automatically levels off. At this point, the LiteLOC™ function terminates (i.e., the power level stabilizes), the lamp will begin to dim normally with age, and the light output gauge will begin falling. Either reduce your LiteLOC™ setting or replace the lamp.

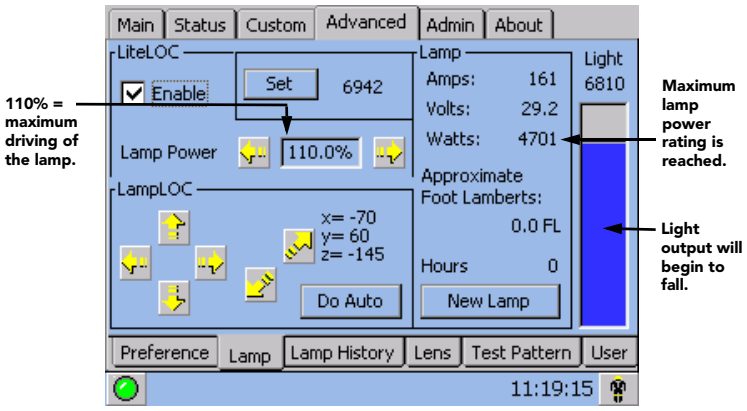

Figure 3-47 LiteLOC™ Expiry (sample)

Using Lamp Power

To change to a different power level, simply enter a new Lamp Power percentage at any time. This will override (and temporarily disable) any LiteLOC™ setting that may be in effect:

1. Set **Lamp Power** to apply a specific percentage of power appropriate for the installed lamp. LiteLOC™ will automatically be disabled.
2. Brightness will change accordingly, new values will appear for amps, volts and watts, and the blue light output bar graph will move above or below the LiteLOC™ line, depending on the new setting.

As the lamp ages and becomes more inefficient, your chosen power level will gradually produce less and less light output. To return to the previous LiteLOC™ setting, enable the LiteLOC™ checkbox.

NOTE: *When re-enabling LiteLOC™ from a current brightness level that is more than 10% brighter or dimmer than the LiteLOC™ setting, the recovery will be immediate. When re-enabling LiteLOC™ from a brightness setting that differs by only 10% or less, the recovery will be gradual.*

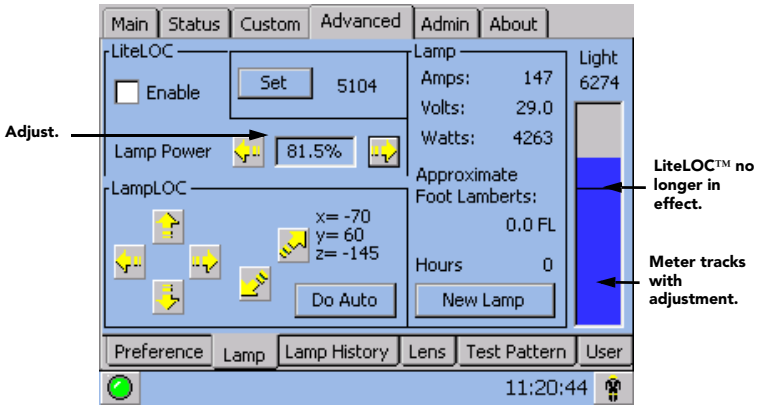

Figure 3-48 Using a Specific Power Level

UNDERSTANDING LAMP POWER VALUES (%)

The Lamp Power range of 75-110 represents 75%-110% of the power appropriate for the installed lamp. In other words, you can apply anywhere from 75% of the maximum power intended for the installed lamp up to an over-drive that exceeds the maximum rating by approximately 10%. Both current (amps) and power (watts) thresholds are read.

Keep in mind that higher lamp power settings do shorten lamp life-for best results, avoid over-driving a lamp for extended periods. When using LiteLOC™ (which automatically increases lamp power over time), check the Status menu lamp power readings periodically as the lamp ages, to prevent prolonged over-driving.

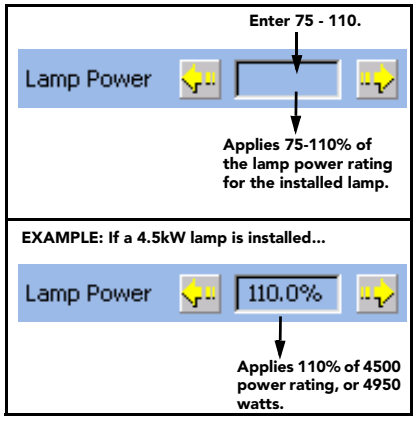

Figure 3-49 Lamp Power Values

Table 3.23 Lamp Current Ranges

CXL/CDXL Lamps (kW)	Current Range (amps)
CXL*/CDXL-20 (2.0)	60-85
CXL/CDXL-30 (3.0)	90-120
CXL/CDXL-45 (4.5)	95-155
CXL/CDXL-60 (6.0)	105-165
CDXL-60SD (6.0)	105-170

***** *CXL-20 requires adaptor kit (P/N 003-001728-XX)*. **NOTE:** *A Lamp Power setting of 110 will exceed the maximum values shown here by approx. 10%.*

3.8.4 Adjusting Lamp Position for LampLOC™

Align a newly-installed lamp as soon as possible to ensure optimized lamp performance and peak brightness at the screen for the life of the lamp.

NOTES: 1) *Before adjusting, a 10-minute warm-up is recommended.* **2)** *You can adjust lamp position either before or after adjustment of Lamp Power or LiteLOC™.* **3)** *Footlambert calibration should be performed with lamp change, i.e. 2K to 3K.*

Use the Do Auto Button for LampLOC™

For best results in all installations, align the lamp by pressing the **Do Auto** button in the **Advanced: Lamp** menu. The motors and sensors in the projector will work together to precisely position the lamp for optimized performance and brightness, utilizing filtering to eliminate signs of lamp flicker. Once aligned, this LampLOC™ setting can be considered fairly stable for the life of the lamp.

When to Use the Individual LampLOC™ Buttons

The individual LampLOC™ arrow buttons, each of which moves the lamp in one direction only, are provided as a reassuring back-up should the **Do Auto** button fail or if you feel a manual, operator-assisted lamp optimization will result in more output. Either measure your results with a light meter at the lens and screen or simply watch the light output gauge in the **Advanced: Lamp** menu. Note that with these buttons you may attain a slightly higher peak than with the **Do Auto** button, but the peak may not be centered on the lamp curve and lamp performance may not be optimized (whereas the **Do Auto** button also utilizes filtering to eliminate the effects of any lamp flicker). In general, use the individual buttons only when you feel it is unavoidable.

HOW TO ADJUST (IF USING A LIGHT METER):

First obtain peak readings on a light meter centered in front of the lens, then at the center of the screen. For each button, continue in one direction, then back up when reading begins decreasing.

NOTES: **1)** *Display a 100% white internal test pattern.* **2)** *Use a tripod to center the light meter with the lens. Distance from the lens does not matter. You may need an attenuator, or wish to construct an internal foil aperture first.* **3)** *This is an optional procedure-use the light output gauge in the* **Advanced: Lamp** *menu if preferred.*

1. Adjust forward/aft (z) until the brightness reading in front of the lens is maximized.
2. Adjust left/right (x) and up/down (y) until the brightness reading in front of the lens is maximized.
3. Re-adjust forward/aft (z) as necessary.
4. Repeat Steps 1-3 as necessary.
5. Repeat Steps 1-4, but reading at the screen instead of at the lens.
6. Reset Lamp Power or LiteLOC™ if desired.

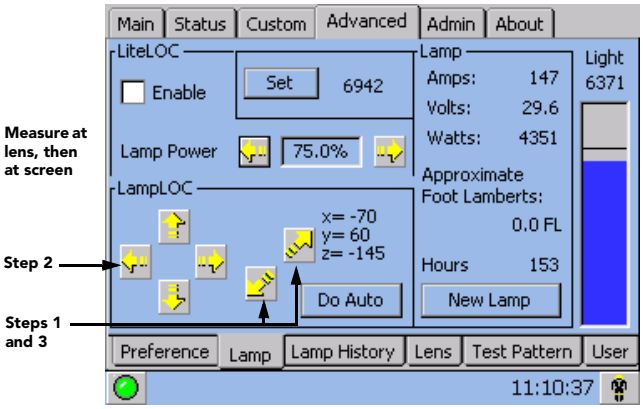

Figure 3-50 Adjusting Using a Light Meter

3.8.5 Stand-by Mode

Close the douser (shutter) to put the projector in a cooler stand-by mode where lamp power is reduced to 50% of its maximum rating. Upon opening the douser and restoring the image, the lamp power will return to its previous setting.

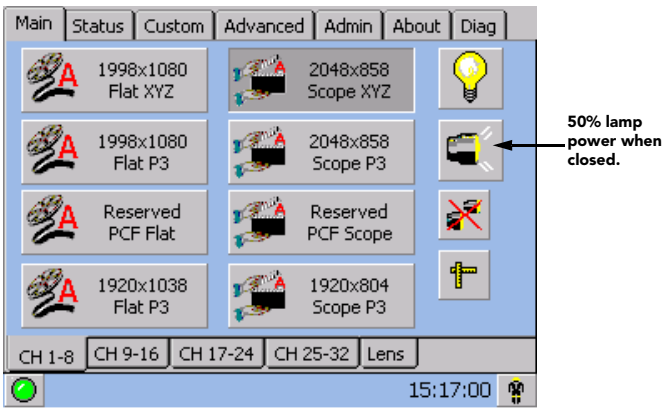

Figure 3-51 Lamp Power in Stand-by Mode

3.8.6 How Old is My Lamp?

When a new lamp is installed and its serial number recorded (**Advanced: Lamp** menu), the lamp timer resets to **0** and begins logging time for the new lamp. This total appears in both the Advanced: Lamp menu and the Status menu. See right.

The Status menu also shows **Total Lamp Hours**, which is the accumulated time logged for all lamps installed thus far. Each past lamp log also appears in the **Advanced: Lamp** History menu.

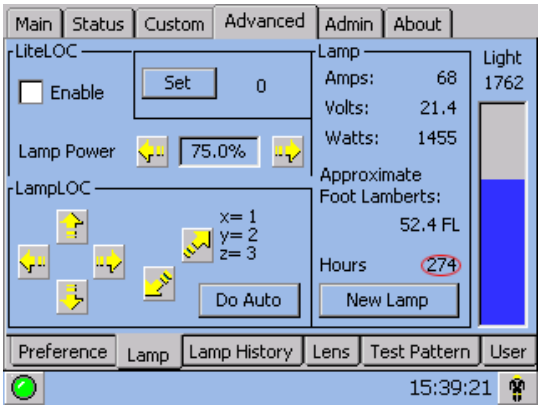

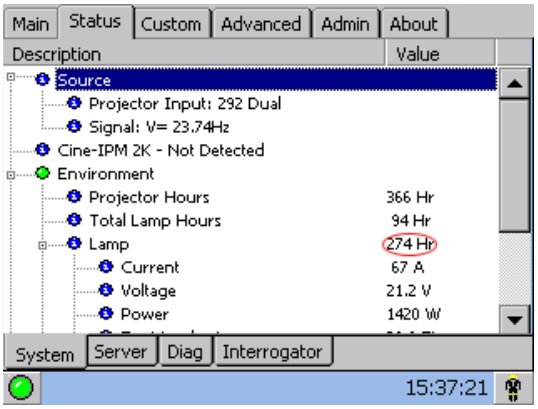

Figure 3-52 Lamp Hours

3.8.7 When to Replace the Lamp

Assuming the Lamp Expiry Message checkbox has been enabled in the **Advanced: Preferences** menu (recommended), an expiry message will appear on the TPC (as an alarm window) when the lamp has reached its defined Lamp Limit and should be replaced.

Lamps should also be replaced when one of the following events occur:

- Lamps are no longer able to maintain SMPTE specified light levels
- Image quality is compromised by excessive flicker
- Lamp hours have exceeded expected average life

Regardless of the Lamp Limit chosen, never exceed the lamp lifetime by the hours shown in **Table 3.24**, as an old lamp becomes increasingly fragile and more prone to sudden failure or even explosion, which can be damaging and dangerous.

Table 3.24 When to Replace Your Lamp

Lamp (kW)	Replace BEFORE:
2.0	3500 hours
3.0	2500 hours
4.5	900 hours
6.0	1000 hours
6.0SD	700 hours

NOTE: *Hours shown here are **greater than or equal to** the pro-rated credit warrantied lifetimes (refer to Section 8 Specifications). **Do not exceed.***

Refer to *Section 6.4 Replacing the Lamp & Filter* for instructions.

3.8.8 Maintaining Footlamberts

Over time, as the theatre screen ages and dust and dirt collects on the port window, the theatre may no longer be achieving the expected footlamberts as reported by the TPC. It is a good idea to periodically recalibrate footlamberts (refer back to **Figure 3-36**).

3.9 Working with the Lens

The ***CP2000-SB*** lens mount secures the primary zoom lens to the projection head. It provides 1) setup adjustments for correct boresight, and 2) automatically controlled focus, zoom and offsets for general use. To save the focus, offset and zoom settings to the channel, you must make the adjustments using the motorized lens mount adjustment features in the **Main: Lens** menu or **Custom: Lens** menu from the TPC. Using the knobs on the lens mount to adjust each position does not save the settings to the channel. They are designed for temporary use and will therefore be lost once the channel changes.
NOTE: *After any manual adjustment, click **Lens Reset** in the **Advanced: Lens** menu to ensure ILS settings are properly recalled.*

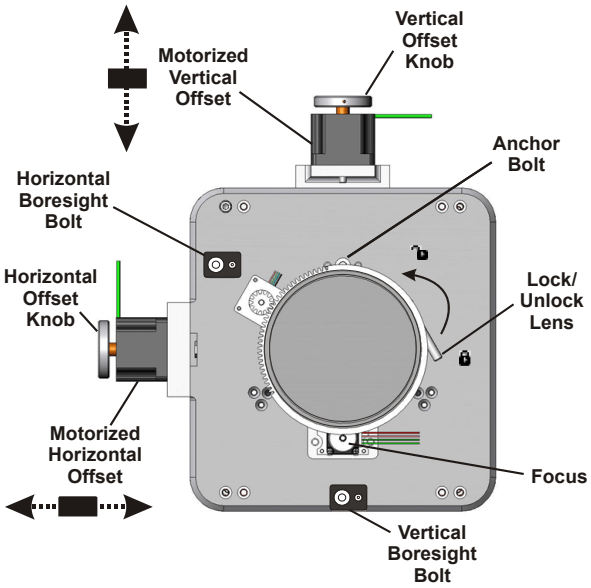

Figure 3-53 Anatomy of the Lens Mount

An optional auxiliary lens (1.25x or 1.26x) can be installed into an optional auxiliary lens mount, then swung into place in front of the primary lens to widen a squeezed image into a properly proportioned scope anamorphic cinema display. It is typically used in theatres having side masks that are retracted for scope images, or in theatres having fixed side masking but a very short throw ratio (throw ratio= throw distance/screen width). To move the auxiliary lens, select the Anamorphic Lens button on the **Main** menu of the TPC. Refer to *Section 2.8 Offset and Boresight Alignment* for all lens installation and boresight instructions. Refer to *Section Custom: Lens Menu, on page 3-26* for ILS and channel setup.

3.9.1 Lens Mount Functions

⚠ WARNING 1) If the Motorized Auxiliary Lens Mount (MALM) is present, ensure to move the MALM to the OUT position before performing any lens calibrate or reset functions on the Motorized Primary Lens Mount to prevent collision between the projection lens and the MALM. 2) Hazardous moving parts. Keep fingers and other body parts away.

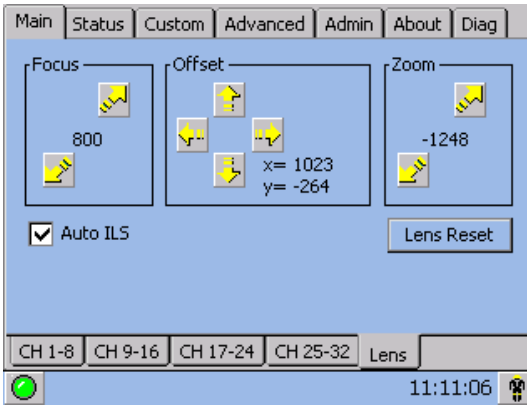

Figure 3-54 Intelligent Lens System

NOTES: 1) *Projector must be fully assembled and powered up in its final location.* **2)** *Keep clear of rotating parts. Remotely operated motors may start to spin without warning.* **3)** *Avoid long hair, jewelry, and loose clothing exposure to the knobs during manual adjustment.* **4)** *In case of emergency, unplug the line cord to immediately halt movement of the lens mount.* **5)** *When adjusting the Focus, Offset, and Zoom, you may experience a slight delay in the response rate of the lens upon selecting the buttons.*

Zoom

From the **Main: Lens** menu, click the zoom in/out buttons to enlarge or shrink the image in each direction as necessary.

Offsets

From the **Main: Lens** menu, click the up/down/left/right buttons as necessary to adjust the image and make it square on the screen. For best results, avoid extreme tilts or offsets. Corner vignettes on a white test pattern indicates extreme offset that should be avoided. If you need more vertical offset range, it is possible that the projector's mechanical TILT should be changed to help compensate for significant differences in screen and lens height.

Focus

From the **Main: Lens** menu, click the focus buttons as necessary for overall focus improvements. For best results, use a crosshatch test pattern or similar, and focus on the center of the image.

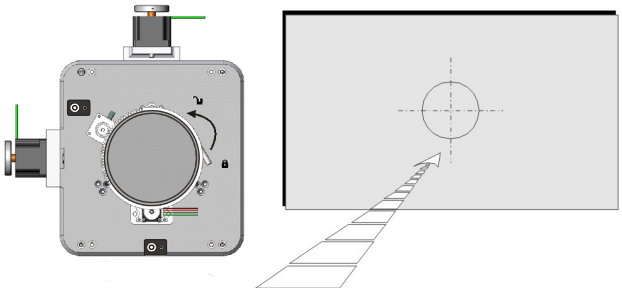

Figure 3-55 Focus Center of Image

If the focus quality differs from edge-to-edge (whether top, bottom, left or right), the boresight of the lens mount likely needs correction. Refer to *Section 2.8 Offset and Boresight Alignment*.

3.9.2 Auxiliary Lens

NOTES: 1) *The auxiliary lens and its motorized mounting mechanism are optional.* **2)** *To install, replace or use the auxiliary lens, refer to the instructions included with the* ***Motorized Auxiliary Lens Mount*** *kit.*

To widen a squeezed image into a scope (2.39:1) theatre display, swing the 1.25x anamorphic or 1.26x wide converter lens into place in front of the primary zoom lens of the projector. This lens increases magnification across the width only, regaining the original proportions in the image, and is often used in theatres where side masking can be moved aside.

3.10 Working with 3D

A single projector can display 3D images as described below. Such images require a 3D-capable source as well as additional hardware and cabling in order to be displayed and interpreted correctly in a typical stereo 3D viewing environment.

3.10.1 3D Description

In simple terms, images generated from a 3D-cinema source consist of a series of images (frames or fields) that alternate quickly between two slightly different viewpoints corresponding to the physical separation of our left and right eyes (called *parallax*). When these frames are displayed with enough speed and viewed with special glasses synchronized with the left/right (L/R) frame sequencing, the resulting “single” perceived image appears with much the same depth and perspective we sense in the real world. The new full resolution triple flash hardware (Brilliant3D) includes an FPGA Formatter Interface Board (FFIB) which allows for full 2K resolution using a 6:2 frame rate multiplication (Triple Flash). Triple Flash 3D is reference to a frame rate that is of a high enough frequency to eliminate flicker as noticeable by the eye. The standard frame rate for most 2D D-Cinema content is 24 frames per second (FPS) as it is for film. For 3D, the server splits the 3D content (video signal) into 2 interleaved signals of 24 FPS each by the server, for a total of 48 FPS input into the projector. The projector’s frame rate multiplication is set to 6:2, meaning the input frame rate is multiplied by 3 (Triple) for a total frame rate of 144 frames per second (Hz or FPS).

3.10.2 What Do I Need for 3D?

The ***CP2000-SB*** requires a 3D-capable SMPTE source and a few special hardware/software setups described here. Essentially you will connect two signals (one left eye, one right eye) to the projector, then use the TPC's **Custom: 3D Control** menu options to define and control the signal processing, synchronizing and output for devices used in your stereographic 3D display. These settings ensures critical ordering and timing of the incoming L/R frames so that they merge correctly into a convincing artifact-free 3D display without cross-talk, ghosting or other artifacts.

System Requirements

- ***CP2000-SB*** projector. Includes all standard 3D components:
  - FFIB (*FPGA Formatter Interface Board*):
  - TPC software v2.3c or higher
  - Main projector software v8.0 or higher
- Two HD-SDI cinema signals (left and right) connected to the projector's SMPTE ports A and B.

NOTE: *Use of a single input consisting of both left and right data is not currently supported.*

- Sync Output Device:
  - IR emitter for controlling the L/R gating (switching) of active glasses

OR

  - Pi-Cell polarizer for controlling a screen that has a silver polarization-preserving surface for use with passive glasses
- Custom 3D Sync Output Cable (GPIO) such as available from *RealD*:
  - For routing the projector's output sync to your Sync Output Device-connect from the projector's GPIO *(Accessed from within the pedestal-refer to Section 2 Installation & Setup) to the emitter or polarizer.*

NOTE: *Refer to Appendix D: GPIO System Integration for GPIO pinouts and other 3D sync cable details.*

- Power supply for your Sync Output Device, typically wired with the custom GPIO cable.
- Proper 3D configuration defined in the TPC's **Custom: 3D Control** menu. For best results, use the 3D internal test pattern shown in **Figure 3-58**.

3.10.3 Supported Hardware Setup

Figure 3-56 shows the general hardware configuration currently supported. Use either an IR emitter to control gating in active glasses, or a polarizing cell and Z-screen with passive glasses.

NOTES: 1) *All configurations require a custom 3D Sync Cable, such as supplied by RealD, for the GPIO port.* **2)** *A pull-up power supply (not shown) is also required for the IR emitter or polarizing cell.* **3)** *See D.1 The GPIO Port, on page D-2 for cabling details.*

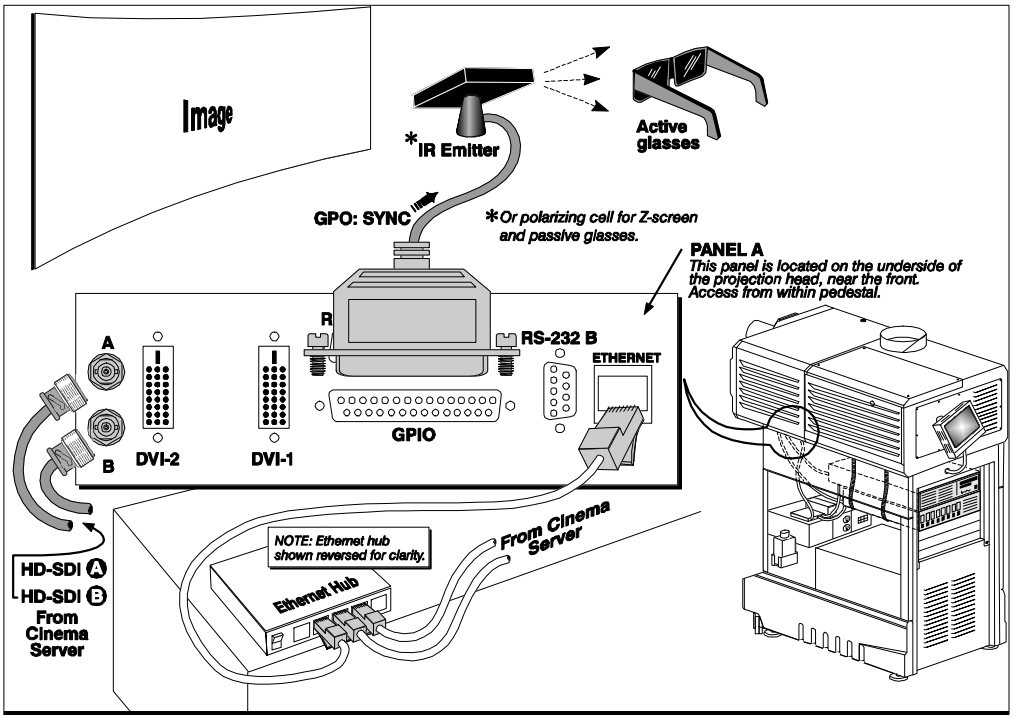

Figure 3-56 Typical Dual-Input 3D System (CP2000 Shown with Active Glasses)

3.10.4 Other Hardware Setups

Other expected hardware configurations with a single 3D source input are shown in **Figure 3-57**.

NOTE: *For future reference. Single 3D input is not currently supported.*

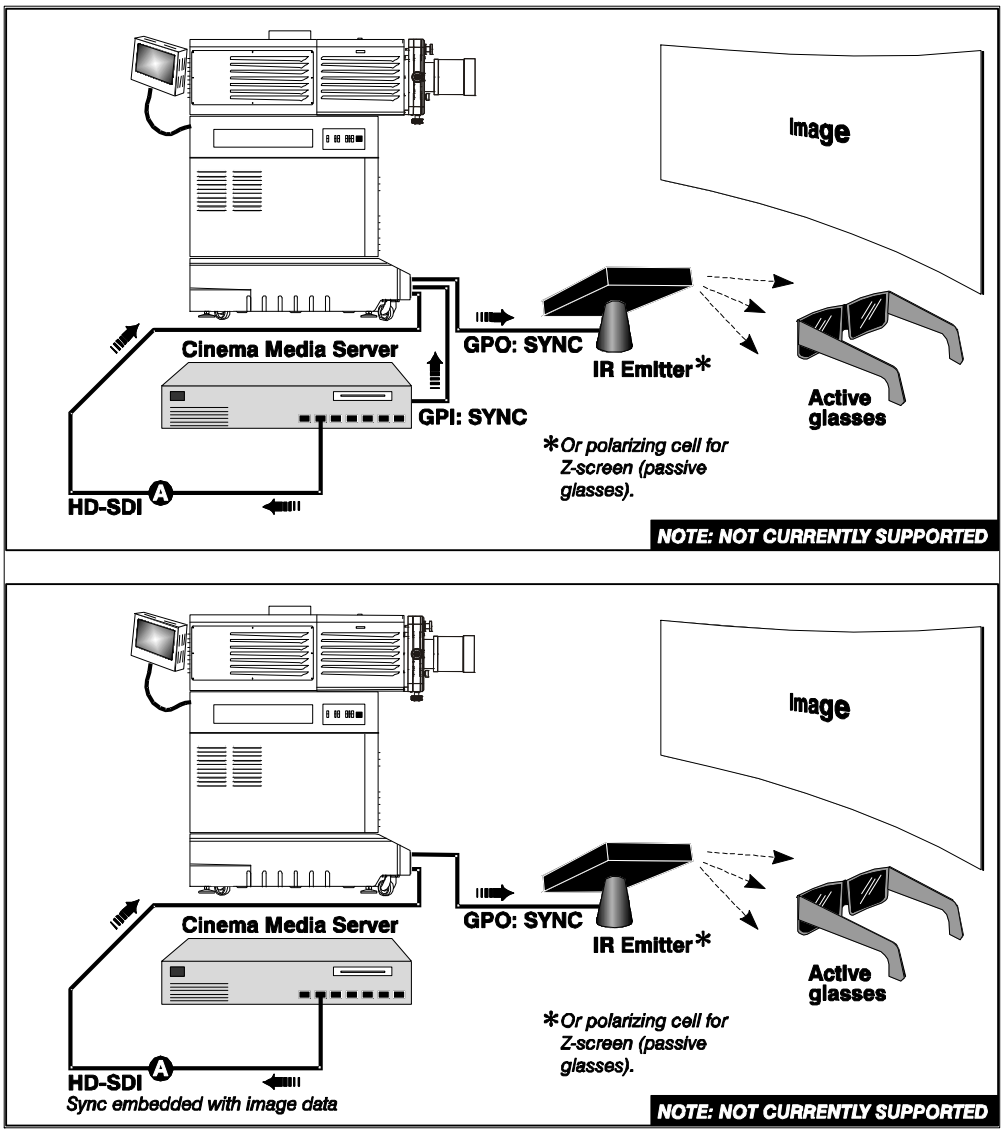

Figure 3-57 Single-Input 3D Systems

3.10.5 3D Instructions

NOTES: 1) *Assumes a full 2048 x 1080 display, and 3D enabled in the* **Custom: 3D Control** *menu.*
2) *3D stereo sync or reference signal is part of input signal, matching the vertical sync.*

Hardware Instructions

1. Connect two HD-SDI signals from a 3D media server to the projector's SMPTE cinema ports **A** and **B**. One carries left-eye data, the other right-eye data. Connect to either port; you will configure the projector to multiply and interleave the L/R signals properly.

Web User Interface Instructions

1. Click **Enable**.
2. **SET THE FRAME RATE:**

   NOTE: *6:2 is commonly used for most 3D features which are comprised of resolutions slightly less than 2048 x 1080.*

   Both incoming frame rates are likely too slow for flicker-free 3D viewing, and need to be increased within the projector for at least 96 Hz output. For example, a typical HD-SDI rate of 24Hz is still only 48 Hz when L/R are combined (see **Figure 3-56**). In the **Custom: 3D Control** menu, set the desired **Frame Rate N:M** ratio-or number of frames displayed per number of frames for complete data. For example, a setting of 6:2 creates 6 frames from 2 inputs (=144 Hz). The resulting frame rate cannot exceed the maximum frame rate possible in the projector-with 24 Hz full-screen incoming signals, use a maximum factor of 5:2.

   NOTE: *Frame rate multiplication less than 6:2 may flicker at slow incoming frame rates.*
3. **DEFINE 3D SYNC INPUT LOCATION:**

   For dual inputs,

   - Set **L/R Input Reference** option to **Active Port: A/B =L/R** or vice versa.
   - Set the **Input GPI** to **None**.

   These two settings tell the rest of your 3D system that incoming 3D stereo sync information is included with the two L/R image data inputs rather than routed separately to the GPIO port.

   For future single-input 3D sources where the server supplies a separate 3D stereo sync to the projector's GPIO port instead, set **Input GPI** according to which input number is used (i.e., according to your GPIO cable wiring).

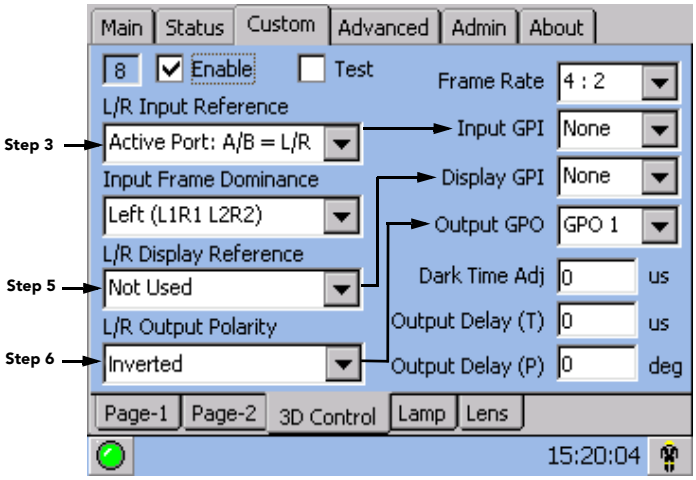

Figure 3-58 Setup for 3D

4. **DEFINE L/R DOMINANCE:**
   For the *Input Frame Dominance*, choose the leading frame, left or right. Correct order depends on the cameras used during filming, and is needed to ensure smooth motions. An incorrect setting creates motion artifacts.
5. **DEFINE SYNC DISPLAY LOCATION:**
   - Set **L/R Display Reference** to **Not Used**.
   - Set **Display GPI** to **None**.

6. **DEFINE SYNC OUTPUT:**
   - Set **L/R Output Polarity** to **Inverted**.

   NOTE: *If the display appears reversed, i.e. background appears close and foreground appears at a distance, you will need to ensure that the cable connecting server output A is connected to projection input A and the cable connecting server output B is connected to projection input B.*

   - Set **Output GPO** according to which of the projector's GPIO outputs is currently wired to your emitter or polarizer.
7. **CONNECT GPIO (OUTPUT):**
   From the projector's GPIO port, connect your 3D stereo sync cable to your 3D controlling device such as an emitter or polarizer. **NOTE:** *RealD 3D sync cable recommended.*
8. **ADJUST DISPLAY, SCREEN, ETC.:**

   As desired, adjust the display, screen, image color, etc**.**

3.10.6 3D Troubleshooting

Using the 3D Test Pattern

Use the 3D internal test pattern to confirm 3D mode, L/R orientation, and your *Sync Output* (GPO) setting only. This pattern automatically activates 3D mode and increases frame rate by a factor of 6:2. **NOTE:** *The test pattern will flicker significantly due to its low frame rate, and is not recommended for synchronizing projector processing with your 3D device.*

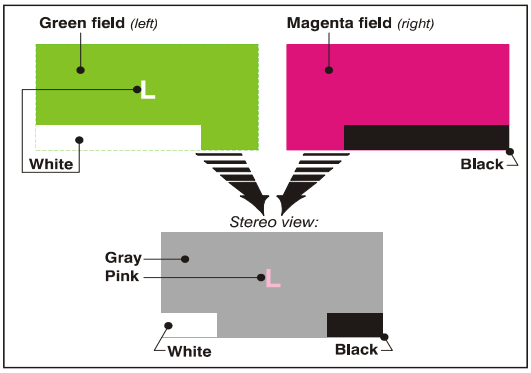

Figure 3-59 Internal Test Pattern for 3D

Image Breakup

Increasing the Dark Time beyond its maximum may cause image break-up.

No 3D Effect

Certain settings in the **Custom: 3D Control** menu are likely reversed.

Ghosting/Cross-Talk

Ghosting or cross-talk indicates that the eyes are detecting portions of the opposing frame due to an out-of-sync system. Adjust **Dark Time** and/or **Output Delay** so that the projector's display output is synchronized with the gating (switching) of your glasses.

Motion Artifacts

If the image seems to jump back and forth during horizontal pans, the **L/R Display Sequence** is likely backwards. Try reversing the current setting.

Single 3D Input Does Not Work

A single source signal containing both left and right data is not currently supported.

3.11 Working with Servers and Diagnostics

NOTE: ***Password-protected****; Installers and service technicians only.*

A service login provides three additional **Status** menus-**Server**, **Diag** and **Interrogator**-for testing certain server functions and communications, or for advanced projector diagnostics.

3.11.1 TPC Status: Server Menu

The **Status: Server** menu provides controls for testing or confirming subtitling and/or metadata commands supplied with presentation content from the site's controlling cinema server. The relevant .xml files-one for subtitling, one for metadata-can be searched and examined for errors in content or in transmission from the server. Reported errors can then help point to potential problems with the server, the .xml file, or the communication link to the projector. Note that controls in the **Server** menu do **not** activate or turn off metadata or subtitling. Controls are diagnostic tools only.

TEST SUBTITLING FILE (.xml):

Enable the **Subtitling** button to test an .xml file supplied with content for control of performance parameters such as synchronization with content, language, font type, font color, position, etc., in the current presentation. Define the desired URI (Uniform Resource Identifier)-i.e., cinema server or distributor-providing the subtitling .xml file you wish to examine, then select **Enable** to begin the test. Any errors encountered in file content or transmission from the server (for example, a lost file, a server crash, loss of communication with the server, etc.) will appear in the window, and the **Enable** checkbox will clear.

TEST METADATA (.xml):

Enable the **Meta File** button to test a supplied .xml file required for auto-configuring display parameters such as colors, aspect ratio, watermarks, etc., in certain distributed content. Such metadata-a.k.a. data about data-is embedded in the video stream content and should be modified only by the distributor, but the test may result in errors pointing to problems in metadata content or its transmission from the server.

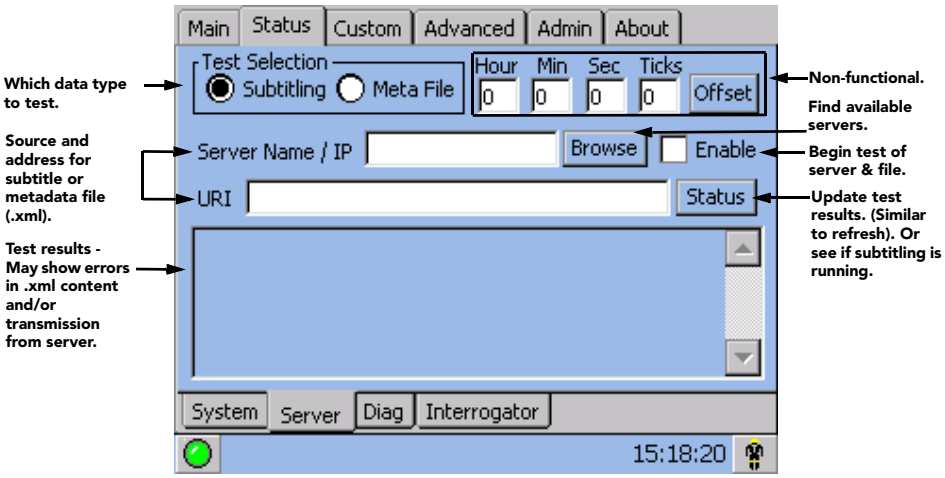

Figure 3-60 Status: Server Menu Options

3.11.2 TPC Status: Diag Menu

The **Status: Diag** menu provides status information about projector components and the current cinema source, and enables log files for each device to be saved to the TPC's storage card for diagnostics.

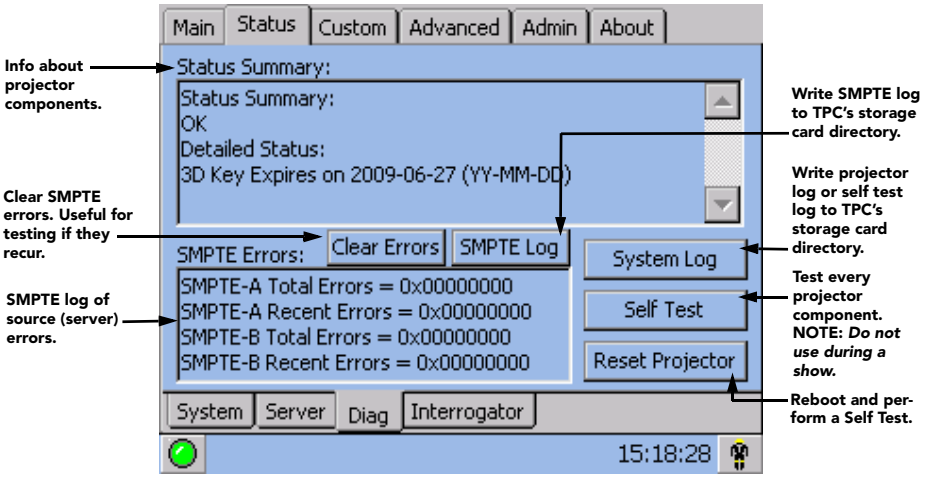

Figure 3-61 Status: Diag Menu Options

3.11.3 TPC Status: Interrogator Menu

The password-protected **Status: Interrogator** screen enables the collection of advanced-level status information that can assist in the diagnostics of projector components. **Interrogator** can be run in two modes and enables the collection of log files only (BASIC MODE) or log files plus registered batch files (ENHANCED MODE). These files are then stored on the TPC's storage card. For **Interrogator** to successfully retrieve these diagnostic files, the projector must remain in its failed state (with incorrectly displayed image on screen).

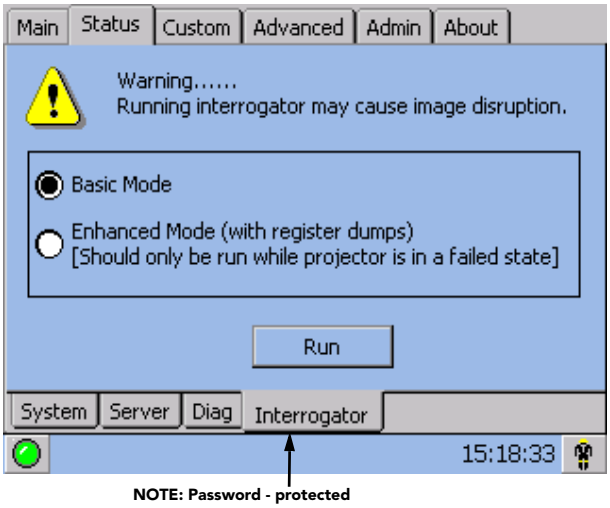

Figure 3-62 Status: Interrogator Menu Options

NOTES: 1) *Always run* **Interrogator** *first before power cycling the projector, otherwise important diagnostic files will be unusable.* **2)** *Never run* **Interrogator** *during a show as this could cause image disruption.* **3) Interrogator** *is also accessible through a separate login and password (different from the service login). Contact Christie tech support for assistance and password.*

4 Cinema Operation

This section explains how trained operators can use the projector for presenting cinema events such as first-run movies stored on a digital media storage device. Please read through these pages before displaying cinema for the first time. A good understanding of all cinema functions and how to access them will help you to run an event smoothly and easily. **NOTE**: *Before attempting cinema use, the projector must be properly installed, aligned and configured by a qualified service technician as described in Section 2 Installation & Setup. Read also Section 3 Operation.*

- *4.1 Compatible Cinema Sources*
- *4.2 Image Formats*
- *4.3 Selecting the Cinema Source*
- *4.4 Adjusting the Cinema Display*

4.1 Compatible Cinema Sources

Ensure a digital media storage device or cinema server is connected to one of the **A** or **B** input ports within the ***CP2000-SB*** head-see **Figure 4-1**. These connections are typically made at the time of projector installation.

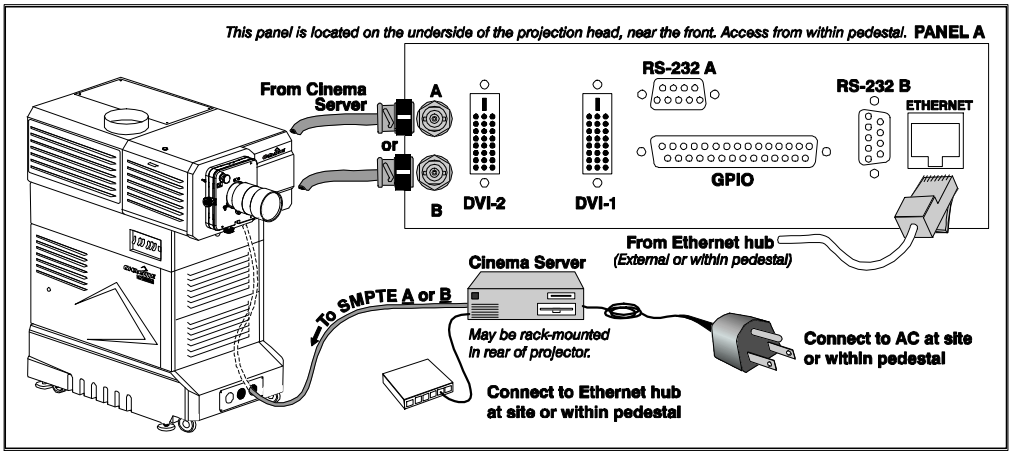

Figure 4-1 Cinema Source Connections (External Source Shown)

The identical **A** or **B** cinema ports use the SMPTE 292M bit-serial interface standard, and will auto-detect cinema source formats shown in **Table 4.1**.

Table 4.1 Compatible Formats for Cinema

Source Standard	Orig. Format	Vert. Freq.	Scan Type	Display Format (Progressive)
SMPTE 274M-1998 (**NOTE**: *Uses 1125 total klines per frame*)				
SMPTE 274	1920 x 1080	60 Hz	* Interlaced	1920 x 1080; 24 Hz
	1920 x 1080	59.94 Hz	* Interlaced	1920 x 1080; 23.98 Hz
	1920 x 1080	50 Hz	** Interlaced	1920 x 1080; 25 Hz
	1920 x 1080	30 Hz	Progressive	1920 x 1080; 30 Hz
	1920 x 1080	29.97 Hz	Progressive	1920 x 1080; 29.97 Hz
	1920 x 1080	25 Hz	Progressive	1920 x 1080; 25 Hz
	1920 x 1080	24 Hz	Progressive	1920 x 1080; 24 Hz
	1920 x 1080	23.98 Hz	Progressive	1920 x 1080; 23.98 Hz
SMPTE RP211-2000				
SMPTE RP 211	1920 x 1080	30 Hz	Prog. Segmented Frame	1920 x 1080; 30 Hz
	1920 x 1080	29.97 Hz	Prog. Segmented Frame	1920 x 1080; 29.97 Hz
	1920 x 1080	25 Hz	Prog. Segmented Frame	1920 x 1080; 25 Hz
	1920 x 1080	24 Hz	Prog. Segmented Frame	1920 x 1080; 24 Hz
	1920 x 1080	23.98 Hz	Prog. Segmented Frame	1920 x 1080; 24 Hz

Source Standard	Orig. Format	Vert. Freq.	Scan Type	Display Format (Progressive)
SMPTE 295M-1997 (**NOTE**: *Uses 1250 total lines per frame*)				
SMPTE 295 M	1920 x 1080	50 Hz	** Interlaced	1920 x 1080; 25 Hz
SMPTE 296M-2001				
SMPTE 296M	1280 x 720	60 Hz	Progressive	*** 1673 x 941; 60 Hz; Progressive
	1280 x 720	59.94 Hz	Progressive	*** 1673 x 941; 59.94 Hz; Progressive
	1280 x 720	50 Hz	Progressive	1920 x 1080; 50 Hz
	1280 x 720	30 Hz	Progressive	1920 x 1080; 30 Hz
	1280 x 720	29.97 Hz	Progressive	1920 x 1080; 29.97 Hz
	1280 x 720	25 Hz	Progressive	1920 x 1080; 25 Hz
	1280 x 720	24 Hz	Progressive	1920 x 1080; 24 Hz
	1280 x 720	23.98 Hz	Progressive	1920 x 1080; 23.98 Hz
SMPTE 260M-1999 (**NOTE**: *This standard does not officially support 60/M)*				
SMPTE 260M	1920 x 1035	60 Hz	* Interlaced	1920 x 1080; 24 Hz
	1920 x 1035	59.94 Hz	* Interlaced	1920 x 1080; 23.98 Hz
SMPTE 372M-2001 DUAL-LINK				
All SMPTE 292m-1998 single-link formats (see above) are available as 12-bit 4: 4: 4 dual link, with the same performance/format				

NOTE: *All sources shown are 10-BIT 4:2:2UNPACKED unless otherwise noted* M = 1.001

* Signal must include 3:2 pull-down encoding and Ancillary Time code information.

* * Signal must include 2:2 pull-down encoding, and assumes field one (1) dominance. Same as Prog. Segmented Frame.

* * * Image will be centered vertically on screen (default).

Keep in mind that the projector will attempt to automatically adapt to any incoming data format that does not exceed either the bandwidth of the system or the frame rate limitations, thus formats beyond those shown above may be compatible.

4.2 Image Formats

The two standard types of cinema displays-flat and scope-differ in their width-to-height aspect ratio as shown below:

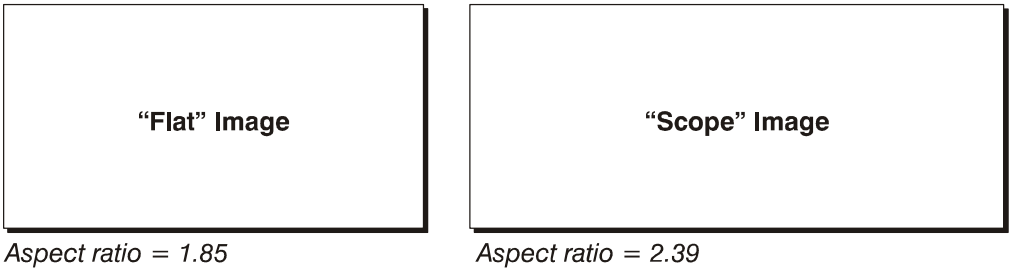

Figure 4-2 Standard Cinema Formats

Achieving either of these displays from a wide variety of incoming source material depends on proper settings in the projector as well as certain theatre conditions.

4.2.1 Projector Variables: Electronic and Auxiliary Resizing

Because the native resolution/format of the CP projector closely matches the flat aspect ratio (the native resolution being only slightly wider, at 1.89), the projector can essentially show incoming flat images through its standard zoom lens. Scope source material, however, is typically squeezed electronically-that is, it is distorted into a narrow image (characterized by unusually thin people!), and then its pixels are stretched horizontally through the auxiliary lens so that the full 2.39 image width appears on screen. The image becomes wider but not taller. See **Figure 4-5**.

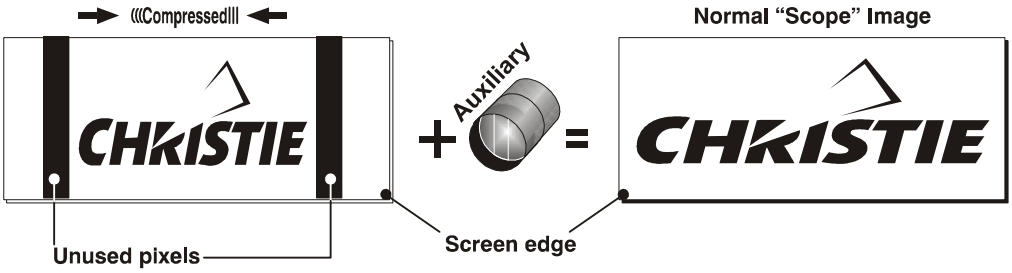

Figure 4-3 Typical Method for Achieving "Scope"

If the incoming material has not been pre-squeezed by the distributor, you can squeeze it by using a source file in which the combined settings for 1) incoming source resolution and 2) desired aspect ratio define the necessary compression. The incoming material will then be squeezed into a narrower area on the projector's DMD panels, with the final aspect ratio setting determining the actual degree of compression. Refer to *Section 3.5 Using the Touch Panel Controller (TPC)* for more information about choosing Source menu settings.

4.2.2 Theatre Variables: Masking

In order to present either type of feature on a single screen, a theatre typically uses masking to conceal any unused edge(s) of the screen. These movable panels or curtains are most commonly installed along the top edge of the screen, changing the height of the screen but not its width. The screen shown in **Figure 4-4** also has a bottom mask.

- Add masks for scope
- Open masks for flat

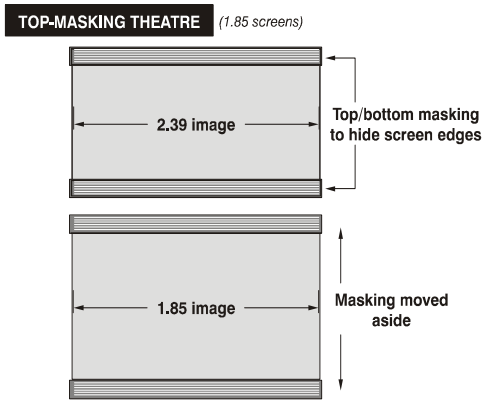

Figure 4-4 Top Masking for Scope

Alternatively, masks may be installed at each side of the screen in order to change the width of the screen but not its height. (**Figure 4-5**)

- Add masks for flat
- Open masks for scope

In some cases, a theatre has both side and top/bottom masking installed. This arrangement is the most flexible of all.

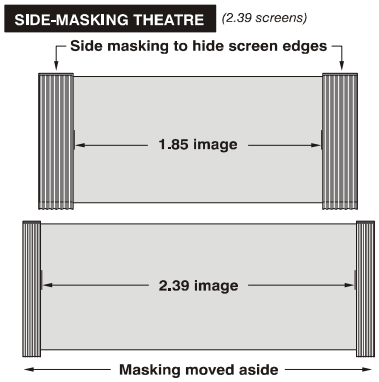

Figure 4-5 Side Masking for Flat

Refer to **Table 4.2** for a summary of the basic factors affecting cinema displays in a variety of theatres.

Table 4.2 Basic Ways to Achieve Flat & Scope Displays

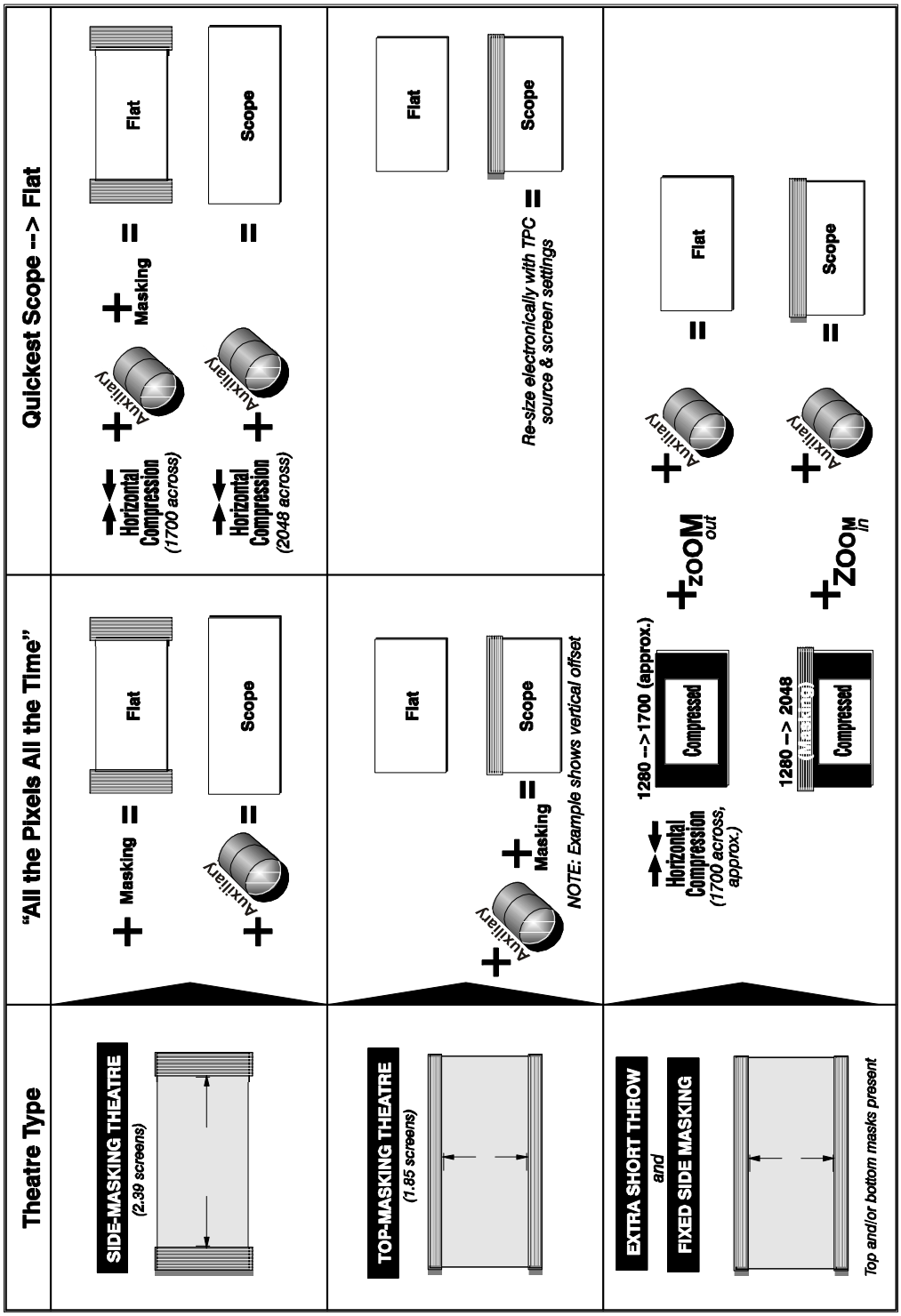

4.3 Selecting the Cinema Source

NOTE: *For details regarding all TPC functions, refer to Section 3.5 Using the Touch Panel Controller (TPC).*

4.3.1 Touch Panel Controller Method

As described in *Section 3.5 Using the Touch Panel Controller (TPC)*, ***CP2000-SB*** displays are usually pre-configured so that any user can correctly display a desired feature simply by selecting the corresponding button on either page of the Main menu displayed by the Touch Panel Controller. There are a maximum of 32 different display buttons available at any one time (8 per page), with most users locked out of other processing controls available in other Touch Panel Controller menus. For cinema sources in particular, which are displayed according to strict parameters pre-defined by the producers of the feature and implemented in the projector by a ***CP2000-SB*** installer, administrator or trained operator, this simplicity ensures that the intended display can be selected quickly and easily by any user.

To change to a new feature, do the following:

- Ensure the ***CP2000-SB*** and TPC are both powered up and operating normally.
- On the *Touch Panel Controller*, select the Main menu tab.
- On the **Main** menu page 1 or 2, press the desired display button-the image will update according to the many display parameters defined for this source.

Refer to *Section 3.5 Using the Touch Panel Controller (TPC)* for other operating details.

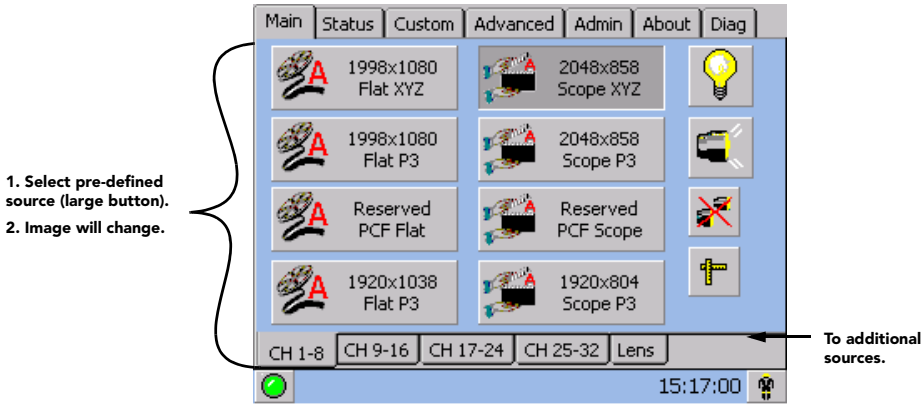

Figure 4-6 Select the Desired Source

NOTES: 1) *Depending on your expected needs, your installer may or may not have configured all buttons for use.* **2)** *Buttons may have any icon or text.*

4.3.2 Other Methods

Depending on your installation, you may be able to use ASCII commands (via Ethernet communication link) to select a source from a different controller in a remote location. Refer to *Section 3.6 Remote Control of the Touch Panel Controller* and *Appendix B: ASCII Messages*.

Regardless of how the display file is selected, the feature will appear on screen according to the numerous specific display settings defined for it. If the display does not appear as expected on screen, part of the display setup is probably not configured correctly for the incoming source. Try a different button on the Main menu. If the image is still incorrect, this source may have to be re-configured.

4.4 Adjusting the Cinema Display

For general users, only the selection of a digital cinema feature is accessible. The precise processing which affects details of image quality is predefined in its display files such as *Source* and *Screen*-these settings are password-protected and accessible by trained operators or installers only.

If you feel the cinema display is incorrect or faulty, contact the trained operator in your theatre who can correct or further customize specific display file settings.

5 Non-Cinema Operation

This section explains how to display alternative content originating from a standard definition or high definition non-cinema source such as a PC or other graphics devices. Such a source routes to a DVI (Digital Visual Interface) port in the ***CP2000-SB*** projection head, and can bypass cinema processing when necessary.

- *5.1 Compatible Non-Cinema Sources*
- *5.2 Selecting the Source*

5.1 Compatible Non-Cinema Sources

Ensure your non-cinema DVI source is connected to **DVI-1** or **DVI-2** within the ***CP2000-SB*** head-see **Figure 5-1**. These connections are typically made at the time of projector installation.

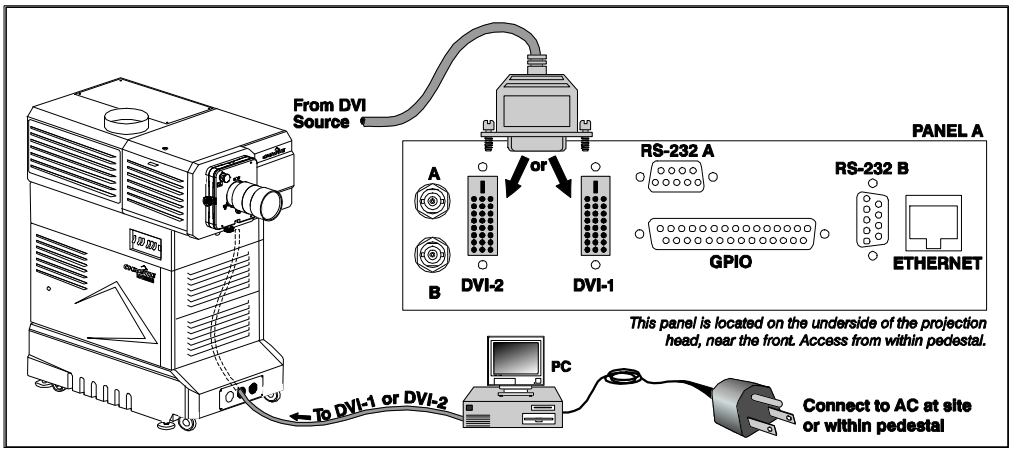

Figure 5-1 Non-Cinema DVI Source Connection (shown with external source)

Each DVI port accepts and will auto-detect the progressive-scan, digital RGB sources listed in **Table 5.1**, displaying them in their original incoming format. Currently, DVI signals cannot be scaled to a different size and/or aspect ratio.

Note that each DVI port is a single-link port for a single-link cable/connector only. Using this pair of ports as a higher-bandwidth dual-link or twin-link pair requires additional hardware and is not currently supported (see **Figure 5-2**).

Table 5.1 Compatible Non-Cinema DVI Sources (All Digital RGB 8-bit)

Incoming Format	Vert. Freq.	Processing Path Required	Display Format
640 x 480 [	60 Hz	Non-cinema	640 x 480
640 x 480[	72 Hz	Non-cinema	640 x 480
800 x 600 [	60 Hz	Non-cinema	800 x 600
800 x 600 [	72 Hz	Non-cinema	800 x 600
1024 x 768 [	60-85 Hz	Non-cinema	1024 x 768
1280 x 1024 [	60-85 Hz	Non-cinema	1280 x 1024
1400 x 1050	60 Hz	Non-cinema	1400 x 1050
1920 x 1080p	23-48 Hz	Cinema	1920 x 1080
1920 x 1080p	23.98-60 Hz	Non-cinema	1920 x 1080
2048 x 1080	23-48 Hz	Cinema	2048 x 1080
2048 x 1080	23-58 Hz	Non-cinema	2048 x 1080
1920 x 1080	23-48 Hz	Cinema	2048 x 1080
1920 x 1080	23-77 Hz	Non-cinema	1920 x 1080
2048 x 1080	23-48 Hz	Cinema	2048 x 1080
2048 x 1080	23-72 Hz	Non-cinema	2048 x 1080

NOTES: 1) *Sources with "[" can be VESA E-EDID reported.* **2)** *Interlaced signals are not supported.* **3)** *The desired processing path for a DVI source is selected in the TPC Advanced Custom menu. Non-cinema processing is required for DVI sources with a pixel clock rate over 110 MHz, which is the limit for cinema processing.*

Keep in mind that the projector will attempt to automatically adapt to any incoming data format that is within the bandwidth or frame rate of the system, thus formats beyond those shown in **Table 5.1** may also be compatible.

5.1.1 Dual- and Twin-Link DVI

Although dual link and twin link input options appear in the TPC Custom menu, using the pair of DVI ports for a dual-link signal-that is, two data streams and one clock via one dual-link cable-requires an adapter that accepts the ***dual***-link DVI connector. Using the ports for a ***twin***-link signal-two data streams with their own clocks, each on their own single-link cable-requires a source that can provide this unique type of DVI output. Either of the proposed configurations would increase DVI bandwidth.

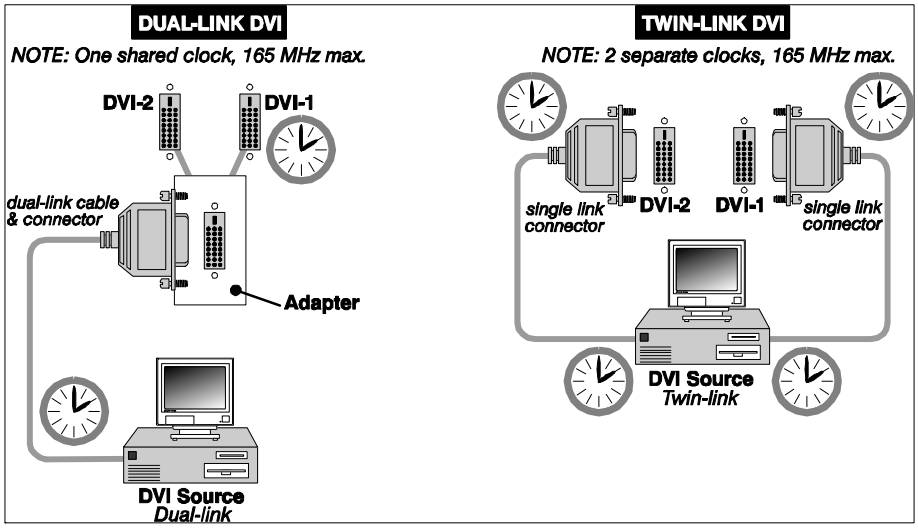

Figure 5-2 Proposed Dual-link and Twin-link DVI Configurations

NOTES: 1) *Neither the Christie dual-link adapter nor the proposed 3rd-party twin-link source (and cables) shown here are currently available.* **2)** *Using both DVI ports with the Christie Cine-IPM 2K enables 10-bit output and displays. Consult the Cine-IPM 2K User Manual for details.*

5.2 Selecting the Source

For any display, the projector interprets incoming signal data according to one of 32 user-selectable *display files* defined at the time of installation (and/or with each subsequent release of a new digital cinema feature), and stored in projector memory. Each file is essentially a collection of processing/display settings optimized for a particular cinema feature or alternative non-cinema content, enabling consistent presentations with minimum further adjustment. Each file is represented by an assigned channel button selectable over several pages of the TPC **Main** menu. Depending on your installation, you may have 0-32 different non-cinema sources defined for use.

TO SELECT A NON-CINEMA SOURCE

With a non-cinema source connected to the ***CP2000-SB***, use the main menu on the *Touch Panel Controller* to select the display button representing the desired non-cinema source. Once selected, the button will darken and the projected display will change according to the corresponding file settings. Refer to *Section 3.5 Using the Touch Panel Controller (TPC)* if you need help.

TO RETURN TO A CINEMA SOURCE

At the Main menu of the Touch Panel Controller, select one of the cinema display buttons pre-configured for a cinema source input at port **A** or **B** -the ***CP2000-SB*** will now ignore the DVI ports and respond to the cinema source activated by this button.

6 Maintenance

This section describes methods for *safely* maintaining the ***CP2000-SB*** projector. **NOTE:** *The illustrations provided are to enhance the understanding of the written material. They are graphical representations only and may not represent your exact projector model.*

- *6.1 Warnings and Guidelines*
- *6.2 Maintaining Proper Cooling*
- *6.3 Maintenance and Cleaning*
- *6.4 Replacing the Lamp & Filter*
- *6.5 Replacing a Lens*

6.1 Warnings and Guidelines

This projector is designed for safe and reliable operation. However safe operation is not assured by design alone; installers, service technicians, trained operators and all other users must maintain a safe environment ***at all times***. Please read through and understand all warnings and precautions before attempting to operate the projector.

6.1.1 Labels and Markings

Observe and follow any warnings and instructions marked on the projector.

The exclamation point within the equilateral triangle indicates related operating/maintenance instructions in the documentation accompanying the projector.

The lightning flash and arrowhead symbol within the equilateral triangle indicates non-insulated dangerous voltage within the projector's enclosure that may be of sufficient magnitude to constitute a risk of electric shock.

6.1.2 General Precautions

Be aware of the following general precautions in all ***CP2000-SB*** installations:

⚠ WARNING 1) Never look directly into the projector lens or at the lamp. The extremely high brightness can cause permanent eye damage. 2) For protection from ultraviolet radiation, keep all projector housings intact during operation. Protective clothing and safety goggles are recommended.

NOTES: 1) *The American Conference of Governmental Industrial Hygienists (ACGIH) recommends occupational UV exposure for an 8-hour day to be less than 0.1 microwatts per square centimeters of effective UV radiation. An evaluation of your workplace is advised to assure employees are not exposed to cumulative radiation levels exceeding the government guidelines for your area.* **2)** *Be aware that some medications are known to increase one's sensitivity to UV radiation.*

⚠ WARNING 1) FIRE HAZARD. Keep hands, clothes, and all combustible material away from the concentrated light beam of the lamp. 2) Position all cables where they cannot contact hot surfaces or be pulled or tripped over.

This projector must be installed on the floor only, and operated in an environment which meets the operating range specifications in *Section 8 Specifications*. **Warning!** *Opening or removing a projector cover requires a qualified service technician.*

6.1.3 AC/Power Precautions

Installation of this projector requires that an electrician hard-wire a 3-phase (Y) feed ***and*** a separate 15A single-phase feed from the pedestal toe to the AC supply in your building. You must also use only the correct pedestal for your geographic area as stated in *Section 1.2.2 Software Requirements*.

Operate the projector at the specified voltage. **Warning!** *Do not attempt operation if the AC supply and pedestal are not within the specified voltage range.*

Do not allow anything to rest on the power cord. Locate the projector where the cord cannot be abused by persons walking on it or objects rolling over it. Never operate the projector if the power cable appears damaged in any way. Do not overload power outlets and extension cords as this can result in fire or shock hazards.

NOTE: *Only qualified service technicians are permitted to open any enclosure on the product, and only if AC has been fully disconnected at BOTH wall breakers.* **Warning!** *SHOCK HAZARD. Disconnect from AC before opening any enclosure. Disconnect at BOTH wall breakers.*

6.1.4 Lamp Precautions

Any Xenon arc lamp used in the ***CP2000-SB*** is under high pressure and must be handled with great care at all times. Lamps may explode if dropped or mishandled.

WEAR PROTECTIVE CLOTHING:

Never open the lamp door unless you are wearing authorized protective clothing such as that included in a *Christie Protective Clothing Safety Kit P/N 598900-095*. Recommended protective clothing includes-but may not be limited to-protective gloves, latex lab gloves, double-layer 0.040" acetate face shield, and a quilted ballistic nylon jacket or a welder's jacket. **Warning! 1)** *EXPLOSION HAZARD -Wear authorized protective clothing whenever the lamp door is open!* **2)** *Never attempt to remove the lamp directly after use. The lamp is under increased pressure when hot and may explode, causing personal injury and/or property damage. Allow to cool completely.*

NOTES: 1) *Christie's protective clothing recommendations are subject to change.* **2)** *Any local or federal specifications take precedence over Christie recommendations.*

COOL THE LAMP COMPLETELY:

The arc lamp operates at a very high pressure that increases with temperature. Failure to allow the lamp to sufficiently cool prior to handling increases the potential for an explosion causing personal injury and/or property damage. After turning the lamp OFF, it is crucial that you wait ***at least 10 minutes*** before turning off the rest of the projector breakers, disconnecting AC and opening the lamp door. This provides enough time for the internal lamp cooling fans to properly cool the lamp. Cool ***completely*** before handling. Again, ***always*** wear protective clothing! **Warning! 1)** *Never attempt to access the lamp while the lamp is on. Wait at least 10 min. after lamp shut-off before powering down, disconnecting from AC and opening the lamp door.* **2)** *SHOCK HAZARD. Disconnect from AC at BOTH wall breakers before opening the lamphouse.* For all other precautions critical for safe removal and replacement of the lamp, refer to *Section 6.4 Replacing the Lamp & Filter.*

6.2 Maintaining Proper Cooling

The ***CP2000-SB*** high-intensity lamp and electronics rely on a variety of cooling components to reduce internal operating temperatures. Regular checking and maintenance of the entire cooling system is critical to prevent overheating and sudden projector failure, and helps to ensure reliable operation of all projector components over time.

6.2.1 Ventilation

Vents and louvers in the projector covers provide ventilation, both for intake and exhaust. Never block or cover these openings. Do not install the projector near a radiator or heat register, or within an enclosure.

6.2.2 Air Filter

It is recommended that you replace the air filter (located near the lens corner of the projection head) whenever you replace the lamp-or sooner, in dusty or dirty environments. A clogged filter reduces air flow, and can lead to overheating and failure of the projector. ***Check monthly***. Refer to *Section 6.4 Replacing the Lamp & Filter* for instructions. It is also recommended that you visually check the laminar airflow device (LAD) just beyond the filter opening. The LAD should be nearly white or light gray in color.

6.2.3 Liquid Cooler

The liquid cooler system circulates liquid to and from the DMDs in the ***CP2000-SB*** projection head, reducing their operating temperature to an acceptable level. Periodically check the coolant level visible through the gauge/window on the non-operator's side of the pedestal, and make sure that it remains between the two notches (preferably closer to the top notch).

If the liquid cooling system should fail, it will trigger an over-temperature alarm window.

FILLING THE COOLER:

The cooler should require filling only upon projector installation (refer to *Section 2.1 Assembly and Connection of Components*). Fill with Christie approved coolant Jeffcool E105 provided in the liquid coolant fill service kit (P/N 003-001837-02). **Danger!** *HAZARDOUS SUBSTANCE - The coolant used in this product contains ethylene glycol. Use caution when handling. Do not ingest.* Top up as necessary, watching the gauge closely.

Important! *Whenever coolant has been added or replaced, check for a possible airlock upon the next projector power-up. Refer back to* **Figure 2-33 Check Hose for Airlock problem, on page 2-21**.

NOTE: *Refer to Section 3.1 Projector Basics for all cooler operating details.*

6.2.4 Exhaust Duct & Lamp Fan Interlocks

Check/maintain both vane switches-one in the exhaust duct and one near the lamp fan-at least every 6 months. Check operation as follows:

1. Turn projector ON (lamp is not needed).
2. Turn extractor fan OFF.
3. Confirm that the TPC displays an alarm window indicating that the extractor fan vane switch has failed. Turn fan back on to correct.
4. Block air intake at rear corner of projector head on the operator's side.
5. Confirm that the TPC displays an alarm window indicating that the lamp fan vane switch has failed. Clear air intake to correct.

Maintain vane switches as described in *Section 6.3 Maintenance and Cleaning*.

NOTE: *If the exhaust duct becomes significantly blocked-or if a fan fails-the projector's airflow sensor should trigger a shutdown before the projector becomes overheated or unsafe. Regardless,* ***check the airflow periodically****.*

6.3 Maintenance and Cleaning

To help ensure optimized performance and reliability, regularly check electrical, optical and other components as described below. **Warning!** *SHOCK HAZARD. Disconnect from AC at BOTH wall breakers.*

6.3.1 Electrical

Do the following every 60 days or 500 hours (always disconnecting from AC first):

- Check the contact surfaces of positive (anode) and cathode (negative) connections for cleanliness.
- Clean electrical contact surfaces as necessary to prevent contact resistance from scorching connectors.
- Verify that all electrical and lamp connections are tight.

6.3.2 Optical

Unnecessary cleaning of optics can be more harmful than helpful, increasing the risk of degrading delicate coatings and surfaces. In this projector, check only the *lens* and *lamp reflector*-maintenance of other optical components requires a qualified service technician. Check these components periodically in a clean, dust-free environment using a high-intensity light source or flashlight. Clean them ***only*** when dust, dirt, oil or other marks are obvious. Never touch an optical surface with your bare hand-always wear latex lab gloves.

When to Check

LENS:

A small amount of dust or dirt on the lens has minimal effect on image quality-to avoid the risk of scratching the lens, clean the lens ***only*** if absolutely required. See below.

LAMP REFLECTOR:

Inspect the mirror surface (reflector) for cleanliness ***only*** during a lamp replacement, when the lamp is out. If necessary, clean as described below-ensure to ***wear protective clothing*** while inspecting or cleaning. Note that color on the reflector surface may vary-this is normal.

Supplies

For cleaning off dust and/or grease, you will need:

- Soft camel-hair brush
- Dust-free blower-filtered dry nitrogen blown through an anti-static nozzle.
- Dust-free lens tissue such as Melles Griot Kodak tissues (18LAB020), Optowipes (18LAB022) or Kim Wipes or equivalent
- Lens cleaning solution such as Melles Griot Optics Cleaning Fluid 18LAB011 or equivalent. *For lens only*.
- Methanol. *For reflector only*.
- Cotton swabs with wooden stems only
- Lens cleaning cloth/microfibre such as Melles Griot 18LAB024 or equivalent.

Cleaning the Lens

IF DUSTY:

1. Brush most of the dust off with a camel-hair brush and/or blow dust away with compressed air.
2. Fold a microfibre cloth smooth and gently wipe remaining dust particles off the lens. Make sure to wipe evenly with the smooth portion of the cloth that has no folds or creases. Do not apply pressure with your fingers-use the tension in the folded cloth itself to collect the dust.
3. If significant dust is still bound to the surface, dampen a clean microfibre cloth with lens cleaning solution (damp, not dripping). Wipe gently until clean.

IF FINGERPRINTS, SMUDGES, OIL:

1. Brush most of the dust off with a camel-hair brush and/or blow dust away with compressed air.
2. Roll a lens tissue around a swab and soak in lens cleaning solution. Tissue should be damp but not dripping.
3. Gently wipe the surface using a figure-8 motion. Repeat until blemish is removed.

Cleaning the Reflector

IF DUSTY:

1. Brush most of the dust off with a camel-hair brush and/or blow dust away with compressed air.
2. If some dust remains, just leave as is-air circulating at the lamp is unfiltered, so some dust is inevitable. Avoid unnecessary cleaning.

IF FINGERPRINTS, SMUDGES, OIL:

1. First brush dust off with a camel-hair brush and/or blow dust away with compressed air.
2. Fold a clean microfibre cloth and dampen with methanol. Make sure to wipe evenly with the smooth portion of the cloth that has no folds or creases. Do not apply pressure with your fingers-use the solution in the cloth to collect the dirt.

6.3.3 Other Components

In a normal operating environment check, clean and treat the following components every 6 months or so to help ensure proper lamp and projector function:

Lamp Fan

A clogged lamp fan impeller or motor can reduce air flow, leading to possible overheating and failure of the lamp. Clean/treat the impeller as follows:

1. Vacuum loose dirt from the lamp fan impeller.
2. If necessary, use a brush with hot water and suitable detergent.

Important! *Do not bend the impeller blades or loosen the balancing weights.*

Igniter

Clean the high voltage terminal and insulator to remove accumulated dust or dirt.

Air Flow Interlocks

The lamp fan vane switch is located within the lamp cooling compartment. The extractor vane switch is located just inside the top duct on the projector lid. Check and, if necessary, clean the switches to remove accumulated dust or dirt that could impede movement. Within the exhaust duct connected at the top of the projector, adequate airflow must be maintained and routed to outside of the building. Inspect regularly and confirm that 1) there are no obstructions or kinks within the ducting, 2) all air *intake* areas of the ***CP2000-SB*** are unobstructed, and 3) exhaust airflow is within the range shown in **Table 2.1 on page 11**. Ensure lamp wiring does not interfere with vane switch. Refer to *Section 6.2 Maintaining Proper Cooling*.

Laminar Airflow Device (LAD)

Whenever checking/replacing the air filter on the side of the projector, also visually check the small square laminar airflow device (LAD) just beyond the filter opening. The LAD should be nearly white in color-if very dark (rare), it may have to be replaced by a qualified service technician. Contact Christie or your dealer.

6.4 Replacing the Lamp & Filter

The high brightness of your projector is provided by a Xenon lamp mounted at two ends within a reflector and housed in the locked lamp compartment of the projection head. When the lamp approaches the end of its life, it must be replaced-do not exceed warranted lamp life by more than 20%, as an old lamp becomes increasingly and dangerously fragile, resulting in possible explosion.

To determine the age of your current lamp, consult the **Status** menu in the *Touch Panel Controller*. Lamp hours appear under **Environment: Lamp**. Lamp hours are also displayed in the password-protected **Advanced: Lamp** menu and the **Advanced: Lamp History** menu.

It is recommended that you replace the air filter with every lamp replacement, or sooner in dusty or dirty environments. Check its condition monthly in all projectors.

6.4.1 Lamp Replacement Procedure

NOTE: *For this procedure you will need a compatible Christie Xenon CDXL or CXL lamp as shown in Section 8 Specifications-never install a lamp intended for a different model or projector.* **Warning! 1)** *Make sure to use the correct wattage lamp supplied by Christie.* **2)** *Lamp replacement is to be done by a qualified service technician only.* **3)** *EXPLOSION HAZARD - Wear authorized protective clothing whenever the lamp door is open! Never apply a twisting or bending force to the quartz lamp body.*

Before You Begin

Read and follow all other general lamp precautions in *Section 6.1 Warnings and Guidelines*.

STEP 1: Turn Off Main AC

a. Allow the fans to run at least 10 minutes for cooling.

b. At the breaker panel on the projector, set the 3-phase **MAIN AC** circuit breaker to **OFF**.

Warning! *Never attempt to remove the lamp when it is hot. The lamp is under great pressure when hot and may explode, causing personal injury and/or property damage. Allow to cool completely.*

STEP 2: Turn Off Remaining Circuit Breakers

After allowing the fans to run for at least 10 minutes, turn OFF the remaining **INTERNAL** and **PROJECTOR** circuit breakers located on the breaker panel of the projector.

STEP 3: Disconnect Projector from AC Supply

⚠ WARNING SHOCK HAZARD. Disconnect from all AC at ALL wall breakers.

STEP 4: Open the Lamp Door

With protective clothing and shield on, unlock the lamp door and open it. Refer to **Figure 2-5 Open Projector for Access, on page 2-5**. If desired, release the latch mechanism to remove the door entirely.

STEP 5: Open Cooling Compartment

Turn knob to open the inner lamp cooling compartment and reveal the cathode end (-) of the lamp.

STEP 6: Remove the Old Lamp and Inspect Reflector

a. Loosen set screws from negative/cathode (rear, 7/64") and positive/anode (front, 3/16") lamp connectors. These screws are shown in **Figure 6-2**. **NOTE**: *Be sure to apply minimal torque and DO NOT STRESS the quartz tube*.

b. Carefully slip the positive anode connector off the front of the lamp.

c. Handle the ***cathode end only***. Unscrew the lamp from the rear connector and carefully remove it from the projector. ***Immediately*** place the lamp inside the protective cover (saved from previous installation) and then seal it in a heavy carton on the floor where it cannot fall or be bumped. **Warning!** *Handle box with extreme caution. The lamp is hazardous even when packaged. Dispose of lamp box according to safety regulations for your area.*

d. With the lamp removed, visually inspect the reflector for dust. Clean if necessary as described in *Section 6.3 Maintenance and Cleaning*.

STEP 7: Remove New Lamp from Protective Cover

a. Remove tape, knurled nut and locking star washer (if present) securing the lamp within its cover.

b. Handling at the ends only, extract the lamp from the cover. Set aside the protective cover for re-use in your next lamp disposal or for warranty return of an expired lamp.

STEP 8: Install New Lamp

a. ***With protective clothing and shield on***, install the new lamp by inserting the threaded cathode (-) end of the lamp into the negative lamp connector nut located in the rear of the lamp compartment and screw in fully (**Figure 6-1**, left). Hand-tighten only. **Caution!** *Handle by the cathode/anode end shafts only, never the glass. Do not over-tighten. Do not stress the glass.*

b. Rest the anode (+) end of the lamp on the lamp cradle (**Figure 6-1**) and slip the positive lamp connector over the bulb end.

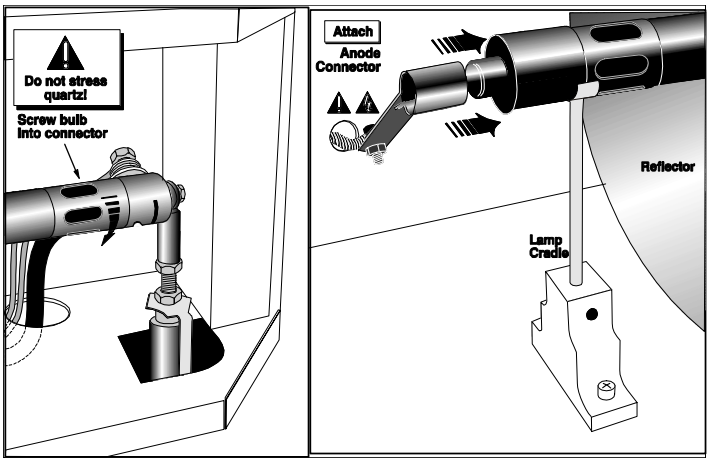

Figure 6-1 Install Bulb

c. Hand-tighten set screws in both negative and positive lamp connectors (**Figure 6-2**). **Important!** *Proper electrical contact prevents resistance in the lamp connectors.* If you accidentally touch the quartz body of the lamp with your bare hands, clean it as described in *Section 6.3 Maintenance and Cleaning*.

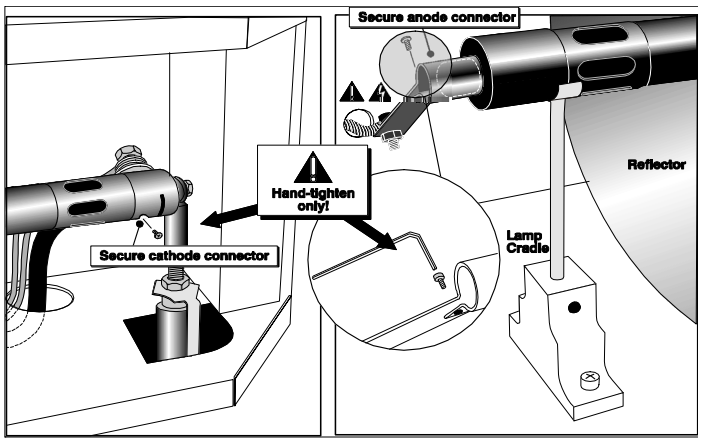

Figure 6-2 Secure bulb at cathode (-) and anode (+) connectors

STEP 9: Check Leads

Ensure that the anode (+) lead between lamp and igniter is well away from any projector metal such as the reflector or firewall. **Warning!** *Leads too close to metal parts will cause arcing during starting pulse. This is a SAFETY HAZARD, and the lamp may not ignite.*

STEP 10: Close Cooling Compartment and Lamp Door

The projector will not operate unless the louvered door is locked shut.

STEP 11: Turn Breakers to ON

At the projector's breaker panel, turn all breakers to **ON**.

STEP 12: Set the Proper Lamp Type (Power) and Record the Serial Number of the New Lamp

Important! *Requires access to TPC* **Advanced: Lamp** *menu.*

If your new lamp is larger or smaller than the old lamp, record the new lamp type (2.0, 3.0, 4.5 or 6.0 kW) and serial number before igniting the new lamp. The new lamp type setting establishes the proper range of power available for the installed lamp, ensuring that the new lamp is neither under-powered nor over-driven. **Warning!** *Do not attempt to ignite the lamp until its type is correctly selected in the* ***Advanced: Lamp*** *menu.*

a. In the **Advanced: Lamp** menu, select **New Lamp**.

b. In the **Lamp History** submenu, select the correct lamp type from the **Lamp Type** drop down menu.

c. Enter the serial number and the number of hours logged on the newly installed lamp.

d. Select the reason why the lamp was changed from the **Change Reason** drop down menu.

e. Click **Save** to record the number and to reset the lamp timer. The timer will now begin to log time for the new lamp. **NOTE**: *You cannot edit the line items of recorded lamps, therefore ensure you enter the correct information before clicking* ***Save****.*

STEP 13: Turn the Lamp ON and Adjust the Lamp Position

Press and hold the lamp button on the TPC Main menu. Using the TPC, adjust the lamp position within the projector as described in *Section 3.8.4 Adjusting Lamp Position for LampLOC™*. This ensures maximum performance, with the lamp (bulb) well-centered with the reflector and distanced correctly from the rest of the illumination system.

6.4.2 Filter Replacement Procedure

Replace the air filter whenever the lamp module is replaced, or more frequently if operating the projector in a dusty or dirty environment. ***Check monthly in all cases***. The filter is located on the operator's side of the projection head, near the front. See **Figure 6-3**.

Before You Begin

Read and follow all other general lamp precautions in *Section 6.1 Warnings and Guidelines*.

STEP 1: Turn Off Main AC

a. Allow the fans to run at least 10 minutes for cooling.

b. At the breaker panel on the projector, set the 3-phase **MAIN AC** circuit breaker to OFF. **Warning!** *Never attempt to remove the lamp when it is hot. The lamp is under great pressure when hot and may explode, causing personal injury and/or property damage. Allow to cool completely.*

STEP 2: Turn Off Remaining Circuit Breakers

After allowing the fans to run for at least 10 minutes, turn off the remaining **INTERNAL** and **PROJECTOR** circuit breakers located on the breaker panel of the projector.

STEP 3: Disconnect Projector From AC Supply

⚠ WARNING SHOCK HAZARD. Disconnect from all AC at ALL wall breakers.

STEP 4: Open/Remove Filter Door

Open filter door by loosening 2 corner screws (flat screwdriver), and lift off door (1. and 2. in **Figure 6-3**).

STEP 5: Replace Air Filter

Slide the filter up and discard. Insert the new air filter, following the labeling for proper inside/outside orientation. Slide all the way down into its slot (3. and 4. in **Figure 6-3**). **Warning!** *Use only Christie filters. Never operate the projector without the filter installed.*

STEP 6: Close/Replace Filter Door

With the filter in place, insert the bottom tabs of the filter door into the corresponding slots, close the filter door, and secure with 2 screws (5. and 6. in **Figure 6-3**).

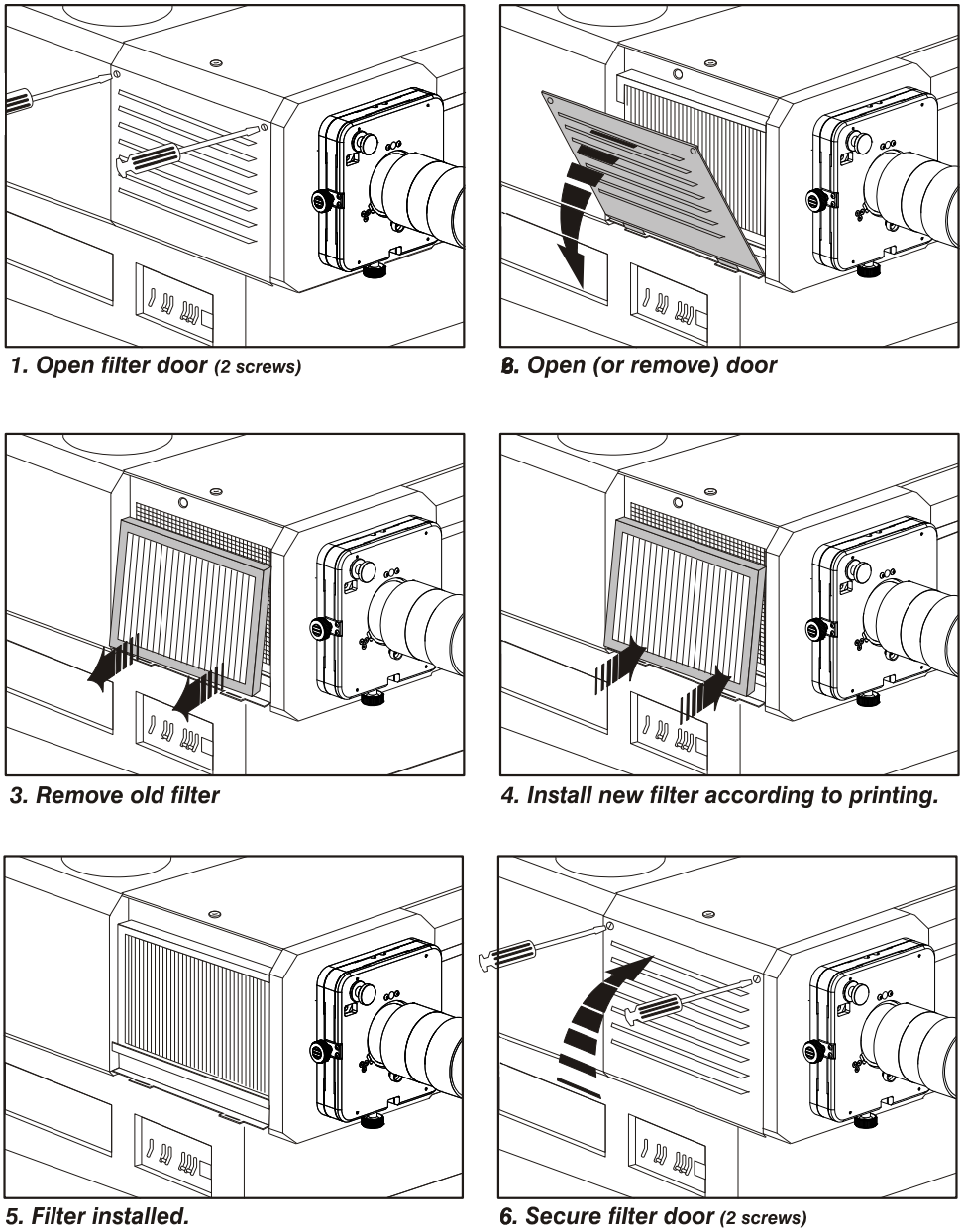

Figure 6-3 Replacing the Air Filter

6.5 Replacing a Lens

A variety of primary lenses can accommodate different throw distances and specific types of installations-see *Section 8 Specifications*. To replace or change a lens:

1. Release the lens locking lever (UP position).
2. Pull out lens and replace with a different primary lens as described in *Section 2.1.3 Lens(es)*.
3. Secure with lens locking lever (down position).
4. Calibrate the lens. See *Section 2.7 Basic Image Alignment* for details.

7 Troubleshooting

If the projector does not appear to be operating properly, note the symptoms present and use the following guide to assist you. If you cannot resolve the problems yourself, contact your dealer for assistance. **NOTE:** *A **qualified service technician** is required when opening an enclosure to diagnose any probable cause.*

- *7.1 Power*
- *7.2 Lamp*
- *7.3 TPC*
- *7.4 Ethernet*
- *7.5 Cinema Displays*
- *7.6 Non-Cinema Displays*

7.1 Power

7.1.1 Projector Will Not Start

1. Check for green Main AC light on projector. If not on, check all breakers on projector and at the wall. There are single-phase and 3-phase breakers.
2. Are the CP breakers staying on when enabled? If they are tripping to OFF position, there is an electrical problem requiring investigation by a certified electrician.

7.2 Lamp

7.2.1 Lamp Does Not Ignite

1. If the lamp button is entirely disabled (not selectable at the TPC **Main** menu, indicated by a red **X** on the lamp button), there is an interlock failure such as an open lamp door, failed lamp fan, etc. A flashing red alarm window also indicates this. Refer back to solutions listed in **Table 3.2 on page 17**.
2. For SSM communication failures, re-boot and try again.
3. If a DMD temperature is too high (DMD over critical temp limit), the lamp will not ignite. Cool the projector and try again.
4. If the **Status** menu indicates a ballast communication problem, re-boot and try again.
5. If the lamp does not ignite after a second try, replace the lamp.
6. If there is no buzzing indicating that the igniter is attempting ignition, there may be a problem with the igniter (Christie service required).
7. If there is a brief buzz attempting ignition but a lamp does not ignite, the lamp likely needs to be replaced.

7.2.2 Lamp Suddenly Goes Off

1. Try increasing the lamp power (TPC **Advanced Lamp** menu).
2. The DMDs in the projection head may be overheated (this also triggers an alarm window at the TPC).
3. An interlock may be interrupting lamp function.
4. Make sure the 220V connection near Panel C at the rear of the projector head (on the underside) is still plugged in.
5. Replace the lamp.

7.2.3 No Lamp Current Reading

With this communication error, the lamp will be powered by the last lamp power setting in effect.

7.2.4 Flicker, Shadows or Dimness

1. LampLOC™ may need re-adjustment.
2. LampLOC™ may be in the middle of its adjustment. Wait approximately 2 min.
3. Increase lamp power, if possible.
4. Determine if it is mid-level grayscale flicker (beating)-adjust 3-phase balancing for minimized ripple (requires qualified service technician).

7.2.5 LampLOC™ Does Not Seem to Work

1. In the TPC **Advanced Lamp** menu, try adjusting lamp position using one button at a time-watch light level for changes indicating lamp movement.
2. If the motors do not respond via any TPC buttons, you can position the lamp manually within the projection head. ***UV danger. Qualified service technician only.***

7.2.6 LiteLOC™ Does Not Seem to Work

1. Ensure LiteLOC™ is set and enabled in the **Advanced: Lamp** menu.
2. Changing the **Lamp Power** setting disables LiteLOC™.
3. If the lamp power has increased to its maximum in order to maintain a LiteLOC™ setting, LiteLOC™ is automatically terminated. If the values shown in the **Advanced: Lamp** menu indicate that the lamp power has reached this over-drive state, either reduce your LiteLOC™ setting or install a new lamp.

7.3 TPC

1. If the TPC fails to initialize, re-boot the projector and try again.
2. A failed TPC usually indicates a system failure requiring service.
3. A TPC communication failure (crash) while displaying a test pattern requires that the projector be cycled OFF and ON again.
4. If the TPC response becomes sluggish, try re-booting the projector. If it persists, the installer may have set the TPC **Data Logging** option to **Detailed**, which taxes memory and performance. For best results and normal operation, this setting should be reduced to **Errors** or **Standard**.
5. Erratic TPC behavior or an error message such as "**`Could not write to file`**" can also indicate an internal memory shortage. Make sure to regularly delete back-up files or corrupt files from the IPSM and/or CompactFlash memory card. Save backups to a PC/laptop only, not the TPC (contact your administrator).
6. If the locations of button presses on the screen seem to be misinterpreted, the TPC screen may need recalibrating.

7.4 Ethernet

1. If the TPC stalls at "**`Waiting to Connect`**", you have 30 seconds in which to enter a service login. Make sure the Ethernet settings are valid for your site-all devices should have the same subnet mask but unique IP addresses.
2. Make sure to save any address changes, and re-boot to *implement* all changes.
3. IP address shown in TPC **Admin** menu must match that of the projector.
4. If you still have trouble establishing communications with a projector added to an existing Ethernet network, the projector's IP address is likely in conflict with another address already in use. Contact your network administrator.

7.5 Cinema Displays

7.5.1 Blank Screen, No Display of Cinema Image

1. Confirm all power connections are still OK.
2. Make sure there is no lens cap present.
3. Make sure the douser/shutter is OPEN (button is on TPC **Main** menu).
4. Make sure there is not a full black test pattern selected for display.
5. Is the correct display file selected? Check the *Touch Panel Controller*.
6. Is the correct cinema port connected for this display file? Check connections.

7.5.2 Severe Motion Artifacts

Most likely there is a synchronization problem with reversed 3/2 pull-down in 60Hz-to-24Hz film-to-digital conversion in your source. The display file needs correction.

7.5.3 Image Appears Squeezed or Vertically Stretched into Center of Screen

Source data converted from film and pre-squeezed for ***CP2000-SB***'s display format may require use of the anamorphic lens to regain full scope image width and proper proportions.

7.5.4 No Image, Just Pink Snow

1. Make sure the projector's lid is not open. In the event it is open, close the lid and pause or stop the show on the server. Then, press play on the server and wait several seconds for the projector to receive the set of decryption keys (from the server). If after 30 seconds the projector doesn't recover, pause or stop the show and try playing again. If this doesn't work, try resetting the server.
2. Make sure the IP octets for the projector and the server (Eth1 port) match.
3. CineCanvas does not have the correct projector IP address. Check the IP address of the projector and server and change if necessary. They should match.

7.6 Non-Cinema Displays

The following troubleshooting entries assume that you are using a 3rd-party input source for displaying alternative non-cinema material. As a first step, always consult the documentation supplied with the external equipment.

7.6.1 The Projector is ON but There's No Display

1. Was a lens cover accidentally left on? Remove lens cover.
2. Make sure the douser is OPEN.
3. Is the lamp ignited? Press the lamp button on the *Touch Panel Controller*.
4. Is the correct DVI display button selected on the *Touch Panel Controller*?
5. Is AC power connected?
6. Is an active source connected properly? Check the cable connections and make sure the alternative source is selected.
7. Can you access test patterns? If so, check your source connections again.

7.6.2 The Display is Jittery or Unstable

1. If the non-cinema display is jittery or blinking erratically, ensure that the source is properly connected and of adequate quality for detection. With a poor quality or improperly connected source, the projector will repeatedly attempt to display an image, however briefly.
2. The horizontal or vertical scan frequency of the input signal may be out of range for the projector. Refer to *Section 8 Specifications* for scan frequency ranges.
3. The sync signal may be inadequate. Correct the source problem.

7.6.3 The Display is Faint

1. Brightness and/or contrast may be set too low.
2. The source may be double terminated. Ensure the source is terminated only once.
3. The source (if non-video) may need sync tip clamping.

7.6.4 The Upper Portion of the Display is Waving, Tearing or Jittering

This can sometimes occur with video or VCR sources. Check your source.

7.6.5 Portions of the Display are Cut Off or Wrap to the Opposite Edge

Resizing may need adjustment. Adjust until entire image is visible and centered.

7.6.6 The Display Appears Compressed (Vertically Stretched)

1. The frequency of the pixel sampling clock is incorrect for the current source.
2. Sizing and positioning options may be adjusted poorly for the incoming source signal.
3. Use an anamorphic lens for typical HDTV and anamorphic DVD sources that have been re-sized and vertically stretched via 3rd-party software.

7.6.7 Data is Cropped from Edges

To display the missing material, reduce image size to fill the display area available in the projector, then stretch vertically to fill the screen from top to bottom. Add the anamorphic lens to regain the image width.

7.6.8 Display Quality Appears to Drift from Good to Bad, Bad to Good

1. The source input signal may be of low quality.
2. The H or V frequency of the input may have changed at the source end.

7.6.9 The Display has Suddenly Frozen

If the screen blacks out inexplicably, it is possible that excessive voltage noise on the AC or ground input has interrupted the projector's ability to lock on to a signal. Power down the projector (refer to *Section 3.3 Power-down Procedure*) and unplug. Then plug in again and power up as usual (refer to *Section 3.2 Power-up Procedure*).

7.6.10 Colors in the Display are Inaccurate

1. The color, tint, color space and/or color temperature settings may require adjustment at your input source.
2. Make sure you are using the proper PCF, TCGD and/or CSC file for this source.

7.6.11 The Display is Not Rectangular

1. Check leveling of the projector. Make sure that the lens surface and screen are parallel to one another.
2. Is the vertical offset correct? Adjust as necessary using the vertical offset knob.
3. Is the anamorphic lens straight? Rotate to orient aperture correctly.

7.6.12 The Display is “Noisy”

1. Display adjustment at your input source may be required. Adjust pixel tracking, phase and filter. Noise is particularly common on YPbPr signals from a DVD player.
2. The video input may not be terminated. Make sure the video input is terminated (75 Ω). If it is the last connection in a loop-through chain, the video input should be terminated at the last source input only.
3. The input signal and/or signal cables carrying the input signal may be of poor quality.
4. If the distance between the input source device and the projector is greater than 25 feet, signal amplification/conditioning may be required.
5. If the source is a VCR or off-air broadcast, detail may be set too high.

7.6.13 There are Random Streaks on the Bottom of the Image

1. If a 24Hz or 25Hz HDSDI signal or a 50 Hz SDI digital PAL signal, make sure to use ***non***-cinema processing-delete the checkmark for **Cinema** checkbox in the *Touch Panel Controller*'s **Advanced** menu. **NOTE:** *password-protected*.
2. Or, if you do not have access to the *Touch Panel Controller*'s **Advanced** menu and cannot adjust the processing path, use your 3rd-party input source to crop off the streaks.

8 Specifications

Due to continuing research, specifications are subject to change without notice. **NOTE:** *The illustrations provided are to enhance the understanding of the written material. They are graphical representations only and may not represent your exact projector model.*

- *8.1 Display*
- *8.2 Lenses*
- *8.3 Inputs*
- *8.4 Touch Panel Controller*
- *8.5 Power Specifications*
- *8.6 Lamps*
- *8.7 Regulatory*
- *8.8 Environment*
- *8.9 Weight & Size*
- *8.10 Standard Components*

8.1 Display

Panel Resolution and Refresh Rate	Pixel format (H x V) on 3 DMDs	2048 x 1080
	2D Refresh rate (*DLP™ Cinema processing*)	23.97 - 48 Hz (SMPTE 292M) *
	2D Refresh rate (*Non-cinema processing*)	23.97 - 85 Hz (VESA DVI) *
	3D Refresh rate (*24 Hz per eye*)	144 Hz max.
	Pixel Clock rate	150 MHz max.
Achievable Brightness	Requires maximum output conditions	14 fL on 25m (75 ft.) screen
Achievable Contrast Ratio	2000:1 full on/off	
Colors and Gray Scale	Displayable colors	35.2 trillion
	Gray scale resolution	15 bits each per RGB component (45 total linear)
White Point	Nominal white (full white after calibration, in telecine mode)	x = 0.314 ± 0.002 y = 0.351 ± 0.002
Gamma	2.6 (nominal)	

8.2 Lenses

Primary Zoom Lenses (High Contrast)	Part #	Max. % of Image Below or Above Lens Center*
1.25 - 1.45:1	38-809079-51	100% (vertical), 70% (horizontal)
1.45 - 1.8:1	38-809061-51	100% (vertical), 70% (horizontal)
1.8 - 2.4:1	38-809052-51	100% (vertical), 70% (horizontal)
2.2 - 3.0:1	38-809053-51	100% (vertical), 70% (horizontal)
3.0 - 4.3:1	38-809069-51	100% (vertical), 70% (horizontal)
4.3 - 6.0:1	38-809081-51	100% (vertical), 70% (horizontal)
5.5 - 8.5:1	38-809080-51	100% (vertical), 70% (horizontal)

Primary Zoom Lenses (High Brightness)	Part #	Max. % of Image Below or Above Lens Center*
1.25 - 1.45:1	108-274101-01	100% (vertical), 70% (horizontal)
1.45 - 1.8:1	108-275101-01	100% (vertical), 70% (horizontal)
1.45 - 2.05:1	108-335102-01	100% (vertical), 70% (horizontal)
1.6 - 2.4:1	108-336103-01	100% (vertical), 70% (horizontal)
1.8 - 2.4:1	108-276101-01	100% (vertical), 70% (horizontal)
1.8 - 3.0:1	108-337104-01	100% (vertical), 70% (horizontal)
2.15 - 3.6:1	108-338105-01	100% (vertical), 70% (horizontal)
2.2 - 3.0:1	108-277101-01	100% (vertical), 70% (horizontal)
3.0 - 4.3:1	108-278101-01	100% (vertical), 70% (horizontal)
4.3 - 6.0:1	108-279101-01	100% (vertical), 70% (horizontal)
5.5 - 8.5:1	108-280101-01	100% (vertical), 70% (horizontal)

OPT. AUXILIARY LENSES **	PART #	MAX. % OF IMAGE OFFSET FROMS LENS CENTER
1.25x Anamorphic (for 2.39:1 scope screen)	38-809054-51	n/a (determined by primary lens)
1.26x Wide Converter (for 2.39:1 scope screen)	108-281101-01	n/a (determined by primary lens)
Motorized Auxiliary Lens Mount	108-111102-xx	n/a (determined by primary lens)

**Maximum offsets are reduced when simultaneously offsetting horizontally and vertically*

*** Auxiliary lenses install in the auxiliary adapter (optional) and are used in conjunction with a primary lens.*

8.3 Inputs

8.3.1 Cinema Inputs

Number of inputs	2
Standard supported	SMPTE 292M bit-serial
Connector Type	BNC

NOTE: *Currently supported cinema formats are listed in* **Table 4.1 on page 2**.

8.3.2 Non-Cinema DVI Inputs (for Alternative Content)

Number of inputs	2
Standard supported	VESA Digital Visual Interface (DVI-D)
Connector Type	24-pin female DVI-D

NOTE: *Currently supported DVI formats (i.e., non-cinema formats) are listed in* **Table 5.1 on page 2**.

8.3.3 Control Ports

RS-232 connectors (2): 9-pin D female	A= Non-ASCII PC communication B=Christie-proprietary accessories only
Ethernet connector (1): RJ-45 female	Stnd. 100 base-TX, 100 Mbps max.
GPIO connector (1): 37-pin D female	
Ballast Control Port (1): 9-pin D male (not a user port)	RS-232, w/proprietary protocol
Ballast Interlock Port (1): 9-pin D female (not a user port)	+5V TTL-compatible, opto-isolated at ballast end

8.4 Touch Panel Controller

Type of Display	5.7" diag. color LCD, backlit
Integrated Operating System	Microsoft Windows® CE
Communication Interface w/CP	10BaseT Ethernet
Power Requirement.	0.05 A max., at 24 VDC ±10%
Current Rating	2.0 A max.
Interface Connector	8-pin DIN, bayonet-locking
Memory	64MB or higher

8.5 Power Specifications

Projection Head	
Projection Compartment AC (near Panel B, at front)	
Connector type & rating	(1) IEC 320-compatible, 15 A rating
Voltage range	100 - 230 VAC ±10%
Line frequency	50 - 60 Hz nominal
Max. inrush current	38 A
Max. current consumption	2.4 A @ 100V
Max. power consumption	240 W
Max. current at this AC input	5 A
Lamp Compartment AC (near Panel C, at front)	
Connector type & rating	(1) IEC 320-compatible, 15 A rating
Voltage range	200 to 230 VAC ±10%
Line frequency	50 - 60 Hz nominal
Max. inrush current	7 A
Max. current consumption	1 A @ 230V
Max. power consumption	230 W
Max. current at this AC input	5 A
Lamp DC	
Max. voltage	41 VDC
Start-up voltage	80 V min., 107 V max.
Max. current consumption	170 A
Max. power consumption	6600 W

CP2000-SB Pedestal (3-Phase Plus Single-Phase)	
Nominal voltage	208 VAC (N. America / Japan) 400 VAC (Europe / Asia)
Absolute operating voltage range	180-235 VAC (N. America / Japan) 342-456 VAC (Europe / Asia)
Line frequency	50 Hz - 60 Hz nominal
Inrush current (max.) **NOTE:** *does not include lamp*	38 A (N. America / Japan) 26 A (Europe / Asia)
Current consumption per phase (max.) @ 6.0 kW	28 A @ 208 VAC (N. America / Japan) 16 A @ 400 VAC (Europe / Asia)
Power consumption (max.)	8.8 kW, all regions
Current rating (continuous) of 3-phase AC input at breaker	40 A (N. America / Japan) 40 A (Europe / Asia)
Ballast	
Start-up voltage	135 - 175 VDC
Operating voltage range	18 - 46 VDC
Operating current range	50 - 180 A
Max. ripple	1% max @ 25°C
Internal "Convenience AC" **	
Qty. & type of AC connector/receptacle	1 terminal block (N. America / Japan) 1 terminal block (Europe / Asia)
Maximum wire gauge for terminal blk.	8 AWG
Nominal voltage(dependent on voltage connected to unit)	100 / 120 (N. America / Japan) 208 / 240 (Europe / Asia)
No. of phases, any region	1
Line frequency, any region	50 Hz - 60 Hz nominal
Power available (max.)	1320 W (N. America / Japan) 1500 W (Europe / Asia)
Current available, any region	10 A

8.6 Lamps

CXL/CDXL Lamps (kW)	Current Range (amps)	Average life (Hours)
CXL*/CDXL-20 (2.0)	60-85	3500
CXL/CDXL-30 (3.0)	90-120	2500
CXL/CDXL-45 (4.5)	95-155	900
CXL/CDXL-60 (6.0)	105-165	1000
CDXL-60SD (6.0)	105-170	700

***** *CXL-20 requires adaptor kit (P/N 003-001728-xx)* **NOTE**: *Current range shown includes over-drive, which is 10% more than the original lamp rating.*

Table 8.1 Minimum and Maximum Lamp Power by Lamp Type

Lamp Type	Min Lamp Power	Max Lamp Power
Other-16	1200W (75%)	1760W (110%)
Other-20	1500W (75%)	2200W (110%)
CXL-20	1500W (75%)	2200W (110%)
CDXL-20	1000W (50%)	2200W (110%)
Other-30	2000W (67%)	3300W (110%)
CXL-30	1000W (33%)	3300W (110%)
CDXL-30	2000W (67%)	3300W (110%)
CDXL-30SD	2000W (67%)	3300W (110%)
Other-45	3375W (75%)	4950W (110%)
CXL-45	1500W (33%)	4950W (110%)
CDXL-45	2300W (51%)	4950W (110%)
Other-60	4500W (75%)	6600W (110%)
CXL-60	2000W (33%)	6600W (110%)
CDXL-60	2750W (46%)	6600W (110%)
CDXL-60SD	2750W (46%)	6600W (110%)

Type	**Xenolite®**
Stand-by lamp power level for 4-6 kW	50% of lamp's maximum current rating
Stand-by lamp power level for 2-3 kW	75% of lamp's maximum current rating
Motorized adjustment of position	3-axis, 0.25" range for each

Recommended screen widths:
2.0 kW =45 ft. nominal
3.0 kW =55 ft. nominal
4.5 kW =65 ft. nominal
6.0 kW =75 ft. nominal

8.7 Regulatory

Audible Noise	70 dBA maximum. **NOTE:** *Does not include customer-supplied external extractor fan.*
Safety	• **UL 60950-1 and CAN/CSA C22.2. No. 60950-1-03 1st edition, bi-national.** • **IEC 60950-1:2001**
EMC Emissions	• **FCC CFR47, Part 15, Subpart B, Class A -** Unintentional Radiation • **CISPR 22: 2003 +A1:2004 / EN55022: 1998 +A2:2003, Class A** - Information Technology Equipment
EMC Immunity	CISPR 24:1997 / EN55024:1998 +A1:2001 +A2:2003 EMC Requirements - Information Technology Equipment

8.8 Environment

8.8.1 Operating Environment

Temperature	10°C to 35°C (50°F to 95°F)
Humidity (non-condensing)	20% to 80%
Altitude	0 - 3000 meters

8.8.2 Non-Operating Environment

Temperature	-25C to 65°C (-13°F to 149°F)
Humidity (non-condensing)	0% to 95%

8.9 Weight & Size

Shipping Weight		
Projection Head	Pedestal	Total
355 lb. (161.4 kg)	450 lb. (204.5 kg)	805 lb. (365.9 kg)

Installed Weight (Without Lens)		
Projection Head	Pedestal	Total
240 lb. (109 kg)	350 lb. (159 kg)	590 lb. (268 kg)

NOTE: *All weights subject-to-change*

See page 8-8.

Standard Dimensions (W x L x H)

25" (63.5 cm) x 55.5" (141 cm) x 54" (137.2 cm) *(with longest primary lens, no anamorph)*

Size with Anamorph (W x L x H)

25" (63.5 cm) x 62" (157.5 cm) x 54" (137.2 cm) (*with auxiliary lens mount & lens)*

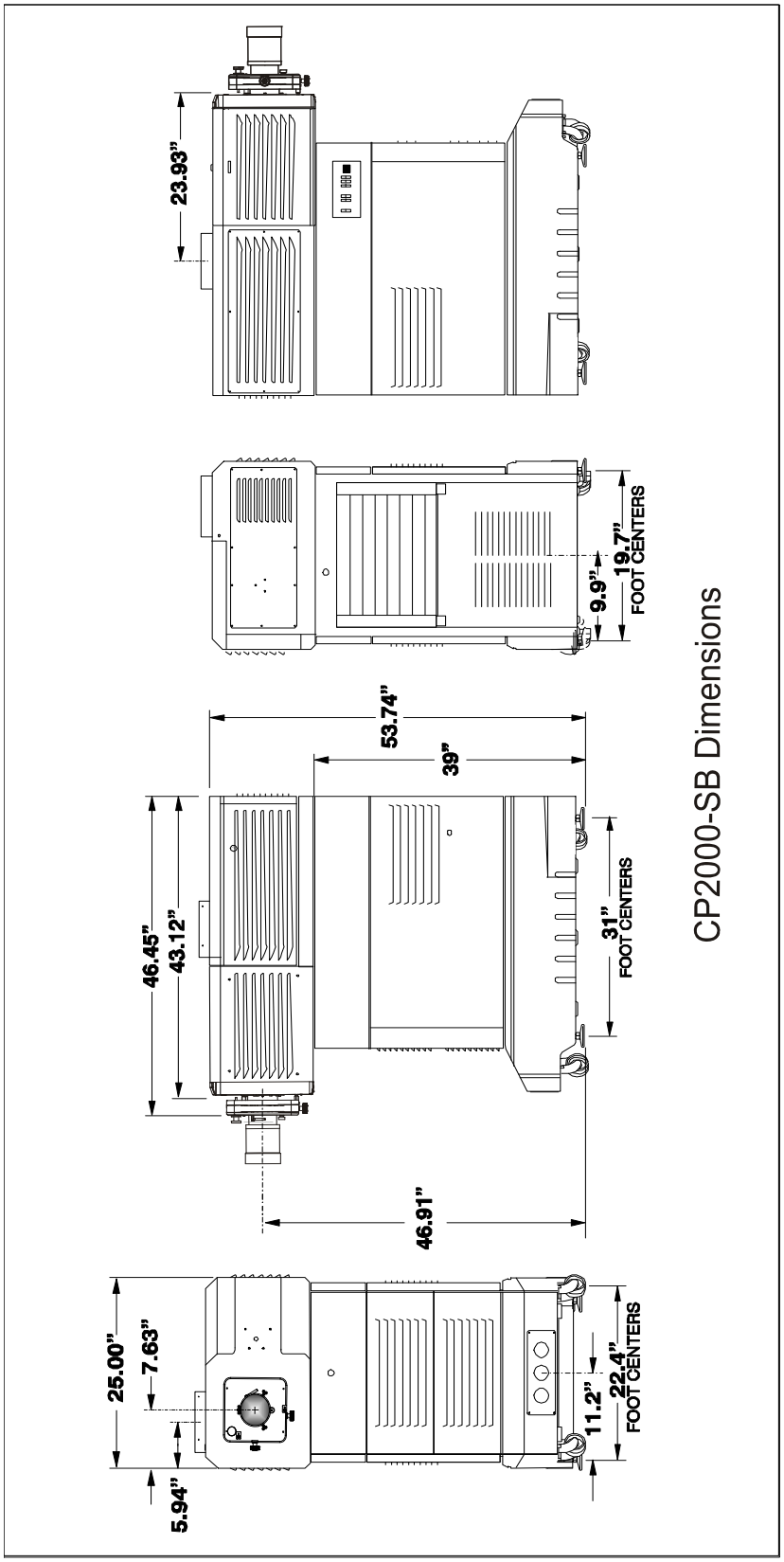
23.93”
9.9”
19.7”
FOOT CENTERS
53.74”
39”
46.45”
43.12”
31”
FOOT CENTERS
46.91”
25.00”
7.63”
5.94”
11.2”
22.4”
FOOT CENTERS
CP2000-SB Dimensions

8.10 Standard Components

- Pedestal on casters. Refer to *Section 1.2.2 Software Requirements* for pedestal types
- Projection head with lens mount and TPC
- Lamp (choices shown on *Section 8.6 Lamps*)
- 1 primary zoom lens (high-contrast; choices listed below)
- Assorted cabling (most pre-connected) and misc. assembly hardware
- *CP2000-SB User Manual*

Other	P/N
Protective Clothing Kit (for opening of lamp door)	598900-095
DCP Librarian Setup Software (for calibration / setup by Christie installer)	

Appendix A: Glossary

The glossary defines the specific terms used in this manual as they apply to this projector. Also included are other general terms commonly used in the projection industry.

3:2 PULLDOWN

A frame sequence used to map 24 fps film to 30 fps video (or 24/1.001 to 30/1.001 fps) in which every second film frame is represented by three video fields instead of two, the third being a repeat of the second. This leads to a set of ten video fields for each four film frames.

ACTIVE LINE TIME

The time, inside one horizontal scan line, during which video is generated.

ACTIVE PICTURE

The area of a video *frame* which carries image information. As an example, a total frame size of 1125 x 2200 *pixel*s may have an active picture of 1280 active lines and 1920 samples per active line. Compare to *production aperture*.

ALTERNATIVE CONTENT

Non-cinema program material such as concerts, plays, sporting events, and potentially corporate training or conferencing, presented in theatres in addition to motion picture exhibition. Alternative content connects to one of the projector's DVI ports.

AMBIENT LIGHT REJECTION

The ability of a screen to reflect ambient light (i.e., light within a room from a source other than the projector) in a direction away from the line of best viewing. Curved screens usually have better ambient light reflection than do flat screens.

ANAMORPHIC

Having or requiring a linear distortion, generally in the horizontal direction. Anamorphic lenses restore a scope (CinemaScope) or flat format film frame to the correct appearance by increasing its horizontal proportion. The *CP2000* uses a 1.25x scope anamorphic lens option.

ANSI

The American National Standards Institute is the organization that denotes the measurement standard for lamp brightness.

ANSWER PRINT

A print made from the cut original (camera) negative with proposed final color timing and soundtracks, furnished by the printing lab to the producer for acceptance of image and sound before screenings and manufacturing begin. A check print is similar, but is made from the internegative. A blacktrack answer print has no soundtracks.

ASPECT RATIO

The ratio of the width of an image to its height, such as the 4:3 aspect ratio common in video output. Can also be expressed as a decimal number, such as 1.77, 1.85 or 2.39. The larger the ratio or decimal, the wider and less square the image.

AUTHORING

The process, tools, and working environment by which content elements and functions are compiled, formatted, coordinated, and tested for presentation on target systems. *Comment*: Authoring in the context of digital cinema does not necessarily result in inseparably married or muxed content components. Rather, reference is made to a virtual answer print, the elements of which may subsequently be subdivided or combined, encrypted in whole or part, and packaged in various ways for distribution of the title, a version of the title, or an update for revision of the title in the field.

AUTOMATION

A system used in a theatre projection booth that responds to cues, commands or relay switches and then controls various elements of presentation, such as:

- picture format and corresponding lens (flat or scope)
- sound format and corresponding cinema processor settings
- curtain movement and position
- lighting level in the auditorium
- non-sync play and fade in/out
- digital cinema projector

NOTE: *Christie's optional automation system is not yet available.*

AUTO SOURCE

The ability of the projector to automatically recognize and synchronize to the horizontal and vertical scan frequencies of an input signal for proper display.

BANDWIDTH

The frequency range of the projector's video amplifier.

BAUD RATE

The speed (bits-per-second) at which serial communications travel from their origin.

BIT DEPTH

The total number of bits available to represent each pixel or color sample in a digital imaging system. Using linear binary coding, the total number of resolution steps available is equal to 2 raised to the power of the bit depth.

BLANKING TIME

The time inside one scan line during which video is not generated. The blanking time of the input signal must be equal to or greater than the retrace time of the projector.

BRIGHTNESS

In cinema projection, brightness usually describes the amount of light emitted from a surface such as a screen. It is measured in footlamberts or candelas per square meter.

CANDELA OR CANDLE

Unit of measure for measuring intensity of light in certain types of projectors.

CHANNEL

A collection of measurements stored by the projector for a given input source, including frequencies, pulse width, polarity, syncs, channel number and location, user-adjustable display settings, etc. Use channels to switch between a variety of setups quickly, automatically recalling previously defined display parameters.

CHANNEL LIST

A list/menu of previously defined channels available in projector memory.

CHANNEL NUMBER

A number that uniquely identifies a specific channel retained in projector memory. The projector (via its TPC) offers up to 8 channel choices at once.

CHECKBOX

A menu item that indicates whether an option is currently in effect (checked) or not (unchecked).

CHROMINANCE

The signal representing the color information (hue and saturation) when the image is represented as separate chrominance and luminance. Same as "chroma".

CLEAN APERTURE

The fraction of a motion picture *frame* image that is intended to be viewed by the audience. The clean aperture is subjectively free of edge artifacts and lies within the screen area framed by curtains in a cinema. Aspect ratio is often referenced to the clean aperture.

COLOR GAMUT

The range of colors allowed in a specific system, as defined within a triangular area located on the CIE color locus diagram whose corners are the three primaries defined in the system. Also known as color space.

COLOR SHIFT

A change in the tint of a white field across an image.

COLOR TEMPERATURE

The coloration (reddish, white, bluish, greenish, etc.) of white in an image, measured using the Kelvin (degrees K) temperature scale. Higher temperatures output more light.

COMPONENT VIDEO

Refer to *YcbCr* or *YPbPr*.

COMPOSITE VIDEO

The output of video tape players and some computers, characterized by synchronization, luminance and color signals combined on one output cable.

CONTRAST (RATIO)

The degree of difference between the lightest and darkest areas of the image.

CONVERGENCE

The alignment of the red, green, and blue light elements of a projected image so that they appear as a single element. In this projector, convergence can be adjusted by Christie service personnel only.

CURVED SCREEN

A projection screen which is slightly concave for improved screen gain. Curved screens usually have screen gains, which are greater than 1 but viewing angles much less than 180°. Curved screens are not recommended for use with this projector.

DCDM

Digital Cinema Distribution Master. A file or collection of files formatted for exhibition and comprised of all the components of the *title*. A reference size of about 200 GB per title is likely.

DDC

The Display Data Channel VESA standard enables communication between PCs and monitors, and is based on E-EDID protocol.

DMD™

Digital Micromirror Devices™ used in this projector for processing red, green, and blue color data.

DSM

Digital Source Master. A title's native source files in acquisition format, edited to create the distribution master and for reformatting for NTSC, HDTV, DVD, etc., and potentially archived.

DVI

The Digital Visual Interface standard signal supplies digital RGB, sync, I^2C, and clock information to the single-link DVI-1 or DVI-2 ports on the projection head.

DETAIL

The sharpness of a display from a video source.

DIFFUSED SCREEN

A type of rear-projection screen which spreads the light striking it. Screen gain is less than 1 but audience viewing angles are increased. Rarely used in cinema.

DIGITAL CINEMA

Professional public presentation of theatrical content by electronic means, particularly emphasizing projectors such as the *CP2000* whose image source is digital data. Also known as d-cinema and (rarely) e-cinema.

DIGITAL INTERPOLATION

Also known as digital scaling. The process of averaging pixel information when scaling (resizing) an image up or down. When reducing the size of an image, adjacent pixels are averaged to create fewer pixels. When increasing the size of an image, additional pixels are created by averaging together adjacent pixels in the original smaller image.

DOT CLOCK

The maximum frequency of the pixel clock.

E-EDID

The Enhanced Extended Display Identification Data standard, established by VESA, enables properties (such as resolution) of a display device to be detected by the display card in a controlling device such as a PC. The PC, in turn, can then output in a matching format to fill the display. Some sources used with the projector are VESA E-EDID reported.

E-STOP

Emergency stop of the presentation due to equipment failure, a commotion in the audience, or any trigger from the theatre's life safety system that could require stopping the show, raising the house lights, and enabling a PA announcement.

FOOT-CANDLE

The intensity of visible light per square foot.

FOOT-LAMBERT

The luminance (brightness) which results from one foot-candle of illumination falling on a perfectly diffuse surface. 1 fL = 3.423 candela per square meter (cd/m^2). For example, the SMPTE RP 98 calls for theatre screen luminance of 12 to 22 fL; 16 +/- 2 fL (55 +/- 7 cd/m^2) is the open gate target according to SMPTE 196M. For cinema applications, *xenon lamp* wattage is approximated to achieve this level using 12 W/ft^2 x (screen height squared) or 5 W/ft^2 of total 'scope image area, for matte screens and typical lenses.

FRAME RATE

The frequency at which complete images are generated. For non-interlaced signals, the frame rate is identical to the vertical frequency. For interlaced signals, the frame rate (also known as field rate) is one half of vertical frequency.

GAIN OR SCREEN GAIN

The ability of a screen to direct incident light to an audience. A flat matte white wall has a gain of approximately 1. Screens with gain less than 1 attenuate incident light; screens with gain more than 1 direct more incident light to the audience but have a narrow viewing angle. For example: An image reflecting off a 10 gain screen appears 10 times brighter than it would if reflected off a matte white wall. Curved screens usually have larger gain than flat screens.

GVG

Grass Valley Group (formerly part of Tektronix). More specifically, the .gvg file format used for compressed video, audio, and timecode stream transfer in the Profile video server products, proposed for standardization by SMPTE and as a primary component of *MXF*. Initially implemented on *Fibre Channel* using *FTP* with *TCP/IP* but extensible to XTP or other protocols. Previously called GXF: General Exchange Format.

HDCP

High-bandwidth Digital Content Protection protocol of keys and encryption helps prevent DVI source material from being copied.

HDTV

High-definition Television (1035, 1080 and 1125 lines interlace, and 720 and 1080 line progressive formats with a 16:9 (i.e. 1.77) aspect ratio.

HELP SCREEN

A display of help information regarding the current task or presentation. Not available in *CP2000*.

HORIZONTAL FREQUENCY

The frequency at which scan lines are generated, which varies amongst sources. Also called horizontal scan rate or line rate.

HORIZONTAL OFFSET

The difference between the center of the projected image and the center of the projector lens. For this projector, this value is expressed as the maximum percentage of the image that can be projected to one side of the lens center without degrading the image quality.

HOT SPOT

A circular area of a screen where the image appears brighter than elsewhere on the screen. A hot spot appears along the line of sight and moves with the line of sight. High gain screens and rear screens designed for slide or movie projection usually have a hot spot.

ILS™

The *Intelligent Lens System*™ describes the ability of Christie projectors having a motorized lens mount to automatically return to lens settings previously defined for a particular channel. Not available in cinema projectors such as *CP2000*.

INPUT

A physical connection route for a source signal, described by a 2-digit number representing 1) its switcher/projector location and 2) its slot in the switcher/projector.

INPUT SIGNAL

Signal sent from a source device to the projector.

INTERFACE MODULE

A device, such as the *Serial Digital Input Module*, that accepts an input signal for display by the projector. Interfaces are not used with the *CP2000*.

INTERLACE

A method used by video tape players and some computers to double the vertical resolution without increasing the horizontal line rate. If the resulting frame/field rate is too low, the image may flicker depending on the image content.

KEYSTONE

A distortion of the image which occurs when the top and bottom borders of the image are unequal in length. Side borders both slant in or out, producing a “keyhole” shaped image. It is caused when the lens surface is not parallel to the screen.

LAMPLOC™

A Christie software feature where samples of output light from a projector guide the precise position of the lamp along 3 axes—vertical, horizontal and distance to lens—so that lamp performance and output is maximized.

LIFE SAFETY

A safety control system integrated into the HVAC, fire alarm, and other infrastructure components of the theatre as well as the presentation system. *Comment*: In the event of a fire, for example, the life safety system may turn on the auditorium lighting to full intensity, cancel the presentation audio and replace it with a PA microphone or pre-recorded announcement, turn the lamp off, flash warning lights, and so forth. Every jurisdiction may have different statutory requirements for life safety systems.

LINEARITY

The reproduction of the horizontal and vertical size of characters and/or shapes over the entire screen.

LINE OF BEST VIEWING

When light from a projector is incident on a screen, the light reflects from the screen such that the angle of reflection equals the angle of incidence. The Line of Best Viewing is along the line of reflection.

LITELOC™

A Christie software feature where samples of output light from a projector trigger automatic adjustments in the lamp ballast power in order to maintain a constant light output over time.

LOOPTHROUGH (LOOPTHRU)

The method of feeding a series of high impedance inputs from a single video source with a coaxial transmission line in such a manner that the line is terminated with its characteristic impedance at the last input on the line. Not applicable in *CP2000*.

LUMEN

The unit of measure for the amount of visible light emitted by a light source. Rarely used in cinema applications.

LUMINANCE

The signal representing the measurable intensity (comparable to brightness) of an electronic image when the image is represented as separate *chrominance* and *luminance*. Luminance also expresses the light intensity of a diffuse source as a function of its area; measured in lumens or candles per square foot (1 lumen per square foot = 1 *foot-lambert*). SMPTE RP 98 calls for a luminance of 12 to 22 footlamberts for theatre screens. Refer to *Foot-Lambert*.

LUX

The amount of visible light per square meter incident on a surface.

1 lux = 1 lumen/square meter = 0.093 foot-candles

MENU

A list of selectable options displayed on the *Touch Panel Controller.*

METADATA

Descriptive data about the format of the content—i.e., “data about data”. When receiving metadata, digital cinema projectors will know the correct aspect ratio of the image, and the sound processor will know the correct format of the audio, all without effort on the part of the person setting up the show on a particular projector.

MIB

A database file defining a particular network object (such as a device: TPC, server, etc.) that can be monitored by a network management system such as SNMP.

NTSC VIDEO

A video output format of some video tape and disk players. There are two types of NTSC (National Television Standards Committee) video: NTSC 3.58 and NTSC 4.43. NTSC 3.58 is used primarily in North America and Japan. NTSC 4.43 is less commonly used.

NON-CINEMA

Alternative program material such as concerts, plays, sporting events, and potentially corporate training or conferencing, presented in theatres in addition to motion picture exhibition. A non-cinema source connects to one of the projector’s DVI ports.

NON-SYNC

Audio played in a theatre, generally from a CD, when the cinematic presentation is not running, such as during intermissions and prior to the start of film presentation.

NON-UNICODE

The non-unicode method of encoding produces a concise character set of 256 alpha-numeric characters typically used in for ASCII messaging in most Western languages. Virtually all TPC functions can be executed remotely via non-unicode (default) or unicode messaging—this is auto-detected. Refer to *Unicode*.

OPTICAL SCREEN

A type of rear-projection screen which re-directs light through the screen to increase image brightness in front of the screen. Screen gain is usually greater than 1 but audience viewing angles are reduced. Rarely used in cinema applications.

PAL VIDEO

PAL (Phase Alternating Line) video is a 50 Hz standard with 768 x 576 resolution. It is found on some video tape and disk players (used primarily in Europe, China and some South American and African countries).

PCF

Projector Configuration File, or Presentation Control File. A small file created by the content owner or installer that controls the presentation of the elements and data subdivisions constituting a single version of a title. The text component may identify the name of the title, its owner, its length, event points, and other attributes. The PCF specifies color space, target color gamut, gamma (a.k.a. “degamma”), aspect ratio and image position settings. It does *not* include screen masking (cropping) information. PCFs were originally intended as part of content distribution.

PINCUSHION

A distortion of the image shape characterized by concave edges.

PIXEL (PICTURE ELEMENT)

The smallest discernible element of data in a digital image.

PIXEL CLOCK RATE

Pixel clock rate describes the speed at which incoming data is processed, and is dependant on the native resolution and vertical frequency (such as 1280 x 1024 x 60Hz, or 2048 x 1080 x 24Hz) of the incoming source. The two processing paths available in the projector—cinema vs. non-cinema—offer different maximum pixel clock rates: *110 MHz* if cinema path, and *165 MHz* if non-cinema path, thus their use with DVI sources depends on the incoming resolution and vertical frequency.

PIXEL PHASE

The phase of the pixel-sampling clock relative to incoming data.

PIXEL TRACKING

The frequency of the pixel-sampling clock, indicated by the number of pixels per line.

PLAY LIST

A small file or script typically created by the exhibitor or installer that specifies the sequence of presentation of programs, including features and trailers.

PLAYOUT

The equipment in a digital cinema theatre which delivers previously recorded signals in real time to the *playback* system. The playout may also receive, store, and process these signals prior to delivering them.

POST PRODUCTION

The phase in film-making that occurs primarily after production ends; its processes include picture editing, sound effects editing and mixing, ADR, Foley, titles and opticals, dubbing and print mastering, CGI and visual effects, and scoring. Post production culminates in acceptance of the original negative *answer print*. Even though post production officially begins on the last day of principal photography, post production facilities such as editing are utilized from very early in the production phase in order to save time.

PRODUCTION APERTURE

The area (in pixels, for digital images) that constitutes the entire motion picture frame image. Refer to *Active Picture*.

PROJECTOR-TO-SCREEN-DISTANCE

The distance between the projector's front feet centers and the screen. Also called Throw Distance.

PROTOCOL

The type of code format called **A** or **B** utilized by the remote keypad(s). The default protocol set at manufacture is Protocol **A**. By using two different keypad protocols, adjacent projectors can be controlled independently with their remote IR keypads.

PULL UP (PULL DOWN)

Shifting the frequency, sample rate, or frame rate to as to achieve a target frequency or time relationship with another signal, most commonly by +/- .1%–the ratio of NTSC to B&W TV frame rates. Refer to *3:2 Pulldown*.

PULL-DOWN LIST

A selectable menu item that unfolds into a list of options pertaining to it.

QUVIS

A manufacturer of a digital video recorder/player/server, QuBit, frequently used for providing digital cinema data. QuVis image compression uses a proprietary technology called Quality Priority Encoding, based on wavelets, in which the user selects a quality level based on *signal-to-noise ratio*. The data rate varies to efficiently maintain that quality level. Frames are coded individually.

REAR SCREEN

A translucent panel for screen projection. Incident light travels through the incident surface of a rear screen and forms an image on the other surface. Rarely used for cinema applications.

RELEASE PRINT

Composite positive motion picture prints, generally made from *internegative*s, intended for distribution to exhibitors.

RESIZING

The ability to manipulate through software commands the physical size, placement and/or aspect ratio of an image. Also called scaling.

RESOLUTION

The maximum number of pixels that the projector can display horizontally and vertically across an image, such as 1280 x 1024 (called SXGA) or 2048 x 1080.

RETRACE TIME (HORIZONTAL)

The minimum time required for a CRT projector to move the position of the scanning spot from the right edge to the left edge.

RGB VIDEO

The video output (analog or digital) of most computers. Analog RGB video can have 3, 4, or 5 wires - one each for red, green, and blue, and either none, one or two for sync. For three-wire RGB, the green wire usually provides sync. Refer to *TTL Video*.

RS-232

A common asynchronous data transmission standard recommended by the Electronics Industries Association (EIA). Also called serial communication.

RS-422

A less common asynchronous data transmission standard in which balanced differential voltage is specified. RS-422 is especially suited to long distances.

S-VIDEO

The output from certain video tape players and video equipment. S-Video separates sync and luminance from color information, typically producing a higher quality display than composite video. Also known as Y/C.

SCAN FREQUENCY

The horizontal or vertical frequency at which images are generated. Also known as scan rate or refresh rate.

SCAN LINE

One horizontal line on the display.

SECAM

A video output format of some video tape and disk players (used primarily in France). SECAM (Sequential Couleur á Mémoire) signals are similar in resolution and frequency to PAL signals. The primary difference between the two standards is in the way color information is encoded.

SHOW SCRIPT

A small file consisting of *automation cues* in addition to a play list, triggering theatre events (action data), and possibly including parameters that allow the program to be tailored for a specific venue or engagement. A show script is created by the exhibitor or installer and provides automated presentations. *Automation not yet available.*

SNMP

The Internet standard protocol developed to manage nodes (servers, workstations, routers, switches and hubs etc.) on an IP network. SNMP enables network administrators to manage network performance, find and solve network problems, and plan for network growth.

SOURCE

The device (such as a server) connected to the projector for supplying incoming data.

SOURCE SETUP

Refer to *Channel*.

SWITCHER

A signal selector—specifically, the *Marquee Signal Switcher* formerly manufactured by Christie—can be connected for adding more sources to a projector.

SYNC

This term refers to the part of the video signal that is used to stabilize the picture. Sync can occur in three forms:

- **Composite sync**: the horizontal and vertical components are together on one cable.
- **Sync-on-green**: the sync is part of the green video.
- **Separate sync** or **H.SYNC and V.SYNC**: the horizontal and vertical components of the sync are on two separate cables.

SYNC WIDTH

The duration of each sync pulse generated by a computer. The sync width is part of the blanking time.

TTL VIDEO

A type of RGB video with digital characteristics.

TAMPER INTERLOCK

A switch that detects when the light engine compartment is unlocked. It is monitored by the electronics to log accesses. If activated, encrypted playback such as cinema presentations for example will be interrupted.

TERMINATED

A wire connecting a single video source to a display device, such as a projector, must be terminated by a resistance (usually 75Ω for video).

THROW DISTANCE

The distance between the front feet of the projector and the screen. Also called **Projector-to-Screen Distance**. Always use the correct Christie throw distance formula to calculate the proper throw distance (±5%) required for your lens.

THROW RATIO

Throw ratio = throw distance / screen width.

TINT

Balance of red-to-green necessary for realistic representation of NTSC signals.

TMDS

Transition Minimized Differential Signaling is the basis for DVI (Digital Visual Interface)

TRAILER

Motion picture material presented prior to screening of the feature, so called because they were originally presented following the feature. Trailers are generally manufactured and created by the distributor in close cooperation with the producer; they are distributed by trailer specialists at no charge. Types of trailers include previews, teasers, house and/or policy trailers, advertisements, and public service announcements.

UNICODE

The Unicode method of encoding produces a very large character set typically required for ASCII messaging in non-Western languages such as Chinese, Russian, etc. In unicode, every number (code) is unique to a single character. A limited number of TPC functions can be executed remotely via unicode or non-unicode (default) messaging—this is auto-detected. Refer to *Non-unicode*.

VARIABLE SCAN

The ability of a projector to synchronize to inputs with frequencies within a specified range.

VERTICAL FREQUENCY

The frequency at which images are generated. Vertical frequencies vary amongst sources. Also called vertical scan rate.

VERTICAL OFFSET

The difference between the center of the projected image and the center of the projector lens. For this projector, this value is expressed as the maximum percentage of the image that can be projected above or below the lens center without degrading the image quality. All *CP2000* lenses have the same vertical offset range.

VESA

The Video Electronic Standards Association establishes standards of communication between electronic components to help ensure universal compatibility.

VIDEO

The signal that is used by display devices (such as projectors) to generate an image. This term also refers to the output of video tape/disk players and computers.

VIDEO DECODER

An optional device that converts NTSC 3.58, NTSC 4.4, PAL, PAL-N, PAL-M or SECAM to RGB video. Not applicable to *CP2000* XB.

VIDEO STANDARD

A specific type of video signal, such as NTSC, PAL, SECAM.

VIEWING ANGLE

Screens do not reflect equally in all directions. Instead, most light is reflected in a conical volume centered around the line of best viewing. Maximum brightness is perceived if you are within the viewing cone defined by the horizontal and vertical viewing angles.

WATERMARK

Data embedded in essence that serve different purposes and that are either imperceptible or obvious, robust or fragile. Their usual purpose is for legal support of copyright, and they may also be components of copy control schemes.

WHITE BALANCE

The color temperature of white used by the projector.

WHITE FIELD

The area of an image that is white only. For example, a full white field is an image that is white everywhere. A 10% white field is a white area (usually rectangular) that occupies 10% of the image; the remaining 90% is black.

YCBCR

A high-end *digital* component video signal.

YPBPR

A high-end *analog* component video signal. Sometimes called YUV, Component, or Y, R-Y, B-Y, the YPbPr signal bypasses the video decoder in this projector.

YUV

See *YPbPr*.

ZOOM

The adjustment of image size by means of a zoom lens.

Appendix B: ASCII Messages

Use the following ASCII messages (function codes) for remote communications with the TPC and its corresponding projector. All messages must be sent via Ethernet.

NOTE: *Please refer to Section 3.6 Remote Control of the Touch Panel Controller for a complete explanation of remote communications setup, message protocol and format.*

- *B.1 Function Codes*
- *B.2 Messages with Multiple Parameters*

B.1 Function Codes

Table B.1 Function Codes

Function Code / Examples	Description and Parameters
Anamorphic Lens (AML)	
(AML 0) or (AML 1) (aml?)	Move the anamorphic lens out (0) or in (1), or request status. **NOTE**: *Requires Motorized Anamorphic Lens Mount (optional).*
Channel Icon (CHI)	
(CHI S101 1)	Assign second icon in list to represent channel 101. Range = 0-15. Note the “S” required when specifying a channel other than the current channel.
(CHI 15)	Assign 16th icon in the list to represent the current channel. Range = 0-15.
(CHI?)	What is the current icon?
(CHI!004)	The 5th icon represents the current channel
Channel Name (NAM)	
(NAM S108 “Chicken Little”) or (NAMS108 “Chicken Little”)	Changes or assigns a name to a particular channel. Always preceded with “S” so that the name is assigned for this source only.
(NAM “text”)	Assign name to the current channel (256 characters max.)
(NAM s1 “text”)	Assigns a name to channel 1
(NAM s0 “text”)	Assigns the same name to all channels
Channel Selection (CHA)	
(CHA ###)	Selects between 1- 16 channels on the TPC. Value range: 101 - 132
(CHA?)	What is the current channel?
(CHA!S101)	Reply from proj. that new channel is 101 (first channel) Range = 101-132
Color Space Selection (CSP)	
(CSP “P7v2”)	Set the color space (gamut, or TCGD) to P7v2
(CSP?)	What color space is currently in use?
(CSP!“P7v2”)	The P7v2 color space is currently in use

Function Code / Examples	Description and Parameters
Data Format (DTF)	
(DTF)	Selects the source type and packing mode for the current input. Cinema source A or B: 0x00 = 4:2:2 unpacked, 10-bits/color *(default)* 0x01 = 4:2:2 packed, 12-bits/color 0x02 = 4:4:4 unpacked, 10-bits/color 0x03 = 4:4:4 packed, 12-bits/color Cinema dual link (A and B): 0x00 = 4:2:2 packed, 10-bits/color with O/E pixels *(default)* 0x01= 4:2:2 packed, 10-bits/color with O/E lines 0x02 = 4:2:2 packed, 12-bits/color with O/E lines 0x03 = 4:2:2 packed, 12-bits/color with O/E pixels 0x04 = 4:4:4 unpacked, 10-bits 0x05 = 4:4:4 packed, 10-bits/color, mixed 0x06 = 4:4:4 packed, 10-bits/color, O/E pixels 0x07 = 4:4:4 packed, 12-bits DVI port: 0x00 = Unpacked, 8-bits/color *(default)* 0x01 = Packed, 10-bits/color 0x02 = Packed, 12-bits/color
Data Logging (DLG)	
(DLG 1) (DLG?) (DLG!002)	0 = Minimum logging of activities—i.e., for errors only 1 = Standard logging (errors plus select operations) 2 = All activities are logged
Error Message Enable (EME)	
(EME 1) (EME!001)	Enable error messages sent via Ethernet, where 0= disabled and 1= enabled. Refer to ERR.

Function Code / Examples	Description and Parameters
Error Messages (ERR)	
(ERR!010)	Generated for projector errors. Provides error code, error type, and text explanation. 01 = Interlock Lamp Fan Error 02 = Interlock, Extractor Open 03 = Interlock Lamp Door Open 04 = Interlock, Auxiliary Open 05 = Card Cage Tamper Interlock 08 = Fan, Intake 1 09 = Fan, Intake 2 10 = Fan, Card Cage 11 = Fan, LAD 12 = Fan, Ballast 16 = Temperature, Prism 17 = Temperature, Red DMD 18 = Temperature, Blue DMD 19 = Temperature, Integrator 20 = Temperature, SSM 21 = Temperature, Card Cage 22 = Temperature, Ballast 23 = ILS over temperature 32 = Lamp Life Expired 33 = Lamp, Failed to Strike 35 = Lamp, Unexpected Lamp OFF 36 = Lamp, Reading Lamp Intensity Failed 48 = SSM, Communication Error 48 = SSM, Upgrade Failed 68 = I2C Communication Error 96 = ILS, Communications Error 97 = ILS, Sensor Failure 98 = ILS, In Bootloader 99 = ILS, CRC failure on main code

Function Code / Examples	Description and Parameters
Focus (FCS) ***requires v2.9 or higher***	
(FCS 860) (FCS 860 1) (FCS! 860 1 1)	Used to adjust the focus under motor control. **Write** P1 = Location P2 = Approach direction **NOTE**: *Approach is optional.* *(-1 = Positive to Negative Approach,* *1 = Negative to Position Approach)* **Read** P1 = Real-time position P2 = Current direction P3 = Moving Status (0 = not moving, 1 = moving) Related commands are Intelligent Lens System (ILS), Lens Horizontal Offset (LHO), Lens Vertical Offset (LVO), and Zoom (ZOM)
For Your Information (FYI)	
(FYI)	A change in projector status generally broadcast from TPC/proj. to all clients. See *Messages With Multiple Parameters* in this Appendix.
Gamma (GAM)	
(GAM!"gamma2.6")	The "filename" representing the current gamma. For example, "gamma2.6" is typically used in theatres. Gamma files (name and content) are all currently pre-defined. Also known as "look-up tables".

Function Code / Examples	Description and Parameters
GPIO Assignments (GIO) ***requires v2.7 or higher***	
(GIO i3 l "LampOff") (GIO i3 h "LampOn") (GIO ? I3H) (GIO ? I3h "lampon") (GIO ? I3L) (GIO ? I3l "lampoff") (GIO o3 "SystemHealth") (GIO? o3) (GIO! o3 "System Health")	Allows macros to be assigned to GPIs and GPOs. **Important!** *Changing to a 3D channel with GPIO usage will permanently delete the macro assignments for those GPIOs; therefore, it is suggested that those GPIOs used for 3D channels not be used for macros.* P1 = input # (1-5) or output # (1-5) P2 = "Macro Name" Predefined GPI macros: "LampOn" "LampOff" "DouserOpen" "DouserClosed" "AuxLensIn" "AuxLensOut" "Channel 101" through "Channel 116" Predefined GPO macros: "System Health" "Lamp State" "Douser State" "Auxiliary Lens State"
Image Scaling Enable/Disable (IMS)	
(IMS 0)	Enables or disable image scaling 0 = disable 1 = enable
Intelligent Lens System (ILS) ***requires v2.9 or higher***	
	Method of reading and writing ILS information. See *Section B.2.4 Intelligent Lens System (ILS)*
Internal Test Pattern (ITP)	
(ITP "RGB-12Bbit-Split Ramp") (ITP"")	Enter "test pattern filename" to display pattern. Enter "" to turn off the test pattern.

Function Code / Examples	Description and Parameters
Lamp Changed (LPC)	
(LPC ”60123456” 100 “CDXL-20” “Ignition Difficulty”) or (LPC “60123456” 100 “CDXL-20” 3)	Records the serial number, hours logged on lamp, lamp type and reason for change of the newly installed lamp, thus resetting the lamp time to “0” for logging time. Serial number = 32 characters max.
	Valid Lamp Types CDXL-20 CDXL-30 CDXL-45 CDXL-60 CXL-20 CXL-30 CXL-45 CXL 60 Other-16 Etc. **Valid Change Reason** (can be sent as number or text) 0 = “” 1 = “Usage Hours Exceeded 2 = “Light Level too Low” 3 = “Ignition Difficulty” 4 = “Light Unstable (flicker)” 5 = “Was Temporary Lamp” 6 = “Lamp Type Change” 7 = “Other”
Lamp History (HIS)	
(HIS! 021 00001 “1234567” 00007 “2007/08/01 15:58” “Other-20” 00000 00000 00000 000 “Usage Hours Exceeded”)	Lamp history describes lamps used in the projector. See *Messages With Multiple Parameters* in this Appendix.
Lamp Hours of Use (LPH)	
(LPH 0528)	The # hours logged on the current lamp (0-9999).
Lamp Hours Limit (LPL)	
(LPL 750)	The # hours that a lamp can be used before a warning message appears. Range=0-20000 hours.
Lamp Intensity (LPI)	
(LPI 12345)	The light output level chosen for LiteLOC. Same intensity for every channel requires LPB (Lamp Per Button) set to “OFF”. **NOTE**: *Specify desired channel with “S”. If no “S” parameter is included, the LPI setting will apply to the current channel when the “Lamp Per Channel” checkbox is enabled, and to all channels when the checkbox is cleared.*
(LPI?)	What is the current LiteLOC setting for this channel?
(LPI?s101)	What is the LiteLOC setting for Channel 101?
(LP1!12345)	The current LiteLOC setting is 12345

Function Code / Examples	Description and Parameters
LampLOC™ Module (LLM)	
(LLM000 000 0158)	**Single Parameter** 1=Calibrate stepper motors 2=Automatic Lamp alignment (LampLOC™) **Multiple Parameter** P1 = 0 (move motor) P2 = 0, 1, 2 (specifies either x, y, or z motor respectively) P3 = Destination / new motor position (-200 up to +200)
Lamp Message Enable (LME)	
(LME 0) (LME 1)	Enables or disables a lamp timer message when the lamp has exceeded its expected life. 0 = No lamp message will appear when lamp limit expires 1 = Lamp message will appear when lamp limit expires
Lamp Mode (LPM)	
	2 = Constant power 3 = Constant light intensity (LiteLOC mode) **NOTES: 1)** *Specify desired channel with "S". If no "S" parameter is included, the LPM setting will apply to the current channel when the "Lamp Per Channel" checkbox is enabled, and to all channels when the checkbox is cleared.* **2)** *Specify global parameter with "G".*
(LPM S101 2)	Changes mode for channel 101 to constant power
(LPM? G)	Requests global power mode
(LPM! G 002)	Reply to global power mode request
(LPM? S101)	Request for Chan 101 power mode
(LPM! S101 003)	Reply to Chan 101 power mode request
(LPM?) (LPM! 2000)	If Lamp per channel, reply is channel power mode, otherwise returns global power mode
Lamp Per Button (LPB)	
(LPB O) (LPB?) (LPB! 1)	0 = Off; Lamp settings will be the same for all channels. 1 = On; Lamp settings will vary according to channel. **NOTE**: *This setting determines whether lamp mode, power and intensity are the SAME for every channel (i.e., global) or DIFFERENT for each.*

Function Code / Examples	Description and Parameters
Lamp Power (LPP)	
(LPP 2000) (LPP?) (LPP!2000)	Specific power setting for the lamp in Watts Value Range = depends on the installed lamp **NOTE**: *Specify desired channel with "S". If no "S" parameter is included, the LPP setting will apply to the current channel when the "Lamp Per Channel" checkbox is enabled, and to all channels when the checkbox is cleared.*
(LPP S101 2)	Changes power value for channel 101 to 2000
(LPP? G)	Requests global power value
(LPP! G 1608)	Reply to global power request
(LPP? S101)	Request for Chan 101 power value
(LPP! S101 2000)	Reply to Chan 101 power request
(LPP?) (LPP! 2000)	If Lamp per channel, reply is channel power, otherwise returns global intensity
Lens Auxiliary (LNA) ***requires v2.7 or high***	
(LNA "1.25AN" "1234567")	P1 = Lens type Valid lens = "1.25 AN" or "1.25WC" P2 = Lens serial number
Lens Horizontal Offset (LHO) ***requires v2.9 or higher***	
(LHO 1023) (LHO 1023 -1) (LHO! 1023 -1 0)	Adjusts the horizontal offset of the output lens under motor control. **Write** P1 = Location P2 = Approach direction **NOTE**: *Approach is optional.* *(-1 = Positive to Negative Approach,* *1 = Negative to Position Approach)* **Read** P1 = Real-time position P2 = Current direction P3 = Moving Status (0 = not moving, 1 = moving) Related commands are Intelligent Lens System (ILS), Lens Vertical Offset (LVO), Focus (FCS) and Zoom (ZOM)

Function Code / Examples	Description and Parameters
Lens Primary (LNP) ***requires v2.7 or higher***	
(LNA “1.25AN” “1234567”)	P1 = Lens type P2 = Lens serial number Valid Lens: “1.25-1.45HC” “1.45-1.8HC” “1.8-2.4HC” “2.2-3.0HC” “3.0-4.3HC” “4.3-6.0HC” “5.5-8.5HC” “1.25-1.45HB” “1.45-1.8HB” “1.8-2.4HB” “2.2-3.0HB” “3.0-4.3HB” “4.3-6.0HB” “5.5-8.5HB”
Lens Vertical Offset (LVO) ***requires v2.9 or higher***	
(LVO -264) (LVO -264 -1) (LVO! -264 1 0)	Adjusts the vertical offset of the output lens under motor control. **Write** P1 = Location P2 = Approach direction **NOTE**: *Approach is optional.* *(-1 = Positive to Negative Approach,* *1 = Negative to Position Approach)* **Read** P1 = Real-time position P2 = Current direction P3 = Moving Status (0 = not moving, 1 = moving) Related commands are Intelligent Lens System (ILS), Lens Horizontal Offset (LHO), Focus (FCS) and Zoom (ZOM)
Measured Color Gamut (MCG)	
(MCG “OnSite”)	Use OnSite MCGD as the reference point for color proc.
(MCG?)	What MCGD is currently in use?
(MCG! OnSite)	Reply indicating the OnSite MCGD is in use
Ping (PNG)	
(PNG?)	Request for basic projector information which includes projector type and current software version
(PNG! 032 001 002)	Reply indicating cinema projector present (32), and its current version of software is v1.2 P1 = 32 (always—indicates a cinema projector) P2 = Major version 0-99 P3 = Minor version 0-99

Function Code / Examples	Description and Parameters
Power (PWR)	
	Turn the lamp projector OFF or ON (0=off, 1=on).
(PWR 0)	Turn the projector (lamp) OFF
(PWR 1)	Turn the projector (lamp) ON
(PWR! 000)	The projector (lamp) is OFF
(PWR! 001)	The projector (lamp) is ON
Processing Mode (PRM)	
(PRM 0)	Current processing of incoming source data. 0 = non-cinema only 1 = full cinema processing path
(PRM?)	What is the current processing path?
(PRM!001)	Cinema processing path is currently in effect
Projector Address (ADR)	
(ADR “192.168.206.10”)	Sets which projector—identified by its network address—will be controlled by the TPC upon the next re-boot. Examples might include 192.168.206.***10*** or 192.168.206.***11***, etc. Valid IP addresses depend on the site.
(ADR?)	Which projector (I.P. address) is controlled by the TPC?
(ADR!“192.168.206.10”)	Projector 192.168.206.10 is controlled by the TPC.
Projector Configuration File (PCF)	
(PCF “TPC1”)	Use this pre-defined projector configuration file (PCF “filename”) for processing. This file contains TCGD, CSC, LUT-AL, LUT-DG, LUT-CLUT, and SOURCE information.
(PCF?)	What pre-defined processing file is currently in effect?
(PCF! “TPC1”)	The TPC1 pre-defined proj. configuration file is in use
Projector Hours of Use (PJH)	
(PJH?)	The number of hours that the projector has been used (incl. standby and without a lamp) How many hours have been logged on the projector?
(PJH!5672)	Maximum=16,777,215 hours
Projector Rental Hours (PRH)	
(PRH?)	How long has the projector been running with the *lamp on*?
(PRH!1251)	Proj. has run 1251 hours with the *lamp on*
Pull-Down Offset (PDO) ***requires v2.7 or higher***	
(PDO 2)	0= field offset to 1 1= field offset to 2 2 = field offset to 3 3 = field offset to 4 4 = field offset to 5
(PDO?) (PDO! 002)	Request field offset Response indicating field 3 offset

Function Code / Examples	Description and Parameters
Pull-Down Sequence (PDS) ***requires v2.7 or higher***	
(PDS 0) (PDS 1) (PDS ?) (PDS! 000)	0 = 2:2 Pull-down 1 = 3:2 Pull-down Request current pull-down Reply indicating 2:2 pull-down
Save (SAV)	
(SAV)	Immediately save all changes to flash memory rather than waiting for eventual auto save or a power down.
Screen Format (SCF)	
(SCF “filename”)	Selects a custom or standard screen file stored in the TI head. Use this screen format file (stored in projector memory).
(SCF?)	What is the current screen format?
(SCF!”1920x1080”)	Current screen format filename is 1920x1080
Screen Orientation (SOR)	
(SOR 0)	Sets the position of the projector relative to the screen 0= Front 1= Rear 2=Inverted Front 3=Inverted Rear
(SOR?)	What is the current screen orientation setting?
(SOR!0)	Current screen orientation is normal front position
Select Input (SIN)	
(SIN 0)	Select which projector (P1) and input (P2) to use. P1 = Input 0= Input A (SMPTE/cinema) 1= Input B (SMPTE/cinema) 2= Dual SMPTE/cinema 3= DVI-A (non-cinema) 4= DVI-B (non-cinema) 5 = DVI Twin 6 = CineIPM input on DVI-A 7 = CineIPM input on DVI-B 8 = CineIPM input on DVI-Twin (10-bit) 9 = CineIPM channel on DVI-A 10 = CineIPM channel on DVI-B 11 = CineIPM channel on DVI-Twin (10-bit) P2 = required for P1 = 6, 7 The input number (1-8) or channel number (1-25) of CineIPM. Available for P1= 6 and P1 = 11 only. The above will change the input on the selected channel only (1 - 16). To change the input on a different channel, the source number must be used in front of the parameter that is used. (SIN s1 1) changes channel one input to 292B.

Function Code / Examples	Description and Parameters
Simple Network Management (SNM) ***requires v2.7 or higher and TPC 60/66***	
	Used for simple network management protocol setup
(SNM 0 “trap IP address”)	To disable specify “0.0.0.0”
(SNM 1 OID)	OID is either 11273 or 25766
Select Source Format (SRF)	
(SRF “filename”)	Select the stored source file defining incoming resolution and desired aspect ratio for the current display.
(SRF?)	What is the current source format?
(SRF!”1280x1024square”)	Current source format filename is 1280x1024square.
Shutter Control (SHU)	
(SHU 0) (SHU 1)	Open or close the electronic “quick douser” 0 = shutter open 1 = shutter closed
Source Change (SRC)	
	Same as CHA command
Stop TI Communication / Terminate TPC Application (STP)	
	0 = Start TI communication 1 = Stop TI communication 2 = Terminate TPC application 3 = Reboot TPC
System Status (SST)	
	Method of reading projector information. See *Messages With Multiple Parameters* later in this Appendix.
Target Color Gamut (TCG)	
(TCG “filename”)	Select the stored target color gamut file to apply to the current display.
(TCG?)	What TCGD is currently in use?
(TCG!P7V2)	The P7V2 TCGD is in use
3D Controls (TDC)	
(TDC 1) (TDC 10 420)	Turn 3D controls ON/OFF or sets specific 3D controls Example shown: Set dark time to 420µs For all other 3D controls, see *Messages With Multiple Parameters* later in this Appendix.
Time & Date (TMD)	
(TMD 2003 08 13 14 21 00) (TMD! 2003 08 13 14 21 00)	Set/read the time and date in the projector’s real-time clock. P1 = Year (yyyy) P2 = Month (01-12) P3 = Date (1-31, day of month) P4 = Hour (0-23, 24hr clock) P5 = Minute (0-59) P6 = Second (0-59)

Function Code / Examples	Description and Parameters
User ID (UID)	
(UID “JSMITH” “PassWord”)	Allows remote access to a projector where a specific user name and password is set up and required. **NOTE**: This command is only necessary when the remote access setting in the projector is set to *login required*. P1 = User Name (e.g., JSMITH — case insensitive) P2 = Password (e.g., PassWord — case insensitive)
Virtual Network (VNC) ***requires v2.7 or higher and TPC 60/66***	
(VNC 1)	Start VNC server **NOTE***: Should only be used for training*
(VNC 0)	Reboots TPC
Zoom (ZOM) ***requires v2.9 or higher***	
(ZOM -1264) (ZOM -1264 -1) (ZOM! -1264 -1 1)	Changes the zoom setting of the lens under motor control. **Write** P1 = Location P2 = Approach direction **NOTE**: *Approach is optional (-1 = Positive to Negative Approach, 1 = Negative to Position Approach)* **Read** P1 = Real-time position P2 = Current direction P3 = Moving Status (0 = not moving, 1 = moving) Related commands are Intelligent Lens System (ILS), Lens Horizontal Offset (LHO), Lens Vertical Offset (LVO), and Focus (FCS)

For single-parameter functions listed in **Table B.1**, you can determine the parameter's range with the request message (**`ASCIICODE?M`**).

For example:

`(LPL?M)` What is the minimum and maximum lamp limit?

`(LPL!M000 5000)` Minimum lamp limit = 0, maximum lamp limit = 5000

If a function code has multiple parameters (see *B.2 Messages with Multiple Parameters*), their ranges cannot be requested.

B.2 Messages with Multiple Parameters

Certain messages are more complex and require multiple parameters in order to relay complete information. These messages are described in detail below.

B.2.1 Error Messages (ERR)

An error message is generated by the projector/TPC, and contains a numerical error code, a message specifier (i.e., type of error, such as "**`System Error`**"), and a text explanation of the error. In addition, "**`System Error`**" and "**`System Warning`**" error messages also include further explanation of the nature of the error, such as its location and cause. **NOTE:** *The type of error and text parameters are enclosed together in quotation marks, separated by a colon and space. In the table below, the text explanation appears as -----.*

Table B.2 Error Messages

Error Code (P1)	Type of Error (P2)	Meaning
001	"System Error: -----"	"System critical error.
002	"System Warning: -----"	"System error.
003	"Invalid parameter-"	"Invalid parameter number.
004	"Too many parameters"	"Message requires fewer parameters
005	"Too few parameters"	"Message requires more parameters
006	"Source does not exist"	"The source # is wrong
007	"Could not be executed"	"Current content prevented the command from executing.
008	"Checksum error"	"The checksum is incorrect.
009	"Unknown request"	"Message code undefined. If the message sent as a command it is ignored and no error is returned.
010	"Communication error"	"Error receiving serial data on one of the RS-232 ports.

Additional Parameters for "001" System Errors and "002" System Warnings

"System Error" and "System Warning" error messages include two additional parameters (P3 and P4), which further describe the error. P3 indicates what component or system is involved (such as interlocks, fans, temperature, SSM communication, or a lamp failure) and P4 relays the specific condition detected at the suspect component, such an over-temperature reading or a slow fan speed reading-note these values indicate temperature or fan speed only. See **Table B.3**, **Table B.4**, and **Table B.5**.

When a system error is resolved and is no longer present, another message reports this by replacing the first digit in the original P3 error code with a "1".

Table B.3 P3 Codes for "001" System Error Messages"

Component Code (P3)	Component
1	Interlock, Lamp Fan
2	Interlock, Extractor (exit duct to outside world)
3	Interlock, Lamp Door Open
4	Interlock, Auxiliary
5	Interlock, Card Cage Tamper Interlock
8	Fan, Intake 1 (non-operator's side of projection head)
9	Fan, Intake 2 (non-operator's side of projection head)
10	Fan, Card Cage
11	Fan, LAD (laminar airflow device near light engine)
12	Fan, Ballast
16	Prism Over temperature
17	DMD Red Over temperature
18	DMD Blue Over temperature
19	Integrator Over temperature
20	SSM (System Supervisor Module) Over temperature
21	Card Cage Over temperature
22	Ballast Over temperature
32	Lamp Life Expired
33	Lamp Failed to Strike
35	Unexpected Lamp Failure / Off
36	Reading Lamp Intensity Failed
48	SSM, Communication Failure (System Supervisor Module)
48	SSM, Upgrade Failed
68	1^2C Communication Failure

Examples of Critical System Error (001) Messages

(65535 01002 ERR 001 "**System Error: 0008 00001 Fan, Intake 1**")

(65535 01002 ERR 001 "**System Error: 000A 00001 Fan, Card Cage**")

(65535 01002 ERR 001 "**System Error: 0021 00001 Lamp, Failed to Ignite**"

Table B.4 P3 Codes for "002" System Warning" Error Messages

Component Code (P3)	Component
8010	Prism, Temperature Warning
8011	Temperature, DMD Red
8012	Temperature, DMD Blue
8013	Temperature, Integrator
8014	Temperature, SSM
8015	Temperature, Card Cage
8016	Temperature, Ballast
8020	Lamp, Life Expired
8021	Lamp Failed to Ignite
8032	SSM Read Failed
8033	SSM Flash Write Attempted
8034	Motor Calibrate Failed

NOTE: *System Warning messages can elevate to System Error messages if the problem is not fixed. In these cases, the "8" in the original System Warning code will change to a "0" (see* **Table B.3***).*

Table B.5 P4 Codes (INCLUDED WITH SYSTEM WARNING ERROR MESSAGES ONLY)

Examples (P4)	Meaning
1500 (or lower)	Fan speed is 1500 RPM. Speed must be 1501 RPM or higher.
056 (always °C)	Temperature is 56°. Cool to within ranges shown in Table 3.1.
00001	There is no P4 data for this type of error

Examples of System Warning (002) Error Messages

(65535 01002 ERR 002 "**System Warning: 8010 00051 Prism, Temperature Warning**")

(65535 01002 ERR 002 "**System Warning: 8020 00001 Lamp, Life Expired**")

(65535 01002 ERR 002 "**System Warning: 8032 00001 SSM Read Failed**")

B.2.2 For Your Information (FYI)

FYI messages are generated and broadcast when an overall change in the projector's status is detected. Each FYI message identifies the IP address of the TPC generating the message, followed by a code for the change as well as one or more parameters of descriptive details about what has changed.

NOTES: **1)** *Because FYI messages are gated by the Error Message Enable (EME) control, disabling serial error message also disables FYI messages.* **2)** *FYI messages do not occur unless there is a Cine-IPM present.*

B.2.3 History (HIS)

A number of lamp histories are stored in memory, with the oldest discarded when there is no more room. An accurate lamp history requires that the serial # for a new lamp be recorded when the lamp is installed. HIS message parameters are:

- P1 = Lamp order (oldest lamp installed = 001, next oldest = 002, etc.)
- P2 = # of hours logged
- P3 = Lamp serial #
- P4 = # strikes
- P5 = Installation date & time
- P6 = Lamp type
- P7 = Status Failed to Strike
- P8 = Status Failed Restrike
- P9 = Status Unexpected Offs
- P10 = Life State
- P11 = Change Reason

B.2.4 Intelligent Lens System (ILS)

P1	P2	Return Value
0 = Installed 1 = Lens Reset on Startup 2 = Auto ILS 3 = Lens Calibrate 4 = Lens Reset	0 = No, 1 = Yes 0 = No, 1 = Yes 0 = No, 1 = Yes None None	0 = No, 1 = Yes 0 = No, 1 = Yes 0 = No, 1 = Yes 0 = Complete, non-zero indicates In Progress 0 = Complete, non-zero indicates In Progress
10 = Move All Motors **NOTE:** *This command should be used to move all motors at the same time. It is more efficient then using LHO (Lens Horizontal Offset), LVO (Lens Vertical Offset), FCS (Focus), and ZOM (Zoom).*	P2 = 'X' location P3 = 'Y' location P4 = 'Focus' location P5 = 'Zoom' location P6 = 'X' approach P7 = 'Y' approach P8 = 'Focus' approach P9 = 'Zoom' approach **NOTE:** *Approach is optional. When no approach is specified, a Negative to Positive Approach is assumed.* *-1 = Positive to Negative Approach* *1 = Negative to Positive Approach*	This is write only command.

Examples of ILS Commands

ILS Command	Result
(ILS 0 1)	Sets ILS installed to Yes
(ILS 1 1)	Sets Lens Reset on Startup to Yes
(ILS 2 1)	Sets AutoILS to Yes
(ILS 3)	Invokes Lens Calibration
(ILS 4)	Invokes Lens Reset
(ILS 10 1023 -264 800 -1248)	Moves all four motors to the specified offset, focus and zoom locations. Approach goes from negative to positive.
(ILS 10 1023 -264 800 -1248 - 1 1 1 -1)	Moves all four motors to the specified offset, focus and zoom locations. Approach is specified for all four motors.

B.2.5 System Status (SST)

The SST message provides a variety of information about the current state of the projector. The single broad-ranging request (**`SST?`**) for all information triggers the return of a series of replies as if multiple requests had been sent. In each of these replies, P1 explains the general content or topic of that reply, and P2 the individual details. To obtain status for one topic only, specify the desired P1 parameter corresponding to that topic-for example, the request (**`SST?0`**) will trigger general projector information only. For a specific single-status inquiry, include both P1 and P2 in the request-for example, (**`SST?4 3`**) asks what version of SSM main software is installed.

Table B.6 System Status Messages

P1	P2	Notes
If P1 = 0 General Projector Configuration	0 = Model 1 = Serial Number 2 = Build Date 3 = Native Resolution 4 = N/A 5 = Lamp Power/Lamp Type 6 = Lamp Ballast I.D. (v 2.4c and up) 7 = Interface Board Serial # 8 = Processor Board Serial # 9 = Processor Board Type 10 = Interface Board Type 11 = Formatter Interface Type 12 = Formatter Board Type 13 = TPC Type 14 = ILS Board Serial Number	

P1	P2	Notes
If P1 = 1 System Status	0 = Power Status (0=Off, 1=On) 2 = LiteLOC™ (0=Off, 1=On) 3 = Lamp Expiry 4 = Lamp Hours 5 = Total Lamp Hours 7 = Projector Hours 8 = Shutter (0=Off, 1=On) 20 = Lamp Current 21 = Lamp Voltage 22 = Lamp Power 23 = Approximate foot lamberts	
If P1 = 2 Signal Information	0 = Signal Status (0=OK, 2=invalid) 1 = Channel # 2 = Vertical Frequency 3 = Test Pattern (0=Off, >0=On)	Good or bad signal Current channel (101-132) Current vertical frequency
If P1 = 3 Operation Status	2 = Lamp Error 10 = Card cage temperature 11 = Blue DMD temperature 12 = Red DMD temperature 13 = Integrator temperature 14 = Prism temperature 15 = SSM temperature 16 = ILS temperature 20 = Lamp vane switch interlock 21 = Extractor vane switch interlock 22 = Lamp door interlock 23 = Auxiliary interlock / High current 24 = Tamper switch 30 = Intake fan #1 (rear) speed 31 = Intake fan #2 (front) speed 32 = Card cage fan speed 33 = LAD fan speed 40 = SmpteATotalErr 41 = SmpteARecentErr 42 = SmpteBTotalErr 43 = SmpteBRecentErr 50 = SecurityInstalled 51 = SecurityArmed 52 = SecurityTamper 53 = CompLidOpen 54 = NonCompLidOpen 55 = CommFailure 56 = BatteryLow	0=OK, 1=Unexpected lamp OFF, 2=Lamp failed to ignite °C. Shows caution or critical °C. Shows caution or critical °C. Shows caution or critical °C. Shows caution or critical °C. Shows caution or critical °C. Shows caution or critical °C. Shows caution or critical (0 = OK, 1 = open) (0 = OK, 1 = open) (0 = OK, 1 = open) (0 = OK, 1 = open) (0 = OK, 1 = open) RPM. Also indicates "slow" or "failed" condition. " "

P1	P2	Notes
If P1 = 4 Versions	0 = Touch Panel (Main) 1 = Touch Panel (Language) 2 = Touch Panel (Operating System) 3 = System Supervisor Module (Main) 4 = System Supervisor Module (Boot) 5 = System Supervisor Module (HW) 6 = Ballast Interface (SW) 7 = Ballast Interface (HW) 8 = ILS - Main 9 = ILS - Boot 10 = ILS - HW 20 = Engine 21 = Interface (ARM Boot) 22 = Interface (ARM Main) 23 = Interface (FPGA) 24 = Interface (PIC) 25 = Processor (DSP Boot) 26 = Processor (DSP Main) 27 = Processor (DSP Diag.) 28 = Processor (DSP FPGA) 29 = Formatter Interface (Hitachi) 30 = Formatter Interface (FPGA) 31 = Formatter Interface (PROM) 34 = EFIB Main 35 = EFIB FPGA 36 = EFIB Boot 37 = EFIB Sequence 40 = Formatter Red (Boot) 41 = Formatter Red (Main) 42 = Formatter Red (Config) 43 = Formatter Red (Gamma) 44 = Formatter Red (Sequence) 50 = Formatter Green (Boot) 51 = Formatter Green (Main) 52 = Formatter Green (Config) 53 = Formatter Green (Gamma) 54 = Formatter Green (Sequence) 60 = Formatter Blue (Boot) 61 = Formatter Blue (Main) 62 = Formatter Blue (Config) 63 = Formatter Blue (Gamma) 64 = Formatter Blue (Sequence)	Indicates version detected in projector.

P1	P2	Notes
	70 = FFIB Main 71 = FFIB Boot 72 = FFIB FPGA Main 73 = FFIB FPGA Boot 74 = FFIB Startup FPGA 75 = FFIB Satellite FPGA 76 = FFIB Sequence Data 77 = FFIB DMD Data	
If P1 = 5 Self Test	0 = Interface Board 1 = Processor Board 2 = N/A 3 = System Supervisor Module (SSM) 4 = ILS Motor Control 10 = Space remaining on TPC? IPSM 11 = Space remaining on TPC Storage Card 12 = Space remaining in TPC memory	For any test, 0=OK, 1=failed 0 = Ok, Non-zero = failed KB KB KB

B.2.6 3D Controls (TDC)

A number of 3D controls enable setup and adjustment of incoming 3D source material. Parameter P1 activates the specific control, and P2 sets the desired adjustment.

P1	P2
0 = Disable 3D	n/a
1 = Enable 3D	n/a
2 = Frame Rate Multiplication	If L/R input reference is 0, 1, 4, 5, 6, or 7 (rare): 0 = 4:1 1 = 5:1 2 = 6:1 If L/R input reference is 2 or 3 (typical): 0 = 4:2 1 = 5:2 2 = 6:2 Use number directly 11=1:1 21=2:1 ... 61=6:1 22=2:2 ... 62=6:2
3 = L/R Input Reference	0 = Use assigned GPI (true polarity) 1 = Use assigned GPI (inverted polarity) 2 = Left on Port A, Right on Port B 3 = Left on Port B, Right on Port A 4 = White Line Code (true polarity) 5 = White Line Code (inverted polarity) 6 = Blue Line Code (true polarity) 7 = Blue Line Code (inverted polarity)

P1	P2
4 = Input Frame Dominance	0 = Left (L1 R1 L2 R2) 1 = Right (R1 L1 R2 L2)
5 = L/R Input Frame Reference GPI	0 = None 1 - 7 = GPI1 - GPI7
6 = L/R Display Reference	0 = None / not used 1 = Use assigned GPI (true polarity) 2 = Use assigned GPI (inverted polarity)
7 = L/R Display Reference GPI	0 = None 1 - 7 = GPI1 - GPI7
8 = L/R Output Reference Polarity	0 = True 1 = Inverted
9 = L/R Output Reference GPO	0 = None 1 - 7 = GPO1-GPO7
10 = Dark Time	0 - 4500 µs
11 = Output Sync Delay	0 - 200 µs

Appendix C: Serial Communication

This section explains how to link the projector to serial communication devices.

- *C.1 Serial Links to Projector*

C.1 Serial Links to Projector

C.1.1 Standard RS-232 Devices

From a PC, connect a standard 9-wire RS-232 serial cable (CTS/RTS) to the serial communication panel port labeled **RS-232A** on the Source and Communication Connection Panel located on the underside of the projection head near the front.

Note that a serial link is adequate for *DCP Librarian* use, or for downloading new main software (both tasks require a qualified Christie service technician). It cannot be used for ASCII messaging (since the TPC recognizes Ethernet only), and is too slow for servers.

C.1.2 Cine-IPM 2K

Connect the *Cine-IPM 2K*'s custom RS-232 cable from the rear of the *Cine-IPM 2K* to the serial communication panel port labeled **RS-232B** on the *Source and Communication Connection Panel* located on the underside of the projection head near the front. The **RS-232B** port uses Christie-proprietary protocol and is compatible with Christie accessories only.

Linking the *Cine-IPM 2K* to the **RS-232B** port enables *Cine-IPM 2K* sources to be selected at the TPC.

IMPORTANT! *Do not use RS-232B port with other devices.*

Refer to **Figure 2-28 Tilt Projector to Match Screen, on page 2-19** for serial port locations. Access from within the pedestal.

Appendix D: GPIO System Integration

This section explains how to use a GPIO link from the projector to external equipment such as devices for 3D synchronizing.

D.1 The GPIO Port

The 37-pin GPIO connector is located on the *Source and Communication Panel* located on the underside of the projection head near the front. It provides a flexible method of interfacing a wide range of external I/O devices to the projector, often so that an event on one device automatically triggers an event on the other. The pins on this connector that are configurable using the TPC's **Custom 3D Control** menu are identified in **Figure D-1**.

NOTES: 1) *Pins not shown in* **Figure D-1** *are reserved for other uses, and cannot be specified at the TPC.* **2)** *Cable access is through the pedestal "toe" at front.*

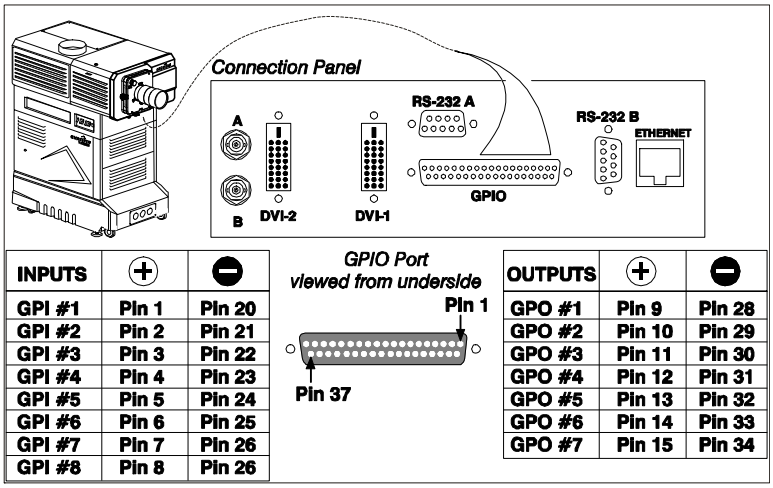

INPUTS	+	−
GPI #1	Pin 1	Pin 20
GPI #2	Pin 2	Pin 21
GPI #3	Pin 3	Pin 22
GPI #4	Pin 4	Pin 23
GPI #5	Pin 5	Pin 24
GPI #6	Pin 6	Pin 25
GPI #7	Pin 7	Pin 26
GPI #8	Pin 8	Pin 26

OUTPUTS	+	−
GPO #1	Pin 9	Pin 28
GPO #2	Pin 10	Pin 29
GPO #3	Pin 11	Pin 30
GPO #4	Pin 12	Pin 31
GPO #5	Pin 13	Pin 32
GPO #6	Pin 14	Pin 33
GPO #7	Pin 15	Pin 34

Figure D-1 GPIO Connector Pinouts

As shown above, each available pairing of pins (+/–) is defined as either an ***input*** or ***output***.

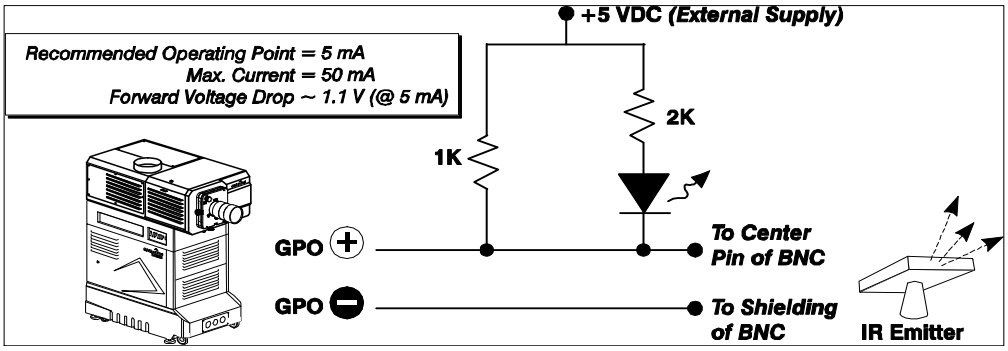

Figure D-2 Circuit for Power Supply

If you are wiring your own GPIO cable for use with a server or 3D device such as an IR emitter or a polarizer, follow the circuit diagram in **Figure D-2**.

D.1.1 Example: GPIO and 3D Device

1. Assemble a cable according to guidelines shown in **Figure D-1** and **Figure D-2**.
2. Connect the cable to projector's GPIO port and to your 3D device.
3. In the TPC's **Custom 3D Control** menu, set **Output GPO** according to the pins wired in the GPIO cable (see **Figure D-1**). For instance, if you have wired pins #10 (+) and #29 (-) to your 3D device, set **Output GPO** to GPO #2.

Appendix E: Repacking the Projector

If you need to relocate or ship the projector, repack the pedestal and the projection head with the original packing materials used for shipping.

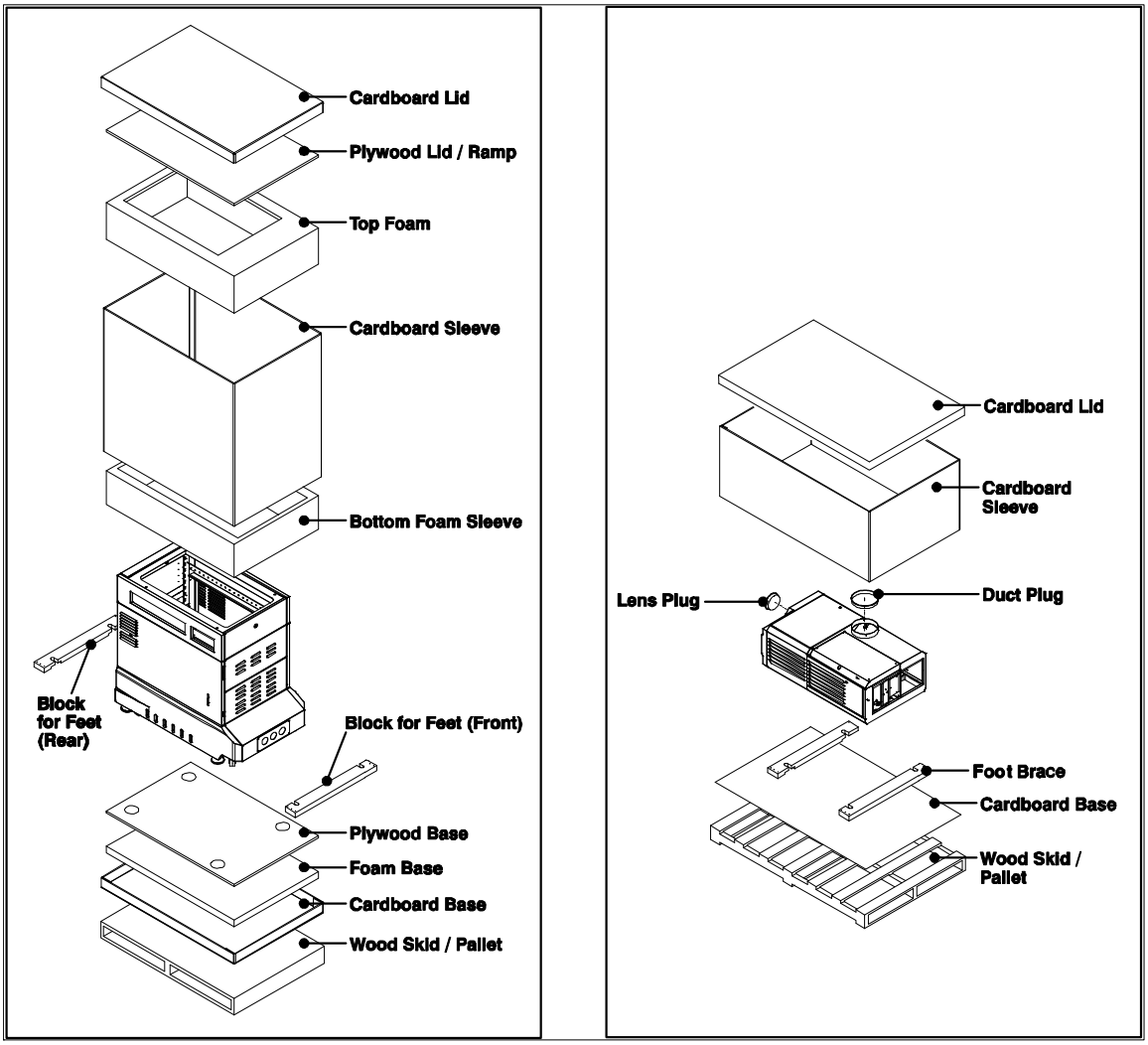

Figure E-1 Packing the Pedestal and Projection Head