USA's primary source for projector lamps

myprojectorlamps

PROJECTOR OWNER'S MANUAL

Boxlight

TRAVELIGHT

Need a replacement lamp for this projector?

www.myprojectorlamps.com

Original manufacturer manual, provided unmodified as a courtesy of MyProjectorLamps.com.
All trademarks belong to their respective owners.

BOXLIGHT®

Presenting a Better Way

www.boxlight.com

800.762.5757

User's Manual

TraveLight

Safety

These safety precautions include information to prevent personal injury and damage to the projector.

Safety Definitions

WARNING:

Statements identify conditions or practices that could result in personal injury.

CAUTION:

Statements identify conditions or practices that could result in damage to your equipment.

Projector Safety

WARNING:

- Please use the power cord provided. Connect the power cord to a receptacle with a protective safety (earth) ground terminal.
- Don't look directly into the lens when the lamp is on. Doing so may cause eye injury.
- Servicing your own projector may expose you to hazards or create potential hazards. Also, servicing your own projector will void the warranty. Refer all service to qualified service personnel.
- Do not loosen or remove any screws other than those on the lamp module cover and the lamp module. Doing so may result in electric shock.
- For information about use of a feature, please refer to this *User Guide.*
- Hot surface. Do not touch.

CAUTION:

- Proper ventilation is important. Don't block ventilation openings. Never operate this projector in an enclosed area. Do not place the projector on a tablecloth or other soft covering that may block the vents. With ceiling installations, use approved mounting hardware. Do not put the projector near heaters, air cleaners, transformers or other electrical devices. For permanent installations follow local codes.
- Don't set liquids on the projector. Spilled liquids may damage your projector.
- Don't put the projector on a hot surface or in direct sunlight.
- Do not drop the projector.

Lamp Safety

WARNING:

- To replace the lamp, turn off the power and unplug the power cord. To avoid burns, wait 45 minutes before opening the lamp door. Follow all instructions provided in this *User's Guide*. See "Changing the Lamp Module" on page 34.
- When you open the lamp module door, be careful not to touch the hot surfaces inside.
- In the unlikely event of the bulb rupturing, thoroughly clean the area behind the projector and discard any items that might have been contaminated with broken glass.

CAUTION:

- Never operate your projector without the lamp module or lamp module door. Doing so may damage the projector.
- Do not touch the glass portion of the new lamp module with your hands or allow it to touch other objects as this may damage it and shorten its operational life.
- Do not drop the lamp module as the glass may shatter.

Battery Safety

Read and follow all warnings and instructions supplied by the battery manufacturer.

WARNING: Keep batteries away from children.

CAUTION:

- Store batteries in their original packaging.
- When inserting batteries, verify that the (+) and (-) terminals are aligned correctly.
- Replace all batteries of a set at the same time.
- Do not mix new batteries with used ones.
- Do not use batteries of different chemistries, capacities, brands or sizes together. Leakage could result.
- Do not disassemble, recharge, or short-circuit batteries.
- Do not subject batteries to high temperature or fire.
- Discard used batteries according to all applicable local and national regulations.

Laser Safety

WARNING:

To reduce the risk of injury to the eyes, do not look directly into the laser light emitted from the aperture on the Remote Control and do not point the laser light into anyone's eyes. This remote control is equipped with a Class IIIA laser that emits radiation.

NOTE:

Do not leave the remote control close to the cooling fan outlet of the projector.

FCC Warning
This equipment has been tested and found to comply with the limits for a Class B digital device, pursuant to part 15 of the FCC rules. These limits are designed to provide reasonable protection against harmful interference when the equipment is operated in a commercial environment. This equipment generates, uses and can radiate radio frequency energy and, if not installed and used in accordance with the instruction manual, may cause harmful interference to radio communications.

Operation of this equipment in a residential area is likely to cause harmful interference in which case the user will be required to correct the interference at his own expense.

Canada
This class B digital apparatus complies with Canadian ICES-003.

Cet appareil numérique de la classe B est conforme à la norme NMB-003 du Canada.

Safety Certifications
UL, CUL, TUV

EN 55022 Warning
This is a Class B product. In a domestic environment it may cause radio interference, in which case the user may be required to take adequate measures. The typical use is in a conference room, meeting room or auditorium.

Declaration of Conformity
We declare under our sole responsibility that the DLP Zoom Digital
Projector conforms to the following directives and norms:
Directive 89/336/EEC, Amended by 93/68/EEC
EMI: EN 55022 (1992) Class B
EMC: EN 50082-1 (1992)
EMC: EN 55024 : 1998
IEC61000-4-2, IEC61000-4-3, IEC61000-4-4, IEC61000-4-5,
IEC61000-4-6,IEC61000-4-11
Directive 73/23/EEC, Amended by 93/68/EEC
Safety: EN 60950: 2000, IEC 60950 Third edition, UL 60950 Third edition
Apr. 2001

Taiwan BSMI.

Disclaimer
The manufactory or reseller shall not be reliable for technical or editorial errors or omissions contained herein; nor or incidental or consequential damages resulting from furnishing this material, or the performance or use of this product.

In the interest of continuing product improvement, the manufactory or reseller reserves the right to change product specifications without notice. Information in this document may change without notice.

No part of this document may be copied, reproduced, or transmitted by any means, for any purpose without prior written permission from copy owners.

© Copyright Dec. 2002. All rights reserved

Table of Contents

Safety 2
- Safety Definitions 2
- Projector Safety 2
- Lamp Safety 3
- Battery Safety 3
- Laser Safety 3

Preface 7

Package Contents 7

Optional Accessories 7

Accessories Overview 8
- Power Cord 8
- Computer and Video Cables 8
- Others 8

Product Profile 9
- Front View 9
- Rear View 9
- Bottom Panel 9
- LED Indicator & Control Pad on Projector 10
  - LED Indicators Message 10
  - Control Pad Function 10
- Remote Control Instruction 11

Installation Steps 13
- Getting Started 13
- Connecting the Projector 13
- Connecting Input and Output Devices 14
- Starting the Presentation 15
  - Power on 15
  - Turn on the source 15
- Adjustment 16
  - Adjusting Projector Angle 16
  - Adjusting the Zoom and Focus 16
  - Adjusting the Keystone Control 17
  - Adjusting the Zoom and Pan 17
- Power Off 18
- Restart 18

On-Screen-Display Menu Format and Description 19
- Input Source OSD 19
- Ezkey OSD 20
- Remote Control Buttons OSD 20
- OSD Menu 21
  - Main Menu 21
  - Setup Menu 22
  - Color Manager Menu 23

ENGLISH

Language Menu 24
Utilities Menu 24
Status Menu 25
Reference 26
Positioning the Projector 26
Remote Control Transmission Range 28
Product Specification 29
Timing Charts 30
Troubleshooting 31
Power Indicator 31
Remote Control 31
Sound 31
Image Source 32
Image Quality 32
Lamp 33
Maintenance 34
Changing the Lamp 34
Changing the Battery of Remote Control 35
Cleaning 36
Cleaning the Projection Lens 36
Cleaning Exterior Case 36
Cleaning the Projector 36
Customer Support 37

Preface

Congratulations on purchasing a DLP™ (Digital Light Processing) projector.

The micro portable projector uses the Digital Light Processing (DLP™) technology along with a built-in image manager. DLP ™ technology by Texas Instruments offers crystal clear images with superior quality. A built-in image manager provides alternative settings for users to optimize image quality. In addition, easy-to-use enhanced features, such as digital zoom, keystone correction, wide-angle image and picture in picture, offer the users with versatility and control functions.

In only minutes you can have your DLP Digital Projector ready to go. Just connect simply the projector to an image source, Computer, DVD, VCR., or HDTV. or Digital Camera.

ENGLISH

Package Contents

Make sure that all of the following components are included in the package. If anything is missing, please contact your dealer immediately.

- DLP Projector with lens cap
- Standard Accessories:
  - Power Cord
  - Remote Mouse Cable with USB Connector
  - S-Video Cable
  - Computer Cable: DVI to D-Sub 15 pin VGA Cable
  - Audio Cable: Stereo Min Jack to RCAx2 (Red & White)
  - Remote Control, including two AAA Batteries
  - Wizard CD, including User's Guide in PDF format)
  - Quick Start Guide
  - Carrying Case

Optional Accessories

The following cables are not standard accessories of this package. You are suggested to contact your dealer whenever you need.

- Composite Video Cable
- Component Video Cable: DVI-I to HDTV
- Audio Cable: Stereo to Stereo
- DVI Cable: DVI to DVI signal cable for computer with DVI graphics card

☐ **Save the original box and all packing materials for further shipping needs.**

Accessories Overview

Power Cord

There are four different power cords for options, US type, UK type, Euro type and China type. The appropriate Power Cord is included according to your geograhical location & safety requirement. If the standard kit does not satisfied your needs, then please contact your dealer for further service.

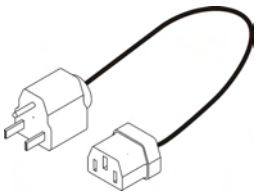
Power Cord
(US type)

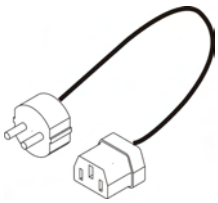
Power Cord
(UK type)

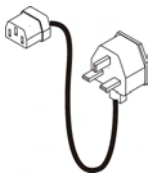
Power Cord
(Euro type)

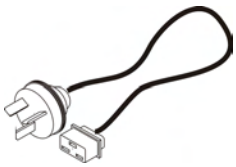
Power Cord
(China type)

Computer and Video Cables

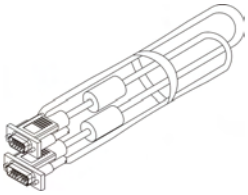
Computer Cable
DVI-I to DB-15 pin
VGA)

Remote Mouse Cable
with USB Connector

S-Video Cable

Audio Cable
Stereo Mini Jack to
RCAx2

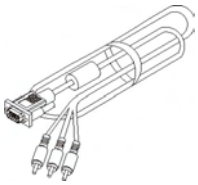
Component Video
Cable (DVI-I to
HDTV)

Composite Video
Cable

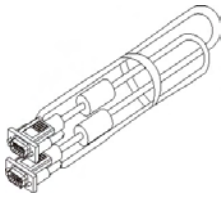
DVI-DVI signal cable
(for computer with
DVI graphic cards)

Audio Cable
Stereo to Stereo

Others

Carrying Case

Remote Control with 2
AAA Batteries

Wizard CD

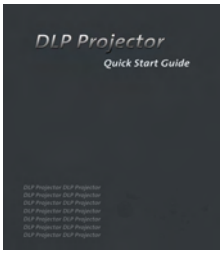

Quick Start Guide

Product Profile

Front View

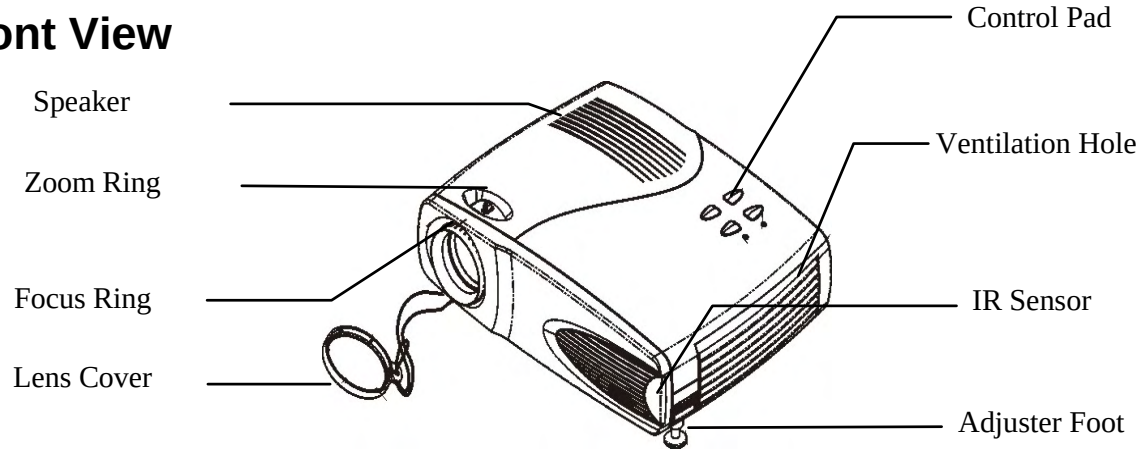

Rear View

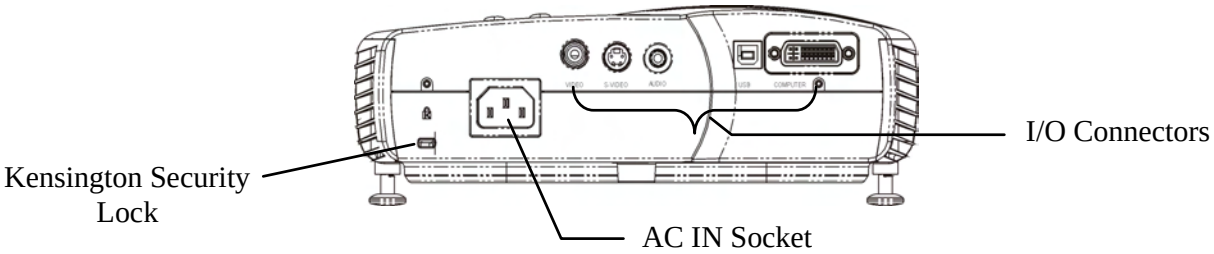

Bottom Panel

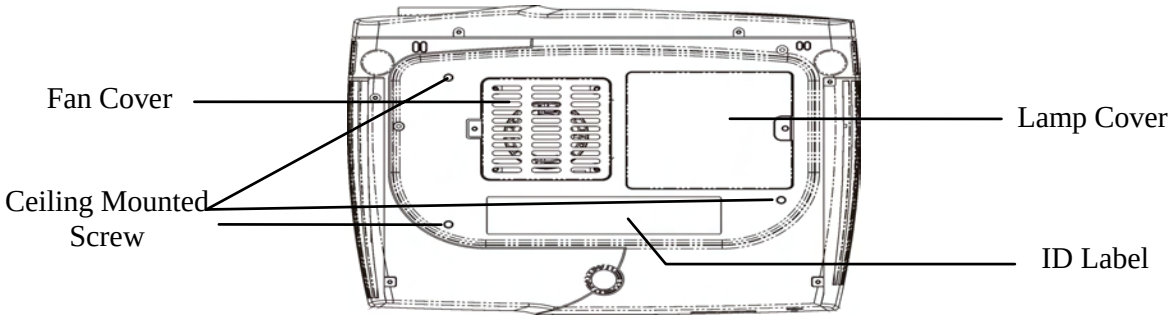

NOTE:

- With ceiling installations, use approved mounting hardware & M4 screw.
  Min. distance from ceiling/rear wall: 30/50 cm, 12/20 inch for proper ventilation.
  For permanent installations, follow local codes.

- The security lock corresponds to Kensington's MicroSaver Security System. If you have any comment, contact : Kensington, 2853 Campus Drive, San Mateo, CA94403, U.S.A. Tel: 800-535-4242, http: www.kensington.com.

ENGLISH

LED Indicator & Control Pad on Projector

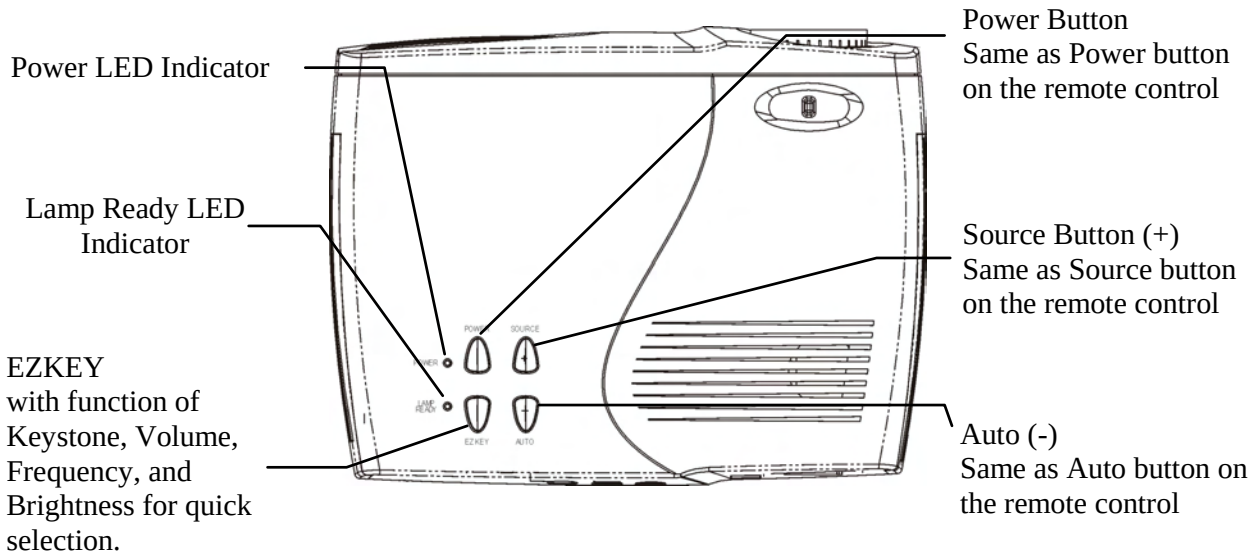

LED Indicators Message

Status	Power LED Indicator Green Color	Lamp Ready LED Indicator Orange Color
Plug in Power Cord	Steady light	Steady light
Power on without source	Blinking light	Light off
Power on with active source	Steady light	Light off
Power off in cooling stage	Steady light	Flashing light
System warming up	Flashing light	Light off

Control Pad Function

Description	Function
Power	Power on / off
EZ Key	Quick adjustment on Keystone, Frequency, Volume, and Brightness by repeatedly pressing to scroll through these functions.
Source (+)	Input Source selection, (+) to perform adjustment increasingly in EZ-Key function
Auto (-)	Auto Image (-)to perform adjustment decreasingly in EZ Key function

Remote Control Instruction

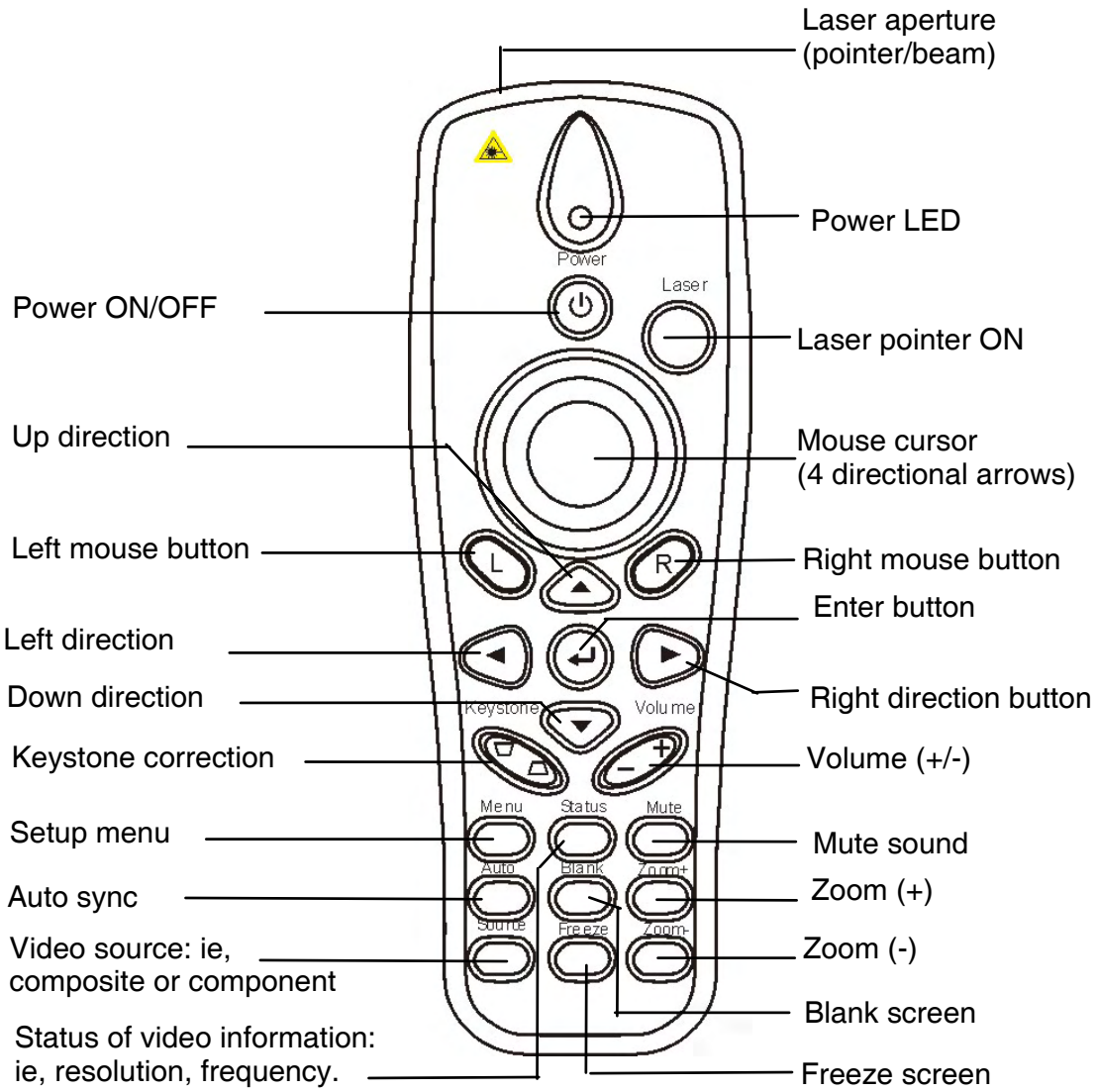

WARNING:
To reduce the risk of injury to the eyes, do not look directly into the laser light emitted from the aperture on the Remote Control and do not point the laser light into anyone's eyes. This remote control is equipped with a Class IIIA laser that emits radiation.

NOTE:
Do not leave the remote control close to the cooling fan outlet of the projector.

For the information of remote control transmission range, please refer page 28.

ENGLISH

The following buttons are located on the projector Control Pad or on the Remote Control

Power Button	Switch power on or off. Use the Power button to begin the warm-up period. The power light blinks green during warm-up and stays green when the projector is ready to use.
Menu Button	Use to display the On-Screen-Display Menus, which provide several options for adjusting the projected image.
Auto Button	Use to auto adjust the image quality.
Source Button	Use to select input source.
Status Button	Use to get projector's operation status information
L Button	Use as the left mouse button.
R Button	Use as the right mouse button.
↵ Button	Press to enter function.
4 Directional Selection Buttons	Use to select or adjust the control items
Laser Pointer Button	Use instead of a pointer to activate the laser pointer for use in presentations.
Volume +/– Button	Use to adjust the volume of the audio output.
Keystone Button	Use to adjust the image vertically and make it square.
Blank Button	Use to blank the image and mute audio.
Freeze Button	Use to freeze or unfreeze the image
Mute Button	Use to turn on or off the speaker.
Zoom Button	Use the Zoom (+/-) buttons to zoom the image in and out. Use the 4 directional selection buttons to pan the image.
Input Source Selection	To select the correct device you are connecting with.

Installation Steps

Getting Started

1. Place the projector on a flat surface.
2. Position the projector at the desired distance from the screen.
3. The projection distance is less than 33 feet (10M).

CAUTION:

- Proper ventilation is import. Don't block ventilation openings. Never operate this projector in an enclosed area. Do not place the projector on a tablecloth or other soft covering that may block the vents. With ceiling installations, use approved mounting hardware. Do not put the projector near heater, air ducts, transformers or other electrical devices. For permanent installations follow local codes.
- Don't set liquids on the projector. Spilled liquids may damage your projector.
- Don't put the projector on a hot surface or in direct sunlight.
- Do not drop the projector.

ENGLISH

Connecting the Projector

1. Connect the power cable
2. When you connect the power cable to the projector, the Power LED & Lamp Ready LED on the control pad will illuminate, wait until LED stop flashing before turning on the projector.

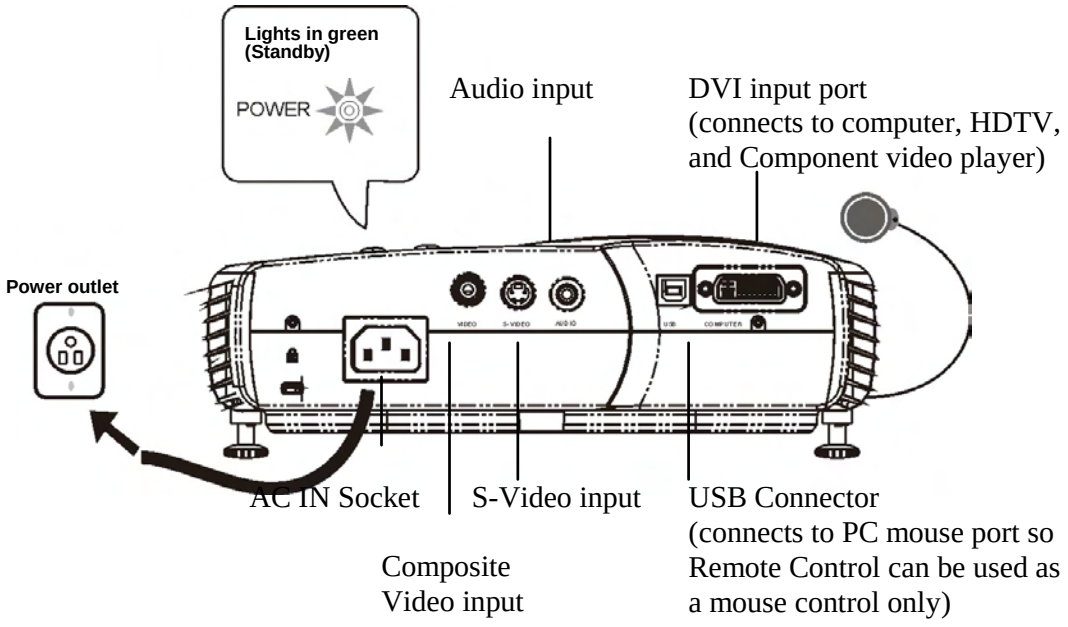

Connecting Input and Output Devices

The cables are color coded to assist you in making the connections.

You can connect more than one image source at a time. The input source will be detected automatically when enable the "Auto Source" function is enabled in the Status Menu of the OSD MENU. Manually pressing the "Source" button key operates selection.

The illustration below shows the ports and appropriate cables for connecting external devices to the projector.

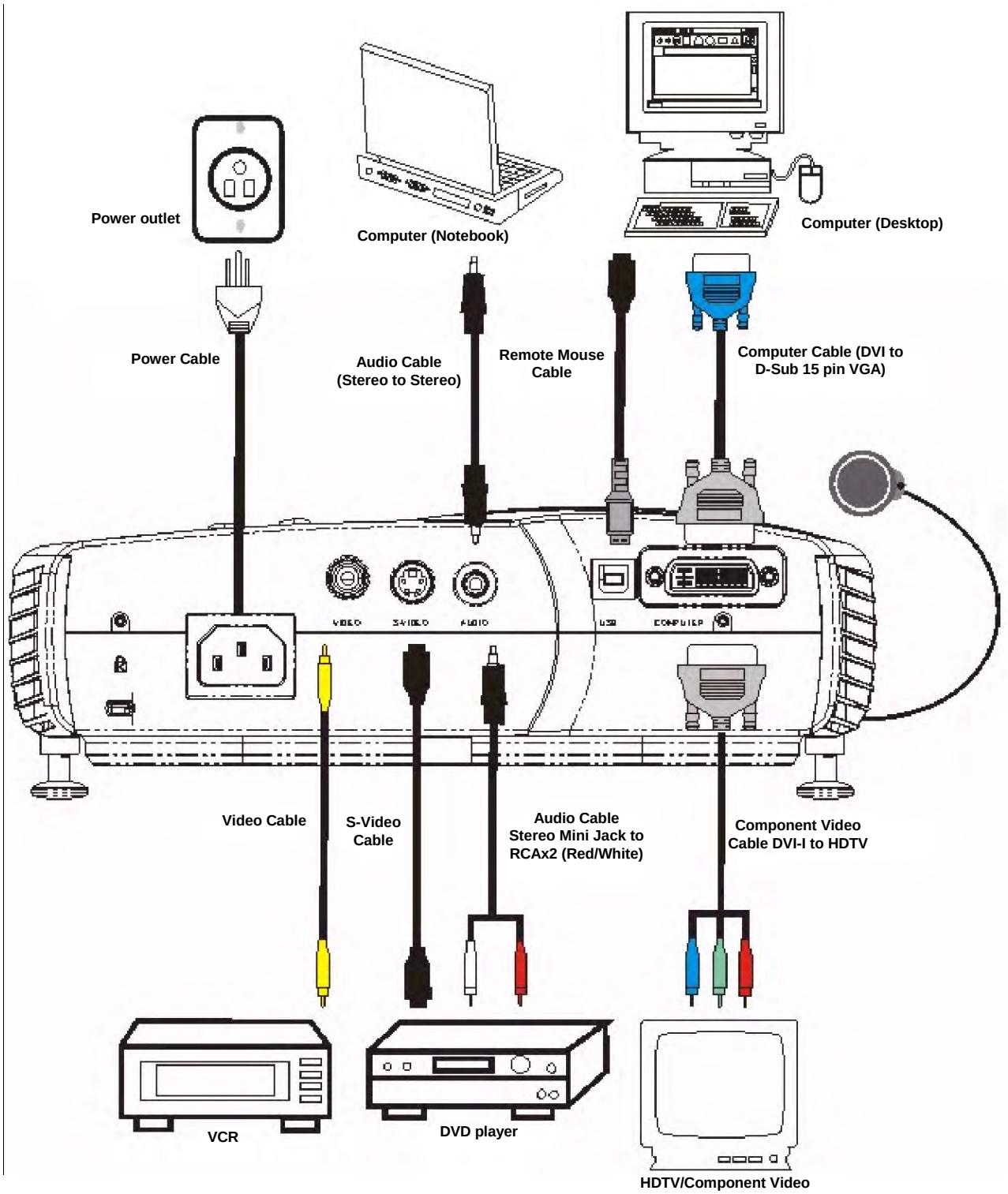

Starting the Presentation

Power on

1. Remove the lens cap
2. Make sure Lamp LED steady orange state.
3. Press Power on the remote control, or Power on the control pad, to turn on the unit.

NOTE:

- When powered on, both the fans & lamp will be turned on. The power indicator will begin to flash until a video source is found, and the lamp indicator will extinguish when lamp is in normal status.
- The projection image will be in full brightness within 10-15 seconds and the "Digital Zoom Projector" screen menu will appear.

CAUTION:

Don't look directly into the lens when the lamp is on. Doing so may cause an eye injury.

ENGLISH

Turn on the source

1. Turn on the source
2. Selecting the source (PC or Video)
   - The "Auto Source" function will automatically find a source.
   - The Source button on the control panel or remote control can be used to select a source.

NOTE:

- Always turn off the image source (computer or video) and projector before connecting or disconnecting cables.
- When using a computer as the input device, set the resolution of your computer's graphic card to 1024x768 for the optimal projected image. Refer to the Timing Charts page 30 to verify that the video signal timing of your graphics card is supported by the projector.
- Many laptop computers do not automatically turn on their external video port when another display device is connected. Refer to your computer's user guide for the function key or command that activates the port. MAC users may need to turn on SimulSCAN or monitor mirroring. Refer to the computer manual.
- If a source is not found in 10 minute, the power will be automatically be turn off.

Adjustment

Adjusting Projector Angle

Place the projector on a flat surface to position it in centre horizontally for best viewing.

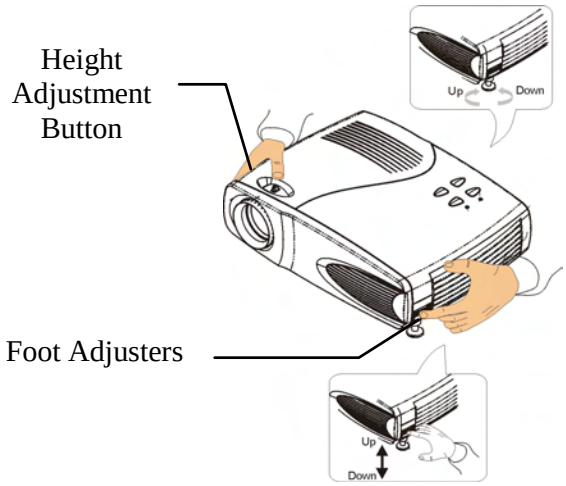

Adjust the projector angle using the Height Adjustment Buttons.

Press the Height Adjustment buttons while tilting the projector. The Foot Adjuster will extend accordingly, angled 7 degrees upwards.

NOTE:

Press the Height Adjustment button before adjusting the Foot Adjusters to avoid resulting in damage.

Adjusting the Zoom and Focus

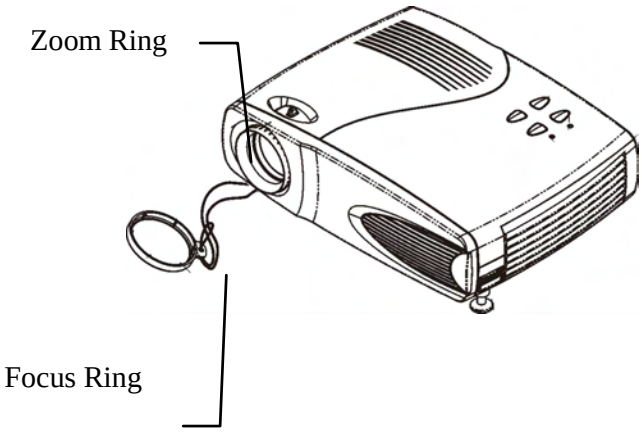

Rotate the zoom ring and focus ring until the projected image is clear and at the desired size. The projector can focus within the range of 5 feet (1.5m) to 33 feet (10m).

NOTE:

If vertical bars appear on the display after adjusting the focus, press the "Auto" button on the Control Pad. Or use the frequency/tracking features in the OSD menu to manually adjust the synchronization and tracking of the image.

Adjusting the Keystone Control

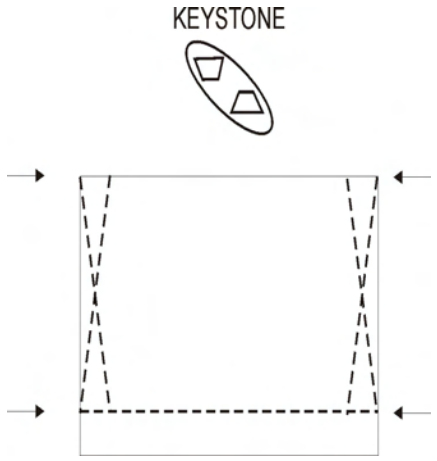

To adjust image vertically and make a square image. Adjust the keystone function by pressing the keystone button on the remote control or through OSD menus.

ENGLISH

Adjusting the Zoom and Pan

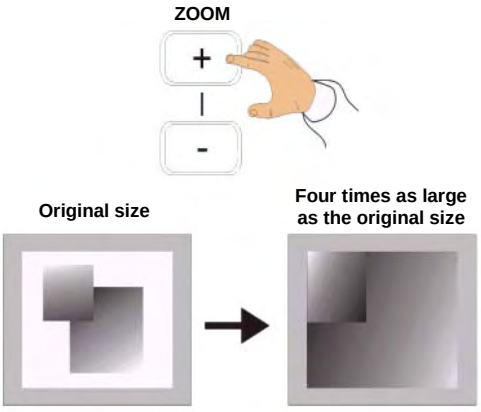

Press the zoom +/- buttons on remote control to enter zoom mode, and use directional keys to pan upward, downward, right, and left.

☐ **Make any necessary image adjustments by using the on-screen menus.**
(Refer page OSD Menu section for the details)

Power Off

1. **Turn off the projector and image sources in the order listed here.**
   a. Computer
   b. Projector
   c. Audio Source (if different from your video source or computer).
   d. Video source (such as VCR, DVD, HDTV).

2. **Press the Power button on the top of the unit or remote control to turn off the power.**
   A confirmation request will appear on the screen asking for reconfirmation of power off request.

3. **Press the Power button again to confirm.**
   The lamp will turn off immediately but the fan will continue running for 1 minute to cool down the unit. The Power Indicator will continue flashing as long as the live power cord is connected to the projector.

Restart

To restart the unit shortly after powering off, the user must wait for 1 minute for the lamp to cool down. The lamp ready LED will stop flashing when the projector is ready to power up.

CAUTION:

The unit may remain HOT for up to 45 minutes upon power off. User should be careful before handling the unit to prevent any burn or injury.

WARNING:

To reduce the risk of electric shock or damage to the equipment:

- Do not disable the power cord-grounding plug. The grounding plug is an important safety feature.
- Plug the power cord into a grounded (earthed) electrical outlet that is easily accessible at all times.
- Disconnect power from the projector by unplugging the power cord from the electrical outlet.
- Do not place anything on top of power cords or cables. Arrange them so that no one may accidentally step on or trip over them.
- Do not pull on a cord or cable. When unplugging from the electrical outlet, grasp the cord by the plug.

On-Screen-Display Menu Format and Description

The OSD menu will appear if any button is pressed thru using the control pad and remote control.

Input Source OSD

Display Logo

The projection image will appear in full brightness within 10-15 seconds and the "Digital Zoom Projector" logo will appear on the screen.

No Input Signal

"No Input Signal" will show on the screen when there is no active signal detected within 16 seconds.

Standby

When input signal is not detected for 16 seconds, the splash screen will appear until a signal is detected.

Power off

The splash screen will be displayed for 6 seconds requesting power off confirmation.

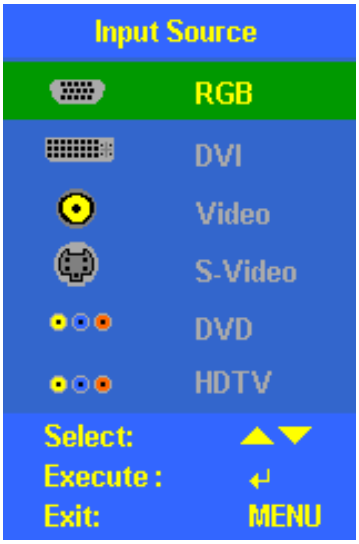

Source button on Remote control

Source button on control pad

Input Source

The splash screen will be displayed upon pressing the "Source" button on the top cover or remote control.

Press "▼▲" or "Source" to select the desired input source.

ENGLISH

Ezkey OSD

By repeatedly pressing EZKEY the following menu can be scrolled though. The user may adjust it to the desired level through keypads of Auto (-) and Source (+).

Keystone Correction

Use the (-) and (+) to adjust the vertical keystone level of the image.

Frequency

Use the (-) and (+) to adjust the frequency.

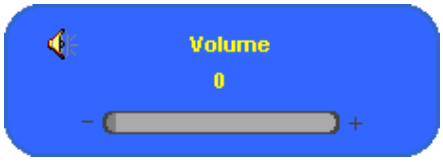

Volume

Use the (-) and (+) to adjust the volume level.

Brightness

Use the (-) and (+) to adjust the display brightness.

Remote Control Buttons OSD

Following menus/functions can be accessed through corresponding buttons on the remote control.

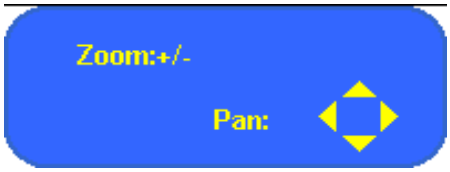

Zoom & Pan

Use Zoom (+/-) keys to zoom the image in and out. Use the 4 directional selection buttons to pan the image.

Mute

Use the mute key to turn on or off the speaker.

Blank & Mute

Use blank key to blank the image and mute the Audio.

Freeze

Use the freeze key to freeze or unfreeze the Image.

OSD Menu

Use the On-Screen-Display Menus shown below to adjust the projected image. To access and adjust the On-Screen-Menu do the following:

1. Press the Menu button on the remote control to select one of six on-screen menus: Main Menu, Setup Menu, Color Manager Menu, Language Menu, Utility Menu, and Status Menu.
2. Press arrow keys Left / Right (◀/▶) for main menu selection, and use arrow keys upward / downward (▲/▼) for sub-menu or for adjustment selection.
3. Press the "menu" button to exit an OSD menu.

Main Menu

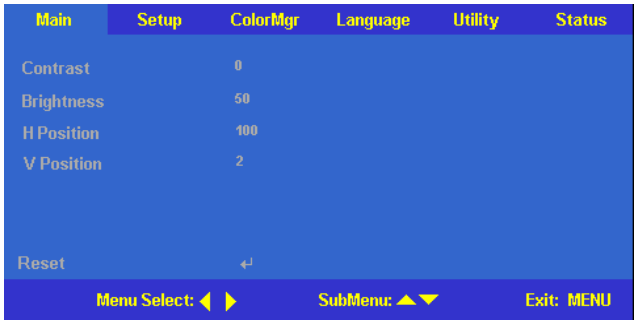

PC Mode

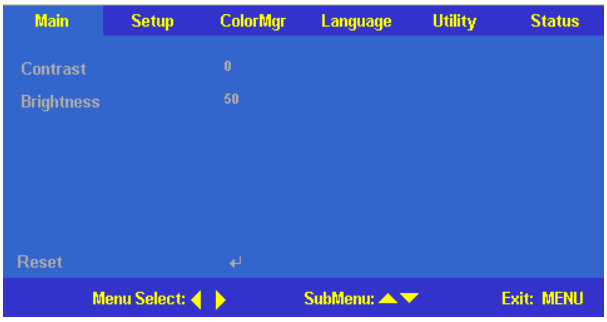

Video Mode

Contrast

Use arrow keys Left / Right (◀/▶) to adjust the contrast.
Adjustment range: from min-max (0 – 100) by 50 steps.
(Default value: factory calibrated)

Brightness

Use arrow keys Left / Right (◀/▶) to adjust the brightness.
Adjustment range: from dark – light (0-100) by 50 steps.
(Default value: factory calibrated)

Horizontal Position

Use arrow keys Left / Right (◀/▶) to adjust the position in horizontal direction.
Adjustment range: from left – right (0-100).
(Default value: centre position)

Vertical Position

Use arrow keys Left / Right (◀/▶) to adjust the position in vertical direction.
Adjustment range: from bottom – top (0-100).
(Default value: centre position)

Reset

Use ↵ button to reset to default value.
In PC mode to reset contrast, brightness to default value.
In Video mode to reset contrast, brightness to default value.

ENGLISH

Setup Menu

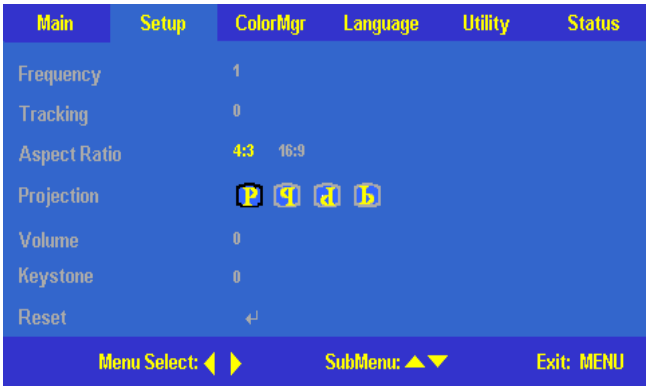

PC Mode

Video Mode

Frequency
Use arrow keys Left / Right (◀/▶) to adjust the sampling clock to eliminate flicker.
Adjustment range: from low-high (0-100) by 31 steps.
(Default value: auto detected)

Tracking
Use arrow keys Left / Right (◀/▶) to adjust the sampling number.
Adjustment range: from low - high (0 – 100) by 100 steps.
(Default value: auto detected)

Video AGC
Use arrow keys Left / Right (◀/▶) to adjust the video automatic gain control. Selection item: on / off.
(Default value: on)

Video Type
Use arrow keys Left / Right (◀/▶) to adjust the video source type.
Selection item: RGB / Y-Pb-Pr (HD) / Y-Cb-Cr (DVD)
(Default value: DVD)

Aspect Ratio
Use arrow keys Left / Right (◀/▶) to select the video aspect ratio.
Selection item: 4:3 & 16:9. (Default value: 4:3)

Projection Type
Use arrow keys Left / Right (◀/▶) to select different projection type.
Selection item: Desktop Front/Rear, Ceiling Front/Rear.
(Default value: desktop front)

Volume
Use arrow keys Left / Right (◀/▶) to adjust the volume level.
Adjustment range: from low - high (0-8) by 8 steps.
(Default value: 4)

Keystone
Use arrow keys Left / Right (◀/▶) to adjust the keystone level of display.
Adjustment range: from ⏢ to ⏢ (0-100) by 32 steps.
(Default value: 50)

Reset
Use ↵ button to reset to default value.
In PC mode to reset aspect ratio, projection type, volume, keystone to default value.
In Video mode to reset video AGC, video type, aspect ration, projection type, volume, keystone to default value.

Color Manager Menu

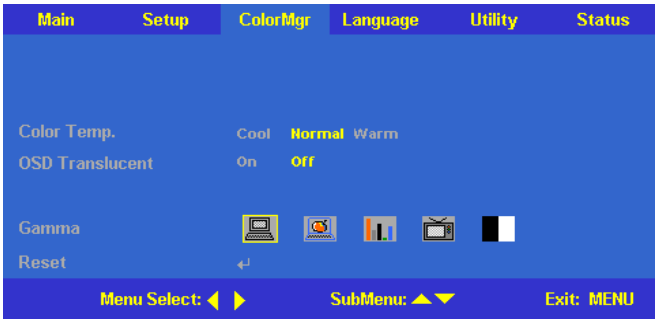

PC Mode

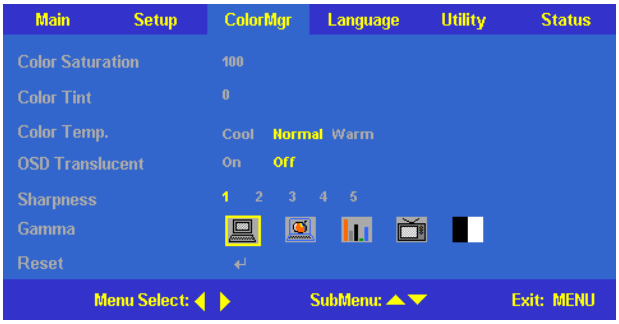

Video Mode

Color Temp.

Use arrow keys Left / Right (◀/▶) to select different color temperature
Adjustment range: from cool, normal, warm by 4 steps.
(Default value: normal)

Color Saturation

Use arrow keys Left / Right (◀/▶) to adjust video saturation.
Adjustment range: from color off to color level (0 – 100) by 50 steps.
(Default value:50)

Color Tint

Use arrow keys Left / Right (◀/▶) to adjust the video tint/hue.
Adjustment range: from red to green (0-100) by 50 steps.
(Default value: 50)

OSD Translucent

Use arrow keys Left / Right (◀/▶) to select OSD background translucent or not.
Adjustment range: translucent (on/off) by 2 steps.
(Default value: off)

Sharpness

Use arrow keys Left / Right (◀/▶) to select different sharpness level.
Adjustment range: from soft to clear (1-5) by 5 steps.
(Default value: 3)

Gamma

Use arrow keys Left / Right (◀/▶) to select different gamma correction.
Selection items: from PC, MAC, Graphic, Video and Black & White by 5 steps.
(Default value: PC)

Reset

Use ↵ button to reset to default value.
In PC mode to reset color temp, OSD background, translucent, sharpness, gamma to default value.
In Video mode to reset color temp, gamma to default value.

ENGLISH

Language Menu

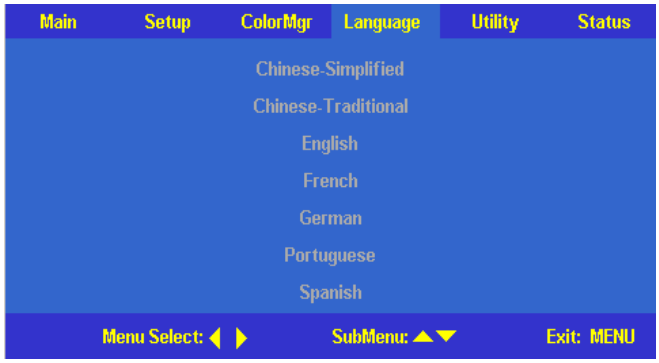

Use arrow key of Upward / Downward (▲/▼) to select the desired language: Chinese-Simplified, Chinese-Traditional, English, French, German, Portuguese, Spanish; and use the ↵ button to enter the selected language.
(Default value: English)

Utilities Menu

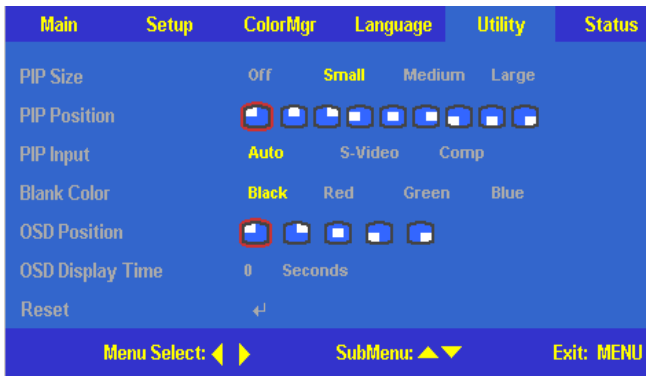

PC Mode

Video Mode

PIP Size Use arrow keys Left / Right (◀/▶) to select different picture in picture size. Selection items: off/small/medium/large by 4 steps. (Default value: off)

PIP Position Use arrow keys Left / Right (◀/▶) to select different picture in picture position. Adjustment range: from upper left to bottom right by 9 steps. (Default value: bottom right)

PIP Input Use arrow keys Left / Right (◀/▶) to select different picture in picture source. Selection items: Auto/S-video/Comp by 3 steps. (Default value: auto)

Blank Color Use arrow keys Left / Right (◀/▶)to select different blanking color Selection items: Black / Red / Green / Blue by 4 steps. (Default value: black)

OSD Position Use arrow keys Left / Right (◀/▶) to select different OSD location Selection items: from upper left to bottom right by 5 steps. (Default value: centre)

OSD Display Time Use arrow keys Left / Right (◀/▶)to select auto timeout Selection range: from 10 to 30 seconds by 21 steps. (Default value: 15 seconds)

Reset To use ↵ button to reset to default value.

Status Menu

Auto Source To turn on or off the automatic function to detect one or more active input source.

Auto Power Off To turn on or off the function for automatically lamp off when there is no active signal.

Video Information To show resolution, H/V sync. information at RGB mode, color standard at Video mode.

Software Revision Software version information.

Lamp Hour Lamp hour used information.

Lamp Hour Reset To reset lamp hour after changing the lamp. See page 35 for lamp changing process.

ENGLISH

Reference

Positioning the Projector

To adjust the size of the projected image, refer to figures 1 below and table 1 on the next page for Projection Distances to increase/decrease the distance between the projector and the projection screen.

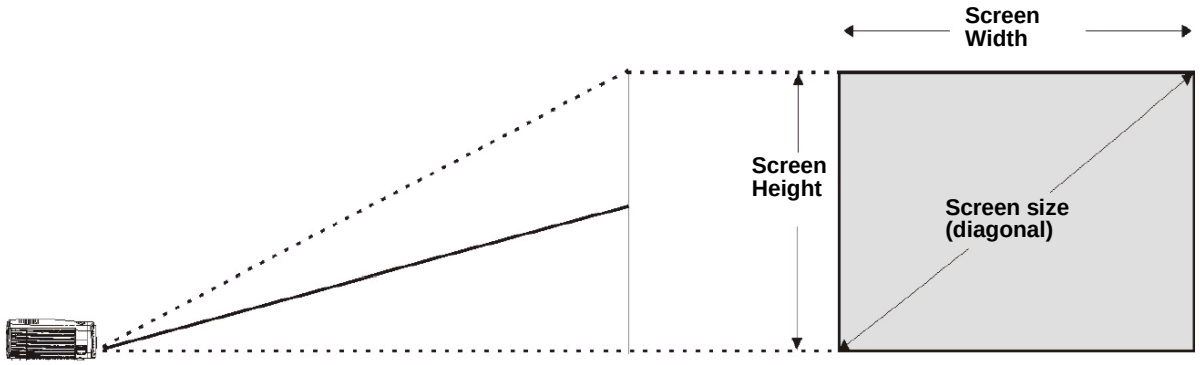

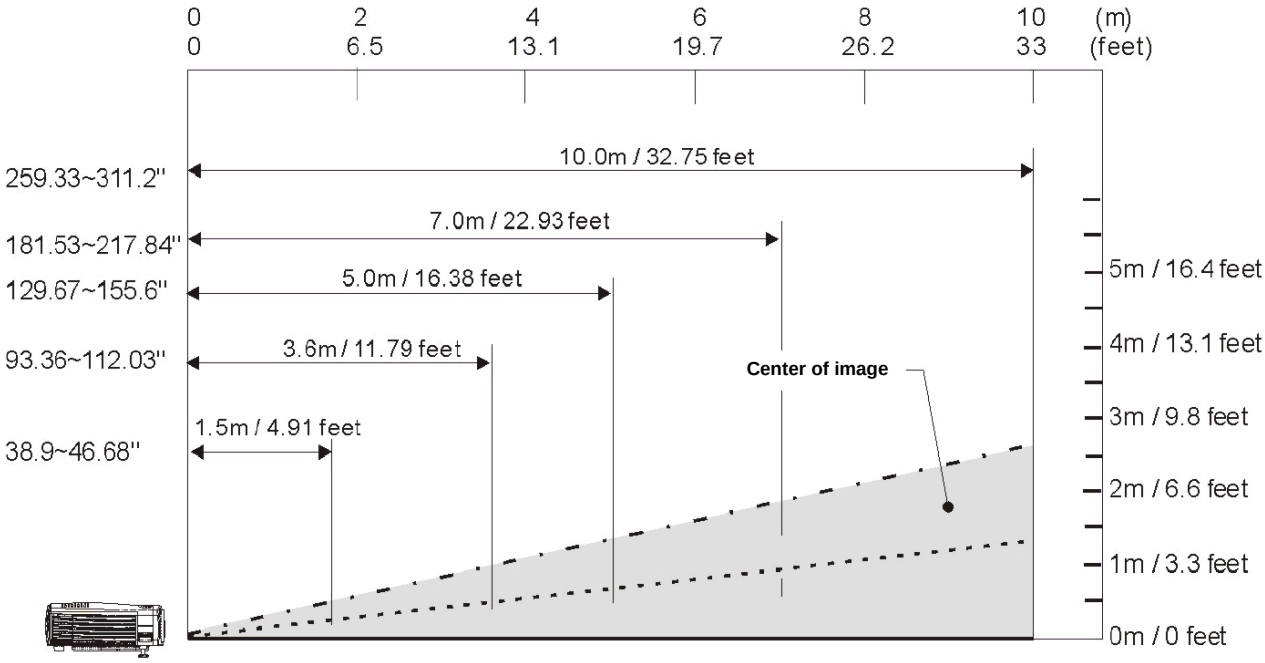

Figure 1: Projection Distance vs. Image Size

Distance	Width x Height	Diagonal
5 feet	31.12x23.34" - 37.34x28.01"	38.90 - 46.68"
(1.5m)	(0.78x0.59 - 0.94x0.70m)	(0.98 -1.17 m)
6.5 feet	41.49x31.12" - 49.79x37.34"	51.87 - 62.24"
(2m)	(1.04x0.78 - 1.25x0.94m)	(1.31 - 1.57m)
8 feet	49.79x37.34" - 59.75x44.81"	62.24" - 74.69"
(2.4m)	(1.25x0.94 - 1.50x1.13m)	(1.57 - 1.88m)
9 feet	58.09x43.57" - 69.71x52.28"	72.61" - 87.14"
(2.8m)	(1.46x1.10-1.75x1.32m)	(1.83 - 2.19m)
9.8 feet	62.24x46.68" - 74.69x56.02"	77.80" - 93.36"
(3m)	(1.57x1.17 - 1.88x1.41m)	(1.96 - 2.35m)
10.5 feet	66.39x49.79" - 79.67x59.75"	82.99" - 99.58"
(3.2m)	(1.67x1.25 - 2.01x1.50m)	(2.09 - 2.51m)
12 feet	74.69x56.02" - 89.63x67.22"	93.36" - 112.03"
(3.6m)	(1.88x1.41- 2.26x1.69m)	(2.35 - 2.82m)
13 feet	82.99x62.24" - 99.58x74.69"	103.73" - 124.48"
(4m)	(2.09x1.57 - 2.51x1.88m)	(2.61- 3.13m)
14.5 feet	91.29x68.46" - 109.54x82.16"	114.11" - 136.93"
(4.4m)	(2.30x1.72 - 2.76x2.07m)	(2.87 - 3.45m)
16 feet	99.58x74.69" - 119.50x89.63"	124.48" - 149.38"
(4.8m)	(2.51x1.88 - 3.01x2.26m)	(3.13 - 3.76m)
16.4 feet	103.73x77.80" - 124.48x93.36"	129.67" - 155.60"
(5m)	(2.61x1.96 - 3.13x2.35m)	(3.26 - 3.92m)
17 feet	107.88x80.91" - 129.46x97.09"	134.85" - 161.82"
(5.2m)	(2.72x2.04 - 3.26x2.44m)	(3.39 - 4.07m)
18 feet	116.18x87.14" - 139.42x104.56"	145.23" - 174.27"
(5.6m)	(2.92x2.19 - 3.51-2.63m)	(3.66 - 4.39m)
20 feet	124.48x93.36" - 149.38x112.03"	155.60" - 186.72"
(6m)	(3.13x2.35 - 3.76x2.82m)	(3.92 - 4.70m)
23 feet	145.23x108.92" - 174.27x130.70"	181.53" - 217.84"
(7m)	(3.66x2.74 - 4.39x3.29m)	(4.57 - 5.48m)
26.2 feet	165.97x124.48" - 199.17x149.38"	207.47" - 248.96"
(8m)	(4.18x3.13 - 5.01x3.76m)	(5.22 - 6.27m)
33 feet	207.47x155.60" - 248.96x186.72"	259.33" - 311.20"
(10m)	(5.22x3.92 - 6.27x4.70m)	(6.53 - 7.83m)

Table 1: Projection Distances vs. Image Size

ENGLISH

Remote Control Transmission Range

The Remote Control shall function at a distance within the range that the IR Transceiver can receive. For best operation, kindly refer to the following illustration of the Remote Control and IR transceiver transmission range and distance.

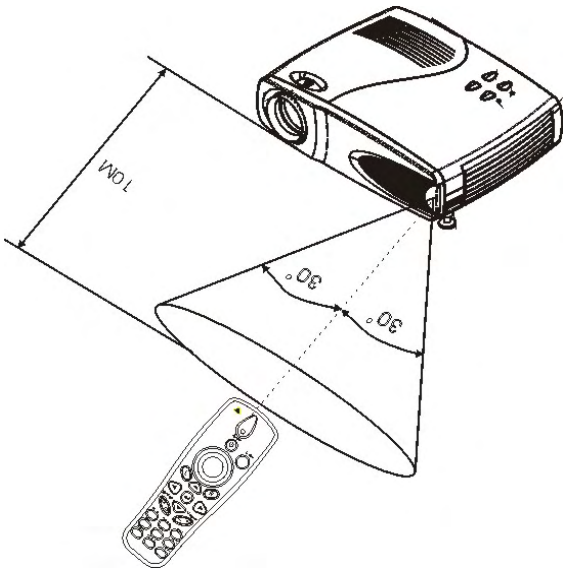

The projector is equipped with an IR Transceiver located at the front cover of the unit for the receipt of remote control transmission.

The IR Transceiver can receive transmission signal with the effective range, of 60° from an outstretched arm pointed towards the IR Transceiver.

The effective transmission distance of remote control is about 10 meters, including the reflection distance, response from the screen to the remote control.

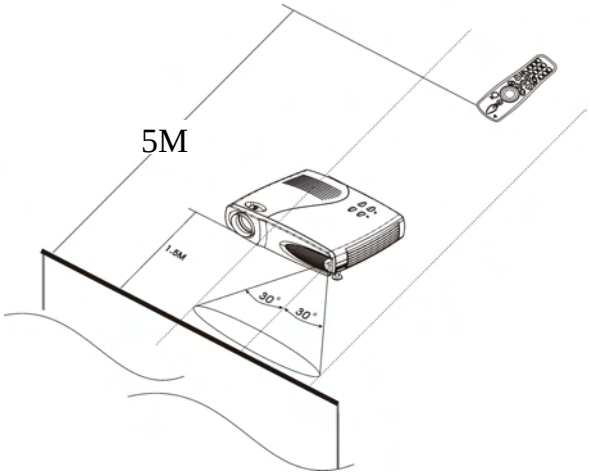

Users, using the remote control can, either point it directly at the IR Transceiver, or stand behind the unit and point it at the projected image.

Product Specification

Display Type	DLP™ Projection System
Panel	0.7" DMD x 1
Native Resolution	XGA (1024 X 768) Native
Data Compatibility	VGA, SVGA, XGA, SXGA, Macintosh
Maximum Brightness	1500 ANSI Lumens
Contrast Ratio	1000:1
Zoom Ratio	1: 1.20 Manual Zoom / Focus
Color Reproduction	16.7 Million
Aspect Ratio	4:3 / 16:9 screen selectable
Digital Keystone Correction	(V) +/- 15 degree
Horizontal Frequency	15, 31 - 90 KHz
Vertical Scan Rate	43 - 85 Hz
Projection / Installation Mode	Front / Rear / Desktop / Ceiling
Lamp Type	150W VIP
Lamp Life	1500 hours
Projection Distance	1.5 to 10 meters
Projection Image Size (diagonal)	40" to 311"
Audio Noise	35 dB
Input Terminals	DVI-I, Video, S-Video, Audio
Output Terminals	USB for mouse control
Speakers	0.5W x 1
Video Compatible	NTSC, NTSC 4.43, PAL, SECAM
Dimensions (WxDxH)	188mm x 240mm x 64mm (7.4" x 9.5" x 2.5")
Weight	3.5 lbs
Power Supply	100 - 240vac, 47-63 Hz
Power Consumption	220 Watts
On-Screen Display Language	English, French, Spanish, German, Portuguese, Traditional Chinese, Simplified Chinese
Safety & Regulatory	UL, Cul, CE, TUV, FCC Class B, CCC
Operation Temperature Range	10-35 ° C
Storage Temperature Range	-20 ~ 60° C
Operating Relative Humidity	5% ~ 90% Non-Condensing
Storage Relative Humidity	5% ~ 95% Non-Condensing
Altitude (operating)	0 ~ 10,000 ft 0 ~ 3,048 m
Altitude (storage)	0 ~ 40,000 ft 0 ~ 12,192 m

ENGLISH

Timing Charts

The projector can display several resolutions. The following table outlines the resolutions that can be displayed by the projector.

Table 2: ANALOG Computer Timings (Resolution and Refresh Rate【fV】)

Resolution	FH(kHz)	FV (Hz)	Signal mode
640 x 350	37.9	85	Expanded VGA
640 x 480	31.5	60	Expanded VGA
640 x 480	37.9	72	Expanded VGA
640 x 480	37.5	75	Expanded VGA
640 x 480	43.3	85	Expanded VGA
720 x 400	31.5	70	Expanded VGA
720 x 400	37.9	85	Expanded VGA
800 x 600	37.9	60	Expanded SVGA
800 x 600	48.1	72	Expanded SVGA
800 x 600	46.9	75	Expanded SVGA
800 x 600	53.7	85	Expanded SVGA
1024 x 768	35.5	43.4	Native XGA
1024 x 768	56.5	70	Native XGA
1024 x 768	68.7	85	Native XGA
1280 x 1024	64.0	60	Compressed SXGA
1280 x 1024	79.98	75	Compressed SXGA
640 x 480	35.0	66.68	Expanded Mac II 13"
832 x 624	49.73	74.55	Expanded Mac 16"
1280 x 1024	64.0	60	Compressed FM Town

Table 3: DIGITAL Computer Timings (Resolution and Refresh Rate 【fV】

Resolution	FH(kHz)	FV (Hz)	Signal mode
640 x 350	37.9	85	Expanded VGA
640 x 480	31.5	60	Expanded VGA
640 x 480	37.9	72	Expanded VGA
640 x 480	37.5	75	Expanded VGA
640 x 480	43.3	85	Expanded VGA
720 x 400	31.5	70	Expanded VGA
720 x 400	37.9	85	Expanded VGA
800 x 600	37.9	60	Expanded SVGA
800 x 600	48.1	72	Expanded SVGA
800 x 600	46.9	75	Expanded SVGA
800 x 600	53.7	85	Expanded SVGA
1024 x 768	35.5	43.4	Native XGA
1024 x 768	56.5	70	Native XGA
1024 x 768	68.7	85	Native XGA
1280 x 1024	64.0	60	Compressed SXGA
640 x 480	35.0	66.68	Expanded Mac II 13"
832 x 624	49.73	74.55	Expanded Mac 16"
1280 x 1024	64.0	60	Compressed FM Town

Troubleshooting

Power Indicator

The power and lamp indicator on the control pad provides you with information about the condition of the projector.

Indicator	Light Status	Condition
Lamp Ready LED	Blinking	• Lamp is off but power cord is connected to the projector. • Projector is in standby mode. • Lamp is off and fan is running. • Projector is cooling down.
Power LED	Two blinks	Scaling chip has malfunctioned.
	Three blinks	System has overheated.
	Four blinks	I2C bus has failed.
	Five blinks	Lamp has malfunctioned.
	Six blinks	Fan is in malfunction.
	Seven blinks	Lamp cover is open.
	Eight blinks	DMD board failure. Call for service.

NOTE

Every will last for 1/2 second and the interval for every blink is lasted 1 second.

Remote Control

Symptom	Cause and Solution
Projector responds poorly or not at all to the remote control.	• Make sure that the total distance from the remote to the projector is no more than 33 feet (10m). • Point the remote control at the screen or at the front of the projector. • Make sure nothing is blocking the infrared sensor on the front of the projector. • Darken the room. The light might be effecting the remote Control. • Replace the remote control batteries.

Sound

Symptom	Cause and Solution
No sound	• Adjust volume • Verify audio/input connections • Adjust audio source
Poor sound quality	• Make sure you are connected to the earphone jack on your laptop or line out jack on your desktop. • Make sure the volume setting on your computers is to the halfway point.
No audio-out port on the image source	You will be not able to connect audio to the projector.

ENGLISH

Image Source

Symptom	Cause and Solution
The S-Video image source does not appear.	• Be sure to use the cable that comes with your projector. Some inexpensive cables are not compatible with the projector. • Verify that the cables are connected correctly. • Verify that the proper image source is connected and the proper functions are enable of the menu. • Make sure that the image source is turned on. • Turn off everything and power up again following the proper process. • Make sure that your laptop's external video port is turned on.
Only the start-up screen appears and not the image from the image source.	
The image source is connected but a "No Signal Message" appears.	

Image Quality

Symptom	Solution
Color or text is not being projected.	• Adjust the brightness up or down until the text is visible.
Some text or fonts are not as sharp on the projector as they are on the computer.	• For optimal results, set the computer's resolution to 1024x768. (Refer to your computer user manual.) This projector is capable of projecting up to 1280 x 1024.
Image isn't centred on the screen.	• Be sure that the projector is at a 90° angle to the screen. • Reposition the image.
Image is out of focus.	• Make sure that the projection screen is at least 5 ft (1.5m) from the projector. • Turn the projection lens till the image is focused. • Check the projection lens to see if it needs cleaning.
Image and menus are upside down.	Check main menu of Setup to make sure projection type is correct in accordance with the projection status. • If projecting from a ceiling mount, make sure that the ceiling projection function is selected. • If projecting from an upright position, make sure that Front or Rear projection is selected.
Image and menus are reversed from left to right.	Check main menu of Setup to make sure projection type is correct in accordance with the projection status. • If projecting from behind a screen make sure that Rear projection is selected. • If projection in front of a screen, make sure that Front or Ceiling Projection is selected.
Image appears flat with no contrast.	To adjust the contrast: 1. Press Menu key on the remote and go into "Main" menu. 2. Select "contrast" and use the cursor keys +/- to increase or decrease the contrast to the desired level.
Image appears washed out or dark	• Check projection lens to see if it needs cleaning. • To adjust the brightness 1. Press Menu on the remote and go into "Main" menu 2. Select "Brightness" and use arrow keys +/- to increase or

	decrease the brightness to the desired level.
Image is blocked	Press Menu on the remote and go into the main menu of Utility • To disable PIP Size function • To check PIP Input selection
PIP window can not display video	
Image is "noisy" or streaked.	• To adjust the frequency 1. Press Menu to go into main menu of "Setup". 2. Adjust "Frequency" and "Tracking" to an optimal setting. • Try connecting with another computer. The problem might be due to the video card of the connected computer itself.
Image is wider at the top or bottom of the screen.	This keystone effect is caused by the projection angle not being perpendicular to the screen. To achieve a square image, raise or lower the front legs or prop up the back of the projector, or adjust keystone function thru remote, EZ Key on top cover of main set.
Image is wider at one side than the other.	Make sure the projector is set at a 90 degree angle to the screen.
Projected colors don't match the computer or video source colors.	Press menu to go into main menu of "Color Manager" and adjust color temperature & gamma to optimize the colors. The Image Manager settings work best if you reset the Main Menu prior to setting Color Manager.
Adjust Function can not find from Ezkey on main set or remote	Press menu key on the remote to go into several function keys selection.

ENGLISH

Lamp

Symptom	Cause and Solution
No light is coming from the lamp.	• Make sure that the power cable is properly connected to a fully functional AC electric outlet. • Make sure that the power cord is properly connected to the projector. • Make sure that you have removed the lens cap on the projector lens at the front of the projector. • Make sure you have pressed the power button and the power LED light is a steady green. • Check the projector's lamp to make sure that it is securely connected in the lamp module. • Make sure that the lamp module door is fully closed. • Make sure that the cable connectors do not have any bent pins. • Replace the lamp
Lamp shuts off	• A minor power surge may cause the lamp to shut off. Press the power button twice to turn off the projector. (The power light continues to blink and the fan continues to run until the projector cools down.) Wait at least one minute, then press the power button again. • Replace the lamp module.

Maintenance

Changing the Lamp

Important! The lamp contains a trace amount of mercury. Some governments require special disposal of lamps containing mercury. Dispose of lamps in accordance with the law and any applicable local regulations.

The lamp module should be replaced with a certified replacement part. To order a new lamp, contact your local dealer. After changing the lamp module you should reset the lamp hours in accordance with the lamp hour reset instructed hereafter.

WARNING:

When replacing the lamp be sure to turn off power and unplug the power cord. To avoid any burn, wait 45 minutes before opening the lamp module cover and do not touch any hot surface inside.
Do not loosen or remove any screws other than lamp module or its cover.
Doing so many cause electric shock.

To replace the lamp module

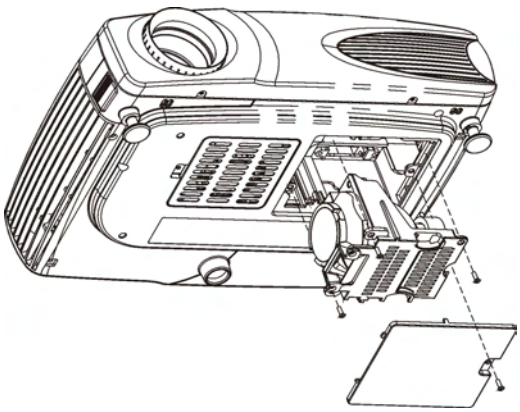

1. Turn off the projector and let the unit cool down for at least 45 minutes.
2. Unplug the power cord from projector.
3. Turn the projector upside down. Loosen the screw with a phillips screwdriver. Remove the lamp cover by lifting it up and out..
4. Loosen the three screws on the lamp module bracket.
5. Gently lift and pull up on the two slotted indentation on the located on the lamp housing to remove the lamp module.
6. Carefully place the new lamp module into the projector with the glass portion facing left. Insert the lamp module securely and match two location ribs to the location holes on the inner engine case. Tighten the three screws.
7. Reinstall the lamp module cover and tighten the screw.
8. Turn on the projector.
9. Reset the lamp hours.

NOTE:

1. The lamp contains a trace amount of mercury. Some governments required special disposal of lamps containing mercury. Dispose of lamps in accordance with the law and any applicable local regulations.
2. Do not loosen or remove any screw other than lamp unit or its cover.
3. Do not touch any of the glass surface on the lamp unit.

Lamp Hour Reset

Press the cursor keys through following sequence to reset Lamp hour:
down ▼ → up ▲ → left ◀ → right ▶

Press "Exit: Menu" to cancel

ENGLISH

Changing the Battery of Remote Control

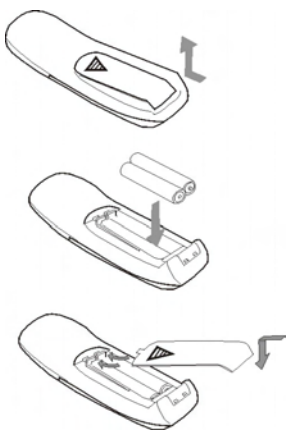

- Remove the battery cover.
  Push the knob while lifting up the cover of the battery compartment.
- Insert the batteries.
  Install AAA battery x2 (included) into the remote. Make sure they are in the correct direction (+) and minus (-) placed.
- Replace the cover to the battery compartment.

Cleaning

Cleaning the Projection Lens

1. Be sure the projector is powered-off and has cooled down.
2. Unplug the projector.
3. Remove the lens cap.
4. Apply a non-abrasive camera lens cleaner to a soft, dry cloth.
5. Lightly wipe the cleaning cloth over the lens.

NOTE: Always keep lens cap on the projector when not in use.

CAUTION:

- Avoid using an excessive amount of camera lens cleaner. Do not use abrasive cleaners, solvents or other harsh chemicals as they might scratch the lens.
- Do not spill any camera lens cleaner on the exterior case as it may fade, deform or melt the exterior case.

Cleaning Exterior Case

1. Be sure the projector is powered-off and has cooled down.
2. Unplug the projector.
3. Wipe off the dirt or dust on the case with a soft, dry, lint-free cloth.
4. Moisten a soft cloth with water or a non-abrasive is recommended to clean off stubborn dirt or stains.

CAUTION:

Do not use alcohol, benzene, thinner or other chemical cleaners, which may fade, deform or melt the exterior case. Do not apply a detergent solution to the projector lens as it may scratch the lens.

Cleaning the Projector

Never attempt to clean the interior of the projector. Clean the exterior of the projector only.

1. Make sure the projector is powered-off, cooled down and power cord has been disconnected prior.
2. Clean the exterior of the projector with a moist cloth using a mild detergent.

WARNING:

Do not use lens cleaner, alcohol, benzene, thinner or other chemical cleaners to clean the exterior case.

Customer Support

For most of your questions, it is suggested that you contact your dealer for assistance or ask your dealer to refer you to a service center.

To facilitate after-sales service process, it is suggested that you fill in following information when you purchase this product.

For Your Records

Product Name: _____

Model Number: _____

Serial Number: _____

Purchase Date: _____

Service Information

- **Contact Person** _____
- **Company** _____
- **Address** _____
- **Telephone** _____
- **Fax No.** _____
- **E-mail** _____

Product Warranty : from _____ to _____

Lamp Warranty : from _____ to _____

ENGLISH

Product disposal at end of product life

Please dispose of this product properly at the end of its useful life. Your local waste disposal company may provide information about proper disposal.