USA's primary source for projector lamps
myprojectorlamps

PROJECTOR OWNER'S MANUAL

Boxlight

SP-48Z

Need a replacement lamp for this projector?

www.myprojectorlamps.com

Original manufacturer manual, provided unmodified as a courtesy of MyProjectorLamps.com.
All trademarks belong to their respective owners.

FCC Notice

This equipment has been tested and found to comply with the limits for a Class B digital device, pursuant to part 15 of the FCC Rules. These limits are designed to provide reasonable protection against harmful interference in residential installation. This equipment generates, uses and can radiate radio frequency energy and if not installed and used in accordance with the instructions, may cause harmful interference to radio communications. However, there is no guarantee that interference will not occur in a particular installation. If this equipment does cause harmful interference to radio or television reception, detectable by turning the equipment in question off and on, the user is encouraged to try to correct the interference by one or more of the following measures:

- Reorient or relocate the receiving antenna
- Increase the distance between the equipment and the receiver
- Connect the equipment to an outlet on a different circuit than that which the receiver is connected to
- Or consult the dealer or an experienced radio/TV technician for help.

This device complies with Part 15 of the FCC Rules. Operation is subject to following two conditions:

1.This device may not cause harmful interference, and

2.This device must accept any interference that may cause undesired operation.

Precautions

Safety Instructions

1. Check that the operating voltage of your unit is identical with the voltage of your local power supply.
2. Should any liquid or solid object fall into the cabinet, unplug the unit and have it checked by the qualified personnel before operating it further.
3. Do not place the projector on an unstable stand or table.
4. Unplug the unit from the wall socket if it is not to be used for several days.To disconnect the cord, pull it out by the plug. Never pull the cord itself.
5. The wall socket should be near the unit and easily accessible.
6. Do not place the projector where the cord can be stepped on as this may result in fraying or damage to the lead or the plug. Be alert to tripping hazards.
7. Never look into the projector lens when the lamp is switched on as the bright light can damage your eyes. Never let children look into the lens when it is on.
8. Do not place your hand or objects near the ventilation holes. The air coming out is hot.
9. Never open any covers on the projector except the lamp cover. Dangerous electrical voltages inside the projector can cause severe injury. Except as specifically directed in this Instruction Manual, do not attempt to service this product yourself. Refer all servicing to qualified service personnel.
10. Unplug the projector from the wall socket before cleaning. Use a damp cloth for cleaning the projector housing. Do not use liquid or aerosol cleaners.
11. Keep the plastic packing materials (from the projector, accessories and optional parts) out of the reach of children as these bags may result in death by suffocation. Be particularly careful around the small children.

Cautions

⚠ *The projector is equipped with ventilation holes (intake) and ventilation holes (exhaust). Do not block or place anything near these slots, or internal heat build-up may occur, causing picture degradation or damage to the projector.*

⚠ *When you replace the projector lamp, never touch the new bulb with your bare hands. The invisible residue left by the oil on your hands may be shorten the bulb life. Use lint-free gloves or finger cots are recommended.*

Preventing Internal Heat Build-Up

After you turn off the power with the Power button, do not disconnect the unit from the wall outlet while the cooling fan is still running.

Repacking

Save the original shipping carton and packing material; they will come in handy if you ever to ship your unit. For maximum protection, repack your unit as it was originally packed at the factory.

CONTENTS

6 **Projector Features and Controls**
6 Projector
7 Control Panel
8 Remote Controller
8 Button Function

9 **Getting the Most Out of Your Projector**
9 Remote Controller
9 Auto Off Mode
9 Control Panel

10 **Setup**
10 Unpacking the Projector
11 Setting Up the Projector
12 Connecting to a Computer
13 Connecting to a Video Source
14 Using the Projector
14 Turning the Audio/Visual(A/V) Equipment On and Off
14 Turning the Projector On and Off
15 Focusing and Positioning the Screen Image
15 Operational Indicator(LED)

16 **Projector Control Menus**
16 Changing a Menu Setting
18 Menu Options
19 Input Menu
19 Picture Menu
21 Color Menu

22 Audio Menu
23 MISC Menu
24 Option Menu
26 Language Menu
26 Reset Menu
27 Other Related OSD Menus
27 Video Input Signal
27 Video Menu
28 Other OSD Menus
29 No Input Signal

30 Maintenance
30 Cleaning the Lens
30 Cleaning the Projector Housing
31 Cleaning the Air Filter
32 Replacing the Lamp

33 Technical Specifications

34 Appendix A
34 Preset Signals
35 HDTV Preset Signals

PROJECTOR FEATURES AND CONTROLS

PROJECTOR

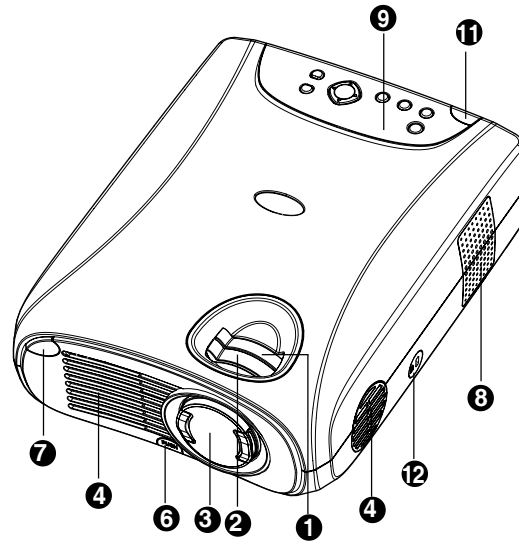

1. Zoom ring
2. Focus ring
3. Lens
4. Ventilation holes (intake)
5. Ventilation holes (exhaust)
6. Adjuster button
7. Front IR remote controller sensor
8. Speakers
9. Control Panel including Power button
10. AC power socket
11. Rear IR remote controller sensor
12. Security lock receptacle
13. Control port
14. Computer IN(D-SUB) connector
15. Monitor OUT
16. S-video input
17. Y connector
18. Cb connector
19. Cr connector
20. Audio input jacks (L & R)
21. Composite Video input jack
22. Lamp cover
23. Air filter

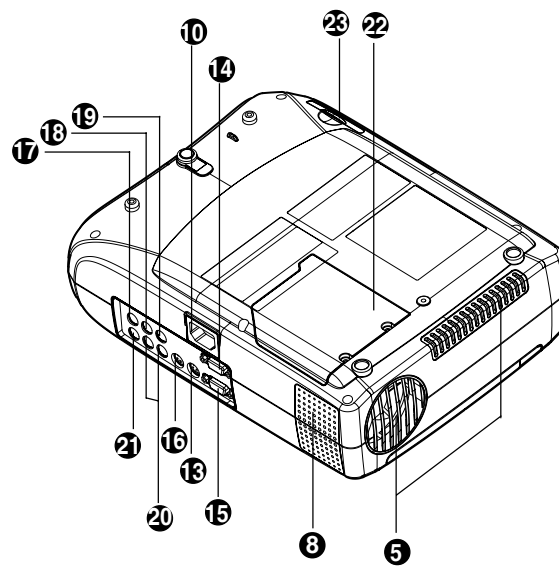

CONTROL PANEL

LED

POWER	Power LED indicator – indicates power to projector.
LAMP	Lamp LED indicator – indicates lamp power.

Button Function

⏻	Turns the projector and lamp ON and OFF.
INPUT	Manually selects an input source.
AUTO	Automatically adjusts frequency and phase.
MENU	Displays (or hides) the on-screen control menus.
(+)	Increases the volume of the projector's speakers.
(-)	Decreases the volume of the projector's speakers.
Cursor Controller (▲/▼/◀/▶)	It can be used as a navigation controller to navigate the projector menus. ▲-Scrolls up through the menu choices. ▼-Scrolls down through the menu choices. ▶-Increases the value setting on the selected sub-menus, or confirms a menu selection. ◀-Decreases the value setting on the selected sub-menus.

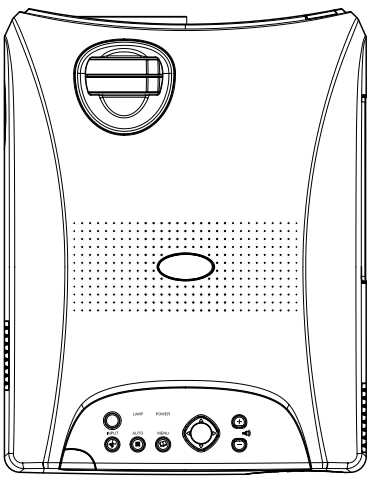

REMOTE CONTROLLER

Button Function

⏻ Power	Turns the projector and lamp ON and OFF.
Menu	Displays (or hides) the on-screen display menus.
▲	Scrolls up through the menu choices.
▼	Scrolls down through the menu choices.
▶	Increases the value setting on the selected sub-menus, or confirms a menu selection.
◀	Decreases the value setting on the selected sub-menus.
❶ Auto	Automatically adjusts frequency and phase.
❷ Source	Manually selects an input source.
❸ Auto Keystone	Automatically adjusts vertical trapezoidal distortion.
❹ Volume	Adjusts the volume of the projector's speakers.
❺ Zoom	Digitally zooms the current image window.
❻ Keystone	Selects vertical trapezoidal distortion.
❼ Mute	Cuts off the sound temporarily.
❽ Freeze	Freezes the current graphics and video image on the screen.
❾ Blank	Cuts off the screen temporarily.

Note:

■ *Press the KEYSTONE button to select the trapezoidal distortion. To adjust the trapezoidal distortion of the projection, press the ◀ or ▶ button.*

GETTING THE MOST OUT OF YOUR PROJECTOR

The projector has a full set of features that allow you to control the settings for video, audio, power management, display parameters, and much more.
To derive the greatest utility from your projector, read this section for a quick summary of the important features.

Remote Controller

The buttons on the Remote Controller allow direct and immediate control of the most commonly used features including source selection, keystone adjustment, volume control, image freeze-frame, zoom, screen blanking, audio muting and power control. Remote Controller buttons can also be used for advanced functions and to access the projector's menu system.

Auto Off Mode

The auto off mode conserves electricity by automatically turning off the lamp if the projector does not receive input signal for a specified period (30 minutes). In the auto off mode, the lamp is turned off, conserving electricity, cooling the projector and extending the life of the lamp. Use the Power button on either the Remote Controller or the Projector Control Panel to turn the projector on again if it has powered off.

Control Panel

The control panel buttons on the top of projector offer access to advanced functions, such as adjusting the brightness and contrast for computer images.

SETUP

This section tells you how to unpack and set up your projector and connect it to other equipment. The projector must be connected to a computer or a video source such as a video tape deck, camcorder, digital camera or laser disk player in order to make a projection.
You may want to connect the projector to both your computer and a video source, or set up the projector for providing audio source. The audio source can be the computer, video source, or another device such as a stereo.

Unpacking the Projector

When you unpack the projector, make sure you have all these components:

- Projector
- Remote Controller (IR)
- Power cord
- Computer cable (D-SUB cable)
- S Video cable
- A/V composite cable (RCA type for composite video & audio)
- Lens cap
- Instruction manual

The following cables are optional accessories:

- Projector carrying case
- Audio cable
- YPbPr/HDTV to D-SUB(When using YPbPr/HDTV as input signal)
- Component Video cable
- Monitor OUT cable (D-SUB cable)

Many of the above optional items may not be required for your particular installation. Retain packaging materials in case you need to move or ship the projector in the future. It should always be transported in its original protective packaging.

Setting Up the Projector

1. Place the projector on a sturdy, level surface within five feet of the computer or video source.

   Caution:

   ⚠ *Do not hold the projector by the lens. This can damage the lens.*

2. Place the projector at the correct distance from the screen. The distance between the projector and the screen determines the actual image size. Use the general guidelines below to determine the correct distance.

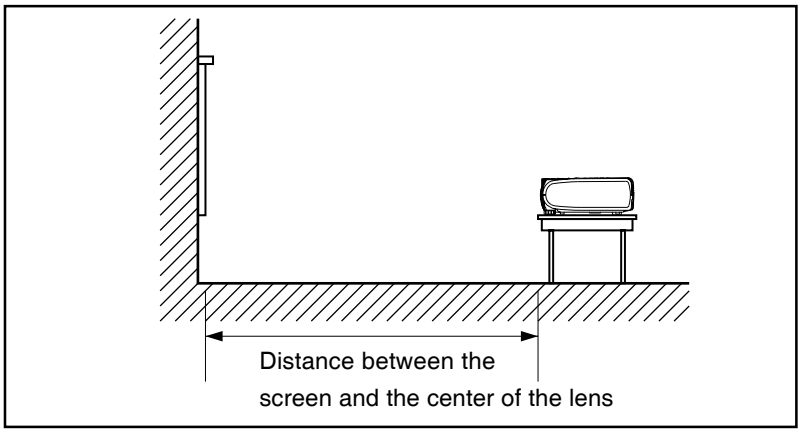

Projector Distance / Projection Size(Diagonal)	1 Meter	2 Meters	2.5 Meters	4 Meters	5 Meters	8 Meters	10 Meters
WIDE	34.3”	68.8”	83.8”	137.2”	167.6”	274.4”	331.4”
TELE	25.9”	51.8”	63.5”	103.6”	125.6”	207.2”	251.2”

3. When replacing batteries on the Remote Controller, take the following precautions:

   ⚠ *Do not recharge used batteries or expose batteries to fire or water.*

   ⚠ *Replace batteries as soon as they run down. If the batteries leak, wipe away the fluid with a soft cloth. If battery fluid gets on your hands, wash them immediately.*

   ⚠ *Remove the batteries if you will not be using the remote controller for a long period of time.*

Connecting to a Computer

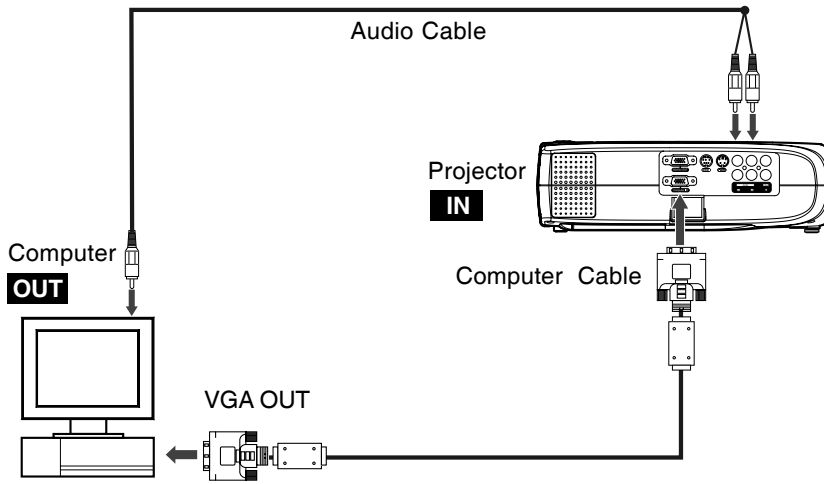

The projector will always project at SVGA (800 x 600) resolution. (SVGA is the native resolution of the projector.) However, you can connect the projector to a computer source capable of displaying VGA (640 x 480), SVGA (800 x 600), XGA (1024 x 768) or SXGA (1280 x 1024) resolutions. The projector will resize VGA, XGA, and SXGA inputs for SVGA projection. The types of computers supported by this projector include IBM, Macintosh and Apple compatible laptop or desktop PCs (PC compatibles).

Note:

If the input source is Computer, it can produce MONITOR OUT function.

Connecting to a Video Source

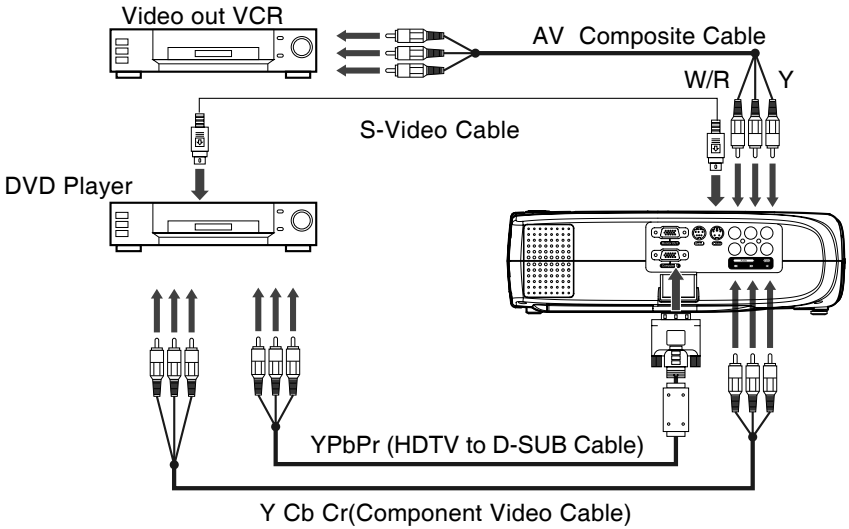

You can connect the projector to almost any common video source - VHS player, DVD player, camcorder, laser disc player or any other compatible video image source. The projector can accept composite, component, or S-Video signals:

- Composite video is characterized by a single-pin "RCA-type" video jack, usually colored yellow.
- Component video (YCbCr) is less common and features three "RCA-type" video jacks, typically colored green, blue and red.
- S-Video is readily identified by a single connector with four small pins.
- Component video (YPbPr) is characterized by D-SUB plug to " RCA-type" video jacks, typically colored green blue and red.

You can connect the projector simultaneously to composite, component, S-Video and YPbPr/HDTV sources. You can select which video source to project using the control panel or remote controller. If the Auto Search feature is ON (see later sections of this manual), the projector will automatically detect and select a source. The projector supports NTSC, PAL and SECAM video formats. The projector will automatically detect and identify the video format. Note, however, whereas the projector can accept multiple simultaneous sources it can only accept one video format at a time.

Note:

The projector is not compatible with a cable TV-style coaxial "F" connector.

Using the Projector

This section describes projector operations:

- Turning the projector and A/V equipment on and off
- Adjusting the projected image
- Projector controls
- Checking the projector status

Turning the Audio/Visual (A/V) Equipment On and Off

Always turn on the projector and related A/V equipment in the following order.

1.Projector
2.Computer
3.Video source
4.Audio source

Turning the Projector On and Off

1.Connect the power cord to the projector.
2.Insert the power plug into a wall outlet.
3.Remove the projector lens cap.
4.Press the Power button (on either the Remote Controller or the Projector Control Panel) to turn on the projector. When the lamp LED indicator lights in green, the projecting image gets full illumination.

Warning:

Never look into the lens when the lamp is on. This can damage your eyes.
It is especially important that children are not allowed to look into the lens.

5.To turn off the projector, press the Power button. A message will appear on the screen for about 10 seconds:

Press power key again to turn off

6.Press the Power button once again(to turn off the power) while the message is still showing on the screen.

Note:

Please wait until the fan motor and the Lamp LED turn off before removing the power cord from the projector.

Focusing and Positioning the Screen Image

After an image appears on the screen, check to see if it is in focus and whether it fits properly on the screen.

- To adjust the focus of the image, rotate the focus ring.
- To adjust the size of the image, rotate the zoom ring. Zooming in to make the image larger or zooming out make it smaller on the screen.

❶ Zoom Ring ❷ Focus Ring ❸ Adjuster Button

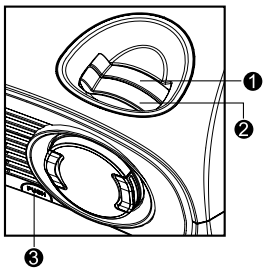

Note:

Push the adjuster button to adjust the projected image position. Hold down the adjuster button to pull the height adjustment. Release the adjuster button and the height adjustment position will be locked.

Operational Indicator (LED)

There are two LEDs on the top of the projector, the Power LED and the Lamp LED. They provide valuable information about the projector.

LED TYPE	COLOR	STATUS	MEANING
Power LED	Green	Solid	The projector is powered and ready.
Power LED	Red	Solid	The projector system has some problems with its fan, so the projector cannot start up.
Lamp LED	Green	Solid	The lamp is in good condition and is projecting at maximum brightness.
Lamp LED	Red	Solid	The lamp has reached its end of life and must be changed soon. The lamp will continue to operate until it fails. Change the lamp and reset the lamp time counter. If the lamp is off, then the ballast will become malfunction.
Lamp LED	Amber	Flashing	The projector is shutting down. The fan motor is cooling the lamp for shutdown. Do not unplug the power cable or turn the power switch off before the Lamp LED turns off. The fan motor will turn off when the lamp has cooled.
Lamp LED	Red	Flashing	Temperature is too high. The lamp will turn off.

PROJECTOR CONTROL MENUS

This section describes how to make various adjustments and settings using the menus.

Changing a Menu Setting

The projector menus can be accessed using either the Projector Control Panel or the Remote Controller.

1.Changing the menu display:

Press the MENU button either on the Remote Controller or the Projector Control Panel.

Each press of the MENU button switches the display format as follows:

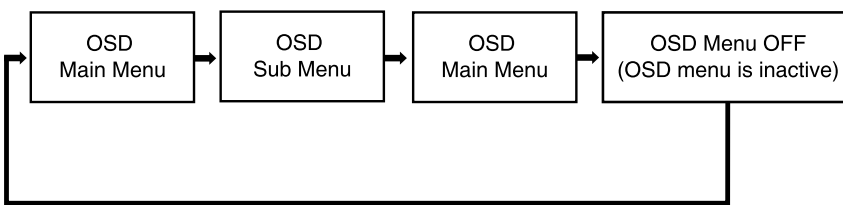

2.Selecting the desired menu or sub-menu(to scroll through the menu choices):

On the Projector Control Panel: press the ▲ or ▼ button.

On the Remote Controller: press the ▲ or ▼ button.

Note:

- *To scroll up: press the ▲ button.*
- *To scroll down: press the ▼ button.*

3. Adjusting the value setting:

On the Projector Control Panel: press the ◄ or ► button.

On the Remote Controller: press the ◄ or ► button.

Note:

- *To increase value: press the ► button.*
- *To decrease value: press the ◄ button.*
- *To confirm the selection on the INPUT, LANGUAGE and RESET Menus, press the ► button.*

Menu Options

The projector is equipped with three types of on-screen display(OSD) menus.
Each OSD menu interface you will see on the screen is depending on the type of input signal.

* The illustrations in this manual are for the purpose of explanation and may differ from the actual setting of your projector.

Input Signal Type	Menu Interface
Computer YPbPr/ HDTV	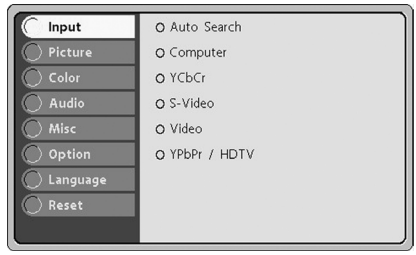 Input, Picture, Color, Audio, Misc, Option, Language,Reset
S-Video Video YCbCr	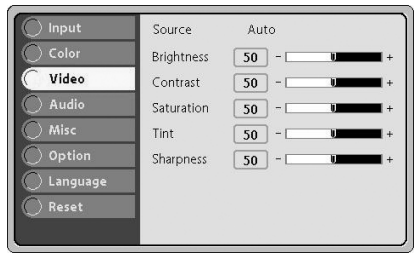 Input, Color, Video,Audio, Misc, Option,Language, Reset
None	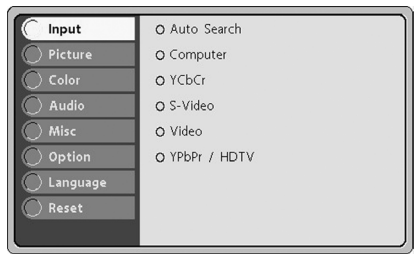 Input, Option, Language,Reset

Input Menu

This menu allows to specify the signal source that you wish to project. This is particularly useful if you have several sources (video and/or computer) connected to your projector. Changing settings procedure (using either the Projector Control Panel or the Remote Controller):

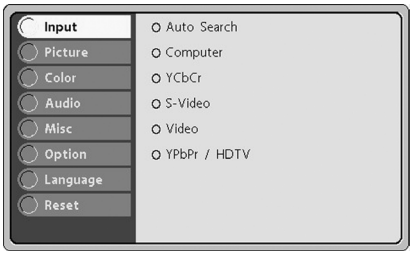

1. Press the MENU button to display OSD menu.
2. Press the ▲ or ▼ button to select INPUT menu.
3. To enter the sub-menu setting, press the ▶ button or the MENU button.
4. Press the ▲ or ▼ button to select the desired input source.
5. Press the ▶ button to confirm the input selection.
6. To exit from the current menu, toggle the MENU button.

The following table provides detail of the available sub-menu choices:

Option	Description
Auto Search	Automatically scans the input source.
Computer	Signal from computer. (desktop or notebook)
YCbCr	Component video signal.
S-Video	S-video signal.
Video	Composite video signal.
YPbPr/ HDTV	Signal from YPbPr/HDTV. (High Definition TV - a high-resolution TV standard, which is part of the group of digital TV standards introduced in USA in late 1998).

Picture Menu

This menu provides precise control of the projected image including:
Brightness, contrast, horizontal position, vertical position, tracking, sync and sharpness (just for computer signal).

Changing settings procedure (using either the Projector Control Panel or the Remote Controller):

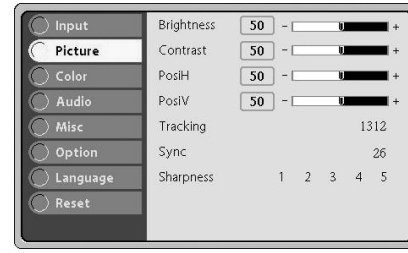

1. Press the MENU button to display OSD menu.
2. Press the ▲ or ▼ button to select PICTURE menu.
3. To enter the sub-menu setting, press the ▶button or the MENU button.
4. Press the ▲ or ▼ button to select the sub-menu item.
5. Press the ◀ or ▶ button to adjust the value of desired sub-menu item.
6. After you have done with the adjustment of a sub-menu item:
   a. To resume changing another sub-menu item: press the ▲ or ▼ button.
   b. To exit from the current menu: toggle the MENU button.

The following table provides detail of the available sub-menu choices:

Sub-Menu	Description
Brightness	The higher the setting, the brighter the image. The lower the setting, the darker the image.
Contrast	The higher the setting, the greater the contrast. The lower the setting, the lower the contrast.
PosiH	Adjusts the horizontal position.
PosiV	Adjusts the vertical position.
Tracking	Adjusts the horizontal pixel of the image.
Sync	Adjusts the dot phase of the input signal. Adjusts the picture to where it looks best.
Sharpness	The higher the setting, the sharper the image. The lower the setting, the softer the image.

Color Menu

This menu provides precise control of the color settings including:
color temperature (preset & user define) and gamma.
Changing settings procedure (using either the Projector Control Panel or the Remote Controller):

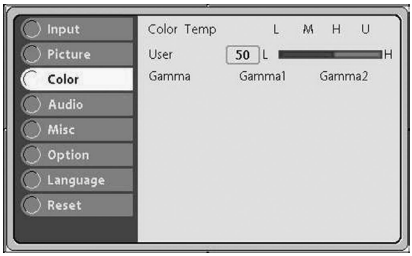

1. Press the MENU button to display OSD menu.
2. Press the ▲ or ▼ button to select COLOR menu.
3. To enter the sub-menu setting, press the ►button or the MENU button.
4. Press the ▲ or ▼ button to select the sub-menu item.
5. Press the ◄ or ► button to adjust the value of desired sub-menu item.
   - On the Color Temp and Gamma sub-menus, press the ◄ or ► button to select the desired setting.
6. After you have done with the adjustment of a sub-menu item:
   a. To resume changing another sub-menu item: press the ▲ or ▼ button.
   b. To exit from the current menu: toggle the MENU button.

The following table provides detail of the available sub-menu choices:

Sub-Menu	Option	Description
Color Temp		Adjusts the whiteness of the screen.
	L(Low)	Gives the white colors a red tint.
	M(Middle)	Gives the white colors a neutral tint.
	H(High)	Gives the white colors a blue tint.
	U(User)	Selects customized color temperature.
User		Manually adjusts color temperature.
Gamma		Selects a gamma correction curve.
	Gamma1	Improves computer's image mode.
	Gamma2	Improves video's image mode.

Note:

The color adjustment on the User setting can only be made if the Color Temp selection is "User".

Audio Menu

This menu allows you to control volume and mute(On/Off) the audio.

Changing settings procedure (using either the Projector Control Panel or the Remote Controller):

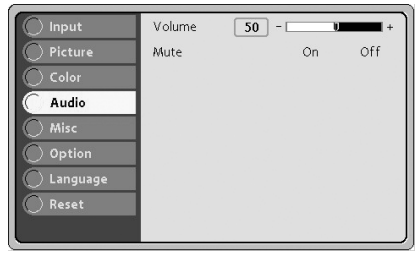

1. Press the MENU button to display OSD menu.
2. Press the ▲ or ▼ button to select AUDIO menu.
3. To enter the sub-menu setting, press the ▶ button or the MENU button.
4. Press the ▲ or ▼ button to select the sub-menu item.
5. Press the ◀ or ▶ button to adjust the value of desired sub-menu item.
   - On the Mute sub-menu, press the ◀ or ▶ button to select the desired setting.
6. After you have done with the adjustment of a sub-menu item:
   a. To resume changing another sub-menu item: press the ▲ or ▼ button.
   b. To exit from the current menu: toggle the MENU button.

The following table provides detail of the available sub-menu choices:

Sub-Menu	Option	Description
Volume		Adjusts the volume.
Mute		Cuts off the sound temporarily.
	On	Mute function is active.
	Off	Mute function is inactive.

MISC Menu

This menu includes projector utilities for vertical keystone, freeze (Yes/No) and blank (Yes/No) mode settings.

Changing settings procedure (using either the Projector Control Panel or the Remote Controller):

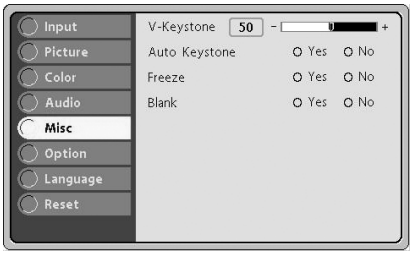

1. Press the MENU button to display OSD menu.
2. Press the ▲ or ▼ button to select MISC menu.
3. To enter the sub-menu setting, press the ▶ button or the MENU button.
4. Press the ▲ or ▼ button to select the sub-menu item.
5. Press the ◀ or ▶ button to adjust the value of desired sub-menu item.
   - On the Auto Keystone, Freeze and Blank sub-menus, press the ◀ or ▶ button to select the desired setting.
6. After you have done with the adjustment of a sub-menu item:
   a. To resume changing another sub-menu item: press the ▲ or ▼ button.
   b. To exit from the current menu: toggle the MENU button.

The following table provides detail of the available sub-menu choices:

Sub-Menu	Option	Description
V-Keystone		Adjusts trapezoidal distortion (vertically) of the picture that may occur depending the projection angle.
Auto Keystone		Adjusts trapezoidal distortion (automatically) of the picture that may occur depending the projection angle.
	Yes	Auto Keystone function is active.
	No	Auto Keystone function is inactive.
Freeze		Freezes the screen.
	Yes	Freeze function is active.
	No	Freeze function is inactive.
Blank		Blanks the screen temporarily.
	Yes	Blank function is active.
	No	Blank function is inactive.

Option Menu

This menu includes projector utilities for OSD timeout, OSD horizontal position, OSD vertical position, rear mode, ceiling mode, aspect ratio, auto off and lamp life indication.

Changing settings procedure (using either the Projector Control Panel or the Remote Controller):

1.Press the MENU button to display OSD menu.

2.Press the ▲ or ▼ button to select OPTION menu.

3.To enter the sub-menu setting, press the ▶button or the MENU button.

4.Press the ▲ or ▼ button to select the sub-menu item.

5.Press the ◀ or ▶ button to adjust the value of desired sub-menu item.

- On the Rear, Ceiling, Aspect Ratio and Auto Off sub-menus, press the ◀ or ▶ button to select the desired setting.
- On the Lamp Life sub-menu, the lamp's lifetime counter is calculated by the projector system.

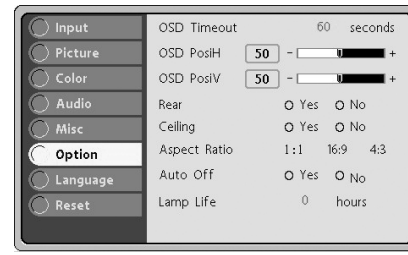

6.After you have done with the adjustment of a sub-menu item:

a.To resume changing another sub-menu item: press the ▲ or ▼ button.

b.To exit from the current menu: toggle the MENU button.

The following table provides detail of the available sub-menu choices:

Sub-Menu	Option	Description
OSD Timeout		Duration OSD menu stays active (at idle state).
OSD PosiH		Adjusts OSD menu display position (horizontally - left & right) on the screen.
OSD PosiV		Adjusts OSD menu display position (vertically - up & down) on the screen.
Rear		The image is reversed horizontally.
	Yes	Rear projection is active.
	No	Rear projection is inactive.
Ceiling		The image is inverted vertically.
	Yes	Ceiling projection is active.
	No	Ceiling projection is inactive.
Aspect Ratio		HDTV and video display selection.
	1:1	Selects 1:1 aspect ratio.
	16:9	Selects 16:9 aspect ratio.
	4:3	Selects 4:3 aspect ratio.
Auto Off		Automatically turns off the lamp if the projector does not detect an input signal for specified time period (30 minutes).
	Yes	Auto Off is active.
	No	Auto Off is inactive.
Lamp Life		Displays lamp's lifetime counter (by hour).

Note:

Lamp life counter is displayed in read-only format, and this setting cannot be manually adjusted.

Language Menu

This menu enables you to select the language used in the OSD (on-screen display) menus.

Changing settings procedure (using either the Projector Control Panel or the Remote Controller):

1. Press the MENU button to display OSD menu.
2. Press the ▲ or ▼ button to select LANGUAGE menu.
3. To enter the sub-menu setting, press the ▶button or the MENU button.
4. Press the ▲ or ▼ button to select the desired OSD language.
5. Press the ▶button to confirm the OSD language selection.
6. To exit from the current menu, toggle the MENU button.

Note:

This projector supports multilanguage.

Reset Menu

This menu allows you to restore all projector settings and adjustments back to the factory defaults.

Changing settings procedure (using either the Projector Control Panel or the Remote Controller):

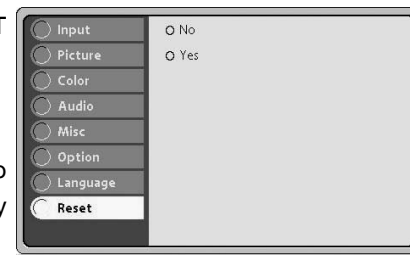

1. Press the MENU button to display OSD menu.
2. Press the ▲ or ▼ button to select RESET menu.
3. To enter the sub-menu setting, press the ▶button or the MENU button.
4. Press the ▲ or ▼ to select YES if you want to restore all projector settings to the factory defaults.
5. Press the ▶ button to confirm the selection.
6. To exit from the current menu, toggle the MENU button.

Other Related OSD Menus

Following are the descriptions on the on-screen display menus with video input sources and without input source attached to your projector.

Video Input Signal

If the input signal comes from S-video, composite video or component video (YCbCr), you may see VIDEO menu interface.

Video Menu

This menu enables you to adjust the video format settings, brightness, contrast, saturation, tint and sharpness.

Changing settings procedure (using either the Projector Control Panel or the Remote Controller):

1. Press the **MENU** button to display OSD menu.
2. Press the ▲ or ▼ button to select VIDEO menu.
3. To enter the sub-menu setting, press the ▶ button or the **MENU** button.
4. Press the ▲ or ▼ button to select the sub-menu item.
5. Press the ◀ or ▶ button to adjust the value of desired sub-menu item.

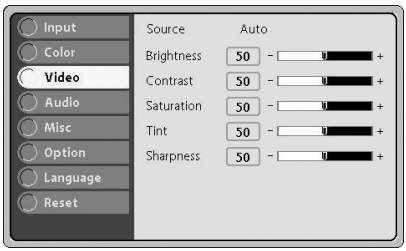

■ On the Source sub-menu, press the ◀ or ▶ button to select the desired setting.

6. After you have done with the adjustment of a sub-menu item:
   a. To resume changing another sub-menu item: press the ▲ or ▼ button.
   b. To exit from the current menu: toggle the **MENU** button.

The following table provides detail of the available sub-menu choices:

Sub-Menu	Option	Description
Source		Video format selection.
	Auto	Automatically scans video format.
	PAL 4.43	Sets video format as PAL 4.43.
	NTSC 4.43	Sets video format as NTSC 4.43.
	PAL N	Sets video format as PAL N.
	NTSC 3.58	Sets video format as NTSC 3.58.
	SECAM	Sets video format as SECAM.
Brightness		The higher the setting, the brighter the image. The lower the setting, the darker the image.
Contrast		The higher the setting, the greater the contrast. The lower the setting, the lower the contrast.
Saturation		The strength of a color especially the degree to which it lacks its complimentary color. The higher the setting, the stronger color strength. The lower the setting, the weaker color strength.
Tint		Adjusts the projection between red and green color.
Sharpness		The higher the setting, the sharper the image. The lower the setting, the softer the image.

Other OSD Menus

Other OSD menus operation and description are the same as the previous page.

- Input Menu: refer to page 19.
- Color Menu: refer to page 21.
- Audio Menu: refer to page 22.
- MISC Menu: refer to page 23.
- Option Menu: refer to page 24.
- Language Menu: refer to page 26.
- Reset Menu: refer to page 26.

No Input Signal

If there is no input signal attached with your projector, you press the MENU button (on either the Projector Control Panel or the Remote Controller), one of the following on-screen display menus will appear on the screen.

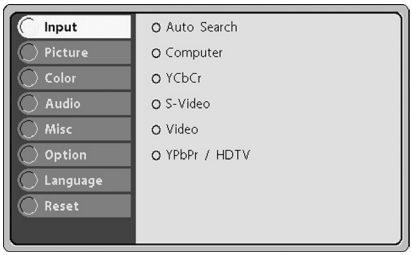

Input Menu
(refer to page 19)

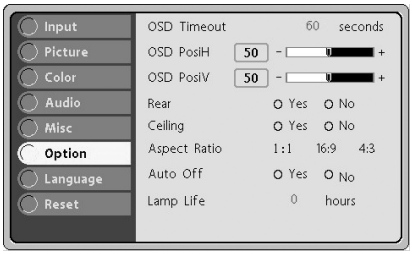

Option Menu
(refer to page 24)

Language Menu
(refer to page 26)

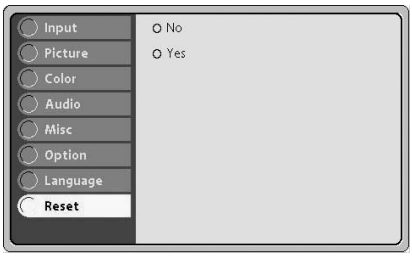

Reset Menu
(refer to page 26)

MAINTENANCE

The projector needs little maintenance. You should keep the lens clean as dust, dirt or spots will project on the screen and diminish image quality.
You will also need to clean the air filter located at the bottom of the projector periodically. It is important to keep the air filter clean because a clogged air filter prevents proper ventilation which is necessary to cool the projector and prevent it from overheating.
The only part you should replace yourself are the lamp and the air filter.
If any other parts need replacing, contact your dealer or qualified service personnel.
When cleaning any part of the projector, always switch off and unplug the projector first.

Warning:

Never open any of the covers on the projector except the lamp and air filter covers. Dangerous electrical voltages inside the projector can cause severe injury. Except as specifically indicated in this Instruction Manual, do not attempt to service this product yourself. Refer all servicing to qualified service personnel.

Cleaning the Lens

Clean the lens whenever you notice dirt or dust on the surface. Wipe the lens surface gently with a soft, dry, lint-free cloth.
To remove dirt or stains on the lens, moisten a soft cloth with water and a neutral detergent and gently wipe the lens surface.

Cleaning the Projector Housing

To clean the projector housing, first unplug the power cable. To remove dirt or dust, wipe the housing with a soft, dry, lint-free cloth. To remove stubborn dirt or stains, moisten a soft cloth with water and a neutral detergent. Then wipe the housing. Do not use alcohol, benzene, thinners or other chemical detergents as these can cause damage to the housing.

Cleaning the Air Filter

The air filter, which is located at the bottom of the projector, should be cleaned after every 100 hours of use. If it is not cleaned periodically, it can become clogged with dust and prevent the projector from being ventilated properly. This can cause overheating and damage the projector.

To clean the air filter:

1. Switch the projector off and unplug the power cable from the wall socket.
2. Place a protective sheet (cloth) beneath the projector. Turn the projector over so you can see its underside.
3. Remove the air filter by pulling the filter tab.
4. Clean the air filter.

   Caution:

   ⚠ *To clean the filter, you are advised to use a small vacuum cleaner designed for computers and other office equipment.*

   ⚠ *If the dirt is difficult to remove or if the filter is torn, replace it.*
5. Replace the filter.
6. Plug the power back into the projector.

Note:

Be sure that the projector is stable after turning it over. When replacing the filter, make sure it is inserted in the correct direction as shown illustration.

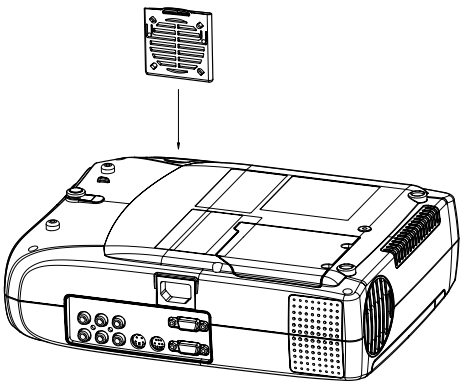

Replacing the Lamp

The projector lamp used for the light source has a certain life. It is time to replace them lamp when:

- When lamp dims, the projected image gets darker or starts to deteriorate.
- The projector lamp LED indicator turns to red (See page 15).

Caution:

⚠ *The lamp becomes high temperature after turning off the projector with the power button. If you touch the lamp, you may scald your finger. When you replace the lamp, wait for at least an hour for the lamp to cool. Be sure to turn off the projector and unplug the power cord before replacing the lamp.*

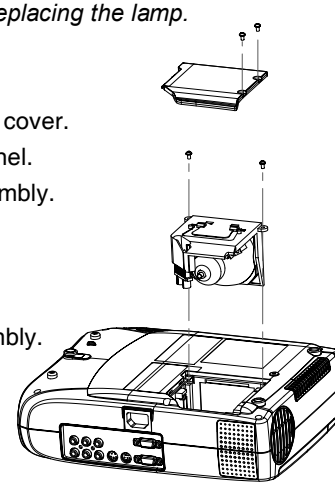

1. Turn off the projector and unplug the power cable.
2. Turn the projector over so you can access the lamp cover.
3. Remove the access panel screws and open the panel.
4. Remove the screws on the bottom of the lamp assembly.
5. Grasp the lamp handle and pull the lamp assembly directly out of the projector.
6. Replace with the new lamp.
7. Place back the screws on the bottom of lamp assembly.
8. Place the panel and screw back the screws on the lamp cover.

Note:

- *Be sure not to touch the optical surfaces with your fingers. Lint-free gloves or finger cots are recommended.*
- *Do not put your hands into the lamp replacement spot, or not fall any liquid or object into it to avoid electrical shock or fire.*
- *Be sure to turn off the projector and unplug the power cord before replacing the lamp.*

TECHNICAL SPECIFICATIONS

Projection System	3 panel 0.7" LCD projector
Native Resolution	800x600 (480,000 dotx3)
Image Brightness	1400 ANSI Lumens (TYP)
Uniformity	85%
Lens	Manual Zoom (1.3X)
Focal Length	21.5~28mm
Contrast Ratio	500:1(B/W)
Aspect Ratio	4:3, supports 16:9
Screen Size	30''~300''
Lamp	180W NUP
Projection Type	Front, Rear, Ceiling, Rear+Ceiling
Video Input	PAL, NTSC, SECAM
Input Source	Computer, YPbPr/ HDTV, YCbCr, S-Video, Video
Scanning Frequency	
Horizontal Freq.	15~79KHz
Vertical Freq.	50~85Hz
Pixel Rate	12~135MHz
Digital Keystone Correction	±15 degrees (digital)
Analog RGB (input signal)	D-SUB connector
HDTV Display (YPbPr)	480p(60Hz), 720p(60Hz), 1080i(30Hz), 576p(50Hz)
Integrated Speaker	1W x 2
Audible Noise	35dB
Remote Control	Multifunctional
OSD Language	Multilanguage
Operational Ambient	Temperature: 5~35°C Humidity: 35~85%
Certification	UL, CE, FCC Class B, VCCI, C-Tick, CCC
Power Supply	AC 100~240V, 50~60Hz
Power Consumption	240 Watts
Dimension (W x D x H)	225 x 280 x 80 mm (8.86" x 11" x 3.15")
Weight	3.0 kg/6.6 lb

Design and Specifications are subject to change without prior notice.

APPENDIX A

Preset Signals

Preset signal		fH (kHz)	fV (Hz)	Sync	Size
Video 60 Hz		15.734	59.940		
Video 50 Hz		15.625	50.000		
Component 60 Hz		15.734	59.940	S on G/Y or Composite Sync	
Component 50 Hz		15.625	50.000	S on G/Y or Composite Sync	
640 x 350	VGA mode 1	31.469	70.086	H(+), V(-)	800
	VGA VESA 85 Hz	37.861	85.080	H(+), V(-)	832
640 x 400	VGA 85Hz	37.861	85.080	H(-), V(+)	832
720 x 400	VGA mode 2	31.500	70.087	H(-), V(+)	900
	VGA VESA 85 Hz	37.927	85.038	H(-), V(+)	936
640 x 480	VGA mode 3	31.469	59.940	H(-), V(-)	800
	VGA VESA 72 Hz	37.861	72.809	H(-), V(-)	832
	VGA VESA 75 Hz	37.500	75.000	H(-), V(-)	840
	VGA VESA 85 Hz	43.269	85.008	H(-), V(-)	832
800 x 600	SVGA VESA 56 Hz	35.156	56.250	H(+), V(+)	1024
	SVGA VESA 60 Hz	37.879	60.317	H(+), V(+)	1056
	SVGA VESA 72 Hz	48.077	72.188	H(+), V(+)	1040
	SVGA VESA 75 Hz	46.875	75.000	H(+), V(+)	1056
	SVGA VESA 85 Hz	53.674	85.061	H(+), V(+)	1048
1024 x 768	XGA VESA 60 Hz	48.363	60.004	H(-), V(-)	1344
	XGA VESA 70 Hz	56.476	70.069	H(-), V(-)	1328
	XGA VESA 75 Hz	60.023	75.029	H(+), V(+)	1312
	XGA VESA 85 Hz	68.677	84.997	H(+), V(+)	1376
1152 x 864	SXGA VESA 70 Hz	63.995	70.016	H(+), V(+)	1472
	SXGA VESA 75 Hz	67.500	75.000	H(+), V(+)	1600
	SXGA VESA 85 Hz	77.487	85.057	H(+), V(+)	1568
1280 x 960	SXGA VESA 60 Hz	60.000	60.000	H(+), V(+)	1800
	SXGA VESA 75 Hz	75.000	75.000	H(+), V(+)	1680
1280 x 1024	SXGA VESA 60 Hz	63.981	60.020	H(+), V(+)	1688

HDTV Preset Signals

Preset Signals	Horizontal Active Pixel	Vertical Active Pixel	fH(kHz)	fV(Hz)
480p	720	480	31.469	59.940
720p	1280	720	45.000	60.000
1080i	1920	1080	33.716	29.970
576p	720	576	31.250	50.000

Monitor OUT cable (for data)

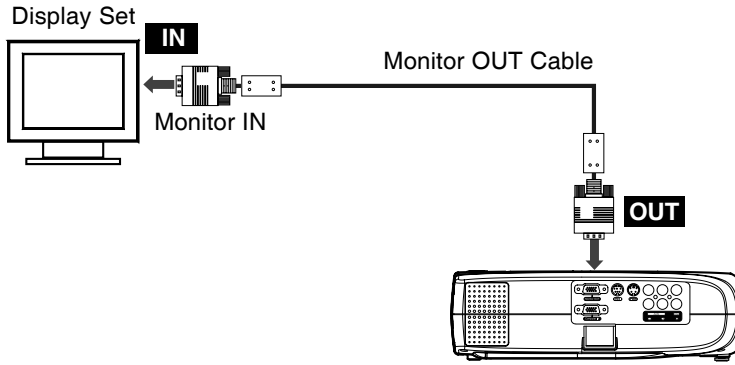

Connecting the Computer (data)

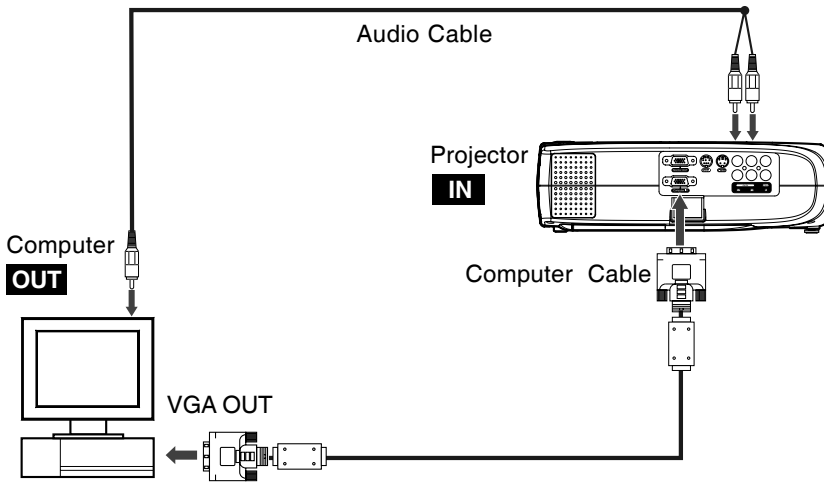

Connecting the HDTV (data)

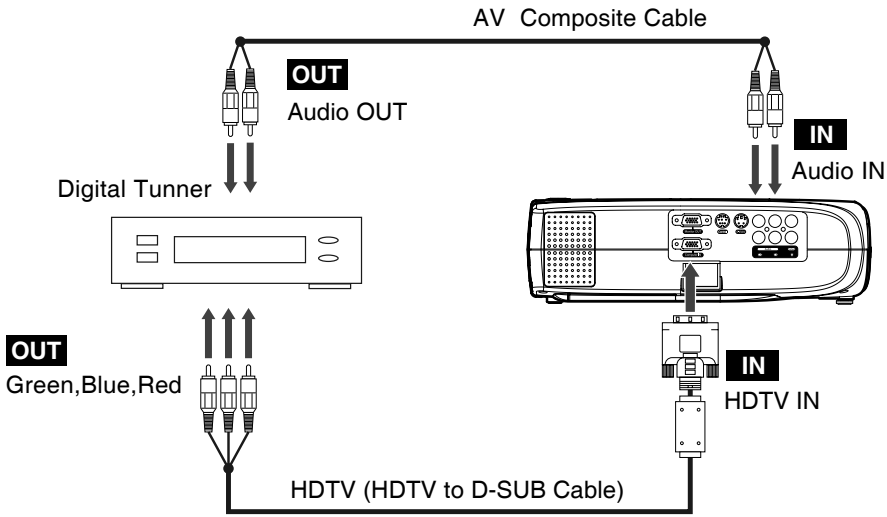
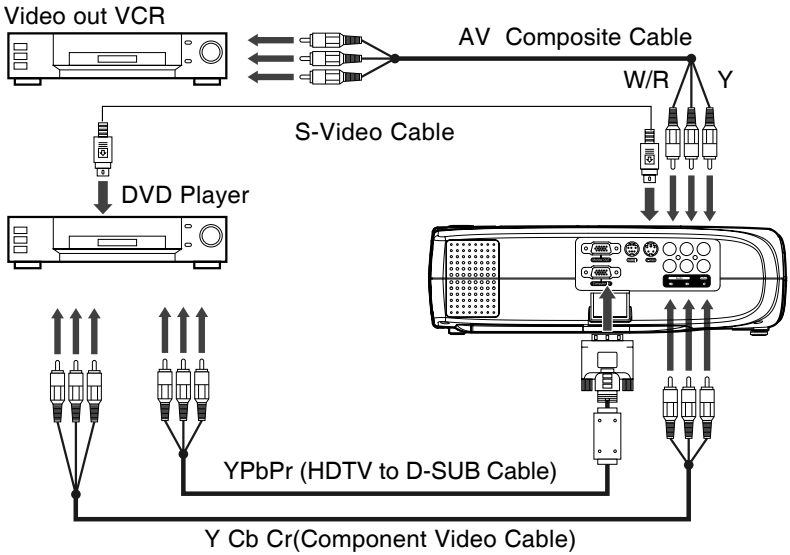
Connecting to a Video Source (S-Video, Component, Composite)