USA's primary source for projector lamps

myprojectorlamps

PROJECTOR OWNER'S MANUAL

Boxlight

PRO80S3

Need a replacement lamp for this projector?

www.myprojectorlamps.com

Original manufacturer manual, provided unmodified as a courtesy of MyProjectorLamps.com.
All trademarks belong to their respective owners.

BOXLIGHT PRO80S3 Projector

User's Manual

For Controller Firmware Revision 0.73
and Motor Control Firmware Revision 2.0

7 July 2008

BOXLIGHT, Inc.
NE 151 Highway 300, Suite A
PO Box 2609
Belfair, WA 98528

For Controller Firmware Revision 4B/6.3 2007.0206

1. Introduction

The Boxlight PRO80S3 Projector is a three-chip DLP projector with a native resolution of 1280x720 pixels (16:9 aspect ratio). The projector accepts 720p video through a DVI-D connector on the rear panel.

1.1 Controllers

The projector is controlled by a pair of MTV312M64 microcomputers. The first is the main controller and is responsible for lamp ballast and formatter initialization. It continuously monitors the state of the formatters, the ballast and the video input primarily to prevent the lamp from extinguishing due to loss of video or unintentional resetting of the formatters due to power fluctuations. Communication with the controller is through an RS-232 interface using a simple command/parameter protocol. The second processor manages the IR remote control functions: lens shift, focus and zoom. It has no external communications interface except the IR receiver.

1.2 Rear Panel Connectors, Switches and Displays

There are four I/O connectors, two switches and nine LEDs on the rear panel.

Rear Panel Connectors, Switches and Displays	
Connectors	
Connector/Switch/LED	Purpose
DVI-D	720p Video Input. There is no scaler on board.
DB-9F	Serial Communications with main µC – 9600,8,N,1
	Film Projector Lockout Connector
RJ-45	NIC
Switch	
2-position Rocker Switch	Located just about the power connector – System Power ON/OFF
3-position Rocker Switch	Soft Power ON/OFF and Shutter Control
LEDs	
RED/GREEN LED	Power State – located to the left of the Power/Shutter Control Switch
8 GREEN LEDs	Projector Status – Located to the left of the DVI Connector

Multicolor LED Power Sequence State	
Color	State
RED	Standby
GREEN	Power On or Power-up Sequence
YELLOW (GREEN + RED)	IF some STATUS LEDs ON – 5 minute power-down ELSE power-off sequence

Status LED Operation		
STATUS LED	When ON Continuously	When Flashing (or OFF)
LAMP DOOR	Lamp Door Interlock OK Lamp Thermal Switch Closed	Lamp Door Open or Lamp Thermal Switch Open - Shutdown
FAN	Fans OK	Fan Failure – Shutdown
LAMP	Lamp Struck and Operating	Lamp Extinguished Lamp Life time over system limited (1470 hours)
VIDEO SIGNAL	Video Signal Detected	No Video
FORMATTER	Formatters Initialized and Operating	Formatter Failure (usually a communication failure) - Shutdown
BALLAST TEMP	Ballast Temperature OK	Ballast Temperature High – Shutdown
READY	90 Second Lamp Cool-down Timer Expired, READY for Power-up or Re-strike	[READY OFF] 90 Second Lamp Cool-down Cycle in Progress
SHUTTER	Shutter OPEN NORMAL Projection Mode	Shutter CLOSED CURTAIN mode

NOTE: There may be as much as a 2 second delay between an event that will cause a change in the STATUS LEDs, e.g., SHUTTER OPEN, and the actual display update.

1.3 Power Sequencing

1.3.1 STANDBY

When the main power switch is turned ON, the projector comes up in STANDBY mode. It may be left in this state indefinitely. Both controllers and the RS-232 circuitry are powered so that the unit can respond to serial commands, the IR Remote Control or the rear panel switch. The ballasts, fans and formatters are not energized.

Note: The IR Remote POWER button is always active but the other buttons may be disabled. If the unit is powered up using the IR Remote, all IR commands will be enabled. If the unit is powered up using the rear panel switch or via the serial port, only the IR POWER button will be active. IR Remote buttons may be enabled or disabled with the **IR+** and **IR-** serial commands.

The projector may then be powered UP or DOWN using any of the methods above. The rear panel switch is multifunctional. The following operation description assumes that the main power switch is ON:

If the projector is in STANDBY, the multicolor LED to the left of the switch will glow RED and on the 8 LED status display, the READY LED will be ON. (*If there were any problems encountered during the previous power-on cycle, other LEDs may be flashing*.) Depressing the left side of the switch momentarily (1/2 second or more) will power up the unit, turning on the lamp and initializing the formatters. The multicolor LED will glow GREEN. The projector will come up in CURTAIN projection mode with the shutter closed. The STATUS LEDs will display the progress of the power-up sequence. When all of the LEDs except for the SHUTTER LED are lit, the shutter may be opened.

1.3.2 POWER ON

If the projector is POWERED UP, a momentary depression of the right side of the switch (1/2 second or more) will open the SHUTTER and put the formatters in NORMAL PROJECTION MODE. Subsequent depressions will toggle between NORMAL MODE/SHUTTER OPEN and CURTAIN MODE/SHUTTER CLOSED.

Depressing the left side of the rocker switch will cause the SHUTTER to close and the formatters to go to CURTAIN MODE and also initiates a 5-MINUTE POWER DOWN cycle. During this time the lamp, fans and formatters remain active. The multicolor LED will glow YELLOW (both the RED and GREEN are ON). The STATUS LEDs should all be ON except for SHUTTER. If no other action is taken for the next 5 minutes, the projector will go through the 60 SECOND POWER OFF sequence: the lamp is extinguished and the fans are left running for 60 seconds before going back to STANDBY. If the shutdown was not due to some anomaly, e.g., a fan failure, all of the STATUS LEDs will be OFF. If there was an anomaly, one or more may be flashing.

The READY LED will go OFF when the lamp is extinguished. It will go back ON after 90 seconds indicating that the lamp may be re-struck. A command to re-strike via any of the three methods - serial, IR or switch – may be issued at any time but the re-strike will not occur until the 90-second lamp cool-down has expired.

1.3.3 5 MINUTE POWER DOWN

If the projector is in the 5 MINUTE POWER DOWN sequence, a momentary depression of the left side of the switch (1/2 second or more) will initiate the 60 SECOND POWER OFF sequence. The 5 MINUTE POWER DOWN may be canceled by issuing an **ON** or **OPEN** command through the serial port, by depressing the right side of the rocker switch or – if the IR remote is enabled - depressing the **BLANK** button to open the SHUTTER. The multicolor LED will again glow GREEN.

1.3.4 60 SECOND POWER OFF

The 60 SECOND POWER OFF sequence first extinguishes the lamp, extinguishes the STATUS LEDs and resets the 90 second lamp cool-down timer. No re-strike will be permitted until it times out. If no further action is taken, after 60 seconds the main power will be turned off – the fans go OFF - and the projector will be back in STANDBY.

Commands to restart the projector may be issued before the 60 SECOND POWER OFF sequence completes: serial **ON** command, IR **POWER** button or left rocker switch. 60 SECOND POWER OFF will be canceled but the lamp will not re-strike until the 90 second cool-down period has expired. The POWR STATE LED will show GREEN.

Power and Shutter Operation			
Current State	Power LED	Action	Resulting State
STANDBY	RED	Serial Command – ON Rocker Switch - depress Left Side ½ second or more IR Remote - depress POWER 2 seconds or more	POWER ON
POWER ON	GREEN	Serial Command – OFF Rocker Switch - depress Left Side ½ second or more IR Remote - depress POWER 2 seconds or more	5 MINUTE POWER DOWN
5 MINUTE POWER DOWN	YELLOW	Serial Command – ON or OPEN Rocker Switch - depress Right Side ½ second or more (shutter OPEN) IR Remote – depress BLANK (if IR enabled)	POWER ON Power Down Cancelled
		Serial Command – OFF Rocker Switch - depress Left Side ½ second or more IR Remote - depress POWER 2 seconds or more	60 SECOND POWER OFF
60 SECOND POWER OFF	YELLOW	Wait 60 seconds – no additional action required	STANDBY
		Serial Command – ON Rocker Switch - depress Left Side ½ second or more IR Remote - depress POWER 2 seconds or more	POWER ON Lamp re-strike after 90 second lamp cool-down
SHUTTER CLOSED	GREEN or YELLOW	Serial Command – OPEN Rocker Switch - depress Right Side ½ second or more (shutter OPEN) IR Remote - depress BLANK (if IR enabled)	SHUTTER OPEN Cancel 5 MINUTE POWER DOWN if in progress
SHUTTER OPEN	GREEN	Serial Command – CLOSE Rocker Switch - depress Right Side ½ second or more (shutter OPEN) IR Remote - depress FREEZE (if IR enabled)	SHUTTER CLOSED
POWER ON, SHUTTER CLOSED, FILM PROJECTOR INTERLOCK ACTIVE	GREEN	Serial Command – no command available Rocker Switch - depress Right Side 5 seconds or more to override Film Projector Interlock IR Remote - no command available	SHUTTER OPEN Override Film Projector Lockout

1.4 Serial Communications

The controller UART must service communications from two sources: the RS-232 interface via the DB-9 connector on the rear panel and the NIC interface. The NIC card controls a multiplexed that switches the UART between these two sources. The controller firmware services three different command sets: one from the NIC card (which is not specified in this document) and two from the RS-232 port. These two will be referred to as *human* and *machine* commands. The *human* interface is a verbose natural language interface that is intended for manufacturing and maintenance operations via a PC running a terminal program attached to the port. Incoming character are typically echoed back to the terminal and a variety of status messages are routinely sent, especially during power-up up and down sequences and when system anomalies are detected and corrected. The *machine* interface is a terse command set. Incoming characters are not echoed and no data is sent to the host unless requested.

The controller's UART is selectable at 9600 or 19200 baud, 8-bits, no parity and 1 stop bit. The receiver is interrupt driven with a 64 byte queue. The transmitter is polled and has no queue. XON/XOFF (**^Q/^S**) flow control is implemented in both directions. The DB9-F connector is wired as a standard PC computer peripheral and may be connected to a PC running an ASCII terminal program with a straight-through serial extension cable – not a null-modem.

1.5 Film Projector Lockout

The film projector lockout feature uses an external signal control either turning the projector on/off or closing/opening the shutter depending if the film projector lockout mode has been set to lock out or power control mode. See the command **FPOL** for more details.

1.6 Enhanced Color Correction (P7)

Commands have been included to utilize Texas Instruments' Enhanced Color Correction Algorithm. When viewing REC709 images use Entertainment Experiences' film look target color gamut by selecting index 5. When viewing Tristimulus images use Entertainment Experiences' XYZ target color gamut by selecting index 6. See the **ECC** command for more details.

1.7 Ambient Light Compensation

Commands have been included to utilize Texas Instruments' Dgamma table selection. There are three Entertainment Experience dgamma tables provided to compensate for low, medium and high ambient room light levels. For low light levels use dgamma table 5. For medium light levels use dgamma table 9/10. For high light levels user dgamma table 14. See the command **GAMMA** for more details.

1.8 Lamp Module Replacement

High pressure lamp may explode if improperly handled. Refer servicing to qualified service personnel. The customer should never attempt to disassemble the lamp or to dispose of the lamp casing other than by returning to the dealer. If the lamp breaks, leave the area immediately and stay away for at least 30 minutes and ventilate the room so as not to inhale the mercury vapor. If you inhale the mercury vapor, see a physician immediately and follow their instructions. Lamp replacement is recommended after 3000 hours of use. Wait 60 minutes after turning off and unplugging the projector power cord before performing the lamp replacement.

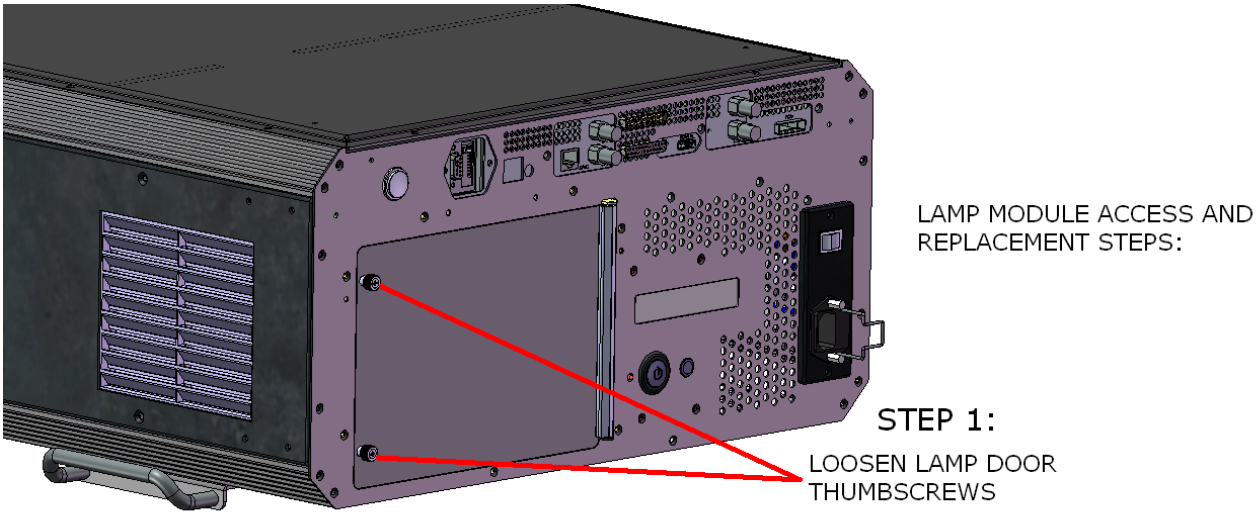

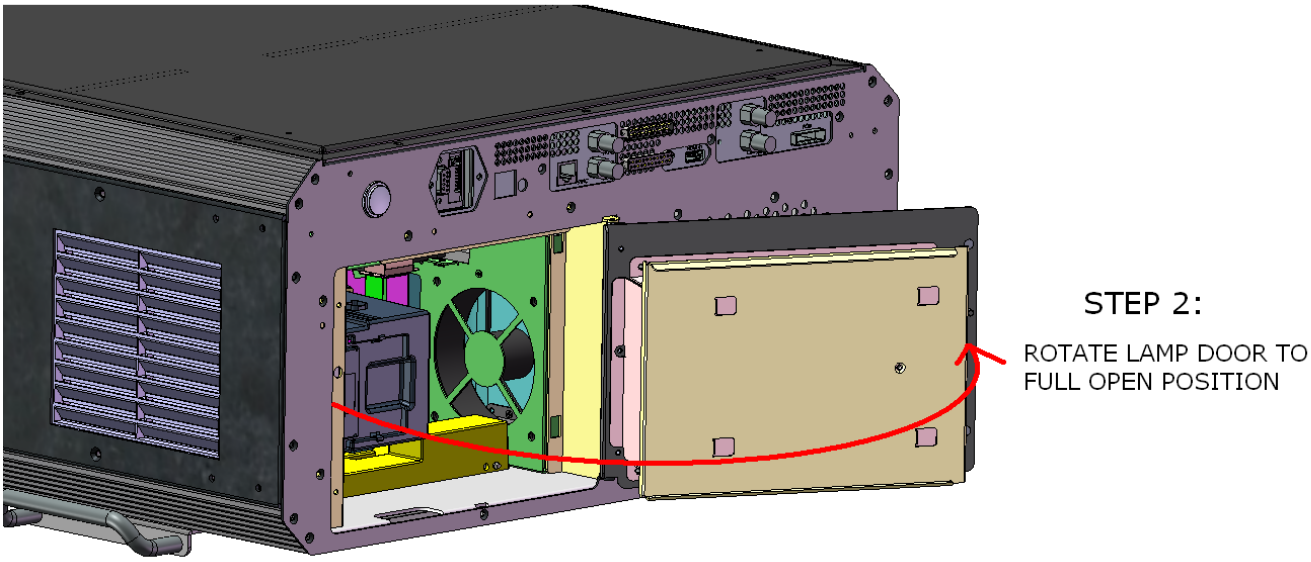

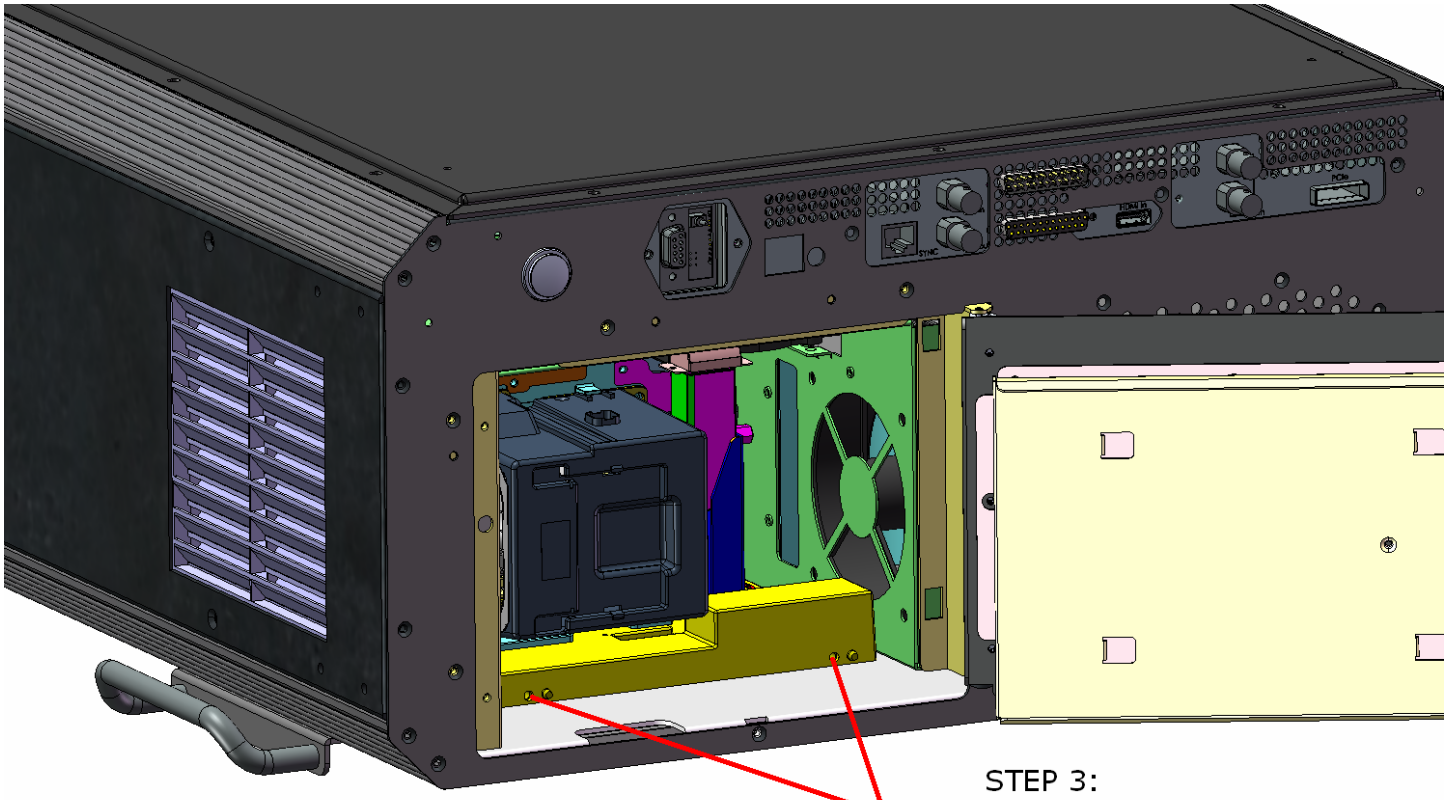

STEP 3:

REMOVE LAMP TRAY SECURING SCREWS

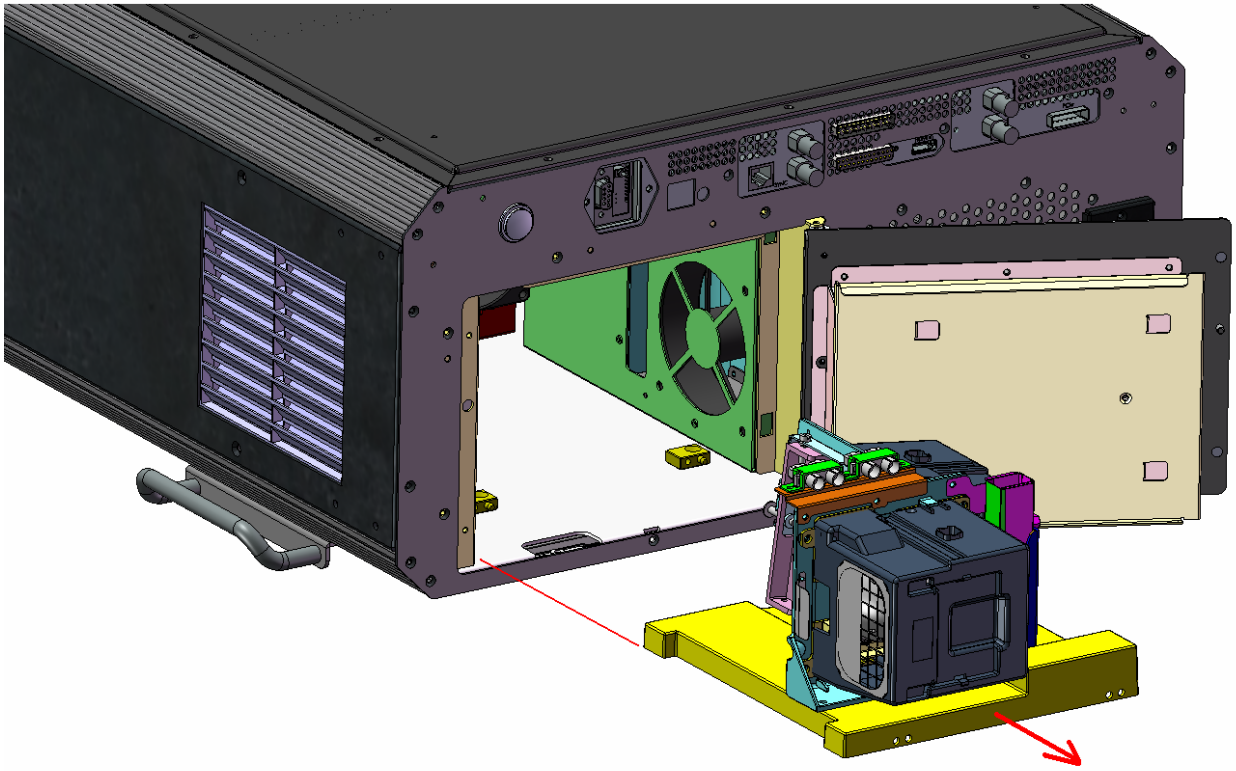

STEP 4:

EXTRACT LAMP TRAY FROM ENCLOSURE

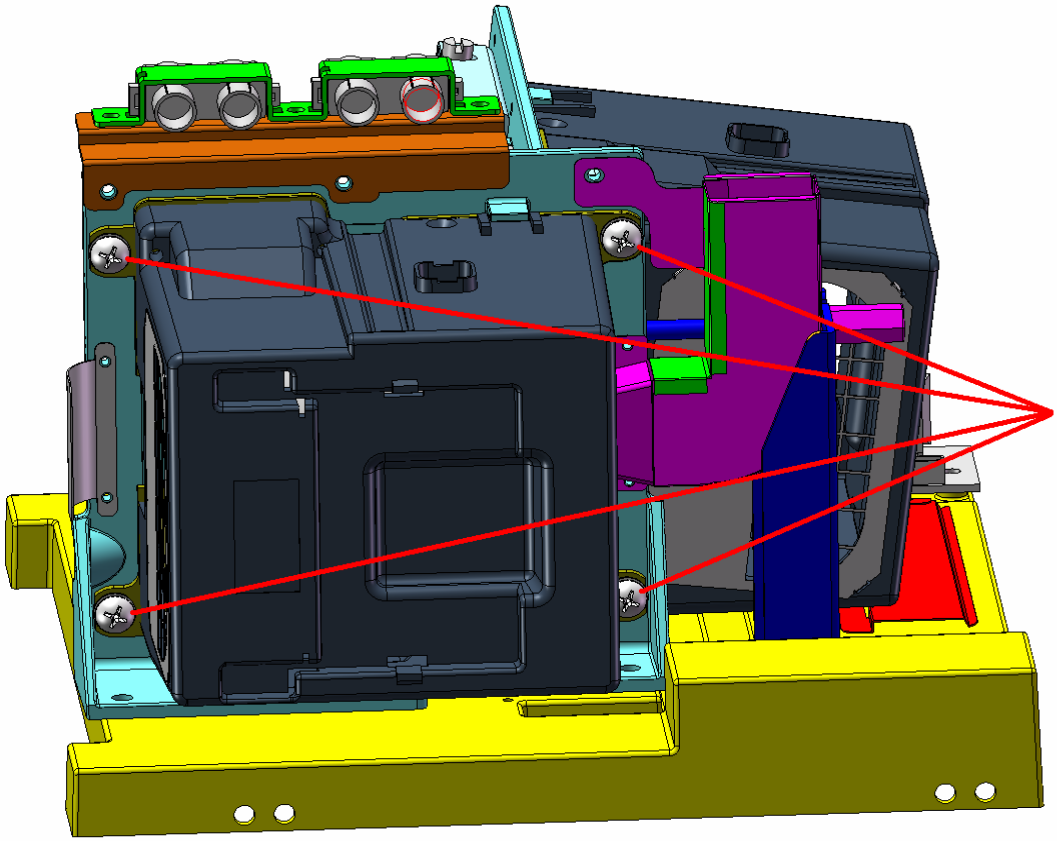

STEP 5:

REMOVE LAMP MODULE SECURING SCREWS

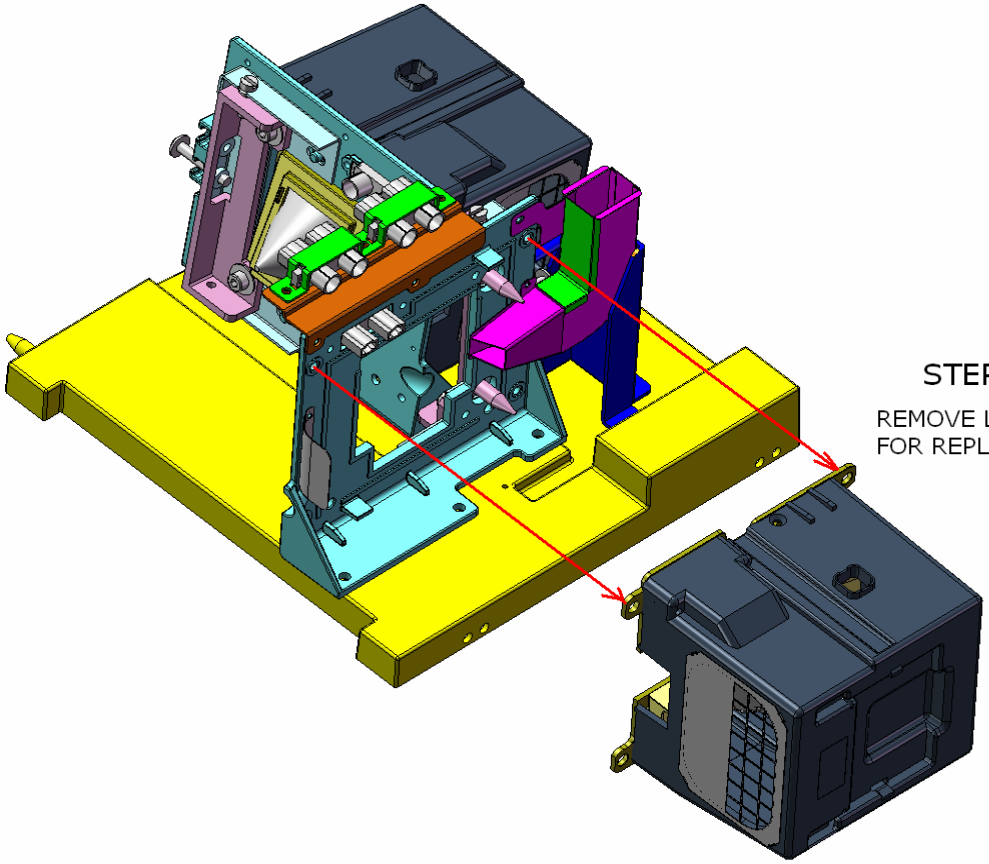

STEP 6:

REMOVE LAMP MODULE FOR REPLACEMENT

1.9 Filter Replacement

If the air filter is clogged with dust it can cause the projector to overheat , cause component failure or even catch on fire. The filter should be replaced when clogged or when 10,000 hours of use has occurred. Contact the dealer to order a new filter, never reuse an old filter. To replace the filter follow the steps that are provided in the following pages.

STEP 1: Remove the 2 screws.

STEP 2: Lower the cover.

STEP 3: Remove the filter.

STEP 4: Install the new filter, replace the filter cover and insert the 2 screws.

1.10 Remote Control Key

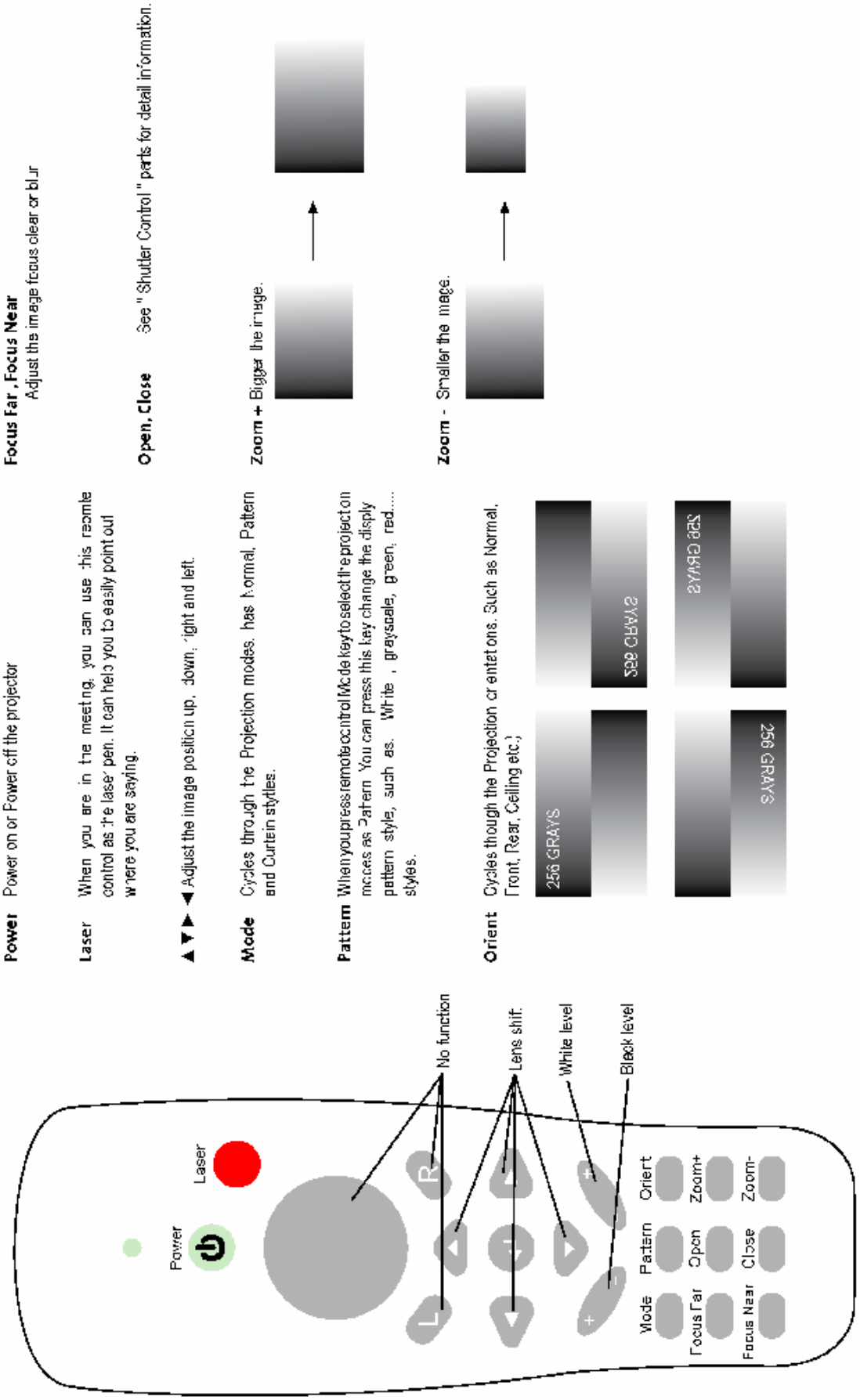

2. *Human* Command Interface

The receive routine masks bit 7 of all characters received and buffers and echoes all printable ASCII characters. **<TAB>**s are converted to **<SPACE>**s. Several other control characters are recognized or transmitted:

Name	Designation	HEX	Operation
Backspace	<BKSP>	08_{16}	Queue pointer decremented; echoed
TAB	<TAB>	09_{16}	Converted to <SPACE>
Line Feed	<LF>	$0A_{16}$	Placed in queue, not echoed, otherwise ignored
Carriage Return	<CR>	$0D_{16}$	Placed in queue, not echoed, command terminator
DC1 – XON	<CTRL-Q>	11_{16}	Flow Control – Re-enable xmtr/rcvr
DC3 – XOFF	<CTRL-S>	13_{16}	Flow Control – Disable xmtr/rcvr
Escape	<ESC>	$1B_{16}$	Not placed in queue. Terminates current operations, flush queue

A number of control characters are set up as *hot keys* to perform the function of the Mode, Pattern, etc. buttons on the PCB and on the rear panel switch via the serial interface. No **<CR>** terminator is required for these commands to execute. See the first entry in Section 3.2 of the commands descriptions.

2.1 The ! Hot Key

Typing or sending a single exclamation point (**!**) immediately after the prompt with no whitespace or control characters – will repeat the last command (the exclamation point is not echoed). If ANY characters are sent between the prompt and the "**!**" – even a **<CR>** - the previous command will be lost and cannot be repeated using the "**!**" option. "**!**" just re-processes the current contents of the command buffer so it will also repeat illegal commands or commands with illegal or missing parameters.

2.2 ASCII Control Characters

In almost all cases sending an **<ESC>** character will terminate current operations and return a command prompt. It can also be used when sending commands manually through a terminal to cancel any characters typed in after the prompt.

Whitespace characters - **<TAB>** and **<SPACE>** - are treated identically. Line feeds - **<LF>** - are queued but are otherwise ignored by the code. A "newline" is always a **<CR><LF>** pair. The prompt is a newline followed by a **>** and a space.

Single **<BKSP>** characters are echoed and back up the queue pointer. A **<BKSP>** sent to the projector is not converted to a "destructive" backspace string - **<BKSP><SPACE><BKSP>** when echoed. Only a single ASCII **<BKSP>** will be echoed. If the terminal program can be configured to send **<BKSP><SPACE><BKSP>** when the Backspace Key is pressed, this option should be selected.

Commands sent to the board in either mode can be terminated with either a single **<CR>** or a **<CR><LF>** pair. The **<LF>** character triggers command parsing and execution. The **<LF>** is ignored. Neither commands nor hex data is case-sensitive.

2.3 ZOOM, FOCUS and Lens Shift Commands

ZOOM, FOCUS and Lens Shift Serial Commands	
The following commands turn on the specified motors. The motors will stay energized until an **<ESC>** character is sent to the projector. The last character of each command is an ASCII digit from 0 to 3 with no intervening whitespace. This determines motor speed with 0 being the slowest and 3 the fastest. All of the motors have clutches or limit switches to prevent damage if they are allowed to run after reaching a mechanical limit.	
Command **0 ≤ n ≤ 3**	Description
Dn	Move image DOWN
Ln	Move image to the LEFT
FFn	Move FOCUS away from Projector – FOCUS FAR
FNn	Move FOCUS toward Projector – FOCUS NEAR
Rn	Move image to the RIGHT
Un	Move image UP
ZIn	ZOOM IN – Projected Image Smaller
ZOn	ZOOM OUT – Projected Image Larger
The following **NUDGE** commands turn on the specified motors for a short period. No **<ESC>** character need be sent. The last character of each command is an ASCII digit from 0 to 3 with no intervening whitespace. This determines period the motor is energized with 0 being the shortest and 3 the longest.	
Command **0 ≤ n ≤ 3**	Description
NDn	Nudge image DOWN
NLn	Nudge image to the LEFT
NFFn	Nudge FOCUS away form Projector – FOCUS FAR
NFNn	Nudge FOCUS toward Projector – FOCUS NEAR
NRn	Nudge image to the RIGHT
Nun	Nudge image UP
NZIn	Nudge ZOOM IN – Nudge Projected Image Smaller
NZOn	Nudge ZOOM OUT – Nudge Projected Image Larger

2.4 User Commands

User Serial Commands	
Command	**Brief Description**
CLOSE	Close Shutter and put Formatters in Curtain Mode
DGAMMA	DGAMMA Dowlnoad
FPOL	TOGGLE the Film Projector Lockout Polarity
Gamma	Select Gamma Table
GETP	Get IR Remote
IR+	Enable IR Remote
IR-	Disable IR Remote **except** POWER Button (default at Power-up)
LH	Display Lamp 1 or 2 Age Data
LAMPON1	Turn On Lamp1*
LAMPON2	Turn On Lamp2*
LAMPOFF1	Turn Off Lamp1*
LAMPOFF2	Turn Off Lamp2*
M+	If V- enable display of non-critical (informational) messages – preceded by %
M-	If V- disable display of non-critical (informational) messages – preceded by %
OFF	Main Power Shutdown
ON	Main Power ON
ONS	Main Power ON and Start Signal Lamp mode*
OND	Main Power ON and Start Dual Lamp mode*
OPEN	Open Shutter and put Formatters in Normal Projection Mode
P ID	Check Projector Serial Number
SIZE	Set Display Size
SETP	Set Lamp Power Mode*
STS	Check Shutter Status
V+	Enable Verbose Mode
V-	Disable Verbose Mode (see **M+** and **M-** above also)
VER	Display Controller Firmware Revision

2.5 Enhanced Color Correction Commands

DEBUG/Maintenance Serial Commands	
Command	**Brief Description**
ECC	Enable/Disable P7 Color Correction and Select Target Data
MDNLD	Download Measured Color Gamut Data for Storage in BLUE Formatter EEPROM
RDMCGD	Display Measured Color Gamut Data
RDTCGD	Display Specified Target Color Gamut Data
TDNLD	Downlaod User-Defined Target Color Gamut Data for Storage in EEPROM

*1 : mark for MH-69 only.

2.6 DEBUG/Maintenance Commands

DEBUG/Maintenance Serial Commands	
Command	**Brief Description**
BAUD	Change immediate and power-up baud clock
FH	Display the FORMATTER Register Help Table
FR	Read Register from ALL Formatters
FRB	Read BLUE Formatter Register
FRG	Read GREEN Formatter Register
FRR	Read RED Formatter Register
FW	Write Register to ALL Formatters
FWB	Write to BLUE Formatter Register
FWG	Write to GREEN Formatter Register
FWR	Write to RED Formatter Register
OCMD	Send Command to Ostram Ballast and Display Response
RST	Reset and Reinitialize Formatters

3. *Human* Command Descriptions

3.1 Lens Shift, ZOOM and FOCUS Commands

The following commands turn on the specified motors. The motor will stay energized until an **<ESC>** character is sent to the projector. The last character of each command is an ASCII digit form 0 to 3 with no intervening whitespace. This determines motor speed with 0 being the slowest and 3 the fastest.

If an **N** prefix is appended to the command mnemonic the command is a **NUDGE**. **NUDGE** commands turn on the specified motors at full speed for a timed period. An **<ESC>** character is not needed to terminate the command. The purpose is to generate small changes in image position, focus or size. The last numeric character of the command determines period the motor is energized with 0 being the shortest and 3 the longest. Due to backlash in the motor/drive assemblies, a single NUDGE – especially a 0 or 1 – may not generate any noticeable change.

All of the motors have clutches or limit switches to prevent damage if they are allowed to run after reaching a mechanical limit.

Un, Dn, Ln, Rn, Nun, NDn, NLn, NRn	**Lens Shift**	**Un, Dn, Ln, Rn, Nun, NDn, NLn, NRn**

UP, DOWN, LEFT and RIGHT. Move the projected image.

Example: U3
NL1

FFn, FNn, NFFn, NFNn	**FOCUS**	**FFn, FNn, NFFn, NFNn**

FOCUS FAR and FOCUS NEAR. FOCUS FAR move the focus away from the projector while FOCUS NEAR moves it toward the projector.

Example: FN0
NFF3

ZIn, ZOn, NZIn, NZOn	**ZOOM**	**ZIn, ZOn, NZIn, NZOn**

ZOOM IN and ZOOM OUT. ZOOM IN makes the projected image smaller while ZOOM OUT makes it larger.

Example: ZI2
NZ01

3.2 User Commands

Control Characters

Several ASCII Control Characters are recognized to control Brightness, Contrast, Display Mode, Patterns and Orientation. These are *hot keys* - i.e., no need to press ENTER.

<CTRL-Z> Brightness - Decrement Lower Level

R/G/B Brightness=1D/1D/1D

<CTRL-X> Brightness - Increment Lower Level

R/G/B Brightness=1C/1/C/1C

<CTRL-W> Contrast - Decrement Upper Level

R/G/B Contrast=03/03/03

<CTRL-E> Contrast - Increment Upper Level

R/G/B Contrast=02/02/02

<CTRL-N> Cycles through the Projection modes

CURTAIN

<CTRL-O> Cycles through the Projection orientations (FRONT, REAR, CEILING, etc.)

REAR-CEILING

<CTRL-P> Cycles through the Patterns (when in PATTERN MODE)

PATTERN = 6

CLOSE, OPEN **SHUTTER Control** **CLOSE, OPEN**

OPEN opens the projector's shutter and puts the formatters in NORMAL projection mode if:

a) The power is ON AND
b) The Film projector interlock is inactive

OPEN cancels a 5 MINUTE POWER DOWN sequence if it has been initiated.

CLOSE closes the projector's shutter and puts the formatters in CURTAIN projection mode if the main power is ON, i.e., the fans are running.

Syntax: open
close

DGAMMA **Download to De-gamma Mailbox** **DGAMMA**

Download de-gamma tables to the formatter's degamma mailbox. DGAMMA takes three parameters. The first is a single letter (**r**, **g**, **b** or **a**) specifying which formatter (or all of them) gets the table. The second is also a single letter (**b** or **w**) specifying whether the table is formatted as bytes or words (16 bits). The last is a decimal parameter which specifies the number of entries (1/2 the total number of bytes). Valid values for this parameter are **256**, **512**, **1024**, or **2048**. After the command is issued, the user will be prompted to send the table as a series of hexadecimal bytes or words. Each entry is 16 bits. If byte mode is selected, send the LSB first. The table can be formatted rather loosely. Any ASCII character less than **'0'** (**3016**) is treated as a terminator. Any number of terminators may be inserted between values so the table can be a single column of values separated by "newlines" or a column of comma separated values or even a string of hex digits without any terminations as long as leading zeros are included with each byte or word.

If all formatters are to be loaded, a prompt will be issued after each successful download and a total of three separate tables will have to be sent.

Syntax: **dgamma {r|g|b|a} {b|w} {256,512,1024,2048}**
> dgamma
Invalid De-Gamma Destination
> dgamma b 256
Data Size must be 'B' or 'W'
> dgamma b b 256
De-Gamma Download to BLUE FormatterXMIT EXACTLY 512 bytes of hexadecimal data

---

FPOL **Film Projector Interlock** **FPOL**

The film projector interlock feature operates in two modes: *lockout* mode and *power control* mode. **FPOL** takes either one or no parameters.

In *lockout* mode the film projector interlock circuitry senses current in the External Interlock connector that is attached to the Feature Film Projector. The lockout, when active, closes the shutter on the *E-Cinema Projector* and puts its formatters in CURTAIN mode and prevents the shutter from being re-opened until the lockout becomes inactive. Depending on the installation, the Feature Film Projector could be active or inactive when a voltage of about 5 volts is applied to the External Interlock connector. **FPOL** sets or toggles the polarity of the sensing circuitry between *active-when-energized* [**FPOL 0**] and *active-when-not-energized* [**FPOL 1**]. The unit is shipped with the polarity set to 0 [*active-when-energized*] so that if the interlock is not connected, the projector will not be locked out. There is a way to override the lockout by depressing the right side of the Power/Shutter rocker switch for more than 5 seconds.

In *power control* mode [**FPOL 2**], the polarity is nor selectable. When the External Interlock connector is energized – a voltage of about 5 volts is applied – the projector will turn on and will remain on until the voltage is removed. The shutter will automatically open at completion of the power-up sequence whether or not there is any active video.

If the projector is in power *control* mode, to take it out of this mode attach a terminal to the serial port and type:

> **fpol 0** [set lockout *active-when-energized*] or
> **fpol 1** [set lockout *active-when-not-energized*]

Typing **fpol** without a parameter will have no effect.

If the projector is in *lockout* mode:

> **fpol** [toggle lockout polarity: **0** Þ **1**, **1** Þ **0**] or
> **fpol 0** [set lockout *active-when-energized*] or
> **fpol 1** [set lockout *active-when-not-energized*] or
> **fpol 2** [set *power control* mode]

The polarity parameter is stored in EEPROM and once established it is not necessary to set it again.

NOTE: When the projector is in power control *mode, the External Interlock has absolute control over the projector power. It locks out the other power on/off methods - serial port commands (*on *and* off*), the rear panel rocker switch and the IR remote. To control the power or enable the IR remote during setup or testing, a terminal must be connected to the serial interface and serial commands (*fpol, ir+, etc.*) must be issued. The projector can be returned to* power control *mode with* fpol 2*.*

Syntax: **fpol [0 | 1 | 2]**

```
> fpol
FP Polarity = 1
>
Film Projector ON

IR= 08
> fpol
FP Polarity = 0
>
Film Projector OFF
> fpol 0
FP Polarity = 0
> fpol 1
FP Polarity = 1
>
Film Projector ON
> fpol 2
FP Polarity = 2
```

GAMMA **GAMMA Table Select** **GAMMA**

Select GAMMA Table. It will store to EEPROM, and when system boots up will reload the gamma setting.

Syntax: **GAMMA {Table Num} 0 < num < n**

```
>gamma 2
Set Gamma index = 2
```

Index	Name	Owner
0	Graphic Enhanced	TI
1	NTSC	TI
2	NTSC Enhanced	TI
3	PAL SECAM	TI
4	PAL SECAM Enhanced	TI
5	EE Ambient Light Compensation #1 - for low light level	EE
6	EE Ambient Light Compensation #2	EE
7	EE Ambient Light Compensation #3	EE
8	EE Ambient Light Compensation #4	EE
9	EE Ambient Light Compensation #5 - for medium light levels	EE
10	EE Ambient Light Compensation #6 - for medium light levels	EE
11	EE Ambient Light Compensation #7	EE
12	EE Ambient Light Compensation #8	EE
13	EE Ambient Light Compensation #9	EE
14	EE Ambient Light Compensation #10 - for high light levels	EE

SETP **LAMP POWER MODE** **SETP**
GETP **GETP**

OSRAM Lamp support change lamp Output power. The output wattage of the lampdriver can be adjusted by command. SETP is used to setup the lamp output wattage. For now, user can adjust 2 mode, 250W or 300W. And if system is working in dual lamp mode, then it is set for dual lamp. It can't separately set lamp setting. GETP is used to read lamp output wattage. It can separately read the lamp setting.

Syntax: **SETP {Power Mode} 0:250W ; 1:300W**
GETP {Lamp Num} 1:Lamp1 ; 2: Lamp2

> setp 0
Set Lamp1 250W!
Set Lamp2 250W!

> getp 1
Lamp1 = 250W

IR+, IR- **IR Remote Enable/Disable** **IR+, IR-**

Enable (IR+) or disable (IR-) the infrared remote control interface. The IR remote POWER button is always enabled. If the projector is powered up using the IR remote, all other IR buttons are also enabled until an IR- command is issued or POWER OFF.

Syntax: **ir+**
ir-

> ir+
IR Enable !!
> ir-
IR Disable !!

LAMPON1
LAMPON2
LAMPOFF1
LAMPOFF2

LAMP On/Off

LAMPON1
LAMPON2
LAMPOFF1
LAMPOFF2

Turn ON/OFF the lamp, when system is powered on. LAMPON1 is turn lamp 1 on; LAMPOFF1 is turn lamp1 off. LAMPON2 is turn lamp 2 on; LAMPOFF2 is turn lamp2 off. In dual-lamp mode, user turn off one lamp, the system will switch to single lamp mode, and store the mode to EEPROM.

Syntax: **LAMPON1**
LAMPOFF1
LAMPON2
LAMPOFF2

> lampoff1
LAMP1 OFF !
> lampoff2
LAMP2 OFF !
> lampon1
LAMP1 ON !
> lampon2
LAMP2 ON !

M+, M-

Informational Message Reporting Control

M+, M-

Syntax: **m+**
m-

> m+
Monitor Info. On !!
> m-
Monitor Info. Off !!

ON, OFF, ONS, OND

POWER Control

ON, OFF, ONS, OND

Power sequencing commands. See section 1.3 for more details.

ON and OFF Power Sequencing Commands		
Command	**Current State**	**Resulting State**
ON ONS OND	STANDBY [RED]	POWER ON
	POWER ON [GREEN]	NO CHANGE
	5 MINUTE POWER DOWN [YELLOW]	POWER ON - Power Down Cancelled
	60 SECOND POWER OFF [YELLOW]	POWER ON - Lamp re-strike after 90 second lamp cool-down
OFF	STANDBY [RED]	NO CHANGE
	POWER ON [GREEN]	5 MINUTE POWER DOWN - Shutter closed
	5 MINUTE POWER DOWN [YELLOW]	60 SECOND POWER OFF - Lamp OFF, Shutter closed
	60 SECOND POWER OFF [YELLOW]	NO CHANGE

System boot up will reload the settings, as below:

a. Gamma setting
b. P7 setting
c. MCGD & TCGD
d. Lamp mode
e. Brightness & Contrast
f. Image Orientation

Syntax: ON → Main Power On and Turn On lamp which last power off select lamp mode. If lamp mode is Single lamp mode, then turn on the lamp which lifetime is small, then the other one.
OFF → Main Power Off.
ONS → Main Power On and Turn On Single lamp mode which lifetime is small, then the other one.
OND → Main Power On and Turn On Dual lamp.

```
> on
Power On - Dual_Lamp

Lamp1 S/N = feng1
Lamp1 Time = 9:21
Lamp1 Strikes = 45
Lamp1 is Off !
Lamp2 S/N = feng2
Lamp2 Time = 9:43
Lamp2 Strikes = 74
Lamp2 is Off !
>
Powering Up
> ond
Power On -Dual_Lamp
Lamp1 S/N = feng1
Lamp1 Time = 3:15
Lamp1 Strikes = 35
Lamp1 is Off !
Lamp2 S/N = feng2
Lamp2 Time = 3:37
Lamp2 Strikes = 64
Lamp2 is Off !
>
Powering Up
> ons
Power On -Signal_Lamp Lamp 1
Lamp1 S/N = feng1
Lamp1 Time = 9:23
Lamp1 Strikes = 46
Lamp1 is Off !
Lamp2 S/N = feng2
Lamp2 Time = 9:45
Lamp2 Strikes = 75
Lamp2 is Off !
>
Powering Up
```

P_ID **Show Projector ID** **P_ID**

Read Projector ID.

Syntax: **p_id**

> p_id
Projector Serial Number=123456

SIZE **Display Size** **SIZE**

Native image size on the HD2+ engine is 1280 x 720. Parameters are entered in decimal.

Syntax: **size {HSIZE} {VSIZE}** **- 640 ≤ HSIZE ≤ 1280, 480 ≤ VSIZE ≤ 720**

> size 1280 720
Size: 1280X720

STS **Display Shutter Status** **STS**

Display Shutter Status.

Syntax: **STS**

> STS
Shutter is On !

V+, V- **VERBOSE Mode Control** **V+, V-**

Enable (**V+**) or disable (**V-**) VERBOSE mode on the serial interface. When VERBOSE is enabled all messages – informational, error and status, etc. – are sent as human readable text. When disabled those messages are sent as a 6 character ASCII group. There are two types of messages: critical and non-critical. Non-critical messages can be enabled or disabled using the M+ and M- commands. The first character of non-critical messages is a percent sign (**%**). Critical messages are headed by an exclamation point (**!**). The next two characters form a unique 8-bit hexadecimal code identifying the message (see below). The last three characters are a dollar sign (**$**) followed by a **<CR>** and **<LF>**.

DGAMMA *and most of the DEBUG/Maintenance commands output verbose messages regardless of whether VERBOSE is enabled or disabled.*

Non-Verbose Message Codes	
Non-critical (Informational) Messages [M+ and V-]	
%01$	LAMP Door Closed and Lamp TEMP OK
%02$	FANS OK
%03$	Film Projector ON – During Power-up
%04$	Film Projector OFF – During Power-up
%05$	Video Signal Detected – During Power-up
%06$	Striking Lamp – During Power-up
%07$	Restrike – Ballast RESET
%08$	Restrike – Lamp Restrike
%09$	Restrike – Restrike Fail
%0A$	Ballast COMM Failure – typically non-critical unless it least to !88$
Critical Messages / Shutdown Messages [V-]	
!80$	Lamp Door Open or Lamp Overtemp – if after Power-up ► Shutdown
!81$	FAN Problem – if after Power-up ► Shutdown
!82$	NO Video – during or after Power-up
!83$	Video Signal Detected - Video Restored
!84$	Lamp Lit - During Power-up
!85$	Formatter COMM Disabled - Check SW500 – Power-up sequence halted
!86$	Restrike - Lamp Lit - After Power-up - 30 second Warm up before Shutter OPEN
!87$	Restrike Count Exceeded ► Shutdown
!88$	Ballast not Responding - After Power-up ► try Restrike
!89$	Ballast OVERTEMP ► Shutdown
!8A$	Lamp Extinguished - After Power-up ► try Restrike
!8B$	Resetting Formatters – usually non-critical
!8C$	LAMP SYNC Signal Inactive – usually non-critical
!8D$	LAMP SYNC Detected – usually non-critical
!8E$	Film Projector ON - After Power-up – Shutter CLOSED
!8F$	Film Projector OFF - After Power-up
!90$	RED FORMATTER Status Read Error – usually non-critical
!91$	GREEN FORMATTER Status Read Error – usually non-critical
!92$	BLUE FORMATTER Status Read Error – usually non-critical
!A0$	Power-up Sequence Complete – Ready for shutter OPEN
!E0$	Invalid Parameter in Command line
!E1$	Missing Parameter(s) in Command line
!E2$	Unknown Command
!F0$	Lamp Time Read from EEPROM – Lamp Hour EEPROM Read Error
!F1$	Strike Count Read from EEPROM – Lamp Hour EEPROM Read Error
!F2$	Power Off – MAIN Power OFF – System in Standby Mode
!F3$	5 Minute Power Down Can celled by OPEN or ON Command
!F4$	5 Minute Power Down Initiated – Lamp OFF and 60 second cool down in 5 minutes
!F5$	Powering Up – Main Power ON - Initiating Power-up Sequence
!F6$	Powering Down – Lamp OFF – 60 second cool down

Syntax: v+
v-

VER **VERSION** **VER**

Display Controller Firmware Revision:

ver

* 720p MHF-69 Monitor – Rev. D03J
* 17 Nov 2006 *Syntax: ver

3.3 Enhanced Color Correction (P7) Commands

ECC **Select P7 TARGET DATA** **ECC**

Select the Target Color Data. This command takes a parameter - the target index - between **0** and **13**. The following table lists the GRBW CIE color coordinates for the selected ECC index. Note that indicates 1 through 9 do not specify the Magenta, Cyan or Yellow CIE values. Indices 10 through 13 specify user-definable tables which may include the CMY coordinates as well as GAIN values for each of the colors and WHITE. See TI document - *Product Specification for DDP1000, DDP1010, DDP1011 Based Modular Formatter Component Set* [Dwg #2503986, Rev. J or later] for details.

<table>
<tr><th colspan="10">Target Color Gamut Data</th></tr>
<tr><th rowspan="2">Index</th><th rowspan="2">Description</th><th colspan="2">GREEN</th><th colspan="2">RED</th><th colspan="2">BLUE</th><th colspan="2">WHITE</th></tr>
<tr><th>X</th><th>Y</th><th>X</th><th>Y</th><th>X</th><th>Y</th><th>X</th><th>Y</th></tr>
<tr><td>0</td><td>OFF</td><td colspan="8">ECC OFF</td></tr>
<tr><td>1</td><td>ANSI - 3200°K</td><td rowspan="4">.210</td><td rowspan="4">.710</td><td rowspan="4">.670</td><td rowspan="4">.330</td><td rowspan="4">.140</td><td rowspan="4">.080</td><td>.423</td><td>.399</td></tr>
<tr><td>2</td><td>ANSI - 5400°K</td><td>.335</td><td>.349</td></tr>
<tr><td>3</td><td>ANSI - 6500°K</td><td>.313</td><td>.329</td></tr>
<tr><td>4</td><td>ANSI - 9300°K</td><td>.283</td><td>.297</td></tr>
<tr><td>5</td><td>EE-REC709</td><td colspan="8">N/A</td></tr>
<tr><td>6</td><td>EE-XYZ</td><td colspan="8">N/A</td></tr>
<tr><td>7</td><td>User 2</td><td colspan="8" rowspan="2">User Selectable GREEN, RED, BLUE, MAGENTA, CYAN, YELLOW and WHITE CIE Indices stored in EEPROM (See TDNLD)</td></tr>
<tr><td>8</td><td>User 3</td></tr>
<tr><td>9</td><td>Native</td><td>.316</td><td>.651</td><td>.655</td><td>.341</td><td>.147</td><td>.044</td><td>.296</td><td>.337</td></tr>
</table>

Syntax: ecc {target index}

> ecc2
EC Set Index 2
ECC Enable
Freeze Frame On
Freeze Frame Off

MDNLD **Download Measured Color Gamut Data** **MDNLD**

Download Measured Color data for storage on the BLUE Formatter's EEPROM. When the command is entered, the operator is prompted to send **16** bytes of data: the X and Y CIE coordinates of the un-enhanced GREEN, RED, BLUE and WHITE colors. Each coordinate is 16 bits - 2 bytes - sent least significant byte first in hexadecimal. For each coordinate, first multiply by **65536** and convert to hexadecimal. Output two hexadecimal bytes, LS byte first, for each of the 8 coordinates in order: Gx, Gy, Rx, Ry, Bx, By, Wx, Wy , Bx By ,WY and BY. The values can be manually typed from the terminal or stored in a file and sent to the controller board using the terminal's "Send Text File" utility. Characters typed of sent will NOT be echoed. The 16 bytes sent may be **<SPACE>, <TAB>**, **<CR>** or **<LF>** separated.

After the data is downloaded, the coordinates will be displayed in decimal format for confirmation.

Syntax: **mdnld**
> mdnld
Enter Gx,Gy,Rx,Ry,Bx,By,Wx,Wy,Bx,By,WB,BB(x100) 12 datas:
.323,.649,.664,.334,.146,.041,.291,.307,.310,.000,3000,123
GREEN = .323,.649
RED = .664,.334
BLUE = .146,.041
WHITE = .291,.307
BLACK = .310,.037
CONTRAST= 2439

RDMCGD **Display Measured Color Gamut Data in Use** **RDMCGD**

Display the Measured Color Gamut Data that is currently in use. If the calibrated data in the EEPROM on the BLUE Formatter has not been loaded or has been corrupted, a default table is loaded.

Syntax: **rdmcgd**
> rdmcgd
GREEN = .340,.650
RED = .640,.350
BLUE = .140,.033
WHITE = .290,.330

RDTCGD **Display Target Color Gamut Data** **RDTCGD**

Display the Target Color Gamut Data for the specified index. This command takes a parameter – the target index – between **1** and **9**.

Syntax: **rdtcgd {1 ≤ target index ≤ 9}**

For indices **1** through **4** (in this example index **4**) the following will be output to the terminal:
> rdtcgd 4
GREEN = .210,.710
RED = .670,.330
BLUE = .140,.080
WHITE = .423,.399
TOLBOX = .010

For indices **5** through **8** (in this example index **8**) the full contents of the used-definable table will be displayed. The third value for each color is the GAIN. See TI document – *Product Specification for DDP1000, DDP1010, DDP1011 Based Modular Formatter Component Set* [Dwg #2503986, Rev. J or later] for details on the tolerance box specification and the Copyright notice.

> rdtcgd 8
GREEN = .337,.642,.000
RED = .642,.353,.000
BLUE = .140,.034,.000
MAGENTA = .000,.000,.000
CYAN = .000,.000,.000
YELLOW = .000,.000,.000
WHITE = .287,.326,.000
TOLBOX0 = .277,.336
TOLBOX1 = .297,.336
TOLBOX2 = .297,.316
TOLBOX3 = .277,.316
Use TOL BOX
Notice: 'P7 TCGD Data - 6300K - Copyright (c) 2006 Delta Products Corp.'

TDNLD **Download User-Defined Target Color Gamut Data** **TDNLD**

Download a User-definer Target Color Gamut Data Set for storage in controller board's EEPROM. The command takes a decimal parameter – the target index between **10** and **13** corresponding to the index used in the **ECC** command. When the command is entered, the operator is prompted to send **140** bytes of data. A description of the data packet can be found in the Texas Instruments document – *Product Specification for DDP1000, DDP1010, DDP1011 Based Modular Formatter Component Set* [Dwg #2503986, Rev. J or later] in the **Target Color Gamut Data** command description. Note that the first byte listed here is **8816**. This is used when actually communicating with the Formatters and should not be sent with the **TDNLD** command. Byte **2** – the LS Byte of the GREEN CIE X coordinate is the first value sent. The command description only defines bytes **2** through **140** – a total of **139**. Add an extra **0** byte to the end so that full **140** bytes are sent. Unspecified parameters such as GAIN values, CMY coordinates or the Copyright Notice should be sent as zeros.

The values can be manually typed from the terminal or stored in a file and sent to the controller board using the terminal's "Send Text File" utility. The **140** bytes sent may be **<SPACE>, <TAB>**, **<CR>** or **<LF>** separated.
Characters typed of sent will NOT be echoed.

TDNLD Data Format							
Field Contents		BYTES	Positions	Field Contents		BYTES	Positions
GREEN	X	2	Bytes 1-2	RESERVED – 00H		6	Bytes 43-48
	Y	2	Bytes 3-4	W TOL BOX 1	X	2	Bytes 49-50
	GAIN	2	Bytes 5-6		Y	2	Bytes 51-52
RED	X	2	Bytes 7-8	W TOL BOX 2	X	2	Bytes 53-54
	Y	2	Bytes 9-10		Y	2	Bytes 55-56
	GAIN	2	Bytes 11-12	W TOL BOX 3	X	2	Bytes 57-58
BLUE	X	2	Bytes 13-14		Y	2	Bytes 59-60
	Y	2	Bytes 15-16	W TOL BOX 4	X	2	Bytes 61-62
	GAIN	2	Bytes 17-18		Y	2	Bytes 63-64
MAGENTA	X	2	Bytes 19-20	RESERVED – 00H		6	Bytes 65-70
	Y	2	Bytes 21-22	TOL BOX MODE		1	Byte 71
	GAIN	2	Bytes 23-24	RESERVED – 00H		1	Byte 72
CYAN	X	2	Bytes 25-26	Copyright Notice – ASCII – 0 PADDED		64	Bytes 73-136
	Y	2	Bytes 27-28				
	GAIN	2	Bytes 29-30	RESERVED – 00H		4	Bytes 137-140
YELLOW	X	2	Bytes 31-32				
	Y	2	Bytes 33-34				
	GAIN	2	Bytes 35-36				
WHITE	X	2	Bytes 37-38				
	Y	2	Bytes 39-40				
	GAIN	2	Bytes 41-42				

Syntax: **tdnld {5 ≤ target index ≤ 8}**

```
> tdnld 5
XMIT EXACTLY 140 bytes of hexadecimal data
Download TCGD 5
down !!
GREEN = .265,.690,.513
RED = .665,.312,.150
BLUE = .140,.070,.078
MAGENTA = .373,.178,.270
CYAN = .176,.337,.659
YELLOW = .457,.522,.916
WHITE = .314,.351,.:00
TOLBOX0 = .309,.355
TOLBOX1 = .318,.362
TOLBOX2 = .319,.347
TOLBOX3 = .311,.341
Use TOL BOX
Notice: 'c)Copyright 2002 Texas Instruments Inc.'
>
>
>
```

3.4 DEBUG/Maintenance Commands

BAUD **Switch BAUD Clock** **BAUD**

Immediate BAUD clock change. Only two rates are supported - 9600 and 19200. The clock rate on the terminal programmed will have to be changed to continue. This command also sets the BAUD clock that will be set at start-up.

Syntax: **baud {9600 | 19200}**

FH **FORMATTER Register Help** **FH**

This command prints the register numbers, R/W status and name of the accessible DDP1011 formatter registers:

Syntax: **fh**

```
> fh
00 RW Brightness
01 RW Contrast
02 RW Projection Mode
03 RW Image Orientation
04 RW Mirror Park
05 RW Image Freeze
06 RW Vertical Frequency
07 RW Vertical Frequency Offset
08 RW Color Temperature Gain
09 RW Input Image Size
0A RW Image Position
0B RW Test Pattern Select
0C RW Formatter Input Data Type
0F RW 3D Sequence Set Select
10 RW Pulsed Lamp Data
11 RW Pulsed Lamp Ballast Sel
31 RW Color Space Matrix Select
32 WO Color Space Matrix Dnld
```

33 RO Color Space Matrix Read
34 RW De-Gamma Table Select
35 RW De-Gamma Dnld Dest
36 WO De-Gamma Dnld Mailbox
40 RO System Configuration
41 RW DMD Bin Voltage Method Sel
42 RW DMD Bin Voltage Level Sel
43 RW Convergence
44 RW Formatter Color
45 RW Processing Path Select
46 RW Sequence Set Select
47 RO Sequence Sets Available
48 RO Sequence Set Data
49 RW Select LAMPSYNC Output
4A RW Flash MEM Access Time Sel
4C RW Command Sync ENABLE
50 RO System Status
51 WO System RESET
53 RO VERSION
55 RO Special Feature STATUS
60 WO Target Color Gamut Data
61 WO Measured Color Gamut Data
63 RW Enhanced Color Corr. Disable

FR, FRR, FRG, FRB — **FORMATTER Register Read** — **FR, FRR, FRG, FRB**

Read formatter registers:

FR	- Read all formatters
FRR	- Read RED formatter
FRG	- Read GREEN formatter
FRB	- Read BLUE formatter

The required parameter is the hexadecimal register number. The output is formatted as a stream of 8-bit or 16-bit hexadecimal values as specified in the TI document - *Product Specification for DDP1000, DDP1010, DDP1011 Based Modular Formatter Component Set* [Dwg #2503986, Rev. J]. See **FW** below.

Syntax: **fr[r|g|b] {register number}**
> fr 0
RED Formatter Brightness Register: 1500 1500 1500
GREEN Formatter Brightness Register: 1500 1500 1500
BLUE Formatter Brightness Register: 1500 1500 1500
> frr 0
RED Formatter Brightness Register: 1500 1500 1500
> frg 0
GREEN Formatter Brightness Register: 1500 1500 1500
> frb 0
BLUE Formatter Brightness Register: 1500 1500 1500

FW, FWR
FWG, FWB

FORMATTER Register Write

FW, FWR,
FWG, FWB

Write formatter registers:

FW - Write all formatters
FWR - Write RED formatter
FWG - Write GREEN formatter
FWB - Write BLUE formatter

The first parameter is the hexadecimal register number. One or more additional parameters are required – the data to be written. See the TI document – *Product Specification for DDP1000, DDP1010, DDP1011 Based Modular Formatter Component Set* [Dwg #2503986, Rev. J] – for details. The first byte in the spec – *Number of bytes being sent* – and the *Protocol Pad* bytes are not entered in the parameter list. As an example, the Brightness Register (**00_{16}**) lists the following data:

Byte	Description
1	Number of data bytes being sent (06h)
2	Green (lsb)
3	Green (msb)
4	Red (lsb)
5	Red (msb)
6	Blue (lsb)
7	Blue (msb)
8	Protocol Pad

Thus three words are required. To write the following data to the BLUE formatter BRIGHTNESS register:

Green = **1484_{16}**, Red = **$18E0_{16}$** and Blue = **$0AF9_{16}$**

type: **fwb 0 1484 18e0 af9**

To write to all Test Pattern Select register (**$0B_{16}$**):

Byte	Description
1	Number of data bytes being sent (03h)
2	Test Pattern Number
3	Vertical Frequency Value (lsb)
4	Vertical Frequency Value (msb)
5	Protocol Pad
6	Protocol Pad
7	Protocol Pad
8	Protocol Pad

with Test Pattern select = **06_{16}** and Vertical Frequency Value = **1771_{16}**

type: **fw b 6 1771**

Syntax: **fw[r|g|b] {register number} {data1 [data2]…[datan]}**

To write the Brightness or Contrast in R/G/B channel,please follow the below command.
R/G/B Brightness:

Fw {Brightness} {Green-Brightness}{Red-Brightness}{Blue-Brightness}

>fw 0 7000 8000 9000
RED Formatter Brightness Register : 7000 8000 9000
GREEN Formatter Brightness Register : 7000 8000 9000
BLUE Formatter Brightness Register : 7000 8000 9000

R/G/B Contrast:

Fw {Contrast} {Green-Contrast}{Red-Contrast}{Blue-Contrast}

```
>fw 0 8000 9000 7000
RED Formatter Contrast Register : 7000 8000 9000
GREEN Formatter Contrast Register : 7000 8000 9000
BLUE Formatter Contrast Register : 7000 8000 9000
```

OCMD **Ballast Communications** **OCMD**

This command is used for sending commands to the Osram Lamp ballast. The first parameter determines which of the two ballast ports is addressed. The second is the ballast register address (hexadecimal - e.g., STATUS = 22_{16}). See the Osram documentation for register details. If the command requires data to sent those bytes are appended to the command (hexadecimal and space delimited). If the command causes the ballast to return data - no just echo the command - the response will be output in hexadecimal bytes. The ballast status command is special in that the status bits are decoded (see below). Examples:

Syntax: **ocmd { 1 | 2 } {ballast command} [$data_1$] [$data_2$] … [$data_n$]**

```
> ocmd 2 22
Command response = E0
LAMP BALLAST 2 STATUS BYTE:
RUN UP IN PROGRESS
MAX IGN TIME EXCEEDED
LAMP BURNING
> ocmd 2 3e
Command has no response.
> ocmd 2 60 96
Command response = 9D
> ocmd 2 60 98
Command response = D9
```

RST **Reset and Re-initialize the Formatters** **RST**

Perform hardware RESET of the 3 formatters and re-initialize them:

Syntax: **rst**

```
> rst
Reset Formatter Board Now !!
MCGD OK to Read
ECC Index 2
ECC Enable
Freeze Frame On
Freeze Frame Off
Reload Gamma Index = 1
```

4. Infrared Remote Control Interface

An IR interface is included for Lens Positioning, Zoom and Focusing adjustments. The IR remote control that is handled by the firmware is Model T320L by Umate Corp., Taipai, Taiwan. It emits the following *RECS80* codes:

Button	Code Assuming LSB First	Operation/Action
POWER	$8C73817E_{16}$	**Toggle Main Power**
Mouse Knob	N/A	Not decoded
L Mouse Button	N/A	Not decoded
R Mouse Button	N/A	Not decoded
UP Arrow	$8C73837C_{16}$	**Pan UP**
DOWN Arrow	$8C7343BC_{16}$	**Pan DOWN**
RIGHT Arrow	$8C7323DC_{16}$	**Pan RIGHT**
LEFT Arrow	$8C73C33C_{16}$	**Pan LEFT**
ENTER	$8C73A35C_{16}$	Reserved
Keystone UP	$8C73A15E_{16}$	**Brightness/Contrast – Increment Lower Level**
Keystone DOWN	$8C7321DE_{16}$	**Brightness/Contrast – Decrement Lower Level**
Volume UP	$8C7331CE_{16}$	**Brightness/Contrast – Increment Upper Level**
Volume DOWN	$8C73F10E_{16}$	**Brightness/Contrast – Decrement Upper Level**
MENU	$8C73E11E_{16}$	**Change Mode – same as <CTRL-N>**
STATUS	$8C7311EE_{16}$	**Change Pattern – same as <CTRL-P>**
MUTE	$8C73916E_{16}$	**Change Orientation – same as <CTRL-O>**
AUTO	$8C73619E_{16}$	**Focus FAR**
SOURCE	$8C73C13E_{16}$	**Focus NEAR**
ZOOM+	$8C7385AE_{16}$	**ZOOM OUT – Image larger**
ZOOM-	$8C73B14E_{16}$	**ZOOM IN – Image smaller**
BLANK	$8C738D2E_{16}$	**Open Shutter – same as OPEN**
FREEZE	$8C73718E_{16}$	**Close Shutter – same as CLOSE**

Control buttons other than those listed in **BOLD** above generate no activity.

4.1 Pan, Zoom and Focus Speed and Nudge Functions

The Pan, Zoom and Focus buttons can be used to manually control the projected image. All of the motors may be driven at one of four speeds to make small incremental adjustments. In addition a **nudge** function is implemented. When any of the control keys are pressed and released, the associated motors will be turned on for a short period of time, causing a small incremental change in the image. In the following descriptions this nomenclature is used:

P = a quick button press and release – press and release time each less that about 0.25 seconds
H = the button is held down
PP = two quick button presses and releases – down times and intervening up times each less that about 0.25 seconds, etc.
..PH = One or more quick button presses and releases followed by a hold

The nudge function generates small changes in lens position,etc., by applying power to the associated motor for one of four time intervals: 12.5, 25, 50 or 100 milliseconds. Nudges are generated by a number of quick button depressions and releases. Nudge increments are controlled by the number of quick button presses – up to four. More than four are treated the same as four.

P – smallest change – 12.5 msec
PP – 25 msec
PPP – 50 msec
PPPP – largest change – 100 msec
PP..PP – largest change – 100 msec

Continuous changes are generated by a number of quick presses followed by a hold. Motor speeds are determined by the number of quick button presses – up to three – before holding the button down.

H	- very slow
PH	- slow
PPH	- medium
PPPH	- fast
PP..PH	- fast

Release the button to stop the motor. Note that there is about a 0.25 to 0.35 second delay between button release and motor off.