myprojectorlamps.com

The most trusted, dependable name in projector lamp sales.

http://www.myprojectorlamps.com

http://www.myprojectorlamps.ca

http://www.myprojectorlamps.eu

The following projector manual has not been modified or altered in any way.

NE 151 Highway 300, Suite A
PO Box 2609
Belfair, WA 98528
360.464.2119
www.boxlight.com

USER MANUAL

Pro5000SL

Contents

About this manual 1
Contents.....2
Projector features.....3
Preparations.....3
Contents of package.....3
Part names.....4
Projector.....4
Control panel 5
Remote control 5
Setting up.....6
Arrangement.....6
Connecting your devices.....8
Connecting power supply.....10
Using the security anchor.....10
Using the hiding-style Handle.....11

Remote control.....12
Putting batteries.....12
About the remote control signal.....13
Using as a simple PC mouse & keyboard.....13

Power on/off.....14
Turning on the power.....14
Turning off the power.....14

Operating.....15
Adjusting the volume.....15
Adjusting the mute.....15
Selecting an input signal.....15
Searching an input signal.....16
Selecting an aspect ratio.....16
Adjusting the image position.....17
Adjusting the zoom and focus.....17
Correcting the keystone distortions.....18
Stilling the Screen.....19
Temporarily blanking the screen.....19
Using the menu function.....20

MENU
Picture menu(PC mode).....21
Picture menu(Video mode).....22
Audio menu.....23
Setting menu(PC mode).....24
Setting menu(Video mode).....25
Advanced menu.....26
Logo Setting.....26-A
Logo Capture.....26-B
Presentation menu.....27
Security menu.....28
Auto filter alert.....30
PIN Key in operation.....31

Maintenance.....32
Lamp.....32
Lamp Warning.....33
Air filter.....34
Other care.....35

Troubleshooting.....36
Regarding the indicator lamps.....36
Mistaken for machine defects.....37
List of supported Monitor Display.....39

Appendix
Ceiling Mounted Installation Guide.....40
PIN code number memo.....41

Projector features

1. Design with 3LCD optical system, provide you：Bright image, natural color, smooth video playback and gentle for your eyes.
2. Design with high efficiency dust air filter and Auto Filter Alert. (See P30)
3. Easy to maintenance design function.(See P32~35)
4. Security PIN Lock function. (See P29)
5. Progressive scans accommodating for High-definition 1080i form.
6. Auto V keystone function, +/- 30 degrees.
7. Auto brightness control.
8. Auto ceiling function.
9. Support DVI ,YPbPr ,Composite Video and S-Video signal. (See P8)
10. Hiding-Style Handle to carry the projector easily. (See P11)

Preparations

Contents of package(Before Use)

Your projector should come with the items shown there. Contact immediately your dealer if anything is missing.

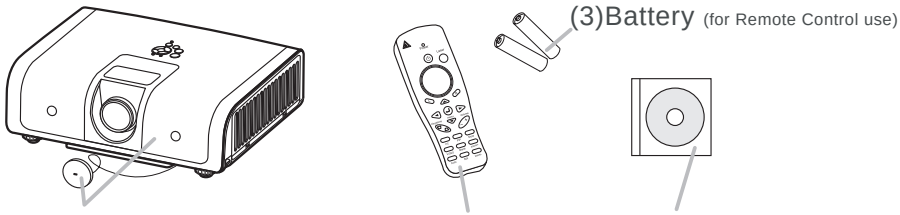

(1)Projector and Lens Cap (2)Remote control (4)User's Manual (CD)

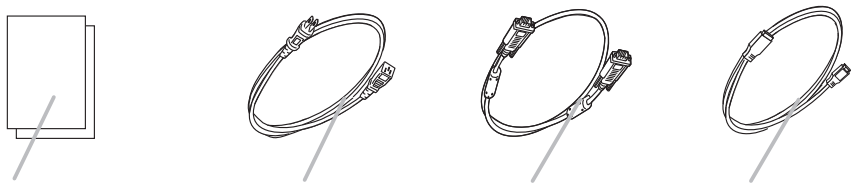

(5)Quick Start Guide (6)Power Cable (7)VGA Cable (7)USB Cable

NOTE ► Keep the original packing materials, for future reshipment.
Be sure to use the original packing materials when moving the projector.

Part names

Projector

(1) Lamp Cover
The lamp is inside.
(2) Focus ring(SEE P17)
(3) Zoom ring(SEE P17)
(4) Control panel(SEE P5)
(5) Speaker
(6) Adjustable knobs (x 2)
(7) Adjustable feet (x 2)
(8) Lens Cap
(9) Lens cover
(10) Intake vents
(11) Filter cover
The air filter is inside.
(12) Front IR receiver
(13) Security anchor(SEE P10)
(14) AC inlet(SEE P10)
(15) S-VIDEO port(SEE P16)
(16) AUDIO L/R port(SEE P8)
(17) VIDEO port(SEE P8)
(18) COMPUTER IN1 port(SEE P8)
(19) COMPUTER IN2 / DVI port(SEE P8)
(20) USB port(SEE P13)
(21) AUDIO 1 IN port(SEE P8)
(22) AUDIO 2 IN port(SEE P8)
(23) AUDIO OUT port (SEE P8)
(24) MONITOR OUT port
(25) YPbPr port (SEE P16)
&(26) L-AUDIO IN-R port(SEE P8)
(28) RS-232C port(SEE P8)
(29) LAN port (Optional)(SEE P8)

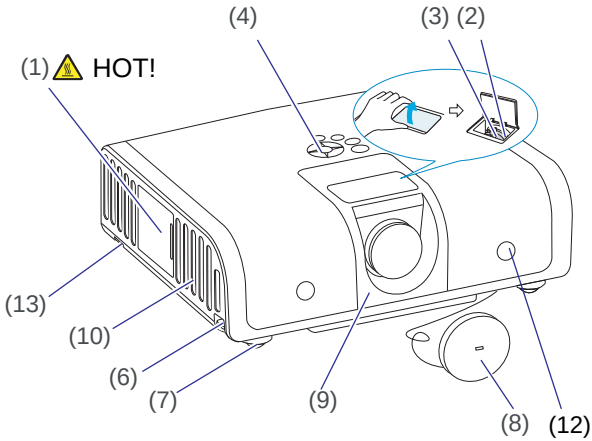

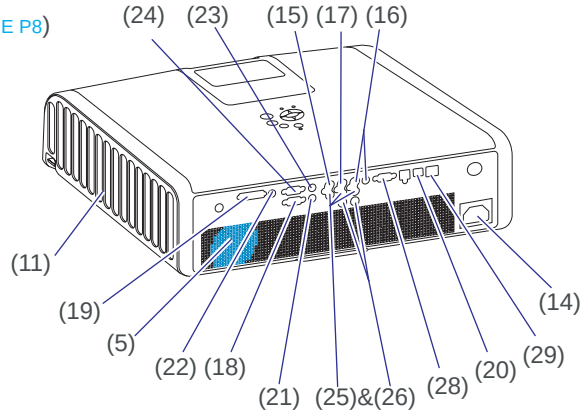

WARNING **HOT! :**
Do not touch the lamp cover and the outlet vents during use or just after use, since it is too hot.
Do not look into the lens or vents while the lamp is on, since the strong light is not good for your eyes.

CAUTION
Maintain normal ventilation to prevent the projector from heating up. Do not cover, block or plug up the vents. Do not place anything that can stick or be sucked to the vents, around the intake vents. Change the air filter periodically.
Do not use the security anchor to prevent the projector from falling down, since it is not designed for it.

Part names

Control panel

(1) ON/STANDBY button(SEE P14)
(2) AUTO button(SEE P15)
(3) INPUT button(SEE P15)
(4) BLANK button
(5) KEYSTONE button
(6) MENU button(SEE P16)
(7) MENU-Left/Right
MENU-Up/Down
(8) POWER indicator(SEE P10,P14)
(9) LAMP indicator (SEE P14)

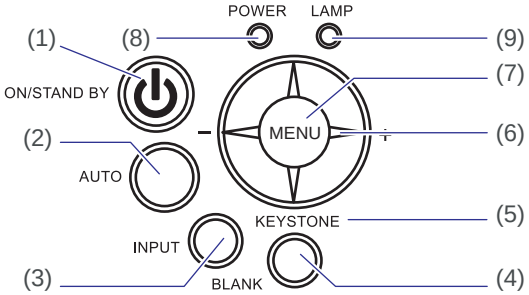

Remote control

(1) Power button.(SEE P14)
(2) Point button.
(3) Mouse Left button.
(4) Menu-up button / Menu-down button.
(5) Menu button.
(6) Keystone up /down button.
(7) PC button.(SEE P15)
(8) Video button.(SEE P16)
(9) Auto button.(SEE P15)
(10) Blank button.
(11) Still button.
(12) Zoom in / Zoom out button.(SEE P17)
(13) Mute button.(SEE P15)
(14) Volume up / down button.(SEE P15)
(15) Menu-left button / Menu-right button.
Menu-up button / Menu-down button.
(SEE P16)
(16) Mouse Right button.
(17) Laser pointer button.

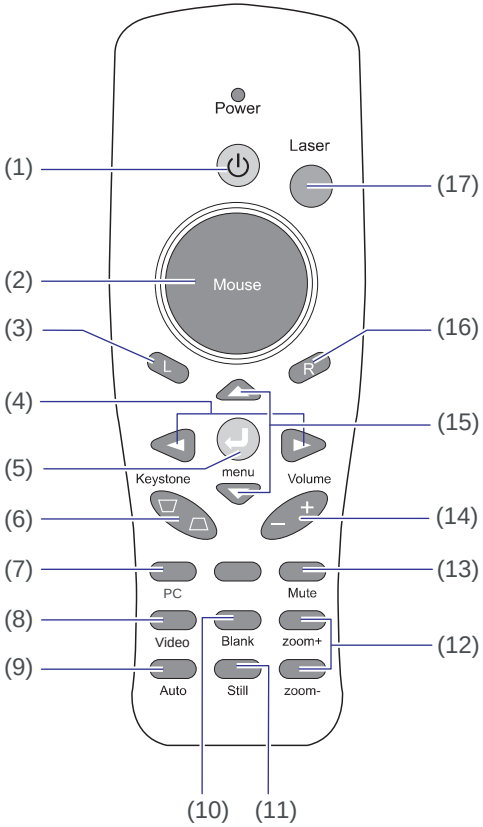

Setting up

Install the projector according to the environment and manner the projector will be used in.

Arrangement

The distance between the projector and screen determines the actual image size.Refer to this table, in case of 4:3 aspect ratios. The value Ⓜ shown in the table are calculated for a full size screen.

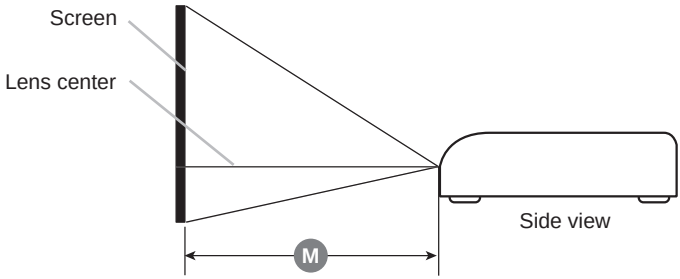

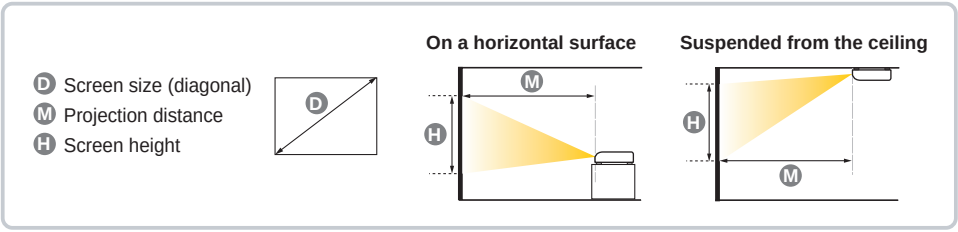

Screen size (inch)	Ⓜ Distance (m)		Ⓜ Distance (feet)	
	Tele	Wide	Tele	Wide
40	1.50	1.24	4.91	4.06
60	2.23	1.85	7.32	6.06
70	2.60	2.15	8.52	7.05
80	2.97	2.45	9.73	8.05
100	3.70	3.06	12.14	10.04
200	7.37	6.10	24.18	20.01
300	11.04	9.14	36.22	29.97

NOTE ► Allowing the proper amount of space on the top, sides, and rear of the projector cabinet is critical for proper air circulation and cooling of the unit. When in against at wall, leave about 20cm (7.9in.) between the projector and the wall.

⚠WARNING

• Place the projector in a stable horizontal position.
If the projector falls or is knocked over it could cause injury and/or damage to the projector. Using a damaged projector could then result in fire and/or electric shock.
(1) Do not place the projector on an unstable, slanted or vibrational surface such as a wobbly or inclined stand.
(2) Do not place the projector on its side, front or rear position.
(3) Consult with your dealer before a special installation such as suspending from a ceiling.

• Place the projector in a cool place, and ensure that there is sufficient ventilation. The high temperature of the projector could cause fire, burns and /or malfunction of the projector.
(1) Do not stop-up, block or otherwise cover the projector's vents.Keep a space of 20 cm or more between the sides of the projector and other objects such as walls.
(2) Do not place the projector on metallic thing or anything weak in heat.
(3) Do not place the projector on carpet, cushions or bedding.
(4) Do not place the projector in direct sunlight or near hot objects such as heaters.
(5) Do not place anything near the projector lens or vents, or on top of the projector.
(6) Do not place anything that may be sucked into or stick to the vents on the left of the projector. This projector has some intake vents also on the left.

• Avoid placing the projector in smoky, humid or dusty place.

• Do not place the projector anyplace where it may get wet. Getting the projector wet or inserting liquid into the projector could cause fire, electric shock and/or malfunction of the projector.
(1) Do not place the projector in a bathroom or the outdoors.
(2) Do not place anything containing liquid near the projector.

⚠CAUTION

Placing the projector in such places could cause fire, electric shock and/or malfunction of the projector.
(1) Do not place the projector near humidifiers, smoking spaces or a kitchen.
(2) Position the projector to prevent light from directly hitting the projector's remote sensor.

Setting up

Connecting your devices

Be sure to read the manuals for devices before connecting them to the projector Make sure that all the devices are suitable to be connected with this product, and prepare the cables required to connect. Please refer to the following illustrations to connect them.

PC

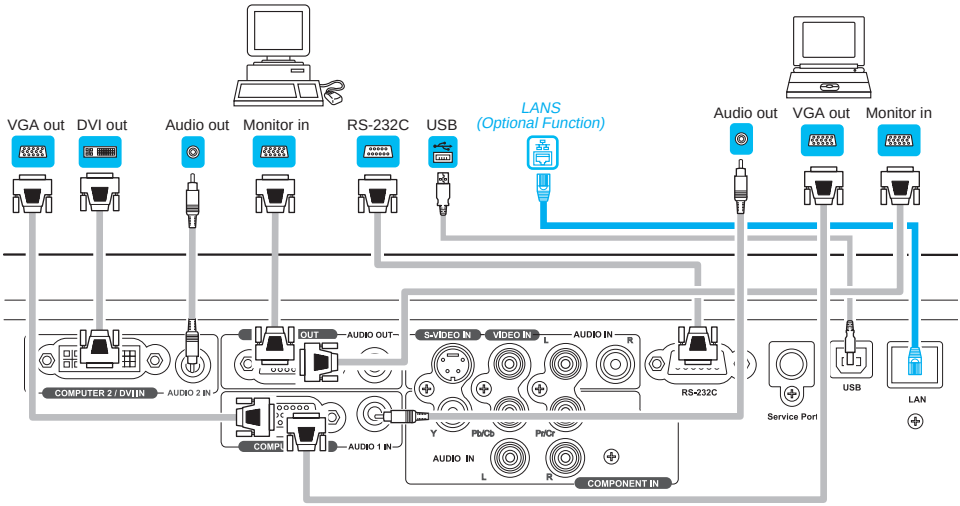

Speaker

VCD/DVD Player

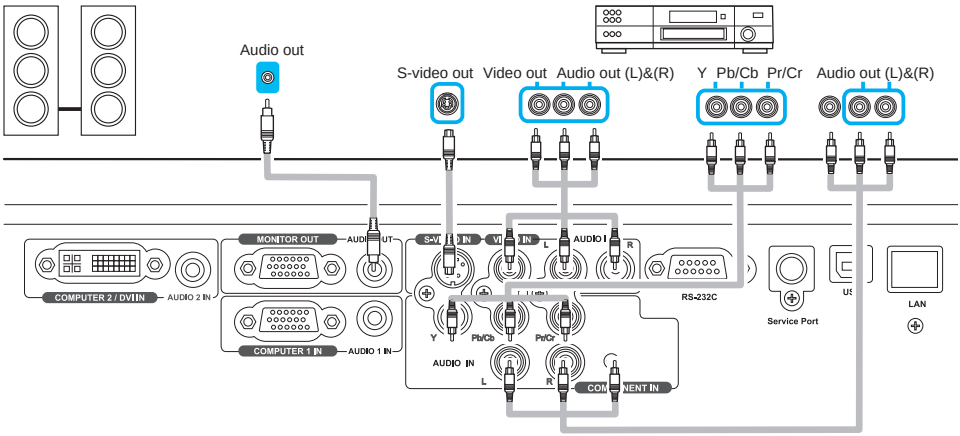

Connecting your devices(Continue)

NOTE ►Be sure to read the manuals for devices before connecting them to the projector, and make sure that all the devices are suitable to be connected with this product. Before connecting to a PC, check the signal level, the signal timing, and the resolution.
- Some signal may need an adapter to input this projector.
- Some PCs have multiple screen display modes that may include some signals which are not supported by this projector.
-The best display performance will be achieved if the resolutions of the input signal and the projector panel are identical.

►While connecting, make sure that the shape of the cable's connector fits the port to connect with. And be sure to tighten the screws on connectors with screws.

►When connecting a laptop PC to the projector, be sure to activate the PC's external monitor(RGB) output. (Set the laptop PC to CRT display or to simultaneous LCD and CRT display.) For details on how this is done, please refer to the instruction manual of the corresponding laptop PC.

►In some cases, this projector may not display a proper picture or display any picture on screen. For example, automatic adjustment may not function correctly with some input signals. An input signal of composite sync may confuse this projector, so the projector may not display a proper picture.

⚠WARNING ►Do not disassemble or modify the projector and accessories.
►Be careful not to damage the cables, and do not use damaged cables.

⚠CAUTION ►Turn off all devices and unplug their power cords prior to connecting them to projector. Connecting a live device to the projector may generate extremely loud noises or other abnormalities that may result in malfunction or damage to the device and the projector.
►Use appropriate accessory or otherwise designed cables. Ask your dealer about non-accessory cables which may have other length or equipped with a core. For cables with a core only at one end, connect the end with the core to the projector.
►Make sure that devices are connected to the correct ports. An incorrect connection may result in malfunction or damage to the device and the projector.

Setting up

Connecting power supply

1. Connect the connector of the power cord to the AC inlet of the projector.
2. Firmly plug the power cable's plug into the outlet.The POWER indicator will begin blinking in green.The projector work on stand by mode.

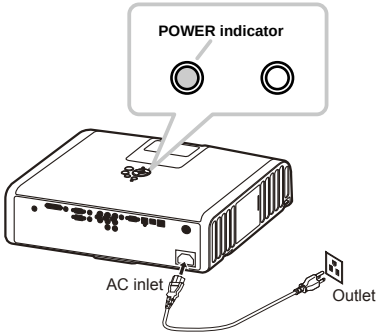

⚠WARNING

- ►Please use extra caution when connecting the power cord, as incorrect or faulty connections may result in fire and/or electrical shock.
- ►Only use the power cord that came with the projector. If it is damaged, contact your dealer soon.
- ►Only plug the power cord into an outlet rated for use with the power cord's specified voltage range. The power outlet should be close to the projector and easily accessible. Remove the power cord for complete separation.
- ►Never modify the power cord.

Using the Security Anchor

The product has design security anchor and PIN LOCK functions (SEE P31)to help prevent unauthorized removal projector.

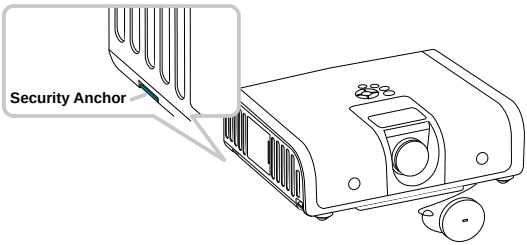

⚠WARNING

►Do not use the security anchor to prevent the projector from falling down or held, since it is not designed for it.

NOTE ►The security anchor is not comprehensive theft prevention measures. It is intended to be used as supplemental theft prevention measure.

Using the Hiding-Styled Handle

Refer to the picture operation direction to pull the handle.

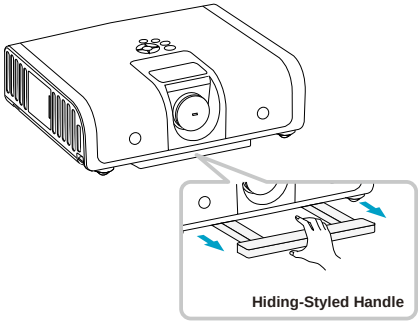

NOTE ►This handle is designed to carry the projector for short distance only.
►Please do not have added on other goods to use together, it can damage the projector.

Remote control

Putting batteries

Please set the batteries to the remote control before using it. If the remote control starts to malfunction, try to replace the batteries. If you will not use the remote control for long period, remove the batteries from the remote control and store them in a safe place.

1. Remove the battery cover.
   Slide back and remove the battery cover in the direction of the arrow.

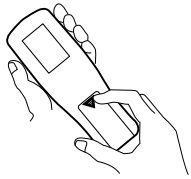

2. Insert the batteries.
   Align and insert the two AAA batteries according to their plusminus terminals

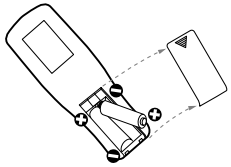

3. Close the battery cover.
   Replace the battery cover in the direction of the arrow and snap it back into place.

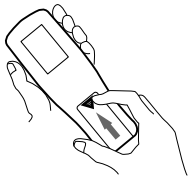

⚠WARNING ***About the Battery***

►Always handle the batteries with care and use them only as directed. Improper use may result in battery explosion, cracking or leakage, which could result in fire, injury and/or pollution of the surrounding environment.
►Be sure to use only the batteries with the mentioned specification.
►Do not use batteries of different types at the same time.
►Do not mix a new battery with used one. Make sure the plus and minus terminals are correctly aligned when loading a battery.
►Keep a battery away from children and pets.
►Do not recharge, short circuit, solder or disassemble a battery.
►Do not allow a battery in a fire or water.
►Keep batteries in a dark, cool and dry place. If you observe a leakage of a battery, wipe out and then replace a battery. If it adhere your body or clothes, rinse well with water immediately.
►Dispose of batteries in accord with environmental laws.

Remote control

About the remote control signal

1. The remote control works with the projector's remote sensor. This projector have 2 remote sensors on the front and back.
2. The sensor senses the signal within the following range when the sensor is active:30 degrees (15 degrees to the left and right of the sensor) within 7 meters about.

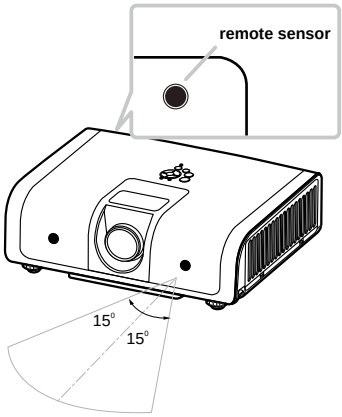

NOTE ► Laser pointer of the remote control is used in place of a finger or rod. Never look directly into the laser beam outlet or point the laser beam at other people.

Using as a simple PC mouse & keyboard

The enclosed remote control works as a simple mouse and keyboard of the PC, when the projector's USB port connects with the PC's mouse port via a mouse cable.(SEE P4)

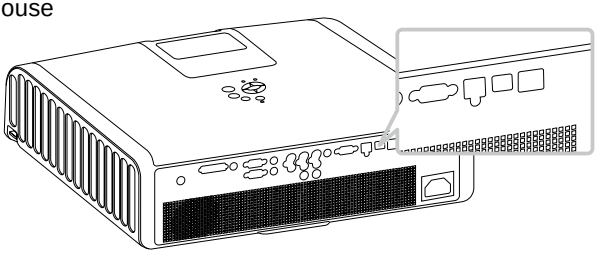

⚠CAUTION ►Improper use of the simple mouse & keyboard function could damage your equipment. While using this function, please connect this product only to a PC.

Power on/off

Turning on the power

1. Make sure that the POWER indicator turns in steady green and the lens cover is removed.
2. Press the STANDBY/ON button on the projector or the remote control.
3. The projection lamp will light up, the LAMP indicator will not light in red and the POWER indicator will begin light in green.

To display the picture, select an input signal according to the section "Selecting an input signal" (SEE 15).

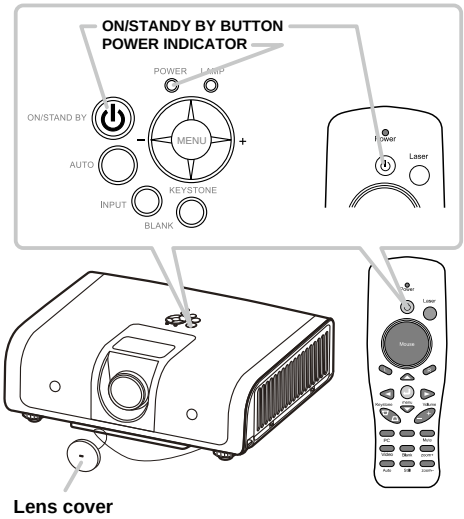

Turning off the power

1.Press the ON/STAND BY button on the projector or the remote control. The message [Power off. Please press key again to power off.] will appear on the screen for about 5 seconds.Press again and the projector lamp will go off, the POWER indicator will begin light in green and the LAMP indicator will begin blinking in red.

2.The LAMP indicator will stop blinking and light in red. And then the POWER indicator begin blinking in green when the lamp cooling is complete. Unplug the power cable.

Attach the lens cap.Do not turn the projector on immediately after turning off.Turning projector on again too soon could shorten the lifetime of some consumable parts of the projector.

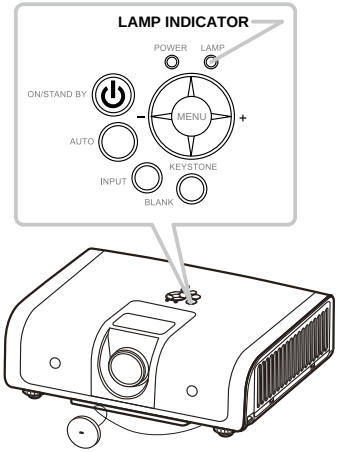

⚠WARNING►A strong light is emitted when the projector's power is on. Do not look into the lens of the projector or look inside of the projector through any of the projector's openings.

►Do not touch around the lamp cover and the exhaust vents during use or just after use, since it is too hot.

►Remove the power cord for complete separation.

Adjusting the volume

1. Press the VOLUME button on the remote control. A dialog will appear on the screen to aid you in adjusting the volume.
2. Use the +/- cursor buttons to adjust the volume. To close the dialog and complete the operation, press the MENU button and the menu will disappear after a few seconds.

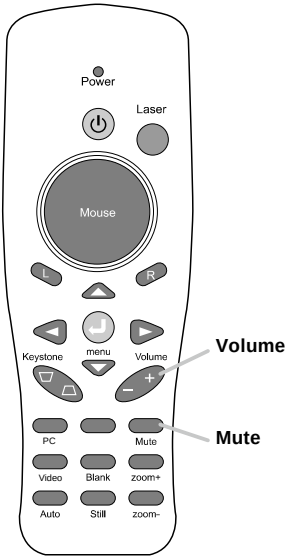

Adjusting the mute

1. Press the MUTE button on the remote control. A dialog will appear on the screen indicating that you have muted the sound.
2. If you do not do anything, the dialog will automatically disappear after a few seconds.
3. Press the MUTE button will bring the sound back to the level before muting.

Selecting an input signal

1. To select a new input,press the PC button on the projector or remote control. Each time you press the button, the projector switches its input port as below.

→ COMPUTER IN1 → COMPUTER IN2 → DVI →

2. If press the Video button on the remote control.Each time you press the button, the projector switches its input port as below.

→ YPbPr → COMPOSITE VIDEO → S-VIDEO →

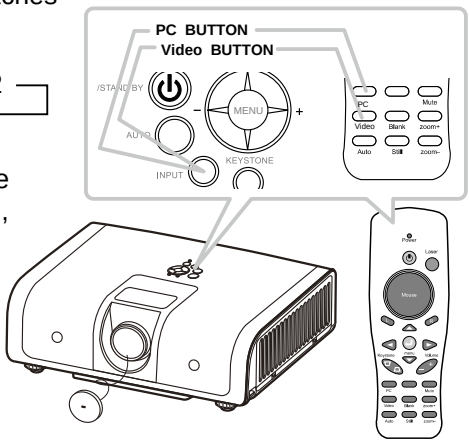

(continued on next page)

Selecting an input signal (continued)

3. If press AUTO button on the projector. Each time you press the button, the projector's image is in Blank mode. Automatically adjusts the setting to match the current input.

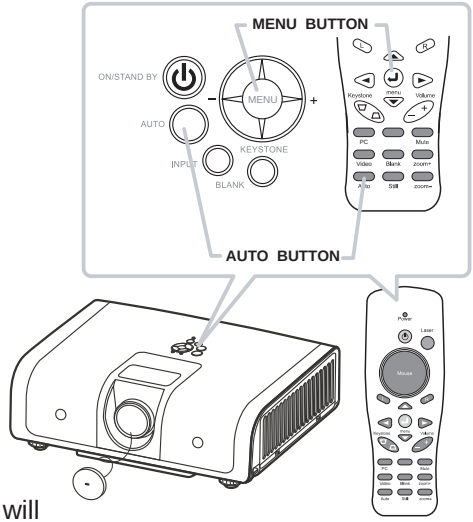

Searching an input signal

1. Please Press the MENU button on the projector or remote control.
2. After you can use the ► cursor button to chiose [ON] in the AUTO SEARCH item of the SETTING menu.

The projector will start to check its input ports in order to find any input signals. When an input is found, the projector will stop searching and display the image. If no signal is found, the projector will return to the source before searching and the projector switches its input port as below.

→ COMPUTER IN1 → COMPUTER IN2 → DVI → YPbPr → S-VIDEO ← COMPOSITE VIDEO ←

Selecting an aspect ratio

1. Press the MENU button on the projector or remote control.
2. After you can select the RESIZE item of the ADVANCED menu. And use the ◄ / ► cursor buttons to adjust the aspect ratio.

For a PC signal

4:3 → 16:9

For a video signal (s-video signal or component video signal)

4:3 → 16:9

For no signal

4:3 (fixed)

The RESIZE item does not work when no proper signal is inputted.
The NORMAL mode keeps the original aspect ratio setting.
Performing the automatic adjustment initializes the aspect ratio setting.
(continued on next page)

Adjusting the image position

When the place to put the projector is slightly uneven to the left or right, use the feet to place the projector horizontally. Using the feet can also tilt the projector in order to project at a suitable angle to the screen.
This projector has 2 feet and 2 knobs.
A foot is adjustable while pulling up the knob on the same side as it.

1. Holding the projector, pull the knobs up to loose the feet.
2. Position the front side of the projector to the desired height.
3. Release the knobs in order to lock the feet.
4. After making sure that the feet are locked, put the projector gently.

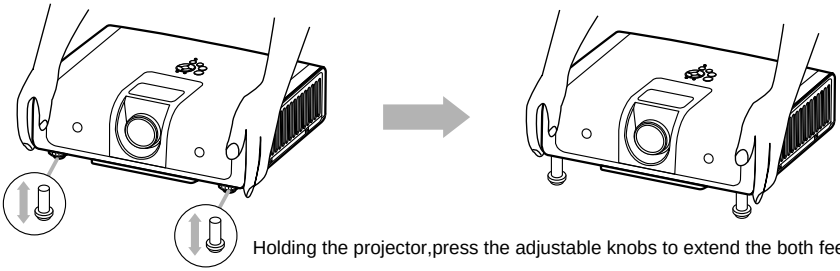

Holding the projector,press the adjustable knobs to extend the both feet.

⚠CAUTION ►Do not handle the knobs without holding the projector,since the projector may drop down.

Adjusting the zoom and focus

1. Use the focus ring to focus the picture.
2. Use the zoom ring to adjust the screen size.

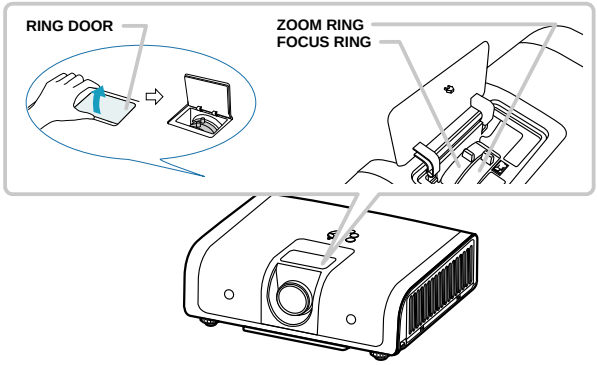

Correcting the keystone distortions

1. Please Press the MENU button on the projector or remote control.
2. After you can use the ◀/▶ cursor button to select the KEYSTONE V item of the SETTING menu and press the ◀/▶ button for keystone adjustment.

(1) The KEYSTONE V item will displays a dialog for keystone correction.
(2) To close the dialog and complete this operation, press the MENU button again. The dialog will automatically disappear after a few seconds if you do not do anything.
(3) The adjustable range of this correction will vary among inputs. For some input, this function may not work well.
(4) When the zoom adjustment is set to the TELE (telephoto focus), the automatic keystone distortion correction may be excessive. This function should be used when the zoom adjustment is set to the full WIDE (wide-angle focus) whenever possible.

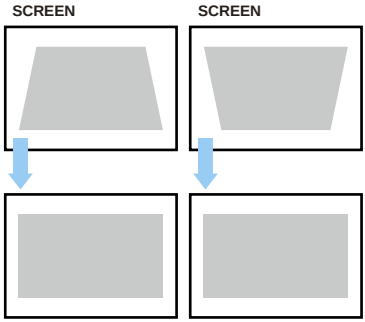

Press [Left] and [Right] buttons to correct keystone distortion.

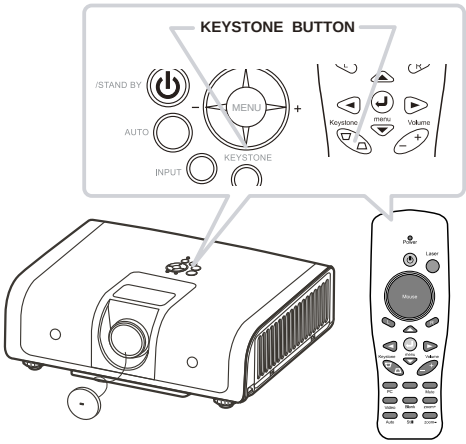

Stilling the screen

1. Press the Still button on the remote control.
   The [Still] indication will appear on the screen and the projector will go into the Still mode.

To exit the still mode and restore the screen to normal, press the still button again.
If the projector continues projecting a still image for a long time, the LCD panel might possibly be burned in. Do not leave the projector in the Still mode for too long.

Temporarily blanking the screen

1. Press the Blank button on the projector or remote control.
   The [Blank] indication will appear on the screen and the projector will go into the Blank mode.

To exit from the blank screen and return to the input signal screen, press the BLANK button again.
If the projector is left in Blank mode for more than 15 minutes, the projector will automatically shut off the lamp and begin to cool-down mode.

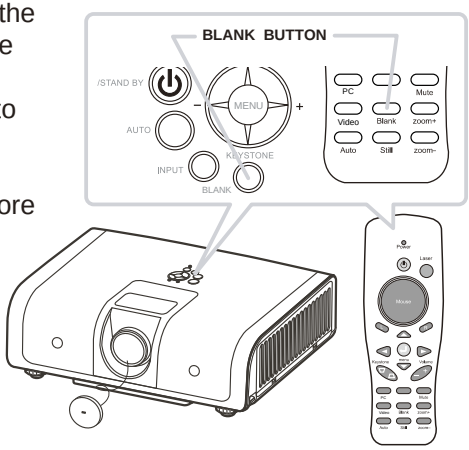

NOTE ►The sound is not connected with the blank screen function. If necessary, set the volume or mute first.

Using the menu function

This projector has the following categories:
ADVANCED, AUDIO, INPUT, PICTURE, PRESENTATION,SETTING and SECURITY. ADVANCED MENU consists of functions often used, and the other menus are classified into each purpose. Each of these menus is operated using the same methods. The basic operations of these menus are as follows.

1. Press the MENU button on the remote control or the projector.The MENU button on the projector works as the cursor buttons.
2. Use the ▲/▼ cursor buttons to select an category to operate.
3. Use the ◄/► cursor buttons to operate the category.Then press the ► cursor button, or the ENTER button to select an item. The lower layer menu of the selected item will appear.
4. Some functions cannot be performed when a certain input port is selected, or when a certain input signal is displayed.

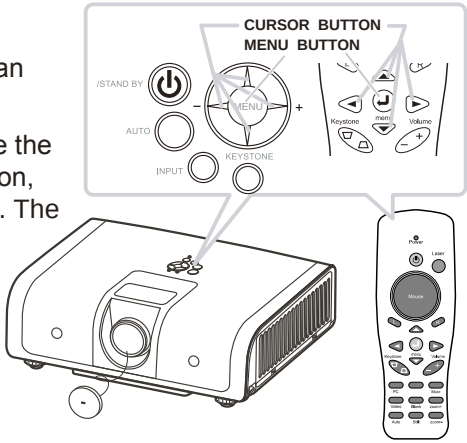

5. **Reset all**
After you select [Reset all] on the menu, the following confirmation message will appear on the screen. Press the MENU button or ignore the message to exit the [Reset All] function without changing any settings.

Reset all?

Please, press reset key to return default setting.

reset all **Yes** ▷
No ▷

If select to reset all, press [Yes].

Picture menu(PC Mode)

In the PICTURE category, items shown in the table below can be performed.
Select an item using the ▲/▼ cursor buttons, and press the► cursor button or ENTER button to execute the item. Then perform it according to the following table.

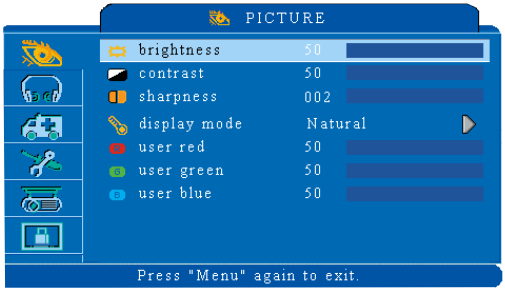

Item		Description
Brightness	000/50	Adjusts the overall image brightness. Dark⇔Light
Contrast	000/50	Adjusts the difference between strong and weak areas of the image. Weak⇔Strong
Sharpness	000/002	Adjusts the image sharpness Weak⇔Strong There may be some noise and/or the screen may flicker for a moment when an adjustment is made. This is not a malfunction.
Display mode		Select mode(► cursor button)
	Natural	Nature color(default)
	Cinema	Enhance contrast mode for Cinema mode
	User color	Adjustments of each RGB color
	Green Board	Adjusts the color settings and makes the projected image on a green board more visible.
	Powerful	Enhance brightness
	Video	Keep the soft tender color
	Presentation	For computer presentation use
	User color	Select (► cursor button)
	User Red User Green User Blue	000/50 000/50 000/50

Picture menu(Video Mode)

In the PICTURE category, items shown in the table below can be performed.
Select an item using the ▲/▼ cursor buttons, and press the► cursor button or ENTER button to execute the item. Then perform it according to the following table.

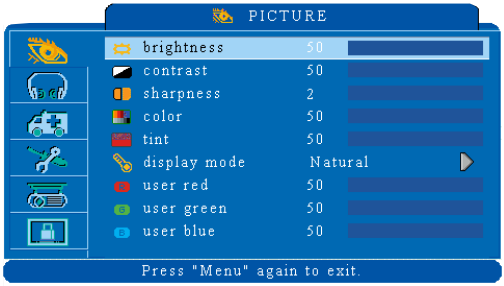

Item		Description
Brightness	000/50	Adjusts the overall image brightness. Dark⇔Light
Contrast	000/50	Adjusts the difference between strong and weak areas of the image. Weak⇔Strong
Sharpness	000/002	Adjusts the image sharpness Weak⇔Strong
Color	000/50	Adjusts the strength of whole color. Weak⇔Strong This item can be selected only for a video signal,s-video signal or component video signal.
Tint	000/50	Adjusts the image tint. Reddish⇔Greenish This item can be selected only for a video signal,s-video signal or component video signal.
Display mode		Select mode(► cursor button)
	Natural Cinema User color Green Board Powerful Video Presentation	Nature color(default) Enhance contrast mode for Cinema mode Adjustments of each RGB color Adjusts the color settings and makes the projected image on a green board more visible. Enhance brightness Keep the soft tender color For computer presentation use
	User color	Select (► cursor button)
	User Red User Green User Blue	000/50 000/50 000/50

AUDIO menu

In the AUDIO category, items shown in the table below can be performed. Select an item using the ▲/▼ cursor buttons, and press the► cursor button or ENTER button to execute the item. Then perform it according to the following table.

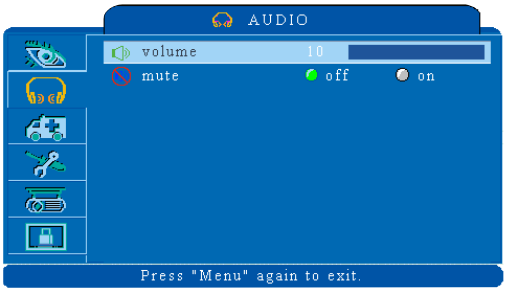

Item		Description
Volume	000/40	Adjusts the volume Low⇔High
Mute	off/on	Mutes the volume off/on

SETTING menu(PC Mode)

In the SETTING category, items shown in the table below can be performed.
When the source is computer.
Select an item using the ▲/▼ cursor buttons, and press the► cursor button or enter to execute the item. Then perform it according to the following table.

Item		Description
H position	000/50	Move the image position horizontally Right⇔Left This item can be selected only for a computer signal.Pressing the RESET button when the H POSITION is selected will reset the H POSITION to the default setting.
V position	000/50	Move the image position vertically Down⇔Up This item can be selected only for a computer signal.Pressing the RESET button when the V POSITION is selected will reset the V POSITION to the default setting.
Phase	000/19	Set the synchronization polarity
Frequency	000/100	Set the horizontal scanning frequency
Auto keystone	execute	Automatically Corrects keystone distortion in image.
Keystone V	-80/+80	Corrects vertical keystone distortion in image manually. Shrink the button of the image ⇔Shrink the top of the image The adjust able range of this function will vary with the type of input signal. For some input, this function may not work well.
Auto sync	execute	Sets all of the above settings automatically. It can not include both Auto Keystone and Keystone V items to implement the function.
Auto search	off/on	Search signal source manually or automatically.

SETTING menu(Video Mode)

In the SETTING category, items shown in the table below can be performed.
When the source is video.
Select an item using the ▲/▼ cursor buttons, and press the► cursor button or ENTER button to execute the item. Then perform it according to the following table.

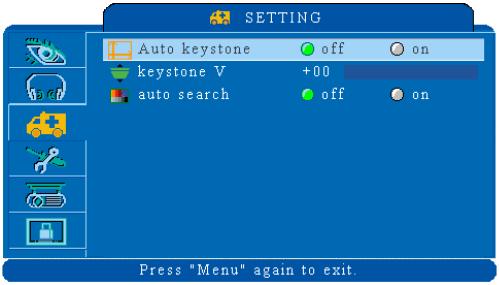

Item		Description
Auto keystone	execute	Automatically Corrects keystone distortion in image manually.
Keystone V	-80/+80	Corrects vertical keystone distortion in image manually. Shrink the button of the image⇔Shrink the top of the image The adjustable range of this function will vary with the type of input signal. For some input, this function may not work well.
Auto search	off/on	Search signal source manually or automatically.

ADVACED menu

In the ADVANCED category, items shown in the table below can be performed. Select an item using the ▲/▼ cursor buttons, and press the► cursor button or ENTER button to execute the item. Then perform it according to the following table.

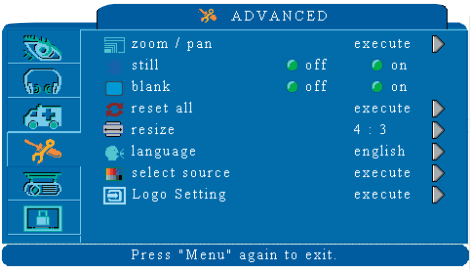

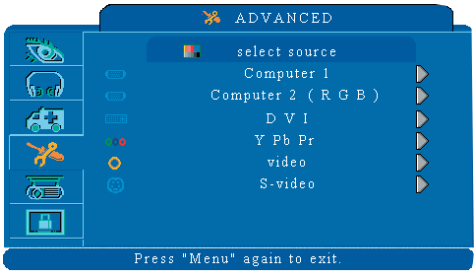

Item		Description
Zoom/pan	execute	Execute digital zoom and pan function
Still	on/off	Freezes the current image on the screen.
Blank		Hide the image, displays a blank, black screen.
Reset all		Resets all Menu function to their factory default values.
Resize		4:3
Language	English (default)	Select the language that the menu and on screen massage are display in ENGLISH⇔简体中文⇔繁體中文⇔DEUTSCH ⇔FRANÇAIS⇔ITALIANO⇔ESPAÑOL ⇔POLSKI⇔日本語⇔ 한글
Select source		Select the input source from: → COMPUTER IN1 → COMPUTER IN2 → DVI → YPbPr → VIDEO → S-VIDEO → The search is started from the current port. Then when an input is found, the projector will stop searching and display the image.
Logo Setting	execute	This function allows you to customize the start-up logo.

(continued on next page)

Logo Setting

This function allows you to customize the start-up logo.

IMPORTANT:
To execute the logo function, you must to enter the PIN code first.

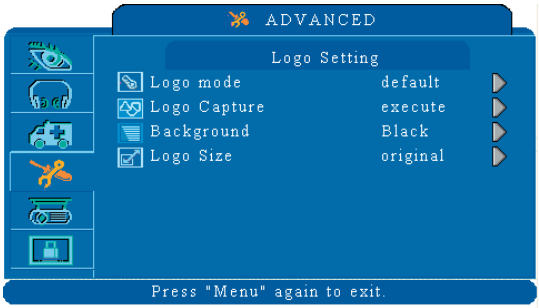

Item		Description
Logo Mode		Select Mode(► cursor button)
	User Default Off	The image you captured. The factory logo. The blank image you can select color with background function.
Logo Capture	Execute	Start to capture the image.
Background	Black Blue White	Set background color
Logo Size	Original Full	Display the segment of the image in original size at center of the screen. Expend the image to full screen.

(continued on next page)

Logo capture

How to use this function?

1. Select Logo capture item in the logo setting menu, and press ► cursor button.
2. You can see the red frame that can select captured area.
3. Use 4 direction bottoms to adjust the position of the frame.
4. Press “MENU” to start capturing and display a dialog.

2

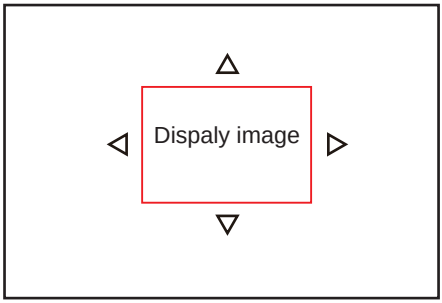

4

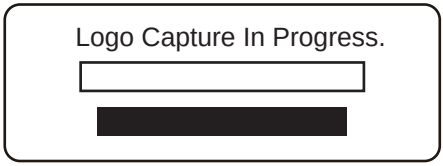

NOTE ► You can only capture an image from computer mode.
► The area that can be captured is 512 x 384 dots.

PRESENTATION menu

In the PRESENTATION category, items shown in the table below can be performed.
Select an item using the ▲/▼ cursor buttons, and press the► cursor button or ENTER button to execute the item. Then perform it according to the following table.

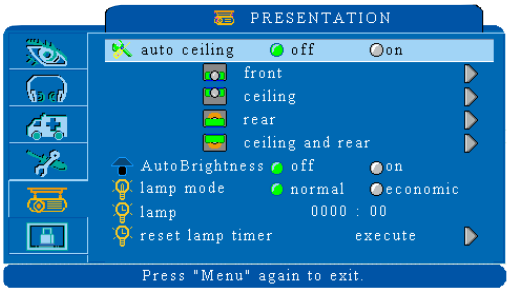

Item		Description
Auto ceiling	off/on	Automatically inverts the image when the projector is turned upside down i.e. When the projector is mounted on the ceiling.
Front	execute	Normal projection mode.
Ceiling	execute	Mirrors the image vertically, used when the projector is mounted upside down.
Rear	execute	Mirrors the image horizontally, used when projecting onto a rear projection screen.
Ceiling and Rear	execute	Mirrors the image horizontally and vertically, used when the projector is mounted upside down and projecting onto a rear projection screen.
Auto Brightness	off/on	Auto detects brightness; it turns to economic mode automatically when the ambient light is low.When the lamp mode is in economic,auto brightness will not work.
Lamp mode	normal economic	Economic mode reduces the lamp brightness.
Lamp		Show Lamp timer
Reset lamp timer (optional)	execute	After changing a new lamp,execute this function for reset the Lamp timer.(see below)

(continued on next page)

The lamp time is the time counted after the last resetting. It is shown in the PRESENTATION menu as the usage time of the lamp.Pressing the RESET button or the ► button displays a dialog.To reset the lamp time, select the RESET using the ► button.

Reset Lamp Timer?
Select “No” to exit.

Lamp Reset **Yes** ▷
No ▷

Please reset the lamp time only when you have replaced the lamp, for a suitable indication about the lamp. For the lamp replacement, see the selection "Lamp" . (SEE P32)

NOTE ► The replacement warning message is set to appear after about 2000 hours of lamp use in order to maintain the initial brightness and quality of the projected images. When the lamp replacement message appears, replace the lamp with a new one as soon as possible, even if it is still working.

SECURITY menu

In the SECURITY category, items shown in the table below can be performed.
Select an item using the ▲/▼ cursor buttons, and press the► cursor button or ENTER button to execute the item. Then perform it according to the following table.

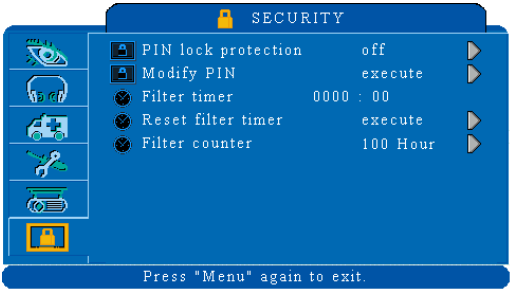

Item		Description
PIN LOCK PROTECTION	Off On 1 On 2	Off ：Turn off PIN lock protection. On 1：PIN code is needed only first time after AC switched off. On 2：PIN code is needed every time the projector been turned on. ⚠CAUTION : ►Once the PIN code had been set, the projector can't be used unless you entered the correct PIN code. ►To avoid unnecessary trouble, if you activate the [PIN Lock Protection] , it is highly recommended that you write down the PIN code and store it in a safe place.
Modify PIN	execute	1.Press the MENU button on the projector or remote control. 2.Use the ► cursor button to select the Modify PIN item of the SECURITY category. 3.Press ► cursor button to change PIN lock protection mode. 4.Please Enter the original PIN code. (1) If the PIN is correct, system will allow you to change a new PIN code. (2) If the PIN is incorrect, a "Code Error" message will appear. 5.Please Enter a new PIN code. And then enter again to confirm. NOTES ► To change the PIN lock protection state, you must enter the PIN code first. ► Please enter: 0000 for first-time use.(default) ►Write your selected password down here in this manual so that it will help you avoid the trouble of forgetting the password,see the selection "Appendix". (SEE P41)

(continued on next page)

SECURITY menu

In the SECURITY category, items shown in the table below can be performed.
Select an item using the ▲/▼ cursor buttons, and press the► cursor button or ENTER button to execute the item. Then perform it according to the following table.

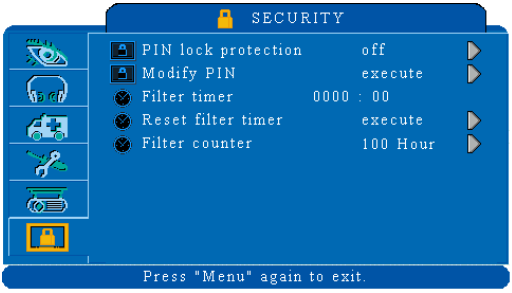

Item		Description
Filter timer		Showing the usage of filter hour.
Reset filter timer		Reset the filter timer after cleaning or change filter
Filter counter	500 Hours 800 Hours 1000 Hours	Select from (500Hs/800Hs/1000 Hs) depending on the use environment.(default : 500 Hours) Please see as below.

Auto Filter Alert

The function is to remind user for filter cleaning or replacement.
It is in the SECURITY category as the usage time of the air filter.Pressing the ► cursor button displays a dialog. And then select an appropriate filter counter time according to the use environment.
When the operation time reached the timer set, a warning message will appears on the screen to remind user that the filter cleaning is required.

NOTE ► Select from (500H/800H/1000H) according to the use environment. Filter counter can set to longer in a clean environment.
► Please reset the Filter time only when you have replaced the filter, for a suitable indication about the filter. For the filter replacement, see the section "Air Filter" (SEE P34)

(continued on next page)

PIN key in Operation

When the projector is turned on and the PIN lock protection is set to[on] , the image will show for right side.

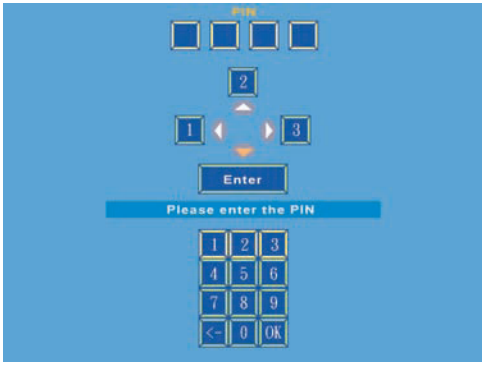

1. Press the MENU button on the projector or remote control.Enter PIN code by Keypad or Remote control.
2. How to enter a PIN code?
   Control panel use way
   Remote control use way

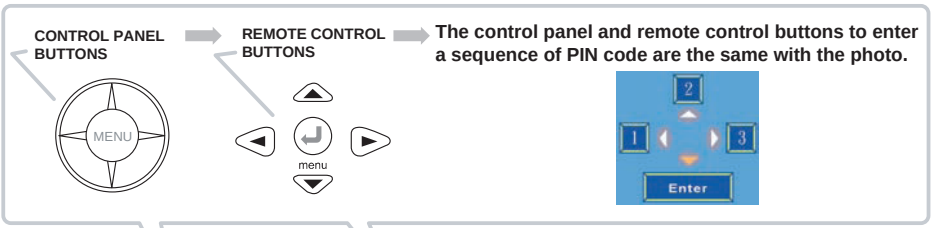

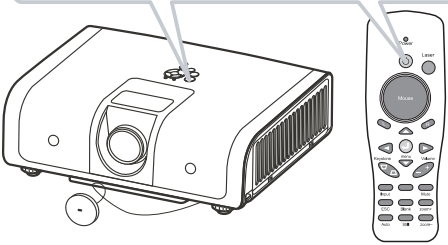

(1) Press ◄ button : Select the [1] .
(2) Press ▲ button : Select the [2] .
(3) Press ► button : Select the [3] .
(4) Press ▼ button : Select the [Enter] move to next row.
(5) Press <- (backspace) item :
In case to entered a wrong digit, select to delete the wrong digit you entered.
(6) Press OK (backspace) item :
Once all four digits of the PIN been entered, select to confirm.

NOTE ►If the PIN is correct, projector will show normal image.
►If the PIN is incorrect, a “Enter new code” message will be showing. Please try again.
►If the PIN been input incorrectly three times, a warning message will show up and the projector will shut itself down after 20 seconds.
►If you lost the PIN completely, contact your dealer for help.

Lamp

A lamp has finite product life. Reserving is recommended.

Replacing the lamp

1. Turn the projector off, and unplug the power cord. Allow the projector to cool for at least 45 minutes.
2. If the projector is mounted on a ceiling, contact your local dealer to replace the lamp.

In case of replacement by yourself,

3. Remove the Lamp door.(marked by arrow)
4. Loosen 2 screws of the lamp holder.
   Grasp the handle on the top of the lamp and pull the lamp straight up out of the projector.
5. Insert the new lamp, and retighten firmly the 2 screws of the lamp holder and lock the Lamp Door.(marked by arrow)

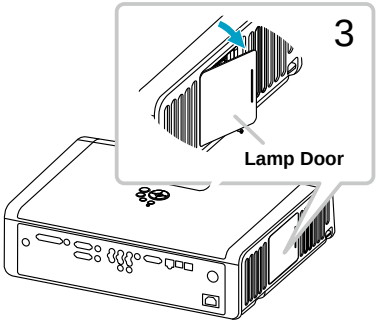

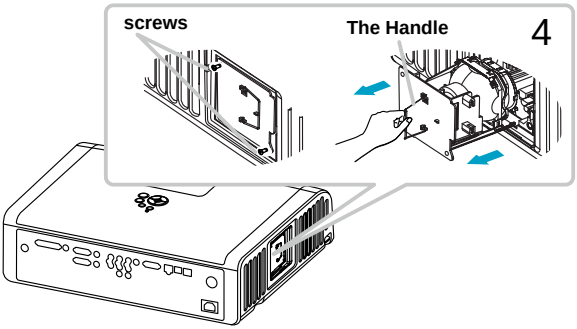

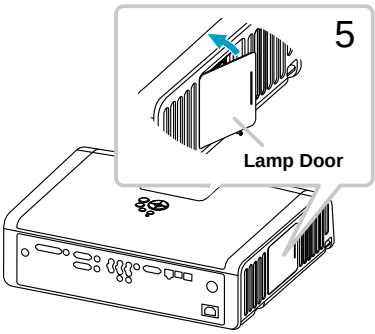

⚠CAUTION ►Do not touch any inside of the projector, while the lamp is taken out.

⚠WARNING ►Do not touch the bulb. Touching the bulb will greatly decrease the life of the lamp and could cause the bulb to explode.

NOTE ►Please reset the lamp time only when you have replaced the lamp, for a suitable indication about the lamp.

Lamp Warning

⚠ HIGH VOLTAGE ⚠ HIGH TEMPERATURE ⚠ HIGH PRESSURE

⚠WARNING ►The projector uses a high-pressure mercury glass lamp. The lamp can break with a loud bang, or burn out, if jolted or scratched, handled while hot, or worn over time. When the bulb bursts, it is possible for shards of glass to fly into the lamp housing, and for gas containing mercury to escape from the projector's vent holes.

►**About disposal of a lamp:** This product contains mercury lamp; do not put it in a trash. Dispose of it in accordance with environmental laws.

- For lamp recycling, go to www.lamprecycle.org. (in the US).
- For product disposal, contact your local government agency or www.eiae.org (in the US) or www.epsc.ca (in Canada).

For more information, call your dealer.

Disconnect the plug from the power outlet	►If the lamp should break (it will make a loud bang when it does), unplug the power cord from the outlet, and make sure to request a replacement lamp from your local dealer. Note that shards of glass could damage the projector's internals, or cause injury during handling, so please do not try to clean the projector or replace the lamp yourself. ►If the lamp should break (it will make a loud bang when it does), ventilate the room well, and make sure not to breathe the gas that comes out of the projector vents, or get it in your eyes or mouth. ►Before replacing the lamp, turn the projector off and unplug the power cord, then wait at least 45 minutes for the lamp to cool sufficiently. Handling the lamp while hot can cause burns, as well as damaging the lamp.
	►Never unscrew except the appointed (marked by an arrow) screws. ►Do not open the lamp cover while the projector is suspended from above. This is dangerous, since if the lamp's bulb has broken, the shards will fall out when the cover is opened. In addition, working in high places is dangerous, so ask your local dealer to have the lamp replaced even if the bulb is not broken. ►Do not use the projector with the lamp cover removed. At the lamp replacing, make sure that the screws are screwed in firmly. Loose screws could result in damage or injury.
	►Use only the lamp of the specified type. ►If the lamp breaks soon after the first time it is used, it is possible that there are electrical problems elsewhere besides the lamp. If this happens, contact your local dealer or a service representative. ►Handle with care: jolting or scratching could cause the lamp bulb to burst during use. ►Using the lamp for long periods of time, could cause it dark, not to light up or to burst. When the pictures appear dark, or when the color tone is poor, please replace the lamp as soon as possible. Do not use old (used) lamps; this is a cause of breakage.

Air Filiter

Please check and clean the air filter periodically. When the dialog have warning message prompts you to clean the air filter, comply with it as soon as possible. Replace the air filter when it is damaged or too soiled.

Replacing the air filter

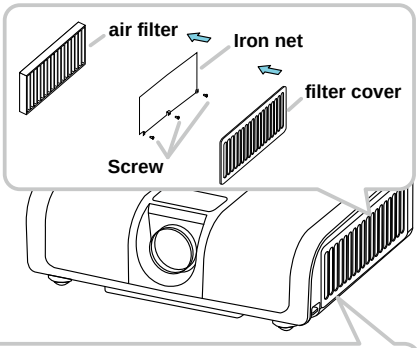

When the used time reaches the filter counter time,the projector will display message such as" Filter Replace.Filter has been used more than 100 hours."
If the filter is difficult to clean or if it is deteriorating, also ask the dealer to replace the filter.

1. Turn the projector off, and unplug the powercord. Allow the projector to sufficiently cool down.
2. Remove the filter cover from the right of projector.
3. Pull out the air filter.
4. Install the new air filter.
5. And then put the filter cover back on.
6. After please select the Reset filter timer item of the Security menu and display a dialog.

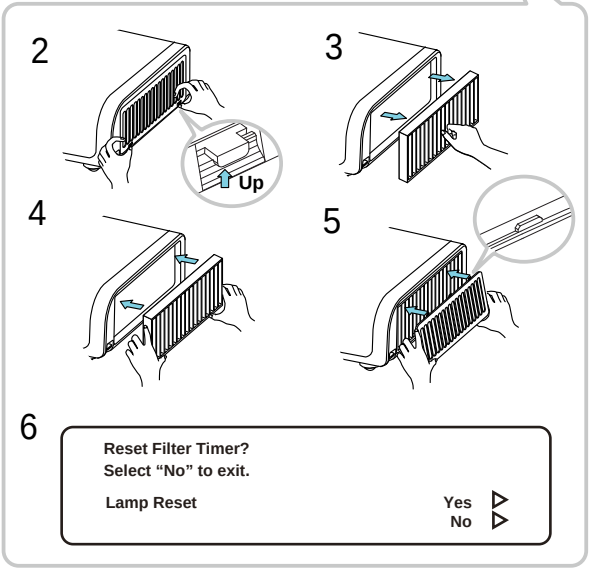

⚠WARNING
►Use only the air filter of the specified type. Do not use the projector without the air filter or the filter cover. It could result in a fire or malfunction to the projector.

NOTE
►If the internal temperature become too high because of filter blocked, the projector may turn off itself to prevent the internal heat level rising.

Other care

Inside of the projector

In order to ensure the safe use of your projector, please have it maintained inspected by your dealer about once every year.

Caring for the lens

If the lens is flawed, soiled or fogged, it could cause deterioration of display quality. After making sure that the projector is cool adequately, lightly wipe the lens with a commercially available lens-cleaning wipe. Do not touch the lens directly with your hand. Please handle with care.

NOTE ►After making sure that the projector is cool adequately, lightly wipe the lens with a commercially available lens-cleaning wipe. Do not touch the lens directly with your hand.

⚠WARNING ►Before maintenance, make sure the power cable is not plugged in, and then allow the projector to cool sufficiently. The care in a high temperature state of the projector could cause a burn and/or malfunction to the projector.
►Never try to maintain the inside of the projector by your self.
►Avoid wetting the projector or inserting liquids in the projector. It could result in a fire, an electric shock, and/or malfunction to the projector
►Do not put anything containing water, cleaners or chemicals near the projector.
►Do not use aerosols or sprays.

⚠CAUTION ►Please take right care of the projector according to the following. Incorrect care could cause not only an injury but adverse influence such as discoloration, peeling paint, etc.
►Do not use cleaners or chemicals other than those specified in this manual.
►Do not polish or wipe with hard objects.

Regarding the indicator lamps

When operation of the LAMP and POWER indicators differs from usual, check and cope with it according to the following table. If the problem cannot be resolved contact your dealer.

POWER indicator	LAMP indicator	Conditions	Description
Blinking In Green	**off**	**Stand by mode**	Projector is ready to be turned on (normal)
Lighting *In Green*	**off**	**On mode**	Projector is on and operating normally
Lighting In Green	*Blinking In Red (Slow)*	**Cool down mode**	Projector is in cool-down mode and will not respond to user input (normal)
Lighting In Green	*Blinking In Red (Fast)*	**Fan fault mode**	The projector has detected a problem with an Slowinternal fan, the lamp will shut off automatically, contact your dealer
Blinking In Green	Lighting In Red	**Lamp cover open**	The lamp cover is open or there is a problem with the lamp. If the lamp door is closed and replacing the lamp does not correct the issue, contact your dealer.
Blinking In Green	*Blinking In Red*	**High temperature**	The projector has overheated and shut itself down. Correct the overtemp condition immediately. 1. Check that the ventilation slots are freefrom obstructions 2. Check the cleanliness of the air filter.

⚠WARNING ►Never use the projector if abnormal operations such as smoke, strange odor, excessive sound, damaged casing or elements or cables, penetration of liquids or foreign matter, etc. should occur. In such cases, immediately disconnect the power plug from the power outlet. After making sure that the smoke or odor has stopped, contact your dealer.

NOTE ► When the interior portion has become overheated, for safety purposes, the projector is automatically shut down, and the indicator lamps may also be turned off. In such a case, disconnect the power cord, and wait at least 45 minutes. After the projector has sufficiently cooled down, please make confirmation of the attachment state of the lamp and lamp cover before turn the power on again.

Mistaken for machine defects

About the phenomenon confused with a machine defect, check and cope with it according to the following table.

Phenomenon	Cases not involving a machine defect	Reference page
Power does not turn on.	Correctly confirm the power cord.	
	The main power source has been interrupted during operation such as by a power outage (blackout), etc. Please disconnect the power plug from the power outlet, and allow the projector to cool down at least 45 minutes, then turn the power on again.	14
	Either there is no lamp and/or lamp cover, or either of these has not been properly fixed. Please turn the power off and disconnect the power plug from the power outlet, and allow the projector to cool down at least 45 minutes. After the projector has sufficiently cooled down, please make confirmation of the attachment state of the lamp and lamp cover, and then turn the power on again.	14
Neither sounds nor pictures are outputted. (No video / audio)	**The signal cables are not correctly connected.** Correctly connect the connection cables.	8
	Signal source does not correctly work. Correctly set up the signal source device by referring to the manual of the source device.	–
	The input changeover settings are mismatched. Select the input signal, and correct the settings.	15
Sound does not come out.	**The signal cables are not correctly connected.** Correctly connect the audio cables.	8
	The MUTE function is set to on. Restore the sound pressing the MUTE or VOLUME button on the remote control.	15
	The volume is adjusted to an extremely low level. Adjust the volume to a higher level using the menu function or the remote control.	15
No pictures are displayed.	**The lens cover is not removed.** Remove the lens cover.	14
	The signal cables are not correctly connected. Correctly connect the connection cables.	8

(continued on next page)

Mistaken for machine defects (continued)

Phenomenon	Cases not involving a machine defect	Reference page
No pictures are displayed. (continued)	**The brightness is adjusted to an extremely low level.** Adjust BRIGHTNESS to a higher level using the menu function or the remote control.	21
	The computer cannot detect the projector as a plug and play monitor. Make sure that the computer can detect a plug and play monitor using another plug and play monitor.	–
	The BLANK screen is displayed. Press the BLANK button on the remote control.	19
Video screen display freezes.	**The Still function is set to on.** Press the Still button to restore the screen to normal.	19
Pictures appear dark.	**The lamp is approaching the end of its product lifetime.** Replace the lamp.	32
Pictures appear blurry.	**The focus is not properly adjusted.** Adjust the focus using the focus ring.	17
	The lens is dirty or misty. Clean the lens referring to the section “Caring for the lens”.	–
No remote function	**No battery** Before use the remote control, please check battery of remote controller.	12
	Remote signal be obstructed Remove obstacle between projector and remote controller	13
Colors are pale	**Color density and color matching are not correctly adjusted.** Adjust the RGB setting.	–
	Color lose. Caused by poor VGA cable connection.	–

NOTE ► Although bright spots or dark spots may appear on the screen, this is a unique characteristic of liquid crystal displays, and it does not constitute or imply a machine defect.

List of Supported Monitor Displays

Computer mode		
Signal	Refresh Rate(Hz)	Resolution(dots)
VGA	60	640X480
VESA	60/72/75/85	640X480
SVGA	56/60/72/75/85	800X600
XGA	60/70/75/85	1024X768
SXGA	70/75	1152X864
SXGA	60/75	1280X960
SXGA	60	1280X1024
WXGA	60/75	1280 x 800
WXGA＋	60/75/85	1440 x 900
SXGA＋	60/75	1400 x 1050
UXGA	60	1600 x 1200
WSXGA＋	60	1680 x 1050
WUXGA	60	1920 x 1200
MAC	67	1280X1024 / 640x480
MAC	75	832x624
MAC	75	1024x768
MAC	75	1152x870
Component(YPbPr)		
Signal	Refresh Rate(Hz)	Resolution(dots)
SDTV(480i)	30	720X480
SDTV(480p)	60	720X480
HDTV(720p)	60	1280X720
HDTV(1080i)	30	1920x1080
Composite/S-Video		
Signal	Refresh Rate(Hz)	Resolution(dots)
TV(NTSC)	60	720X480
TV(PAL,SECAM)	50	720X576

Ceiling Mounted Installation Guide

Attach the optional ceiling mount at four-suspension bracket fixing points when suspending from a ceiling.
A special method of installation is required in order to suspend the projector from the ceiling. Please ask your dealer for more details.

Dimensions

Unit:mm
Screw Holes of Ceiling Mount
Screw : M4
Depth : 10 mm

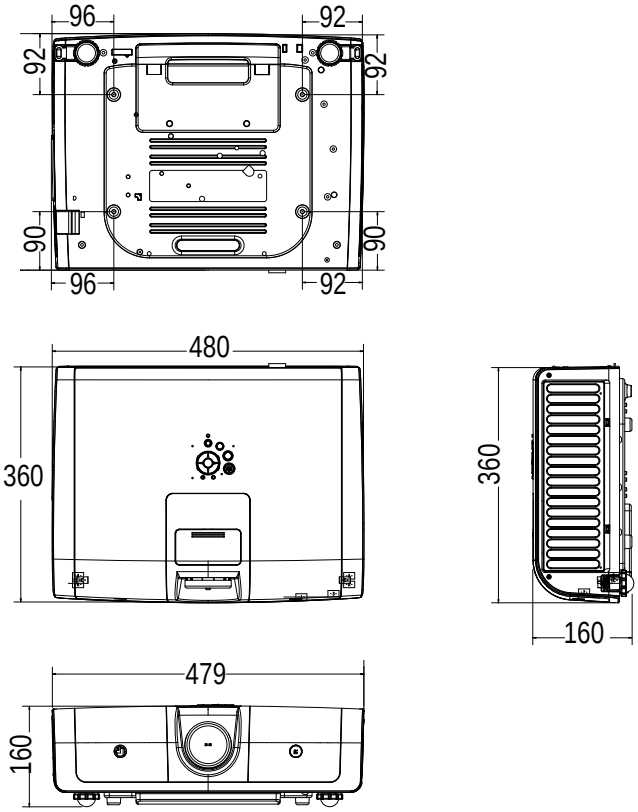

NOTE ► Please use only with UL Listed ceiling mount bracket.

PIN Code Number Memo

Write down the PIN code number in the column below and keep it with this manual securely. If you forgot or lost the number and unable to operate the projector, contact the service station.

PIN Code Lock No.

Factory default set No: 0 0 0 0*

Logo PIN Code Lock No.

Factory default set No: 0 0 0 0*

*Should the four-digit number be changed, the factory set number will be invalid.