USA's primary source for projector lamps

myprojectorlamps

PROJECTOR OWNER'S MANUAL

Boxlight

MP60E

Need a replacement lamp for this projector?

www.myprojectorlamps.com

Original manufacturer manual, provided unmodified as a courtesy of MyProjectorLamps.com.
All trademarks belong to their respective owners.

USER'S GUIDE

BOXLIGHT MP60e/63e

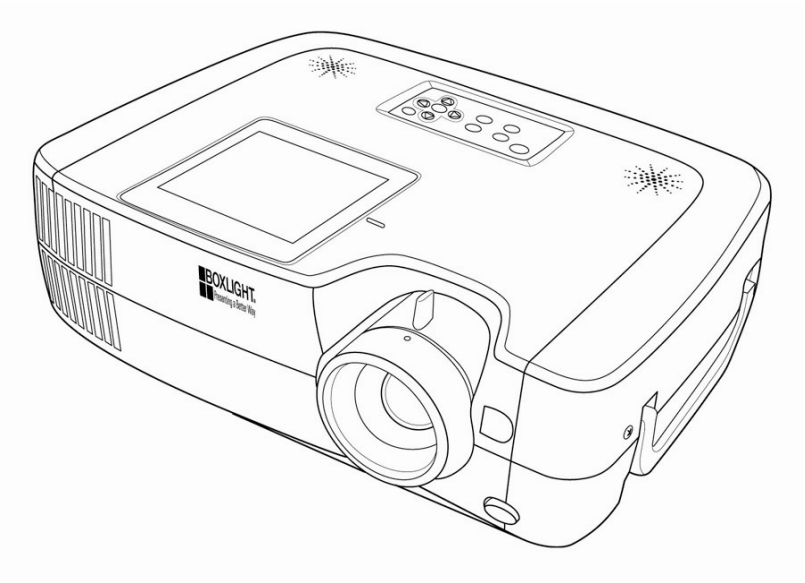

BOXLIGHT®
Presenting a Better Way

About the User’s Manual

Thank you for purchasing the MP60e/63e Projector. Please read this user's manual thoroughly to ensure correct usage of the projector and its features. After reading, store this instruction manual in a safe place for future reference.

Features

* Brilliant 3000/3600 ANSI Lumens
*2-Way (horizontal & vertical) keystone function
*True XGA, VGA~SXGA compatible
*HDTV 1080i/720p ready, progressive scan support
*PIP/PIG function
*RS-232 cable control
*Auto Ceiling Mount Detection

The content of this manual is subject to change without prior notice

All rights reserved.

Issue of edition 03.09_01

About the symbols

Various symbols are used in this instruction manual and on the product itself to ensure correct usage, to prevent danger to users and others, and to prevent property damage. The meanings of these symbols are described below. It is important that you read these warnings thoroughly and fully understand the contents.

Warning This symbol indicates information that, if ignored, could possibly result in personal injury or even death.

Caution This symbol indicates information that, if ignored, could result in personal injury or physical damage.

Typical Symbols

This symbol indicates an additional warning (including cautions). An illustration is provided to clarify the contents (for example, the illustration to the left indicates danger of electrical shock).

This symbol indicates a prohibited action. The contents will be clearly indicated in an illustration or description near the symbol (for example, the symbol to the left shows that disassembly is prohibited).

This symbol indicates a compulsory action. The contents will be clearly indicated in an illustration or description near the symbol (for example, the symbol to to the left shows that the power plug should be disconnected from the power outlet).

Warning

***If a problem should occur.**

• If smoke or a strange odors arise, continued use could result in fire or electrical shock. In such case, immediately turn off the power switch and disconnect the power plug from the power outlet. After making sure that the smoke or odor has stopped, contact your dealer for repairs. Never attempt to make repairs yourself because this is dangerous.

• Do not use this projector if there is no image or sound, or if the sound is distorted. Continued use could result in fire or electrical shock.In such case, immediately turn off the power switch, disconnect the power plug from the power outlet and contact your dealer.

• If the projector is exposed to water, immediately turn off the power switch, disconnect the power plug from the power outlet and contact your dealer

***Do not install on an unstable surface.**

Do not install this projector on an unstable surface such as a wobbly stand or incline because this could result in the projector falling and causing injury.

***Do not open the cabinet.**

Never open the cabinet.There is high voltage inside which can cause electrical shock. Contact your dealer for internal inspection, adjustment and repair.

***Do not modify.**

Do not modify this projector because this could result in fire or electrical shock.

***Do not use in the bathroom**.

Do not use this projector in the bathroom because this could result in fire or electrical shock.

***Do not insert objects into the projector.**

• Do not insert anything througnh the ventilation openings, etc., of this projector or drop anything inside, this could result in fire or electrical shock.

• **If a foreign object should enter this projector, immediately turn off the power switch, disconnect the power plug from the power outlet and contact your dealer.**

• Continued use could result in fire or electrical shock. Use special caution in households where children are present.

Warning

***Do not look through the lens when the lamp is on.**

Never look through the lens when the lamp is on. The powerful light could adversely affect vision. Use special caution in households where children are present.

***Avoid shock or impact on the projector.**

• If the projector should fall resulting in damage to the cabinet, immediately turn off the power switch, disconnect the power plug from the power outlet and contact your dealer.

• Continued use could result in fire or electrical shock.

***Do not place this projector in a container containing liquid.Do not place flower vases, flower pots, cups, cosmetics, liquids such as water, etc., on top of this projector.**

***Do not use any power cables except those supplid with the projector.**

The use of any other power cable could result in fire or electrical shock.

***Do not shine the laser beam onto yourself or others..**

• The laser pointer function of projector remote control emits a class II laser beam.

• Do not look directly into the laser beam outlet or direct the laser beam at other people. Vision can be impaired if the laser beam is shined into the eyes. Use special care if children are present.

***High temperatures are generated when the lamp is lit, do not place objects in front of the lens.**

Caution

Placing heavy objects on top of this projector could result in loss of balance or falling and cause personal injury or damage the projector.

***Do not block the ventilation openings.**

***Do not block the ventilation openings of this projector.** Blocking ventilation could lead to internal overheating which will reduce lamp life and could result in fire.

• Do not place this projector on its side during use or place it in a poorly ventilated location. Do not place this projector on carpet or bedding or cover it with a table cloth, etc. When installing the projector, make sure there is at least 30cm(12 in) clearance around the projector.

***Care and maintenance.**

For safety purposes, disconnect the power plug from the power outlet before performing any care or maintenance o the projector.

***Battery usage.**

• **Replace the batteries with the same type only.** Do not mix old and new batteries , this could result in fire or personal injury due to battery cracking or leakage.

• **Make sure the plus and minus terminals are correctly aligned when loading the batteries.**

• Incorrect loading could result in personal injury or contamination of the surroundings due to battery cracking or leakage.

***Have the projector interior cleaned every two years. Contact your dealer or Boxlight Technical Support to arrange for this service.** Accumulations of dust inside the projector can result in fire or malfunction if not cleaned for an extended period.

*Ask your dealer for details about internal cleaning.

Caution

***Avoid installation in humid or dusty locations.**

Do not install this projector in a humid or dusty location. This could result in fire or electrical shock.

***Do not handle the power cord roughly.**

• **Keep the power cord away from heaters,** the heat could melt the power cord and cause fire or electrical shock.

• **Do not touch the power plug with wet hands,** this could result in electrical shock.

• **When disconnecting the power plug, do not pull on the power cord.** This could damage the power cord and cause fire or electrical shock.

Always grip the plug when disconnecting.

***When the projector is not to be used for an extended period.**

If the projector is not to be used for an extended period because of travel, etc., disconnect the power plug from the power outletnd replace lens cover

Location of product safety labels

*Safety labels are used on or within the projector to alert you to items or areas requiring your attention.

CAUTION High temperature. Do not replace the lamp for at least 1 hour after power off. **VORSICHT** Hohe temperatur. Um die lampe auszutauschen, mindestens 1 stunde nach abschalten des hauptstromes warten. **ATTENZIONE** Temperatura elevata. Lasciare passare almeno 1 ora dopo aver spento l'alimentazione principale prima di sostituire la lampada. **ATTENTION** Température élevée. Attendre 1 heure après avoir coupé l'alimentation principale avant de remplacerr la lampe. **PRECAUCIÓN** Alta temperatura. No reemmplace la lámpara hasta por lo menos 1 hora después de haber desconectado la alimentación de corriente al aparato.	**CAUTION** Turn off power before opening this lamp cover. Replace with same type lamp rated. **VORSICHT** Schalten sie vor dem offnen dieser lampenabdeckung den hauptstrom aus. Ersetzen sie die lampe durch den gleichen typ. **ATTENZIONE** Spegnere l'alimentazione principale prima di aprire questo coperchio della lampada. Sostituire con una lampada con gli stessi valon nominali. **ATTENTION** Couper l'alimentation principale avant d'ouvir le couvercle de la lampe. Remplacer avec une lampe du même type. **PRECAUCIÓN** Desconecte la alimentacion de corriente al aparato antes de abrir la tapa de la lámpara. Reemplace la lámpara por una del mismo tipo.	**CAUTION** High-pressure lamp may explode if improperly handled. **VORSICHT** Die hochdrucklampe kann bei falscher handhabung explodieren **ATTENZIONE** Lampada ad alta pressione, puo esplodere se trattata erroneamente. **ATTENTION** La lampe à haute pression peut exploser si elle est manipulée incorrectement. **PRECAUCIÓN** La lámpara de alta presión podria explotar debido a una manipulación inadecuado.

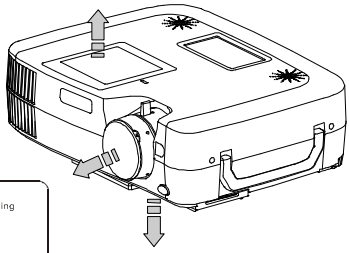

CAUTION
Do not look into the lens during operation.

VORSICHT
Beim betrieb nicht in die linse sehen.

ATTENZIONE
Non guardare nell'obiettivo durante il funzionamento.

ATTENTION
Ne pas regarder dans l'objectif pendant le fonctionnement de l'appareil

PRECAUCIÓN
No more el objectivo durante la operación

BOXLIGHT

BOXLIGHT Corp.
LCD Projector
Model: MP-63e
INPUT
100-240V~,50/60Hz,4A

Serial No.:

LISTED
I.T.E
US E237061

Tested To Comply
With FCC Standards
FOR HOME OR OFFICE USE

Checking the Package Contents

☐ Projector with Lens cover

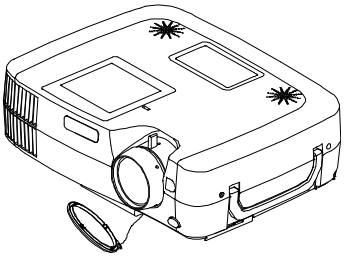

☐ Remote Control

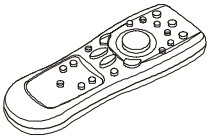

☐ 2AAA Batteries

☐ Power Cord

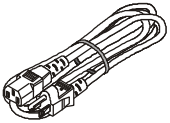

☐ S-Video Cable

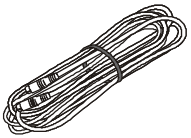

☐ Audio/Video Cable

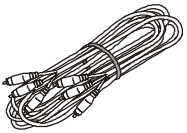

☐ Computer cable

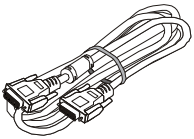

☐ Phone Jack

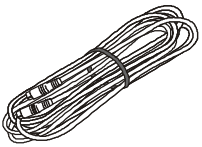

☐ USB Mouse Cable

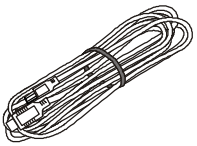

☐ Filter Sponge

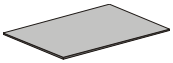

☐ User Manual

Table of Contents

Safety Instructions ..8

Checking the package content ..9

Before Use

Names and Function of Each Part

Main Unit ..12

Keypad control ..14

Rear View / IO Board ..16

Bottom View ..18

Remote Controller ..19

Inserting the batteries ..20

Installation

Setting Up the Projector ..21

Screen Size and Projection Distance ..23

Adjusters the Image Position ..24

Moving the projector ..25

How to connect

Desktop PC ..26

Laptop PC ..27

External Speaker ..29

USB Mouse ..30

Video ..31

Basic Operation

Turning on the projector ..33
Adjusting the image ..35
Turning off the power ..36

Function of Menu(OSD)

Computer Mode ..38
Video Mode ..45

Maintenance and Troubleshooting

Cleaning the projector ..51
Cleaning the lens ..51
Cleaning Air Filter ..52
Replacing the Projection Lamp ..53
Indicators ..54

List of Support Display Modes ..55

Specification ..56

Names and Function of Each part

Main Unit

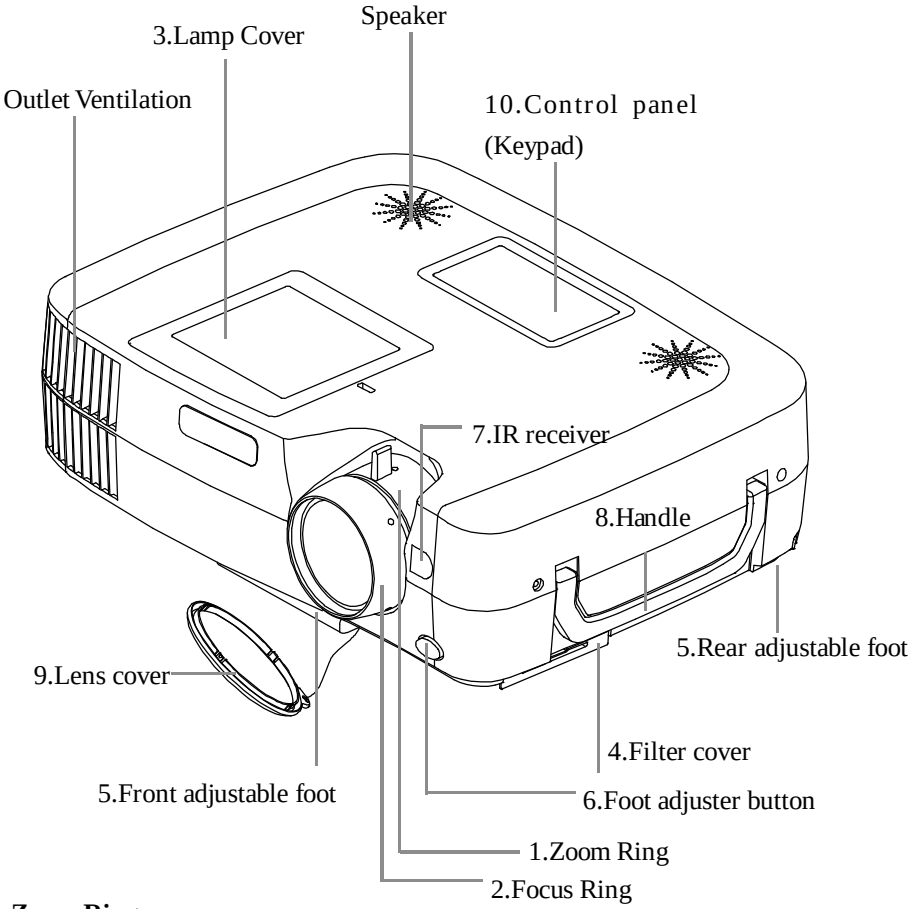

1.**Zoom Ring**

Use the Zoom Ring to adjust the size of the projected image.

Rotate the Zoom Ring until the image is the desired size.

2.**Focus Ring**

Use the Focus Ring to focus the projected image.

Rotate the Focus Ring until the image is clear.

3.**Lamp cover**

Remove the Lamp cover to replace the old lamp.

⚠ ***CAUTION***

Allow the lamp to cool for 1 hour prior to replacing the lamp.

Turn off power before opening this lamp cover. Replace with same type lamp rated.

4.**Filter cover**

Prevents dust and other foreign particles from being drawn into projector.

Remove the Filter cover to clean the air filter.

5.**Front / Rear adjustable foot**

Extend and retract to adjust the projection angle

6.**Foot adjuster button**

Lock/unlock the adjustable foot.

7.**IR receiver**

When using the remote control, point the remote control at this sensor

8.**Projector handle**

Holding the projector when lifting and transporting.

9.**Lens cover**

Attach when not using to protect the lens from becoming dirty or damaged

10.**Control panel (key pads)**

Operating system.

Keypad control

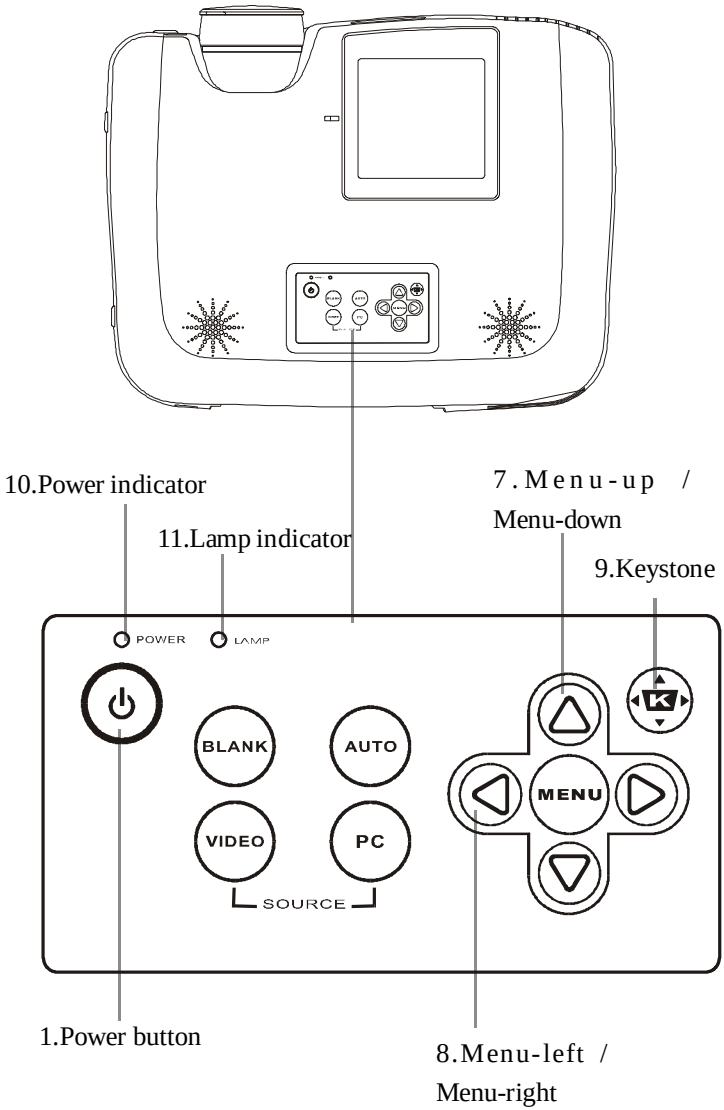

1.**Power button**

Power on / operation mode, Standby mode, Cooling-down mode

2.**Computer source**

Selects between RGB input sources — Computer1, Computer2/RGB (Computer 2/YPbPr), DVI

3.**Video source**

Select between Video input source – Composite Video, S-Video,, Component Video (YCbCr)

4. **Blank**

Blanks the projected image. If the projector is left in Blank mode for more than 15 minutes, the projector will automatically shut off the lamp and enter cool-down mode.

5.**Auto**

Automatically adjusts the settings to match the current input.

6.**Menu**

Displays or hides the OSD main menu page.

7.**Menu-up / Menu-down**

Used to navigate through the OSD menus.

8.**Menu-right / Menu-left**

Used to select and adjust OSD menu functions.

9.**Keystone**

Adjusts the vertical keystone with menu-right, menu-left

10.**Power indicator**

Lights or flashes to indicate the operating status of the projector(see page 54)

11.**Lamp indicator**

Indicates the projector is in cool down mode, the internal temperature is too high, or there is a problem with the lamp cover (see page54)

Rear View / IO Board

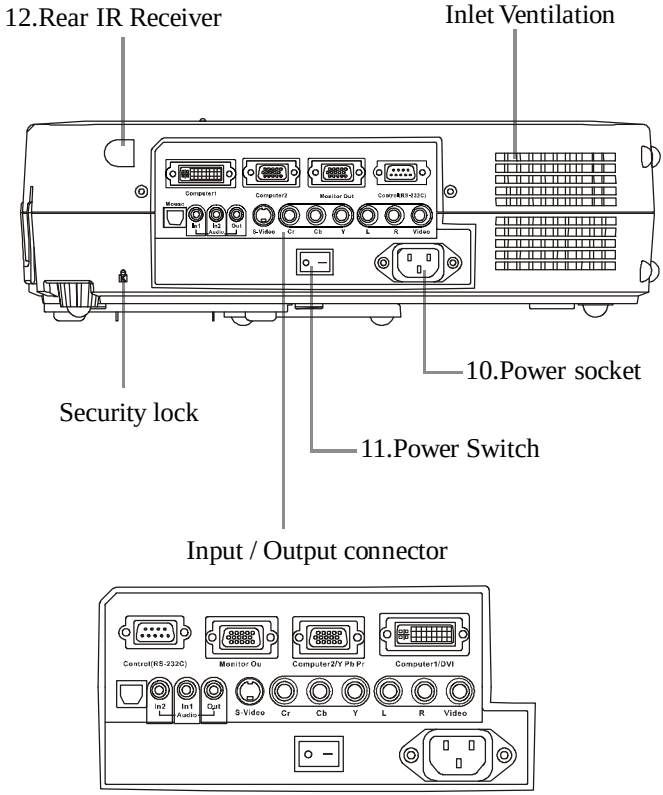

1.**Computer1/ DVI connector**

Analog / Digital RGB input signal from a computer

2.**Computer2 / RGB IN and Y Pb Pr (Component video) connector**

Analog RGB signal from a computer or Component Video (YPbPr) signal from a video source .

3.**Monitor out connector**

Connect an external monitor to this connection to view the Computer 2 input.

4.**RS-232 connector**

Serial data port for controlling the projector with a computer or other RS-232 control device.

5. **Audio in 1 / Audio in 2 connector**

Stereo mini jack for PC audio input

6.**Audio out connector**

Connect to an external speaker system.

7.**Video/Audio connector**

Composite video signal from a video source.

There is also R&L RCA Jacks for Audio input.

8.**Component video connector(Y Cb Cr)**

Component video (Y Cb Cr) signal from a video source.

9.**USB mouse connector**

Connect a USB mouse cable to the computer to control computer mouse functions with

10.**Power inlet**

Connect the power cord to this connection

11.**Power switch**

Turns the projector power on /off .

12.**Rear IR receiver**

When using the remote control, point the remote control at this sensor.

Bottom View

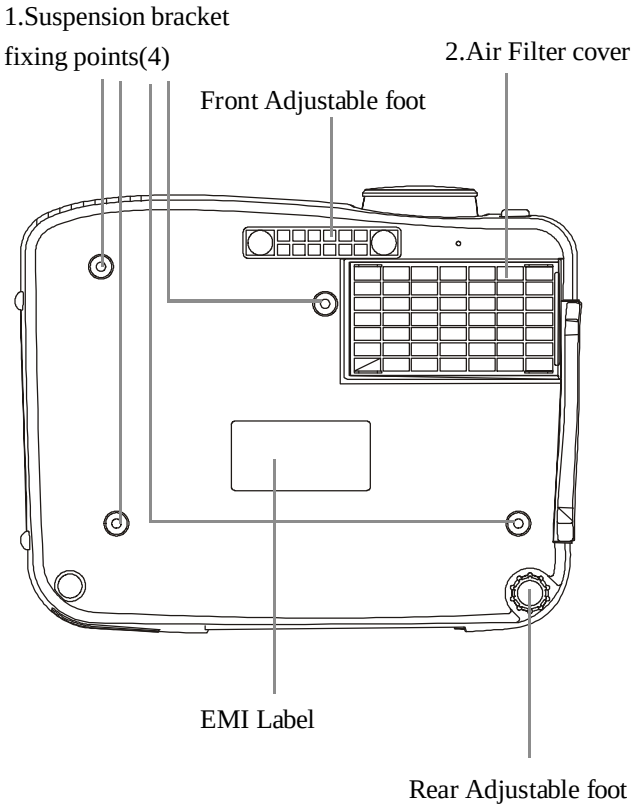

1.Suspension bracket fixing points(4 points)

Install the optional ceiling mount here when suspending the projector from the ceiling.

2.Air filter

Prevents dust and other foregin particles from being drawn into the projector.

Remote Control

1.**Power**
Power on / operation mode, Standby mode, Cooling-down mode

2.**Laser pointer**
Press and hold to turn on the laser pointer.

3.**Mouse Left**
Left mouse click.

4.**Mouse Right**
Right mouse click.

8.**Keystone up /down**
Adjusts the horizontal key-stone function

6.**Menu-up / Menu-down**
Navigates up/down through the OSD menu.

5.**Menu**
Displays or hides the OSD main menu page.

7.**Menu-right / Menu-left**
Selects and adjusts OSD menu functions.

10.**Computer source**
Selects between RGB input source — computer1,com-puter2/RGB,computer2/ YPbPr,DVI

9.**Volume up / down**
Sound louder or softer

16.**Mute**
Mute audio

11.**Video source**
Select between Video input source – Composite Video, S-Video, Y Cb Cr Video

17.**Zoom in / Zoom out**
Zoom in or zoom out

14.**Blank**
Hides the image, displays a blank, black screen.

13.**Pip**
Show picture in picture function.

12.**Auto Sync**
Optimizes the current image.

15.**Still**
Freezes the current image on the screen.

Inserting the batteries

Loading AAA batteries into the remote control.

1. Remove the battery cover.

Push the knob while lifting up the battery cover.

2. Loading the batteries.

Make sure the plus and minus poles are correctly oriented.

3. Close the battery cover.

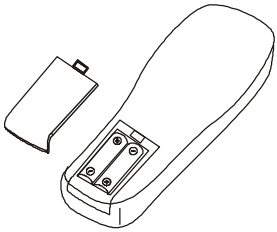

⚠ Caution

- *Avoid excessive heat and humidity.*
- *Do not drop the remote control.*
- *Do not expose the remote control to water or moisture, this could result in malfunction.*
- *When the remote control will not be used for an extended period, remove the batteries.*
- *Replace the batteries when the remote control becomse sluggish or unresponsive.*
- *Do not place the remote control close to the cooling fan of the projector.*
- *Do not disassemble the remote control. If the remote control needs service, contact your dealer or Boxlight Technical Support.*

⚠ Warning

The laser pointer function emits a class II laser beam. Do not look directly into the laser beam outlet or point the laser beam at other people. Vision can be impaired by shining the beam into the eyes.

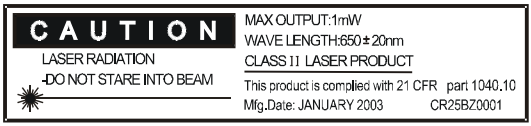

Installation

Setting Up the Projector

The projector supports the following four different projection methods

*** Front projection**

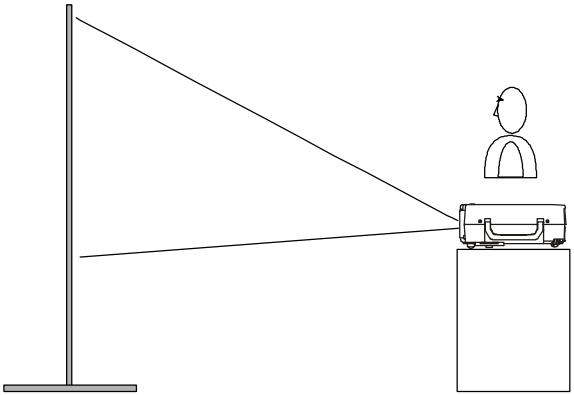

* Rear

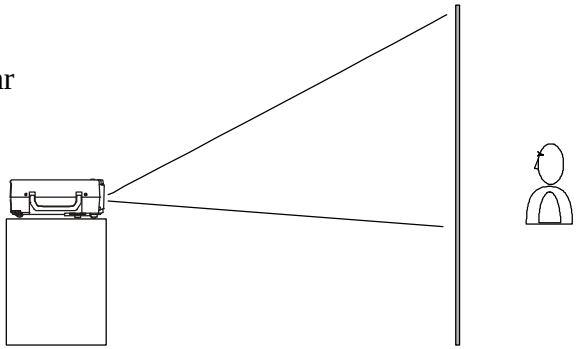

A special method of installion is required in order to suspend the projector from the ceiling. Please ask your dealer for details.

* Rear ceiling projection

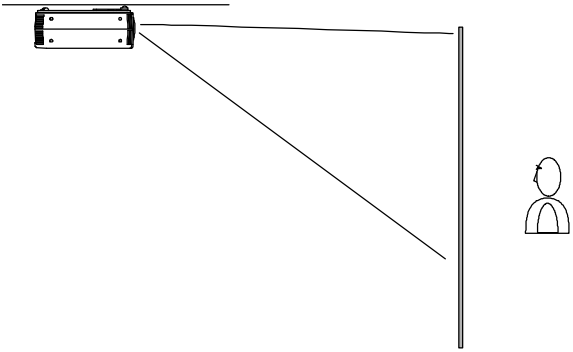

* Front ceiling projection

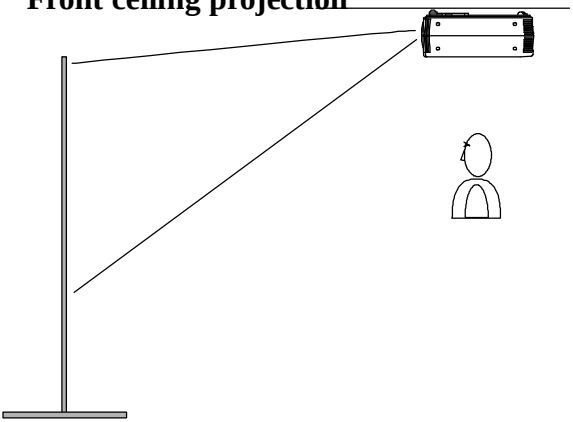

A special method of installion is require dinorder to suspend the projector from the ceiling. Please ask your dealer for details.

Screen Size and Projection Distance

The distance between the projector and screen determines the actual image size. Refer to the table below to determine the image size at a given distance.

Image Size (inch)	Distance(M)	
30	1.05	1.36
40	1.33	1.79
50	1.72	2.23
60	2.05	2.67
80	2.73	3.54
100	3.41	4.42
200	6.78	8.79
300	10.15	13.16

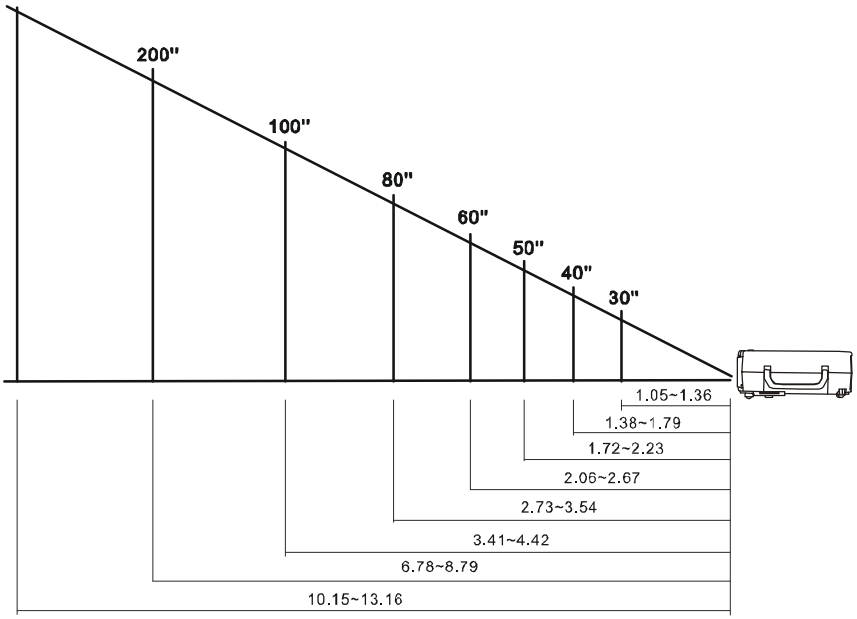

Adjusting the Image Position

Use the adjustable foot at the front of the projector to set the image height. Rotate the adjustable foot at the rear of the projector to fine tune the image position.

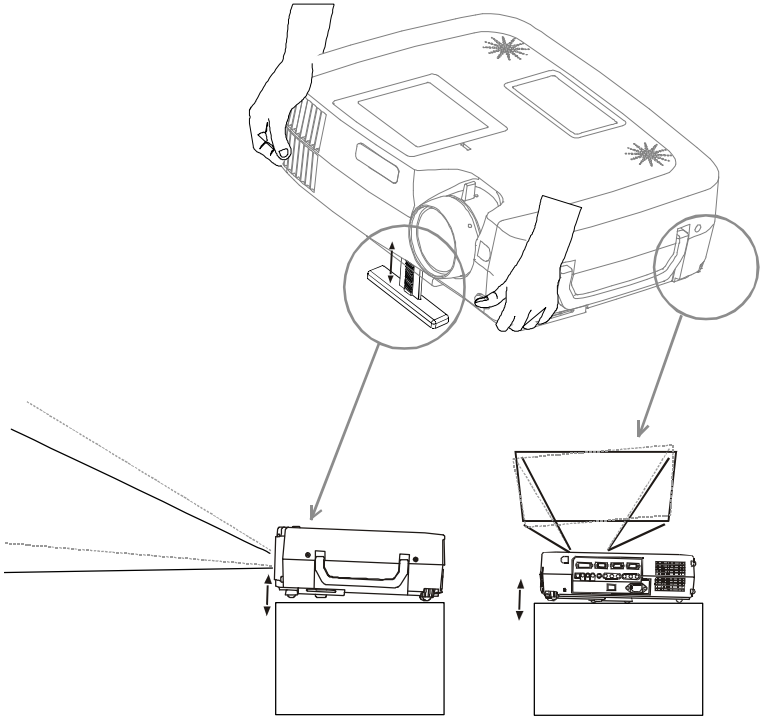

When the foot is adjusted, it may cause the shape of the projected image to become distorted. Use the keystone correction function to correct this distortion.

To retract the front adjustable foot, press the foot release button . The front adjustable foot will slowly retract in side the projector.

Moving the projector

1.Use the carrying handle when moving the projector.
2.Replace the lens cover and retract the front adjustable foot when moving the projector to prevent damage to the projector.

⚠ Caution

The optional carry bag is intended to protect the projector from dust and scratches on the surface of the cabinet. It is not designed to protect the projector from external shock. Do not transport the projector in this or any other unsuitable transport case when using a courier or transport service. This may cause damage to the projector.

Soft carrying bag

How to connect

Desktop PC

Before Starting, make sure that the projector and computer are both turned off.

1. Connect the computer cable.
   1.1 Connect either end of the computer cable to the projector's computer 2 / Y Pb Pr input port.
   1.2 Disconnect the monitor cable from the computer and connect the other end of the projector cable where the monitor cable was disconnected from the computer.
   1.3 If needed, connect the computer monitor cable to the projector's Computer out connection.
   1.4 Tighten all connectors.

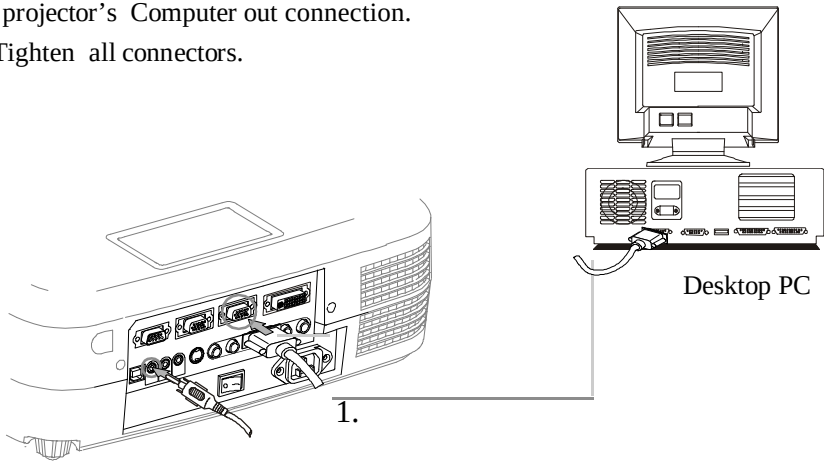

2.Connect the audio cable (optional).
   2.1 Connect one end of the audio cable to the Audio in 2 jack on the projector.

   2.2 Connect the other end of the audio cable to the audio output port on the computer sound card.

Laptop PC

Before beginning, make sure that the projector and computer are both turned off.

1. Connect the computer cable.

   1.1 Connect either end of the computer cable to the projector's computer 2 / Y Pb Pr input port.

   1.2 Connect the other end of the projector cable to the monitor out connection on the laptop.

   1.3 Tighten all connectors.

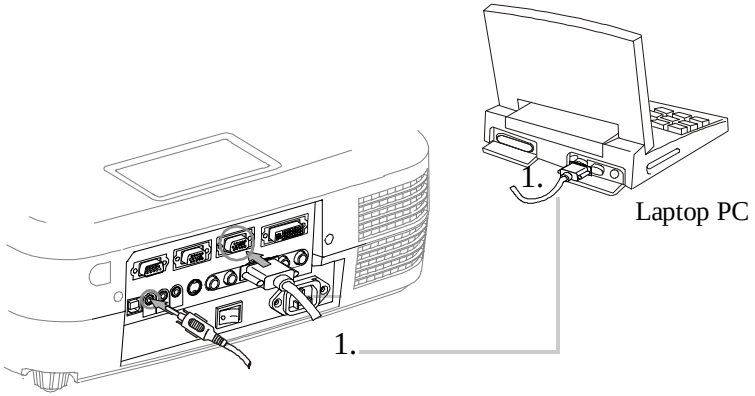

2.Connect the audio cable if necessary(optional).

   2.1 Connect one end of the audio cable to the Audio in 2 jack on the projector.

   2.2 Connect the other end of the audio cable to the audio output port on the laptop PC.

A PC desktop computer (**DVI-I** port)

Before beginning, make sure that the projector and computer are both turned off.

1. Connect the computer DVI cable.

   1.1Connect either end of the computer cable to the projector's computer 1 input port.

   1.2Disconnect the monitor cable from the computer and connect the other end of the computer cable where the monitor cable was disconnected from the computer.

   1.3Tighten all connectors.

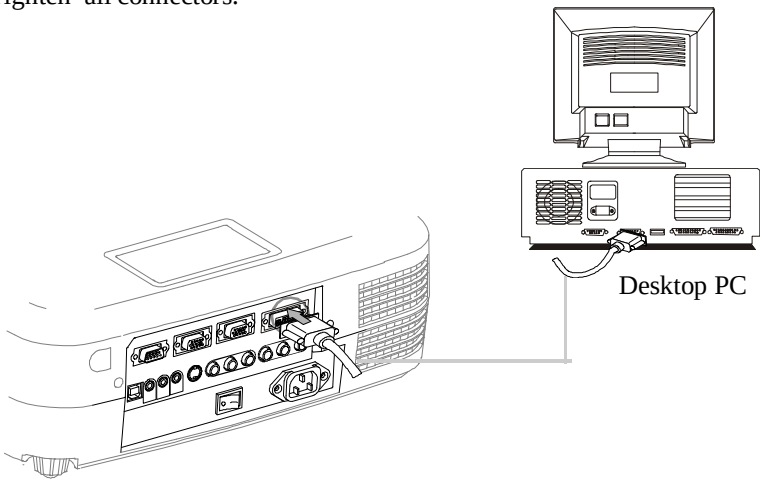

2.Connect the audio cable (optional).

   2.1 Connect one end of the audio cable to the Audio in 1 jack on the projector.

   2.2 Connect the other end of the audio cable to the audio output port on the computer .

External Speaker

1. Connect a 3.5mm stereo mini-plug from the external speaker system to the projector Audio out jack.

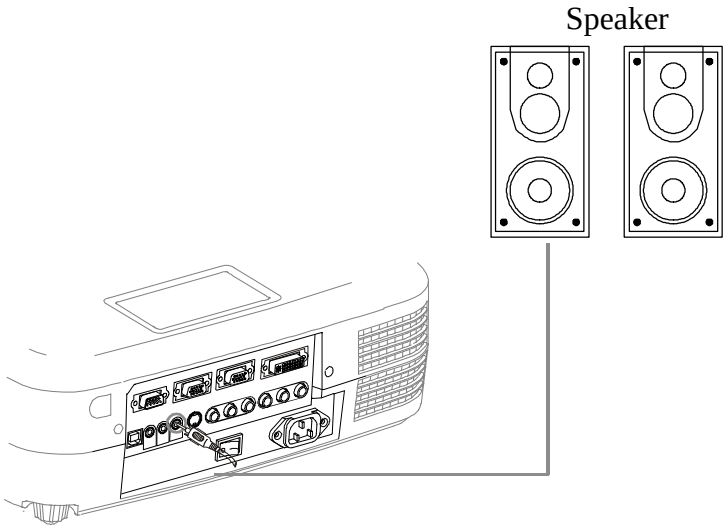

USB Mouse

USB mouse compatible MS-Window98/2000/NT/XP/Me, Macintosh :OS8.6~10.1, and a Microsoft Mouse driver must be installed.

1. Insert the end of the USB Cable (B-Type) to the projector's USB port.
2. Connect the end of the USB Cable (A-type) to the computer's USB port.
3. When the projector and computer are turned on, the appropriate drivers should load

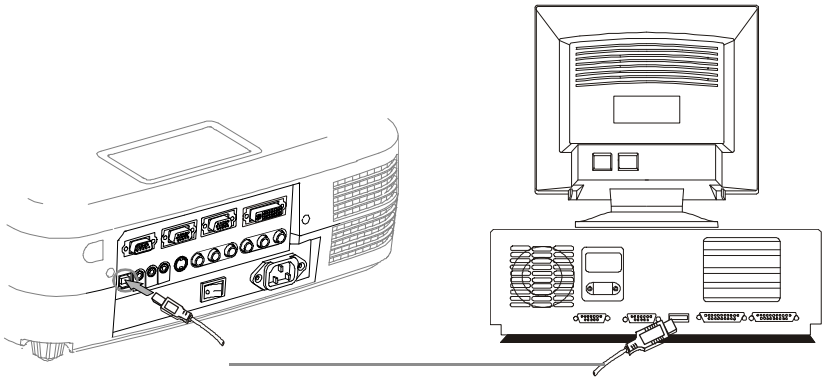

Video

A. Connecting to a video source

The Projector can receive composite Video/stereo-audio, S-Video or Component video (YCbCr) signals.

1.The composite video and stereo-audio inputs, are the yellow, white and red RCA connections on the projector. Connect the yellow RCA plug at one end of the video/stereo-audio cable to the yellow video jack. Connect the other yellow RCA plug to the video-out Jack on the video source.

2. The red and white connections are audio connections. To use the projector speakers connect the audio cable between the projector and the audio source as shown below.

2.1. Insert the white plug into the L-Jack and red plug into the R-Jack.

2.2. Connect the other end of the cable to the output jacks of the audio source.

3. For S-Video, insert one end of the S-Video cable into the projector's S-Video jack. Insert the other end into the S-Video out jack on your S-Video source.

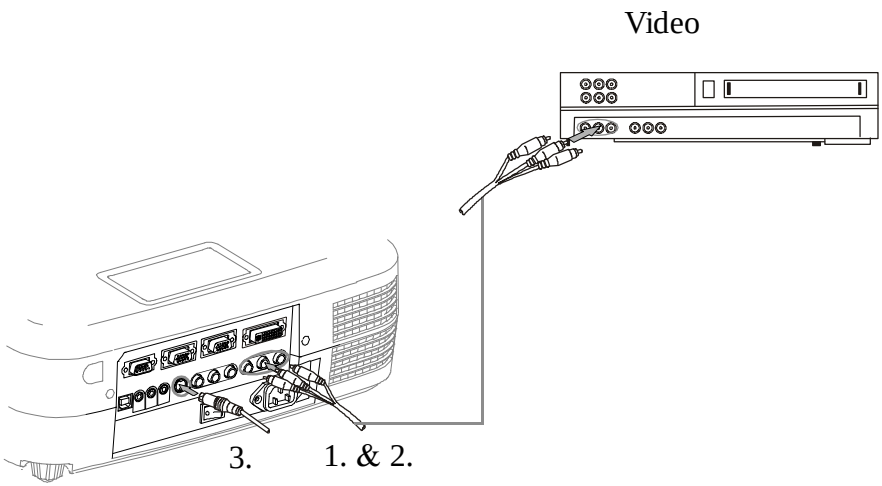

4. The Component video (Y Cb Cr) input uses the green, red, and blue RCA connections on the back of the projector. Connect the green RCA plug at one end of the component video cable to the projector's Y Jack (green connection). Connect the blue RCA plug at one end of the component video cable to the projector's Cb Jack (blue connection). Connect the red RCA plug at one end of the component video cable to the projector's Cr Jack (red connection).

Note : When using the S-Video or YCbCr inputs, connect the video/stereo-audio cable to the red and white R and L jacks on the projector:

Insert the red RCA plug to the right channel and white RCA plug to the left channel.

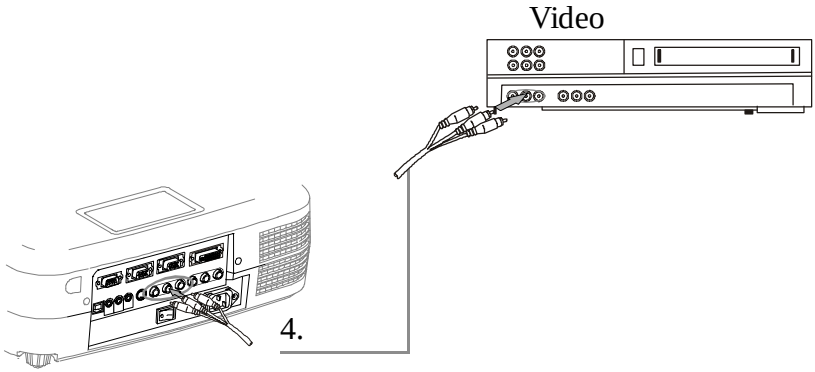

B. Connecting to a Component Video (RGB) source

The Projector can also receive Video(RGB) signals via the Computer2/YPbPr Connection.

1. Use the optional HD15/component video cable to connect the video source to the Computer 2/ YPbPr connector at the rear of the projector.

Note: When using the RGB Video input, connect the video/stereo-audio cable to the red and white R and L jacks on the projector:

Insert the red RCA plug to the right channel and white RCA plug to the left channel.

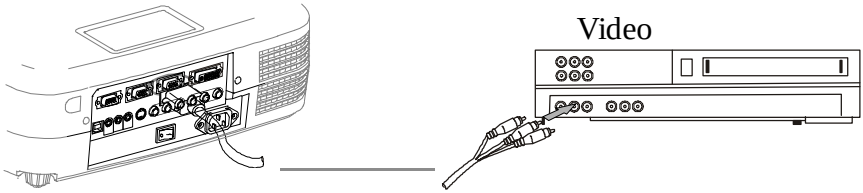

Basic Operation_

Turning on the projector

Procedure

1. Ensure the power switch is turned off and all external components are connected to the projector.

2. Remove the lens cover.

3. Connect the power cord to the projector.

4. Turn on the power switch.

5. Press the ⏻ button on the control panel or [POWER] button on the remote control.

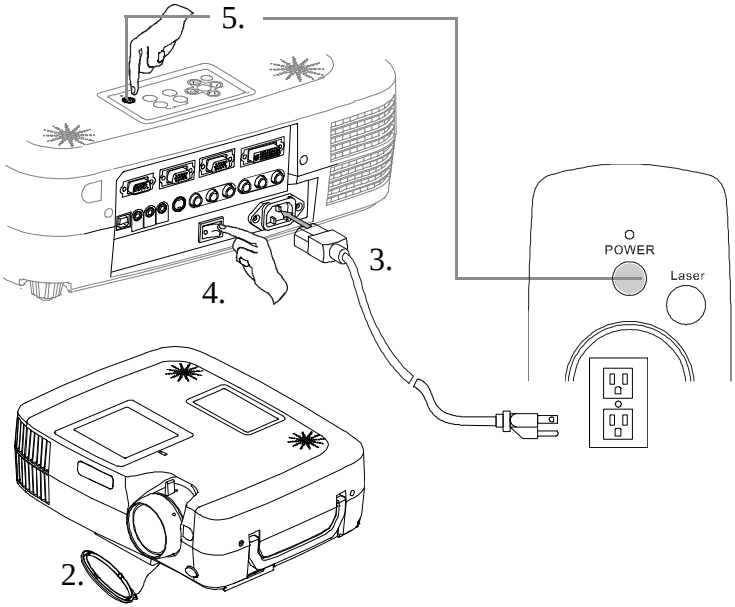

6. The power indicator will flash green .

7. Press the [VIDEO]/[PC] button on the control panel or the Computer/Video buttons on the remote control to select the appropriate source.

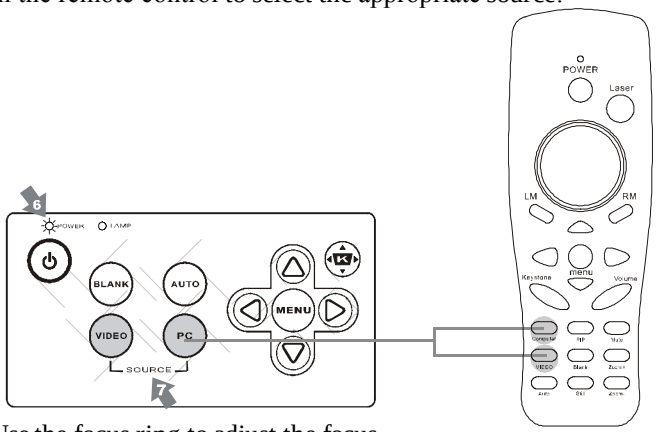

8.Use the focus ring to adjust the focus.

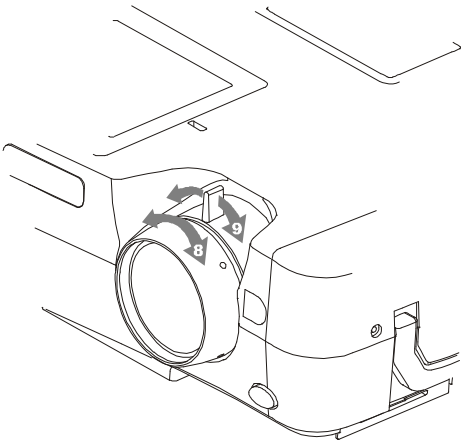

Adjust the Image

1.Adjusting the image size

Turn the zoom ring on the projector to adjust the size of the image. If

2.Adjusting the image height.

Extend or retract the front adjustable foot to adjust the height of the image.

3.Correcting Keystone Distortion

Use the [Keystone]button on the projector's control panel.

*Correcting vertical keystone distortion

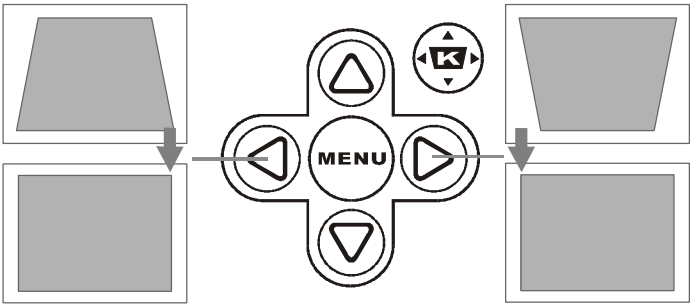

Turning off the projector

1. Press the power button on the projector or remote control. The power off confirmation message appears.If you do not want to power off the projector, ignore the message and it will disappear.

2. Press the power button again and the projector will enter cool-down mode. The lamp shuts off, the lamp indicator flashes red,and the fans contiune to run for approximately two minutes.During the cool down sequence the projector will not respond to any control panel or remote control buttons.

Caution: Do not set the power switch to off or unplug the projector during the cool-down sequence. Not allowing the lamp to cool properly will greatly reduce the life of the lamp.

3. After the cool-down sequence is complete the fans will shut off and the lamp indicator will stop flashing. The projector is now in standby mode and can be turned back on with the remote control or control panel. If the projector will not be used for an extended period, set the power switch to off and disconnect the power cord.

Functions of Menu(OSD)

Keypad Operating:

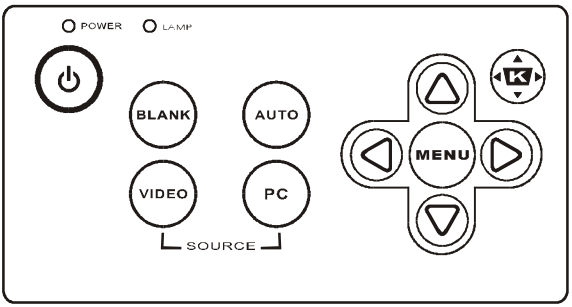

1. ⏻ : turn on and turn off the projector

2.BLANK : Blanks the projected image. If the projector is left in Blank mode for more than 15 minutes, the projector will automatically shut off the lamp and enter cool-down mode.

3.AUTO : Automatically adjusts the settings to match the current input.

4.SOURCE : Selects VIDEO or PC input source.

5.MENU : Enter or exit the main menu (Show and hide the OSD)

6.△▽ : Up / Down arrow buttons, used to navigate through the OSD Menus.

7.◁▷ :Right / Left arrow buttons, used to select and adjust OSD Menu functions.

8. : Adjusts the vertical keystone with the right and left arrow buttons.

Computer mode

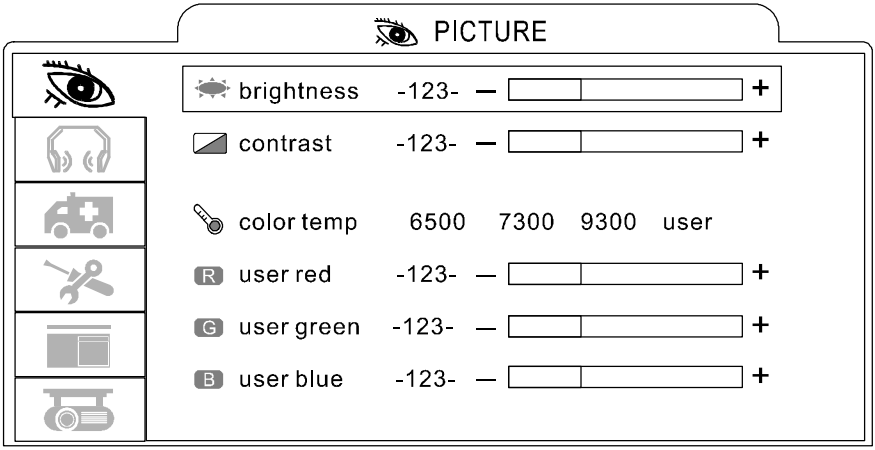

1. PICTURE		
brightness	-64/+63	adjusts the overall image brightness
contrast	-64/+63	adjusts the difference between light and dark areas of the image
color Temp		adjusts the color temperature of the image
	6500K 7300K 9300K User	sets color temperature to 6500K sets color temperature to 7300K sets color temperature to 9300K enables the seperate User color temperature adjustments of each RGB color
	User Red User Green User Blue	-128/+127 -128/+127 -128/+127

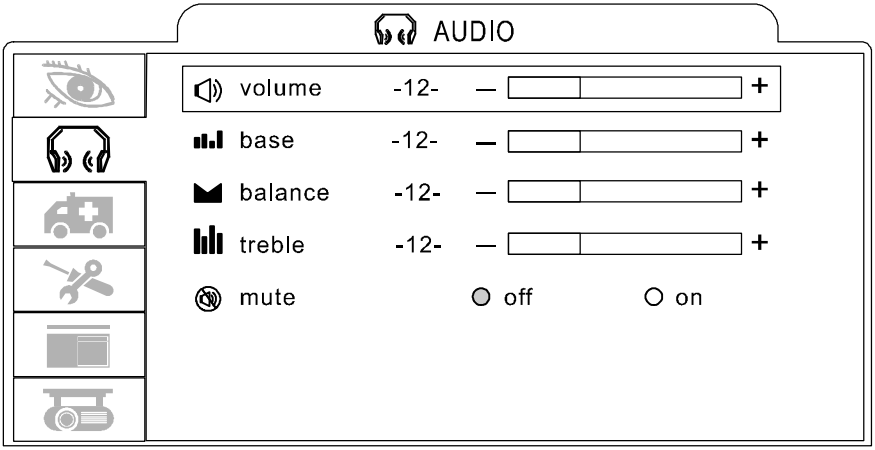

2. AUDIO		
volume	0/+31	adjusts the volume
base	-8/+7	adjusts the base tone
balance	-31/+31	adjusts the balance setting
treble	-8/+7	adjusts the treble tone
mute	On/Off	mutes the volume on / off

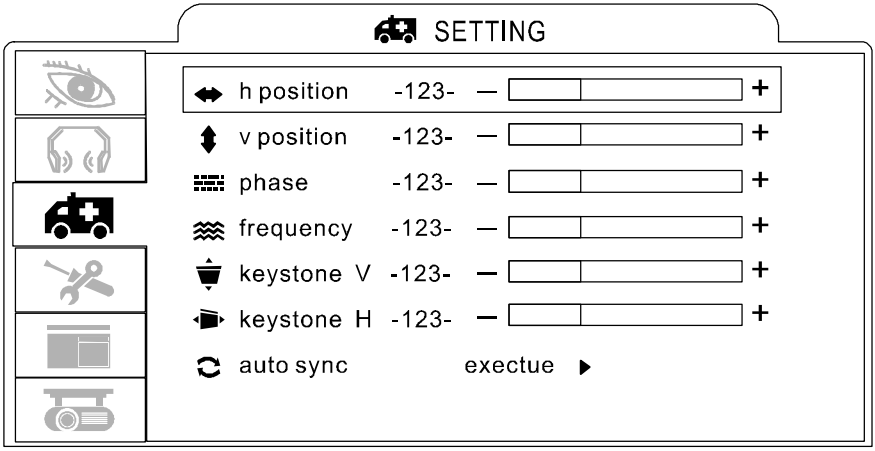

3. SETTING		
h position	-128/+127	move the image position horizontally
v position	-128/+127	move the image position vertically
phase	-128/+127	sets the synchornization polarity
frequency	1294/1394	sets the horizontal scanning frequency
keystone V	-128/+127	corrects vertical keystone distortion in image
keystone H	-128/+127	corrects horizontal keystone distortion in image
auto sync	execute	sets all of the above settings automatically

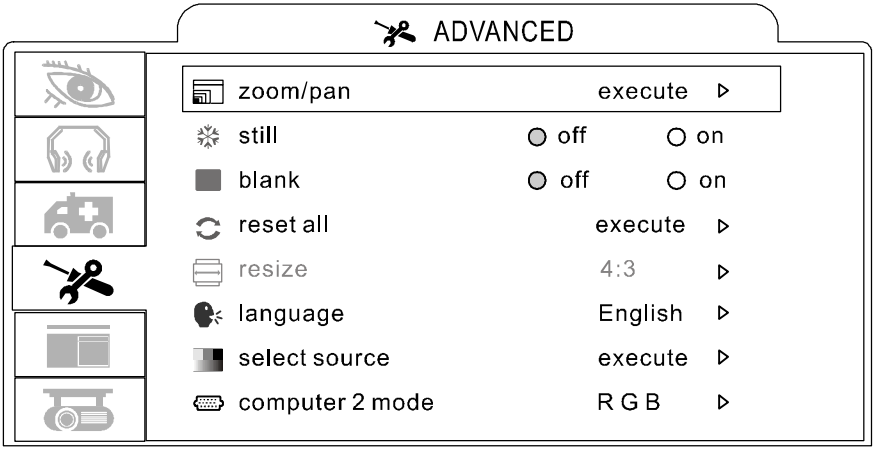
ADVANCED
zoom/pan
execute
still
off
on
blank
off
on
reset all
execute
resize
4:3
language
English
select source
execute
computer 2 mode
R G B

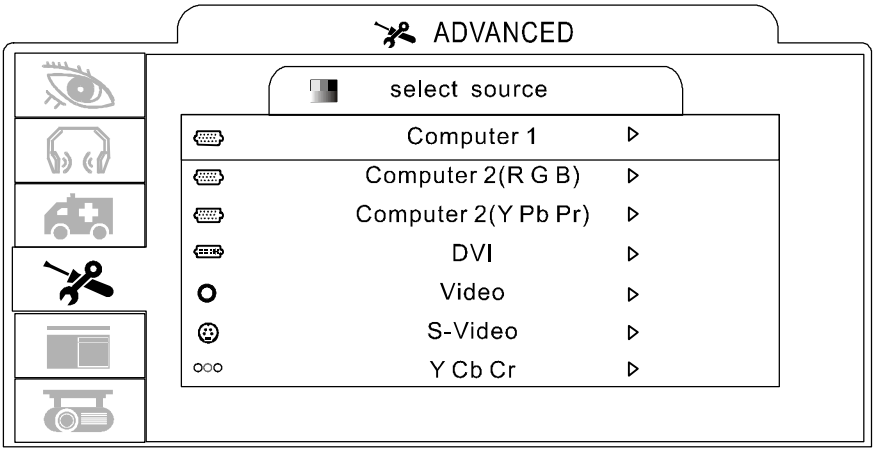
ADVANCED
select source
Computer 1
Computer 2(R G B)
Computer 2(Y Pb Pr)
DVI
Video
S-Video
Y Cb Cr

4. ADVANCED		
zoom/pan	execute	temporarily enlarge a portion of the image and view portions of the image that are not visible in the display area
still	on / off	freezes the current image on the screen
blank	on / off	Hides the image, displays a blank, black screen * (see below)
reset all	execute	resets all OSD Menu functions to their factory default values *(see below)
language	Eng	select the language that the OSD Menu and on screen massage are displayed in English/Chinese(s)/ Chinese(t)/Italian/Spanish/French/German
select source		select the input source from:
		computer1 / computer2(RGB) / computer2(YPbPr) / DVI / video / s-video / Y Cb Cr
Computer2 mode	RGB/ YPbPr	Switches computer2 input:RGB /Y Pb Pr

*Blank on

If the projector is left in Blank mode for more than 15 minutes, the projector will automatically shut off the lamp and enter cool-down mode.

*Reset all

1. After you select [reset all] on the OSD menu, the following confirmation message will appear on the screen.

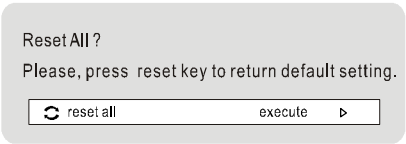

2. Press reset button on the remote control or the button on the keypad to reset the OSD Menu values. Press the ESC button or ignore the message to exit the Reset All fuction without changing any settings.

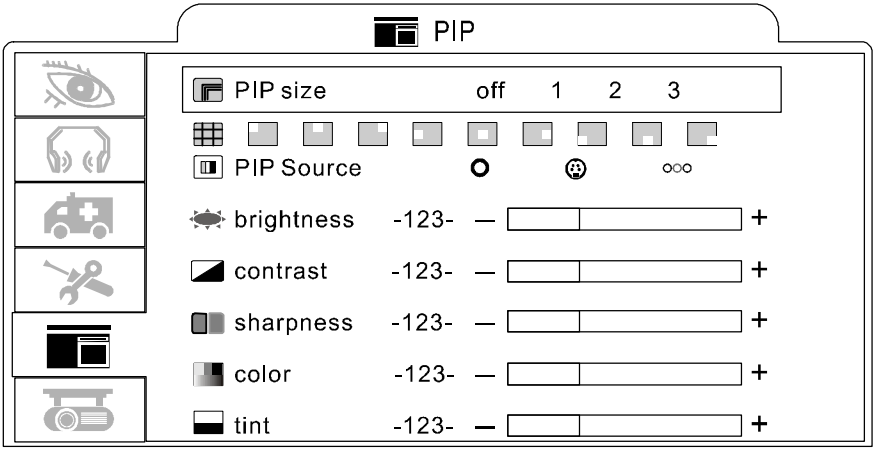

5. PIP (Picture In Picture)		
PIP size	off 1 2 3	sets the PIP image size
PIP position	9-position	moves the PIP image postion
PIP source	c, s , YCbCr	selects the PIP input source
PIP brightness	-64/+63	adjusts the brightness of the PIP image
PIP contrast	-64/+63	adjusts the difference between light and dark areas of the PIP image
PIP sharpness	-128/+127	adjusts the image sharpness of the PIP image
PIP color	-128/+127	adjusts the color intensity of the PIP image
PIP tint	-128/+127	adjusts the tint of the PIP image

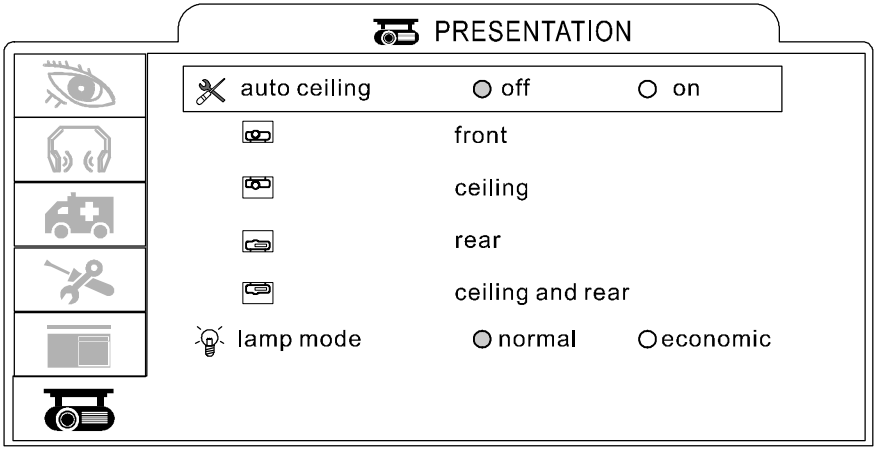

6. PRESENTATION		
auto ceiling	on / off	automatically inverts the image when the projector is turned upside down i.e. when the projector is mounted on the ceiling
front	execute	normal projection mode
ceiling	execute	inverts the image vertically, used when the projector is mounted upside down
rear	execute	inverts the image horizontally, used when projecting onto a rear projection screen
ceiling and rear	execute	inverts the image horizontally and vertically, used when the projector is mounted upside down and projecting onto a rear projection screen
lamp mode	normal economic	economic mode reduces the lamp brightness to extend lamp life and quiet the projector

Video Mode_

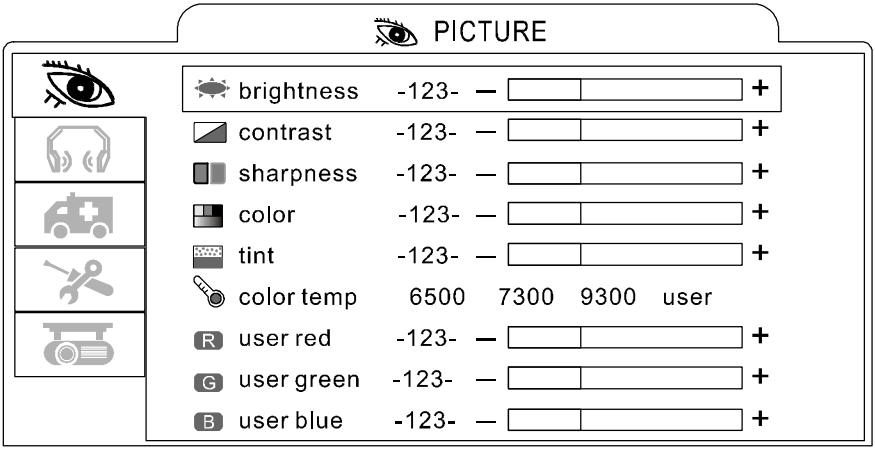

1. PICTURE		
brightness	-64/+63	Adjusts the image brightness
contrast	-64/+63	Adjusts the difference between light and dark areas of the image
sharpness	-128/+127	Adjusts the image sharpness
color	-64/+63	Adjusts the image color
tint	-64/+63	Adjusts the image tint
color temp		Adjusts the color temperature
	6500K 7300K 9300K User	Sets the color temperature to 6500K Sets the color temperature to 7300K Sets the color temperature to 9300K Enables the separate User Color temperature adjustment of each RGB color
	User Red User Green User Blue	-128/+127 -128/+127 -128/+127

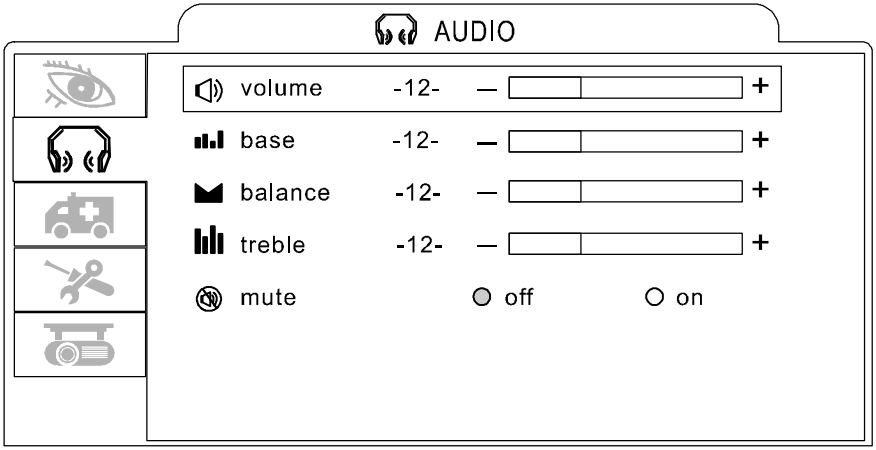

2. AUDIO		
volume	0/63	Adjusts the volume
base	-8/+7	Adjusts the base tone
balance	-31/+31	Adjusts the balance setting
treble	-8/+7	Adjusts the treble tone
mute	On/Off	Mutes the volume

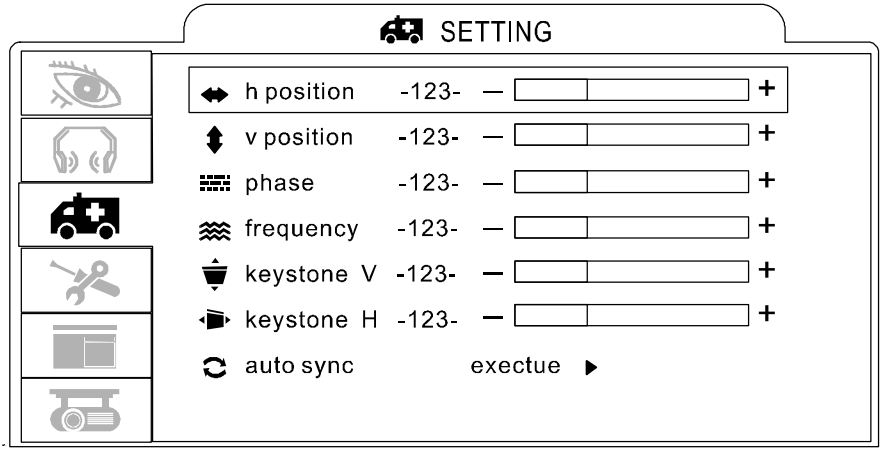

3. SETTING		
H Position	-128/+127	Unavailable in Video Mode
V Position	-128/+127	Unavailable in Video Mode
Phase	-128/+127	Unavailable in Video Mode
Frequency	1294/1394	Unavailable in Video Mode
Keystone V	-128/+127	corrects vertical keystone distortion in image
Keystone H	-128/+127	corrects horizontall keystone distortion in image
Auto sync	execute	Unavailable in Video Mode

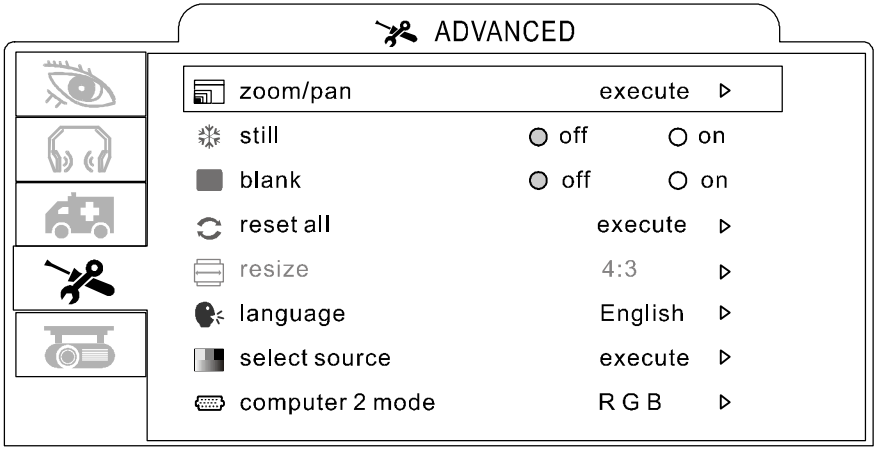
ADVANCED
zoom/pan execute
still off on
blank off on
reset all execute
resize 4:3
language English
select source execute
computer 2 mode R G B

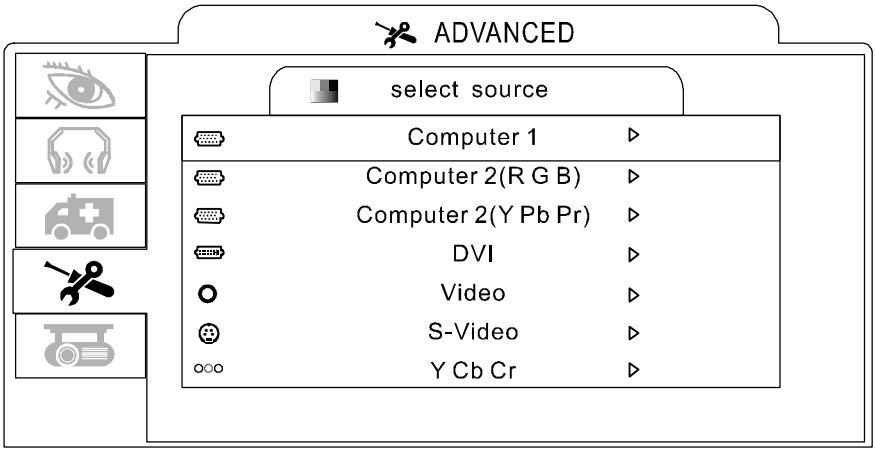
ADVANCED
select source
Computer 1
Computer 2(R G B)
Computer 2(Y Pb Pr)
DVI
Video
S-Video
Y Cb Cr

4. ADVANCED		
zoom/pan	execute	temporarily enlarge a portion of the image and view portions of the image that are not visible in the display area
still	on / off	freezes the current image on the screen
blank	on / off	Hides the image, displays a blank, black screen * (see below)
reset all	execute	resets all OSD Menu functions to their factory default values *(see below)
language	Eng	select the language that the OSD Menu and on screen massage are displayed in English/Chinese(s)/ Chinese(t)/Italian/Spanish/French/German
select source		select the input source from:
		computer1 / computer2(RGB) / computer2(YPbPr) / DVI / video / s-video / Y Cb Cr
Computer2 mode	RGB/ YPbPr	Switches computer2 input :RGB /Y Pb Pr

*Blank on

If the projector is left in Blank mode for more than 15 minutes, the projector will automatically shut off the lamp and enter cool-down mode.

*Reset all

1. After you select [reset all] on the OSD menu, the following confirmation message will appear on the screen.

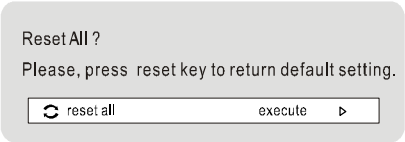

2. Press reset button on the remote control or the button on the keypad to reset the OSD Menu values. Press the ESC button or ignore the message to exit the Reset All fuction without changing any settings.

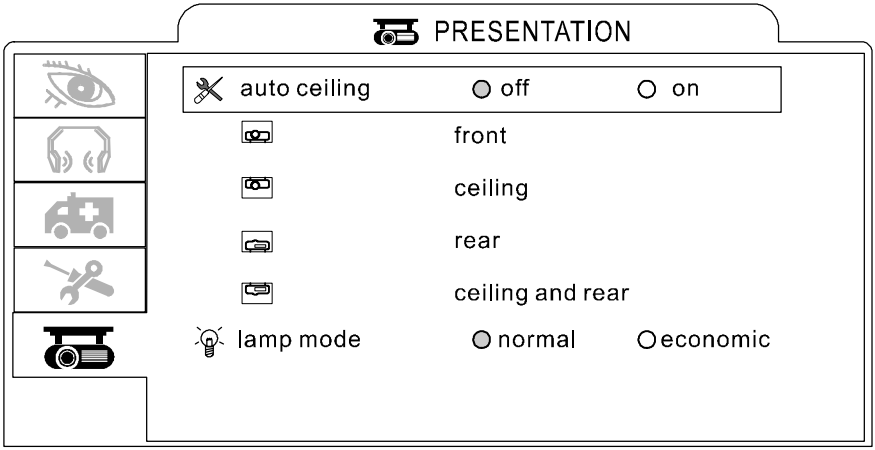

5. PRESENTAION		
auto ceiling	on / off	automatically inverts the image when the projector is turned upside down i.e. when the projector is mounted on the ceiling
front	execute	normal projection mode
ceiling	execute	inverts the image vertically, used when the projector is mounted upside down.
rear	execute	inverts the image horizontally, used when projecting onto a rear projection screen
ceiling and rear	execute	inverts the image horizontally and vertically, used when the projector is mounted upside down and projecting onto a rear projection screen
lamp mode	normal economic	economic mode reduces the lamp brightness to extend lamp life and quiet the projector

Maintenance and Troubleshooting_

Cleaning the projector

Warning: Always unplug the projector before performing any maintenance.

Clean the projector case by wiping it gently with a soft cloth.
If necessary, the case can be cleaned using a neutral detergent and a soft cloth ensure the case is completely dry before turning the projector back on.

Cleaning the lens

Use a commercially-available air blower, or use lens cleaning paper and lens cleaner approved for use on optical coatings.
Do not clean the lens with harsh materials or subject the lens to shock, as it can easily become damaged. Close the lens cover when the projector not in use.

Cleaning the Air Filter

A. When the air filter becomes clogged with dust, etc., the projector may overheat and turn itself off to prevent internal damage.
When cleaning the filter, stand the projector up on its side to prevent dust from entering the projector. Use a vacuum to remove the dust from the outside of the air filter. Do not operate the projector with the air filter removed.

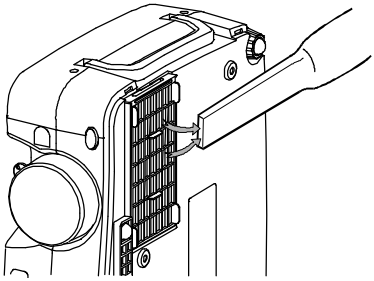

B. Clean the air filter every 100 hours.

**If the filter is difficult to clean or if it is deteriorating, it should be replaced*

1..Remove the filter cover from the bottom of projector.

2..Pull out the air filter.

3..Install the new air filter.

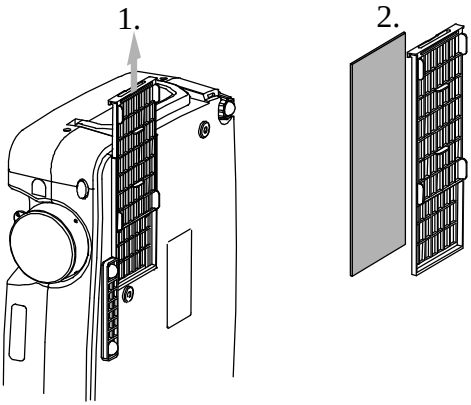

Replacing the Projection Lamp

***Caution**: The lamp and inside of the projector become very hot while the projection lamp is lit. Allow the projector to cool for at least 15 minutes prior to opening the lamp door.*

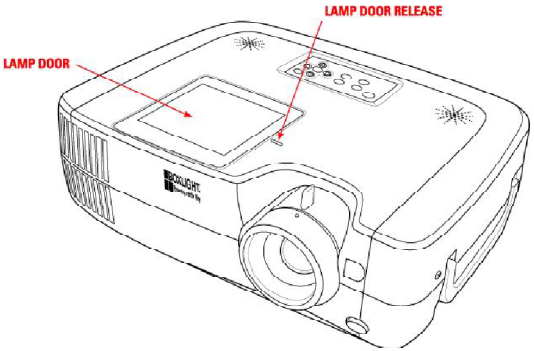

1. Release the Lamp Door Latch using a small screwdriver or similar tool to slide the latch towards the projector lens.
2. Remove the Lamp Door.
3. Remove the two Phillips head screws that hold the lamp in place.
4. Grasp the handle on the top of the lamp and pull the lamp straight up out of the projector.

   ***Warning:** Do not touch the bulb. Touching the bulb will greatly decrease the life of the lamp and could cause the bulb to explode.*
5. Slide the replacement lamp into place and press firmly to seat the lamp.
6. Reinstall the screws removed in step 3.
7. Reinstall the lamp door and press on the side closest to the lens until the latch snaps into place and the lamp door is flush with the top of the projector.

Indicators

The Power and Lamp indicators show the status of the projector. Before requesting repair, check the projector status using the chart below. If the problem cannot be resolved contact your dealer or Boxlight Technical Support for assistance.

Power (Green)	Lamp (Red)	Conditions	Notes
slow flashing	off	standy by mode	*projector is ready to be turned on(normal)
on	off	on mode	*projector is on and operating normally
on	slow flashing	cool-down mode	*projector is in cool-down mode and will not respond to user input (normal)
on	fast flashing	fan-fault mode	* the projector has detected a problem with an internal fan, the lamp will shut off automatically, contact your dealer
fast flashing	on	lamp-cover open	*the lamp cover is open or there is a problem with the lamp. If the lamp door is closed and replacing the lamp does not correct the issue, contact your dealer.
fast flashing	fast flashing	High temperature	*the projector has overheated and shut the lamp off. Correct the overtemp condition immediately. 1. Check that the ventilation slots are free from obstructions 2. Check the cleanliness of the air filter. 3. If the condition persists, contact your dealer or Boxlight Technical Support for service.

Symptom	Possible cause	Remedy
The power is not turned on	*The main power switch is not turned on. *The power cord is disconnected.	*Turn on the main power switch. *Plug the power cord into an AC power outlet
No video or audio	*The input is not correctly connected. *No signal input	*Select the appropriate input source *Connect correctly
No audio	*The projector is not correctly connected. *The volume is set to minimum. *Mute is turned on	*Connect correctly. *Press VOLUME+ on the remote control or display the menu screen and adjust the volume. *Press the MUTE button
No Image	*The projector is not correctly connected. *The lens cover is still on	*Connect correctly. *Remove the lens cover
.Colors are pale	*Color density and color matching are not correctly adjusted.	*Adjust the setting in the OSD Menu.
Images are dark	*Brightness and contrast are not correctly adjusted. *The lamp is nearing the end of its service life	*Adjust the S-video. *Replace with a new lamp
Video is blurred	*Focus or phase is out of adjustment.	*Adjust the focus or phase.

List of Supported Display Modes

Signal	Refresh Rate(Hz)	Resolution	Resolution for resized display	Resolution for normal display
PC98		640x400	1024x640	640x400
EGA		640x350	1024x560	640x350
VGA	60	640x480	1024x768	640x480
VGACGA		640x400	1024x640	640x400
VGAEGA		640x350	1024x560	640x350
VGA text		720x350	1024x568	720x400
		720x350	1024x498	720x350
VESA	72/75/85/120, iMAC	640x480	1024x768	640x480
SVGA	56/60/72/75/85/-120,iMAC	800x600	1024x768	800x600
XGA	43I/60/70/75/85/-120,iMAC	1024x768	1024x768	1024x768
SXGA	70/75/85/100	1152x864	1024x768	1152x864
SXGA	60/75/85	1280x960	1024x768	1280x960
SXGA	43I/60/70/75 /85	1280x1024	960x768	1280x1024
SXGA+	60/75/85	1400x1050	1024x768	1400x1050
UXGA	48i/60/65/70/ 75/80/85	1600x1200	1024x768	1600x1200
MAC13"		640x480	1024x768	640x480
MAC16"		832x624	1024x768	832x624
MAC19"		1024x768	1024x768	1024x768
MAC21"		1152x870	1016x768	1152x870
TV(525i)	60	640x480	1024x768	640x480
TV(625i)	50	720x540	1024x768	720x540
SDTV(525p)	60	640x480	1024x768	640x480
HDTV(750P)	60	1280x720	1024x576	
HDAV(1125i-,1125p)	60	1920x1080	1024x576	

Specifications

Projection Display	Epson 0.99" Poly-Silicon TFT LCDx3		
Resolution	True XGA, 1024x768 / SVGA, 800x600		
Projection Lens	Manual, F#1.7~2.41, f=33.4~43.3mm, zoom1		
Image Size	30"~300"		
Projection Distance	0.9M~10M		
Uniformity	Typical 85%image center-to-corner		
Color Temperature	6400 K~ 6800 K		
Scanning Frequency	Horizontal: 15~107kHz, V-syns.43~120Hz		
Video Compatibility	NTSC, PAL, SECAM, HDTV720P		
Computer Compatibility	UXGA, SXGA, XGA, SVGA, VGA		
Inputs / Outputs	Computer :	x1	DVI-I
	Computer :	x1	Mini D-sub 15 pin(female)
	Monitor Out:	x1	Mini D-sub 15 pin(female)
	Audio in 1 :	x1	Stereo mini jack
	Audio in 2 :	x1	Stereo mini jack
	Audio out 1 :	x1	Stereo mini jack
	Control(RS-232) :	x1	Mini D-sub 9 pin
	S-Video :	x1	Mini DIN 4-pin
	Video :	x1	RCA pin jack
	Mouse :	x1	USB connector (B-type)
	Component	x1	RCA pin jack
Power Consumption	350W at normal operation		
Power Supply	350W fully range from 100V~240V 50/60Hz		
Installation	Front / Rear /Ceiling		
Dimension(WxHxD)	364x110x285 mm		
Weight	5.3 kg		
Operation Temperature	+5~+35 degreC		
Storage Temperature	-10~+60 degreC		
Operation Humidity	20~80%RH		
Digital Keystone Correction	+-5 degre(H/V)		
Aspect Ratio	4:3 (support 16:9)		

LIMITED WARRANTY

Boxlight (“Boxlight”) warrants that each Boxlight MP-60e and MP-63e (“the Product”) sold hereunder will conform to and function in accordance with the written specifications of Boxlight. Said limited warranty shall apply only to the first person or entity that purchases the Product for personal or business use and not for the purpose of distribution or resale. Said warranty shall continue for a period of two (2) years from the date of such purchase. The standard limited warranty excludes the lamps in projectors after 120 days or 500 hours (whichever comes first) and the accessories after one year. Boxlight does not warrant that the Product will meet the specific requirements of the first person or entity that purchases the Product for personal or business use. Boxlight’s liability for the breach of the foregoing limited warranty is limited to the repair or replacement of the Product or refund of the purchase price of the Product, at Boxlight’s sole option. Replacement Product may be re-furbished in “like-new” condition, at Boxlight’s sole discretion. To exercise the Purchaser’s rights under the foregoing warranty, the Product must be returned at the Purchaser’s sole cost and expense, to Boxlight or to any authorized Boxlight service center, and the Product must be accompanied by a written letter explaining the problem and which includes (i) proof of date of purchase; (ii) the dealer’s name; and (iii) the model and serial number of the Product. When sending your unit in for repair, please ship your unit in its original packing material or a Boxlight approved ATA Shipping Case, or have a professional packaging company pack the unit. Please insure your shipment for its full value. **A return authorization number, issued by the Boxlight Customer Service department, must also be clearly displayed on the outside of the shipping carton containing the Product.**

WARRANTY LIMITATION AND EXCLUSION

Boxlight shall have no further obligation under the foregoing limited warranty if the Product has been damaged due to abuse, misuse, neglect, accident, unusual physical or electrical stress (unusual physical and electrical stress includes unusually long operation, exposure to smoke and other airborne contaminants), unauthorized modifications, tampering, alterations, or service other than by Boxlight or its authorized agents, causes other than from ordinary use or failure to properly use the Product in the application for which said Product is intended.

DISCLAIMER OF UNSTATED WARRANTIES

THE WARRANTY PRINTED ABOVE IS THE ONLY WARRANTY APPLICABLE TO THIS PURCHASE. ALL OTHER WARRANTIES, EXPRESS OR IMPLIED, INCLUDING, BUT NOT LIMITED TO, THE IMPLIED WARRANTIES OF MERCHANTABILITY AND FITNESS FOR A PARTICULAR PURPOSE ARE DISCLAIMED. THERE ARE NO WARRANTIES THAT EXTEND BEYOND THE FACE HEREOF AND THE FOREGOING WARRANTY SHALL NOT BE EXTENDED, ALTERED OR VARIED EXCEPT BY WRITTEN INSTRUMENT SIGNED BY BOXLIGHT. SOME STATES DO NOT ALLOW LIMITATIONS ON HOW LONG AN IMPLIED WARRANTY MAY LAST, SO SUCH LIMITATIONS MAY NOT APPLY TO YOU.

LIMITATION OF LIABILITY

IT IS UNDERSTOOD AND AGREED THAT BOXLIGHT'S LIABILITY WHETHER IN CONTRACT, IN TORT, UNDER ANY WARRANTY, IN NEGLIGENCE OR OTHERWISE SHALL NOT EXCEED THE RETURN OF THE AMOUNT OF THE PURCHASE PRICE PAID BY PURCHASER AND UNDER NO CIRCUMSTANCES SHALL BOXLIGHT BE LIABLE FOR SPECIAL, INDIRECT, INCIDENTAL OR CONSEQUENTIAL DAMAGES OR LOST PROFITS, LOST REVENUES OR LOST SAVINGS. THE PRICE STATED FOR THE PRODUCT IS A CONSIDERATION IN LIMITING BOXLIGHT'S LIABILITY. NO ACTION, REGARDLESS OF FORM, ARISING OUT OF THE AGREEMENT TO PURCHASE THE PRODUCT MAY BE BROUGHT BY PURCHASER MORE THAN ONE YEAR AFTER THE CAUSE OF ACTION HAS ACCRUED. SOME STATES DO NOT ALLOW THE EXCLUSION OR LIMITATION OF INCIDENTAL OR CONSEQUENTIAL DAMAGES SO THE ABOVE LIMITATION OR EXCLUSION MAY NOT APPLY TO YOU. THIS LIMITED WARRANTY GIVES YOU SPECIFIC LEGAL RIGHTS, AND YOU MAY ALSO HAVE OTHER RIGHTS THAT VARY FROM STATE TO STATE.

Boxlight Corporation
19332 Powder Hill Place
Poulsbo, WA 98370-7407 USA
USA and Canada 800.762.5757
International +1.360.779.7901
www.boxlight.com