USA's primary source for projector lamps

myprojectorlamps

PROJECTOR OWNER'S MANUAL

Boxlight

MP-350M

Need a replacement lamp for this projector?

www.myprojectorlamps.com

Original manufacturer manual, provided unmodified as a courtesy of MyProjectorLamps.com.
All trademarks belong to their respective owners.

Copyright © 1998 by Boxlight Corporation
Poulsbo, Washington. All rights reserved.

FCC Warning

This equipment has been tested and found to comply with the limits for a Class A digital device, pursuant to part 15 of the FCC Rules. These limits are designed to provide reasonable protection against harmful interference when the equipment is operated in a commercial environment. This equipment generates, uses, and can radiate radio frequency energy and, if not installed and used in accordance with the instruction manual, may cause harmful interference to radio communications. Operation of this equipment in a residential area is likely to cause harmful interference in which case the user will be required to correct the interference at his own expense.

DOC (Canada)

This Class A digital apparatus meets all requirements of the Canadian Interference-Causing Equipment Regulations.
Cet appareil numerique de la classe A respecte toutes les exigences du Reglement sur le materiel brouilleur du Canada.

Safety Certifications

UL, CUL, TÜV

EN 55022 Warning

This product is intended for use in a commercial, industrial, or educational environment. It is not intended for residential use.

This is a Class A product. In a domestic environment it may cause radio interference, in which case the user may be required to take adequate measures. The typical use is in a conference room, meeting room or auditorium.

Wenn das Produkt MP-350m in Deutschland verkauft wird, muss es Umwelt geschuetzt sein. (Klasse B) Dieses Product muss mit dem Bundesamt fuer Post und Telekommunikation registriert sein. (BAPT)

Remote Control Warning

Laser radiation class II product; wavelength 670nm; maximum output 1mW. Remote control complies with applicable requirements of 21 CFR 1040.10 and 1040.11. Remote control complies with applicable requirements of EN 60 825-1: 1994 +A11.

Declaration of Conformity

Manufacturer: Boxlight Corporation
19332 Powder Hill Place, Poulsbo, Washington, USA

We declare under our sole responsibility that the MP-350m projector conforms to the following directives and norms:

Directive 89/336/EEC, Amended by 93/68/EEC
EMI: EN 55022 (1992) Class A
EMC: EN 50082-1 (1992)
Directive 73/23/EEC, Amended by 93/68/EEC
Safety: EN 60950: 1992 + A1 + A2 + A3: 1995

January, 1999

Trademarks

Apple, Macintosh, and PowerBook are trademarks or registered trademarks of Apple Computer, Inc. IBM and PS/2 are trademarks or registered trademarks of International Business Machines, Inc. MicroSaver and Kensington are trademarks or registered trademarks of Kensington Microware Limited. Microsoft, PowerPoint, and Windows are trademarks or registered trademarks of Microsoft Corporation. CablePro is a trademark or registered trademark of Boxlight Corporation.

TABLE OF CONTENTS

Safety Instructions **iii**

Introduction **1**
Image Resolution 1
Compatibility 1
Unpacking the Projector 1
Usage Guidelines 3
If You Need Assistance 4
Warranty 4

Setting up the Projector **5**
Connecting the CablePro™III to the Projector 6
Preparing to Connect Your Equipment to the Projector 7
Connecting a Laptop Computer 8
Connecting a Desktop Computer 10
Connecting a Computer Using a VESA cable 12
Connecting a Video Player 13
Connecting an External Speaker 15
Powering up the Projector and Adjusting the Image 15
Turning Off the Projector 16

Using the Projector **17**
Basic Image Adjustment 17
Using the Remote Control 17
Adjusting the Projector 19
Using the Remote and Keypad Buttons 21
Using the On-Screen Menus 24
Display Menu Functions 25
Audio Menu Functions 27
Image Menu Functions 29
Controls Menu Functions 31
Language menu 33
Status menu 33

Maintenance & Troubleshooting **35**
Cleaning the Lens 35
Cleaning the Fan Intake Filter 35
Replacing the Projection Lamp 37
Replacing the Batteries in the Remote Control 39
Using the Kensington Lock 39
Troubleshooting 40
Solutions to Common Problems 41

Appendix **47**
Specifications 47
Accessories 49
Portable and Laptop Activation Chart 51
Using Video Mirroring with a PowerBook Computer 55
Projected Image Size 56

Index **59**

SAFETY INSTRUCTIONS

Please read and follow all safety instructions provided BEFORE using your new projector. Failure to comply with safety instructions may result in fire, electrical shock, or personal injury and may damage or impair protection provided by equipment. Please save all safety instructions.

Safety Definitions:

- **Warning:** Statements identify conditions or practices that could result in permanent personal injury.
- **Caution:** Statements identify conditions or practices that could result in damage to your equipment.

Safety Terms:

- **Warning:** Don't look directly into the lens when the projector is turned on.
- **Warning:** Don't block ventilation openings.
- **Warning:** To replace the lamp, turn the power off and unplug the power cord. To avoid burns, wait 30 minutes before opening the lamp door. Follow all instructions provided in this User's Guide.
- **Warning:** Please use the power cord provided. Connect the power cord to a receptacle with a protective safety (earth) ground terminal.
- **Warning:** Visible laser radiation. Do not stare into beam.
- **Warning:** Refer all service to qualified service personnel. Servicing your own projector will void the warranty. See the next page for the customer service contact information.
- **Caution:** Don't set liquids on the projector. Spilled liquids may damage your projector.
- **Caution:** Don't place the projector on a hot surface or in direct sunlight.
- **Caution:** Do not drop the projector. Transport the projector in a Boxlight-approved case; see page 50 for a list of cases.

- **Caution:** For ceiling mount installations, please use the ceiling mount recommended in this User's Guide and follow all instructions provided with it.

Safety Symbols:

Attention: For information about usage of a feature, please refer to the User's Guide.

Warning: Hot surface. Do not touch.

An arrow pointing to the lamp door of the projector.

Warning: Laser radiation. Do not stare into laser beam.

Customer Service

If you need assistance, call Boxlight at **1-800-762-5757**.

INTRODUCTION

The Boxlight MP-350m™ lightweight multimedia projector combines powerful and sophisticated features with easy-to-use, intuitive controls. Built-in multimedia features include audio, a palette of 16.7 million colors and active matrix liquid crystal display (LCD) technology. It delivers crisp, clear XGA 1024x768 images. The projector is ideal for high-performance business, training and imaging applications that demand exceptional color quality.

Image Resolution

The XGA resolution of the projected image is 1024x768. Screen resolutions between 1024x768 and 1280x1024 are compressed to 1024x768. The projector cannot compress screen resolutions above 1280x1024. If your computer's screen resolution is higher than 1280x1024, reset it to a lower resolution before you connect the projector**.**

NOTE: *The projector automatically expands 640x480 and 800x600 images to 1024x768. You can display these images at their original resolutions by turning off the Auto Resize feature. See "Auto Resize" on page 29 for more information.*

Compatibility

The projector is compatible with a wide variety of computers and video devices, including:

- IBM-compatible computers, including laptops, up to 1280x1024 resolution at 75 Hz.
- Apple Macintosh and PowerBook computers up to 1280x1024 resolution.
- Most standard VCRs, camcorders, DVD and laser disc players.

NOTE: *Selected workstations are also supported. Contact Boxlight for details.*

Unpacking the Projector

The projector comes with the items shown in Figure 1. Check to make sure all are included. **Contact Boxlight immediately if anything is missing.**

If you are experienced in setting up presentation systems, use the *Boxlight MP-350m Quick Start* card that was included in the shipping box. For complete details on connecting and operating the projector, refer to this User's Guide.

NOTE: *The contents of your shipping box may vary depending on the configuration you've ordered.*

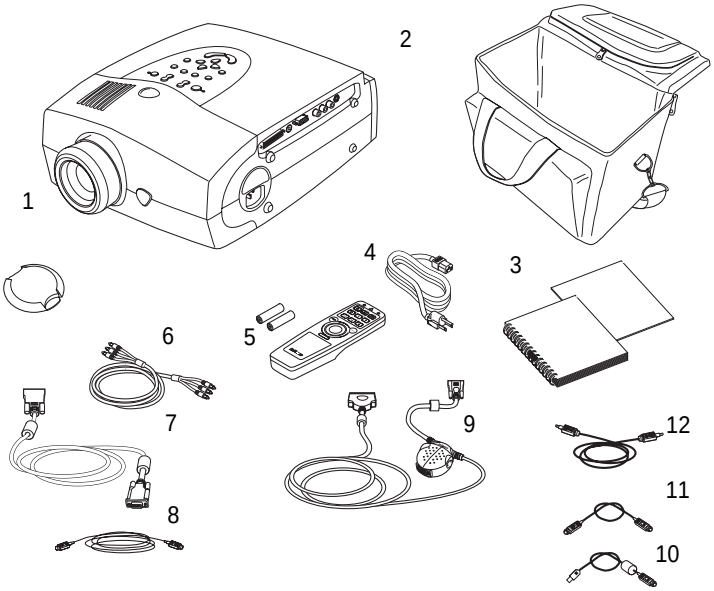

FIGURE 1

Shipping box contents

1. MP-350m projector and lens cap
2. Soft carry case
3. MP-350m documentation: User's Guide, Quick Start card
4. power cord
5. remote and batteries
6. RCA audio/video (A/V) cable
7. VESA cable
8. VESA audio cable
9. CablePro III
10. CablePro USB mouse cable
11. CablePro PS/2 mouse cable
12. CablePro audio cable

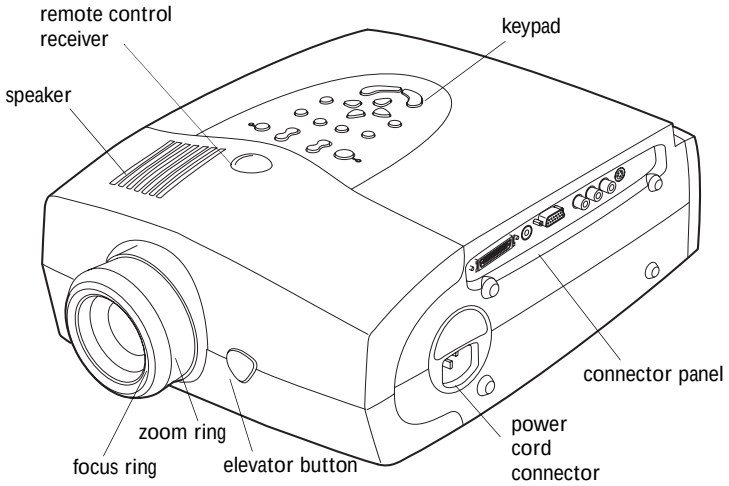

FIGURE 2

Projector

Usage Guidelines

- Do not look directly into the projection lens when the projector is turned on. The bright light may harm your eyes.
- Do not block the grills on the projector. Do not place the projector on cloth table coverings, as they may get sucked up to the vents. Restricting the air flow can cause it to overheat and turn off.
- Handle the projector as you would any product with glass components. Be especially careful not to drop it.
- Avoid leaving the projector in direct sunlight or extreme cold for extended periods of time. If this happens, allow it to reach room temperature before use.
- This projector is not intended for use in a mainframe computer room as defined in the Standard for the Protection of Electronic Computer/Data Processing Equipment, ANSI/NFPA 75.
- Transport the projector in a vendor-approved hard or soft case. Call Boxlight to order.

***NOTE**: We recommend that you wait 30 seconds before powering up the projector after shutting it down.*

If You Need Assistance

The first place to look for help is in this manual. Be sure to check the guidelines in “Troubleshooting” on page 40.

If this manual doesn’t answer your question, call Boxlight at **1-800-762-5757**.

Warranty

This product is backed by a limited two-year warranty. The details of the warranty are printed at the back of this manual.

SETTING UP THE PROJECTOR

1 Place the projector on a flat surface.

- The projector must be within 10 feet (3 m) of your power source and within 8 feet (2.4 m) of your computer.
- If you want to project from behind a translucent screen, set up the projector behind your screen. See “Rear Projection” on page 31 to reverse the image.
- If you are installing the projector on the ceiling, refer to the *Ceiling Mount Installation Guide* that comes with the Ceiling Mount Kit for more information. To turn the image upside down, see “Ceiling Projection” on page 31. The Ceiling Mount Kit is sold separately.

2 Position the projector the desired distance from the screen.

- The distance from the lens of the projector to the screen determines the size of the projected image. Figure 3 shows three projected image sizes using the lens at minimum focusing distance. For more information about image size, see “Projected Image Size” on page 56.

3 Make sure the projector and your computer are turned off.

***NOTE**: An optional extension cable, sold separately, lets you increase the distance between the projector and your computer to 68 feet (21 m). See “Optional Accessories” on page 50.*

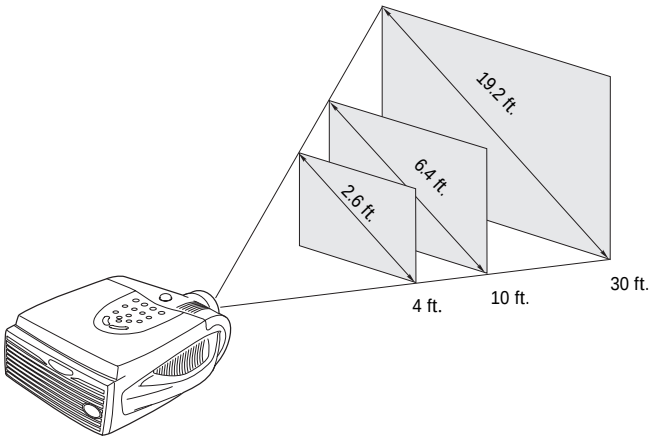

FIGURE 3

Projected image size (minimum focusing distance)

CAUTION: *Turn off the computer, monitor and projector whenever you connect or disconnect cables.*

NOTE: *The projector is optimized for use with newer CablePros (2 and 3). If you have a CablePro 1from older models of Boxlight projectors, we do not recommend using it as image quality is reduced. The label on the bottom reads CablePro or CablePro II or CablePro III.*

Connecting the CablePro™III to the Projector

The CablePro III (referred to as "CablePro" in this manual for brevity) simplifies the connection process by providing a central hub for all the connections between the projector and your computer. The connectors on the CablePro are labeled with icons. The CablePro also has an LED that lights solid green when the projector is on and CablePro is functioning properly. A slowly blinking LED indicates CablePro is waiting to initialize with the projector; a rapidly blinking LED indicates a problem with CablePro.

Connect the end of the CablePro cable to the connector on the projector's connector panel (Figure 4).

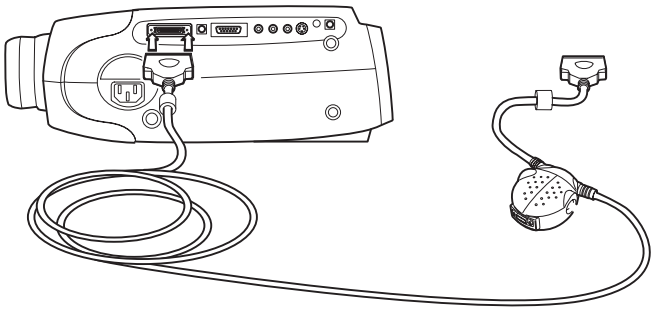

FIGURE 4

Connecting the CablePro to the projector

Preparing to Connect Your Equipment to the Projector

Now you're ready to connect your equipment. Computers are connected to the CablePro. Video players and other equipment, such as external speakers, are connected directly to the projector.

Steps for connecting the different types of equipment are given on the pages listed below.

Equipment you want to connect	Page
Laptop computer with CablePro	page 8
Desktop computer with CablePro	page 10
Computer with VESA cable	page 12
USB or PS/2 mouse	page 8, page 11
Video player	page 13
External speaker	page 15

***NOTE**: Before you continue, make sure the projector and your equipment are turned off. If you're connecting a computer, make sure the distance between it and the projector is 10 feet or less.*

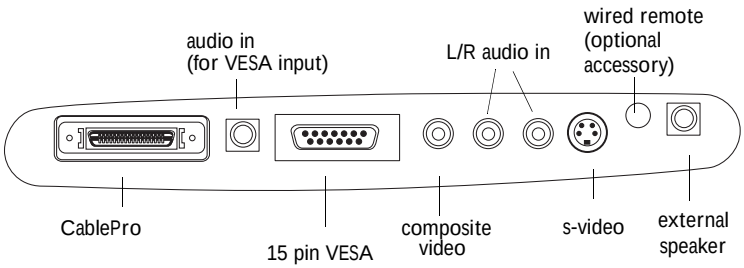

FIGURE 5

Connector panel

***NOTE**: In some older computers, the monitor connector does not have a hole for Pin 9. If you have trouble connecting the CablePro cable to your computer, contact Boxlight Technical Support.*

***NOTE:** If you are connecting an older Macintosh computer that does not have a 15-pin connector, you must use Mac adaptors (ordered separately).*

NOTE: *Many laptop computers do not automatically turn on their external video port when a secondary display device such as a projector is connected. Refer to your computer manual for the command that activates the external video port. Activation commands for some laptop computers are listed in the Appendix.*

NOTE: *If you don't want audio or mouse control, you can use a simplified cable called CablePro Lite, ordered separately. See "Optional Accessories" on page 50.*

NOTE: *If you are connecting an older Macintosh computer that does not have a 15-pin connector, you must use Mac adaptors (ordered separately). See "Optional Accessories" on page 50.*

Connecting a Laptop Computer

1 Plug the end of the CablePro cable into the video connector on your laptop.

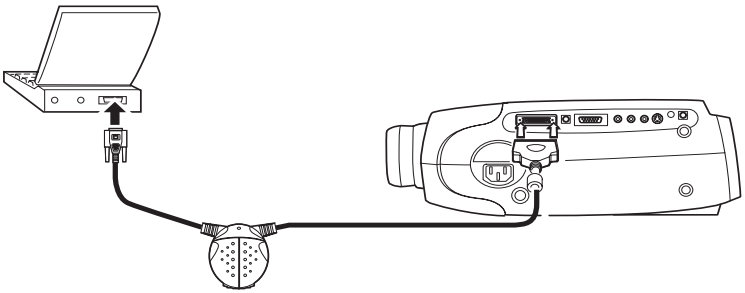

FIGURE 6

Connecting the CablePro to a laptop computer

Do you want to play your computer's audio on the projector?

1 Plug either end of the CablePro audio cable into the audio connector on your computer.

2 Plug the other end of the audio cable into the connector on the CablePro.

Do you want to control the computer's mouse from the projector's remote or keypad?
If your computer has a PS/2 connector, use the PS/2 cable

1 Plug the end of the CablePro mouse cable into the mouse connector on your computer.

2 Plug the end of the CablePro mouse cable into the connector on the CablePro.

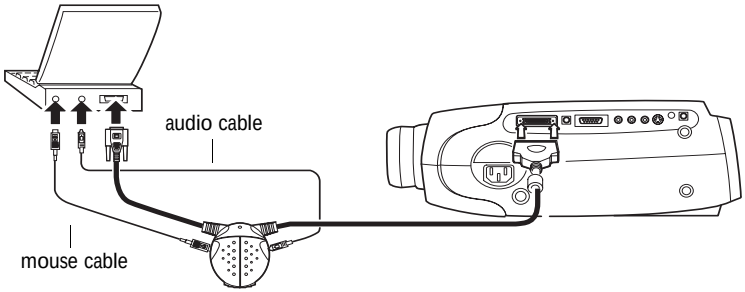

FIGURE 7

Connecting the CablePro audio and mouse cables to a laptop computer

If your computer has a USB connector and is running Windows 98, use the USB cable

1. Plug the end of the CablePro mouse cable into the mouse connector on your computer.
2. Plug the end of the CablePro mouse cable into the connector on the CablePro.

You must have the appropriate USB drivers installed on you computer to use the USB feature. Windows 98 ships with the appropriate drivers.

Now you're ready to power up the projector and your laptop. Skip to "Powering up the Projector and Adjusting the Image" on page 15.

NOTE: *The USB mouse is supported for use with Windows 98 only.*

NOTE: *A USB mouse is hot-pluggable, meaning you do not need to re-boot your computer after connecting the mouse to use it. A PS-2 mouse is not hot-pluggable.*

Connecting a Desktop Computer

1 Locate the cable that connects your monitor to your computer. Unplug it from the computer.

2 Plug the end of the CablePro cable into the monitor connector on your computer.

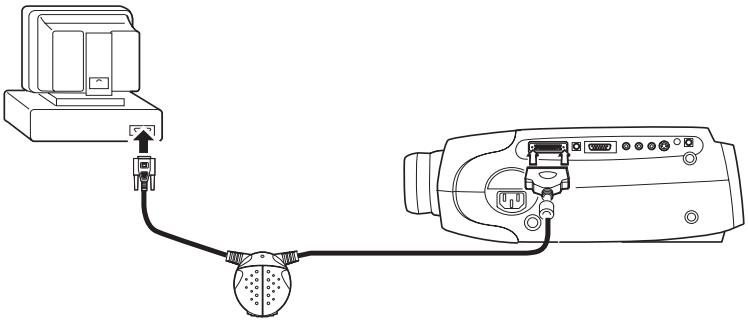

FIGURE 8

Connecting the CablePro cable to an IBM-compatible desktop computer

***NOTE**: The projector must be turned on to display the image on your monitor.*

Do you want to display the image on your computer's monitor as well as on the projection screen?

1 Plug your monitor's cable into the connector on the CablePro.

Do you want to play your computer's audio on the projector?

1 Unplug the audio cable, if present, from your computer.

2 Plug either end of the CablePro audio cable into the audio connector on your computer.

3 Plug the other end of the audio cable into the connector on the CablePro.

Do you want to control your computer's mouse from the projector's remote or keypad?
If your computer has a PS/2 connector, use the PS/2 cable

1 Unplug the mouse cable from your computer.

2 Plug the end of the CablePro mouse cable into the mouse connector on your computer.

3 Plug the end of the CablePro mouse cable into the connector on the CablePro.

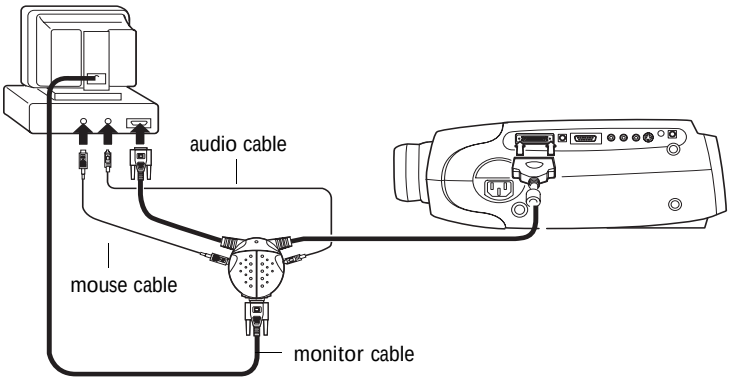

FIGURE 9

Connecting the CablePro monitor, audio and mouse cables to a desktop computer

***NOTE**: The USB mouse is supported for use with Windows 98 only.*

If your computer has a USB connector and is running Windows 98, use the USB cable

1 Plug the end of the CablePro mouse cable into the mouse connector on your computer.

2 Plug the end of the CablePro mouse cable into the connector on the CablePro.

You must have the appropriate USB drivers installed on you computer to use the USB feature. Windows 98 ships with the appropriate drivers.

Now you're ready to power up the projector and your computer. Skip to "Powering up the Projector and Adjusting the Image" on page 15.

***NOTE:** A USB mouse is hot-pluggable, meaning you do not need to re-boot your computer after connecting the mouse to use it. A PS-2 mouse is not hot-pluggable.*

Connecting a Computer Using a VESA cable

The supplied VESA cable connects to the High Density 15-pin connector (HD 15) on the projector. This input is designated Computer 2.

1. Plug one end of the VESA cable into the video connector on your computer. Plug the other end into the HD 15 connector on the projector.
2. If you want audio with your presentation, plug the supplied audio cable into the audio connector on your computer. Plug the other end into the 🔊 connector on the projector.

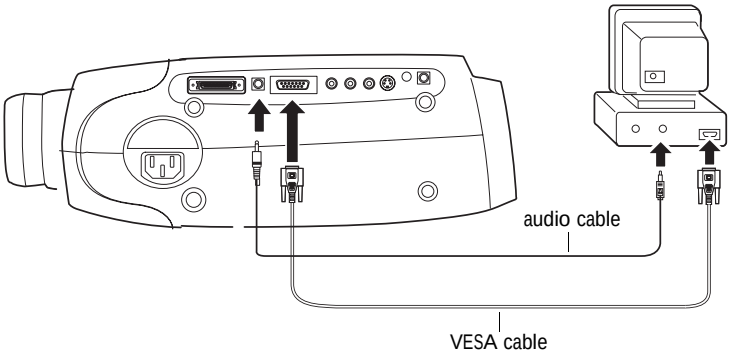

FIGURE 10

Connecting the VESA computer cable to a computer

Connecting a Video Player

1. If your video player uses a round, one-prong composite video connector, you'll need only the A/V cable that shipped with the projector.
   - If your video player uses a round, four-prong S-video connector, you'll need an S-video cable in addition to the A/V cable. The S-video cable is sold separately. (See "Optional Accessories" on page 50.)
2. Plug the A/V cable's yellow connector into the "video-out" port on your video player (Figure 11). This port may be labeled "To Monitor."
   - If you're using an S-video cable, connect it to the "s-video out" connector on the video player (Figure 12).
3. Plug the other yellow connector into the composite connector on the projector.
   - If you're using S-video, plug the other end of the cable into the "s-video" connector on the projector (Figure 12).

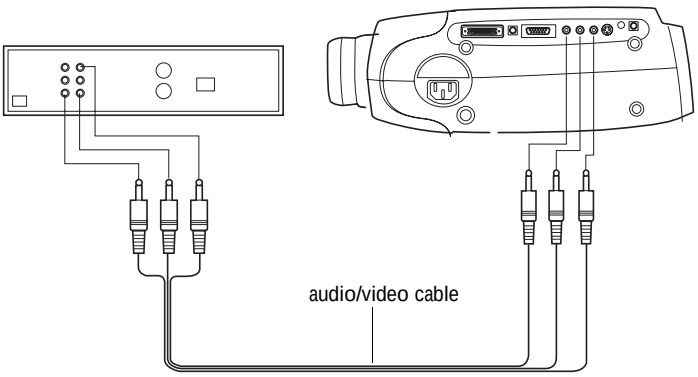

FIGURE 11

Connecting the projector to a video player using the standard A/V cable (with composite video connector)

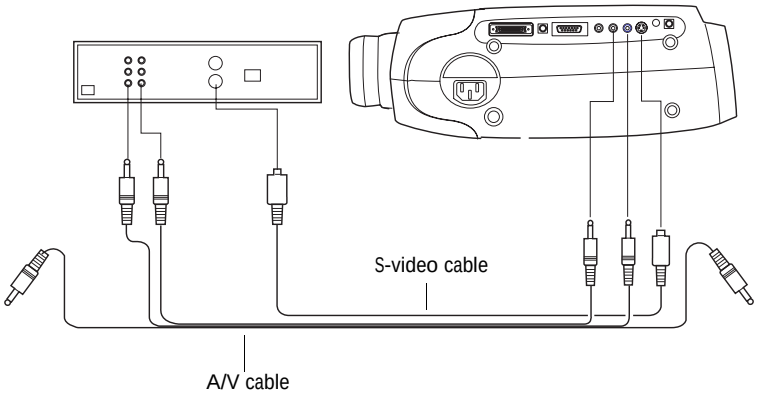

FIGURE 12

Connecting the projector to a video player using an S-video cable and the audio connectors on the standard A/V cable

4 Plug the A/V cable's white connector into the left "audio out" port on your video player. Plug the cable's red connector into the right "audio out" port on the video player (Figure 11 and Figure 12).

- If you're using an S-video cable, the yellow connectors on the A/V cable remain unused (Figure 12).

5 Plug the A/V cable's other white and red connectors to the left and right "audio in" ports on the projector.

CAUTION: *Your video player may also have a "Video Out" port for a coaxial cable connection. DO NOT use this to connect to the projector.*

The projector is compatible with these major broadcast video standards: NTSC, NTSC 4.43, PAL, PAL-M, PAL-N, and SECAM. It automatically adjusts to optimize its performance for the incoming video. The input signals for SECAM, PAL-M, and PAL-N video cannot be automatically detected, therefore they must be chosen manually; see "Video Standard" on page 31.

Connecting an External Speaker

To connect one or two external speakers, plug the speaker cable into the (audio out) connector on the projector.

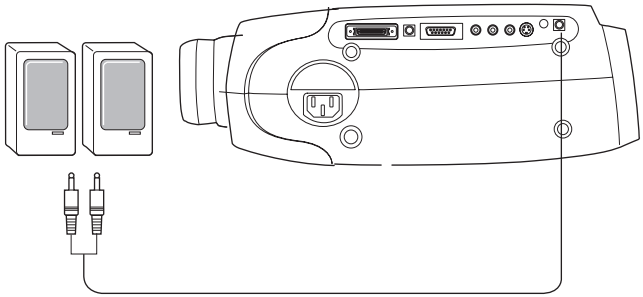

FIGURE 13

Connecting an external speaker

Powering up the Projector and Adjusting the Image

1. Remove the lens cap.
2. Plug the power cord into the side of the projector, then plug it into your electrical outlet. A surge-protected power strip is recommended if power surges are common in your area.
   - The Power button on the keypad lights and the fans run on low speed. After the projector has initialized, the Power LED (Figure 18 on page 21) lights solid green.
3. Turn on the projector by pressing the power button on the keypad.
   - The startup screen displays.
4. If you connected a video player, turn it on.
   - Press the **video** button on the keypad to display the image from your video player. (You can select a default source to determine which source the projector examines first during power-up for active video; see “Default Source” on page 32.)
   - Use the **volume** buttons to adjust the volume.

***NOTE**: Always use the power cord that shipped with the projector.*

***CAUTION:** If the lamp LED remains solidly lit after the projector has powered on, the lamp needs to be replaced. Refer to “Replacing the Projection Lamp” on page 37 for more information.*

- If you don't want to hear the sound from your video player, press the **mute** button.

5 If you connected any external speakers, turn them on.

6 If you connected your monitor, turn it on.

7 Turn on your computer.

- The computer image should display on the projection screen. (If a video source is active, press the **comp** button to display your computer's image.)
- If necessary, use the **brightness** buttons on the keypad to adjust the brightness. You can make further adjustments to the image from the projector's on-screen menus. To open the menus, press the **menu** button on the keypad. Then select the Display menu or the Image menu. For more information about the menus, see page 24.
- If you don't want to hear the sound from your computer or video player, press the **mute** button.

***NOTE**: With some computers, the order in which you power up the equipment is very important. Most computers should be turned on last, after all other peripherals have been turned on. Refer to your computer's documentation to determine the correct order.*

Turning Off the Projector

If you want to turn off the projector for a short period of time, press the **standby** button on the keypad. The Standby LED on the keypad lights solid green. This blanks the screen for 15 minutes, but keeps the projector running. After 15 minutes, the lamp goes out (the projector keeps running). To exit standby mode, press the **standby** button again. The Standby LED goes out. (It takes several seconds for the projection lamp to reach full power and project the image again.) You can change the amount of time the projector stays in standby mode; see "Standby Time" on page 31 for details.

To completely power off the projector, press the **power** button on the keypad. We recommend waiting 30 seconds before pressing the **power** button again.

***CAUTION:** When you disconnect the projector after you have switched it off, always remove the power cord from the electrical outlet first, then remove it from the projector.*

USING THE PROJECTOR

This section describes how to use and make adjustments to the projector. It also provides a reference to the keypad and remote buttons and the options available from the on-screen menus.

Basic Image Adjustment

1. Make sure you have powered up your equipment in the right order (page 15).
2. If the image doesn't display completely, adjust the height and tilt of the projector (page 19), zoom the image (page 19), or center the image by adjusting its horizontal or vertical position (page 30).
3. If the image is out of focus, rotate the lens to focus it (page 19).
4. If the image appears to shimmer or if it has blurry vertical bars after you have adjusted the focus, turn Auto Image (page 29) off and then back on to reset the automatic sync and tracking. If that doesn't clear up the image, adjust the sync (page 29) and / or the tracking (page 30) manually.
5. If the colors don't look right, adjust the brightness (page 22) and tint (page 26).

Using the Remote Control

Point the remote control at the projection screen or at the front or rear of the projector. The range for optimum operation is about 25 feet. If you point the remote at the projection screen, the distance to the screen and back to the projector must be less than or equal to 25 feet. For best results, point the remote directly at the front or the rear of the projector.

The projector ships with a full-feature remote (see page 21 for a description of the buttons) which includes a laser pointer. The remote has a disk mouse and two mouse buttons, one on the top of the remote and one on the bottom.

NOTE: *If you can't aim the remote control at the projector so that its signal is received — for example, when using rear projection — connect the remote directly to the projector with the remote control cable.*

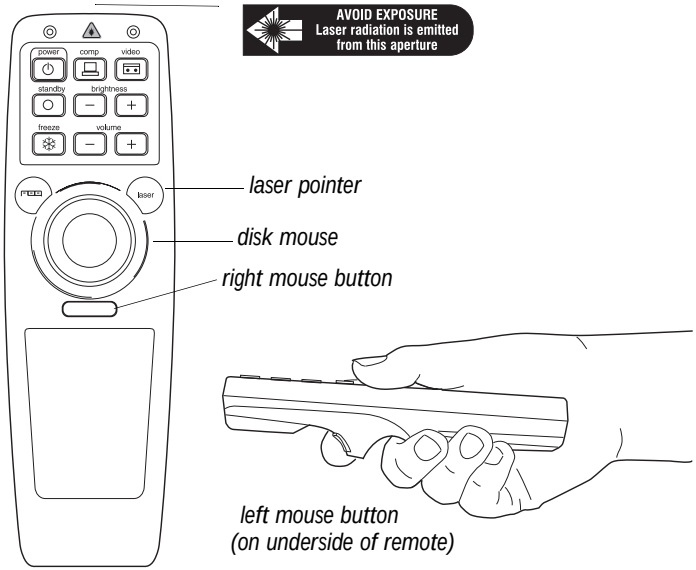

FIGURE 14

Remote control

NOTE: *To control the computer's mouse from the projector's remote or keypad, you must connect the mouse cable to the CablePro. See page 7 for details.*

Press anywhere on the edge of the disk mouse to move the cursor on the screen. You can move the cursor at any angle by pressing the corresponding edge of the disk. The mouse button on the top of the remote simulates your computer's right mouse button; the button on the bottom simulates your computer's left mouse button. When you press the disk mouse, the remote lights up. The light goes off 10 seconds after you stop pressing buttons.

To use the laser, press and hold the laser button. The laser goes off when the button is released.

If you are creating presentations in Microsoft® PowerPoint®, you can use the remote's mouse buttons to navigate through your presentation while in Slide Show mode. To configure PowerPoint for this, choose Options from the Tools menu, click the View Tab, de-select the "Popup Menu on Right Mouse Click" option in the Slide Show section, then click OK. Then, when you're in PowerPoint's Slide Show mode, a left click advances to the next slide and a right click returns to the previous slide (other PowerPoint modes are not affected).

Adjusting the Projector

To focus the image, rotate the focus ring (Figure 15) until the image is clear. To zoom the image, rotate the zoom ring. This adjusts the image size without affecting focus.

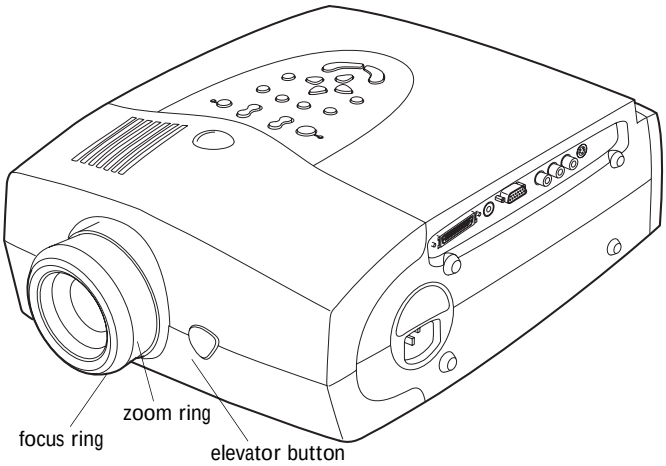

FIGURE 15

Focus ring, zoom ring, and elevator button

The projector is equipped with a self-locking, quick-release elevator foot and button (Figure 15) and a leveling knob (Figure 16).

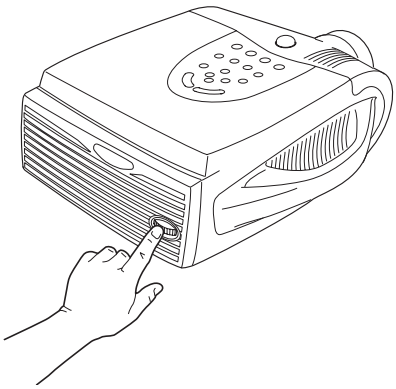

FIGURE 16

Leveling knob

To raise the projector:

1. Press and hold the elevator button (Figure 15).
2. Raise the projector to the height you want, then release the button to lock the elevator foot into position.
3. If necessary, use the leveling knob (Figure 16) to adjust the angle of the projected image.

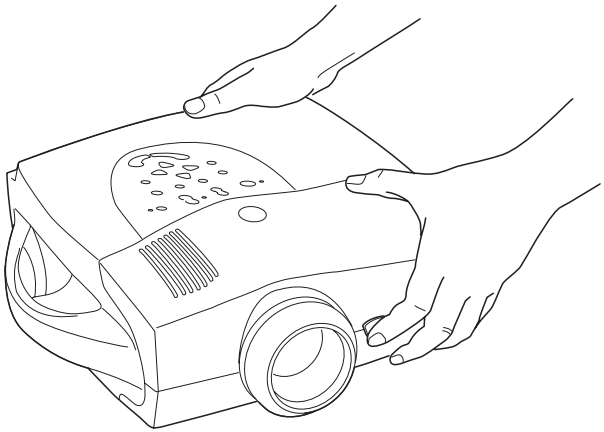

FIGURE 17

Adjusting the height of the projector

To lower the projector:

1. Press the elevator button.
2. Lower the projector.
3. If necessary, use the leveling knob (Figure 16) to readjust the angle of the projected image.

Using the Remote and Keypad Buttons

This section provides an alphabetical reference to the remote and keypad buttons.

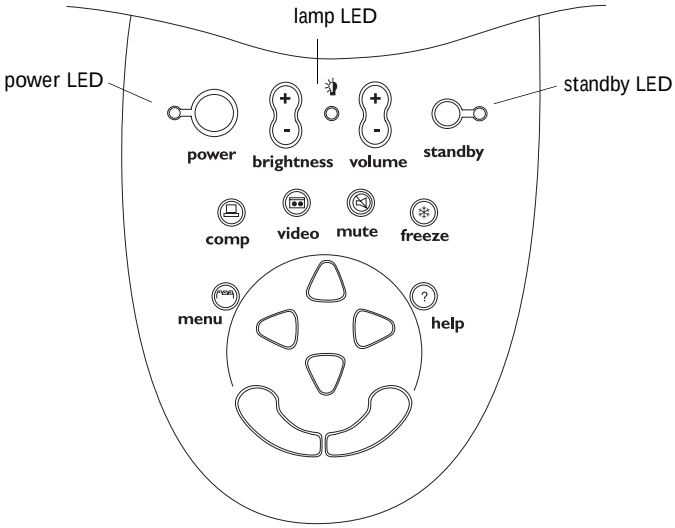

FIGURE 18

Keypad

FIGURE 19

Remote

Brightness + or -

Adjusting the brightness lightens or darkens the image.

- To darken the image, press **-**.
- To lighten the image, press **+**.

Computer

When you have more than one source (computer and video) connected to the projector, select between them by pressing the button for the source you want.

Press **computer** to display your computer image.

Freeze

The **freeze** button halts, or "freezes" the projected image. Use this button to freeze a frame of video (the video continues to run but the projected image is frozen). You can also freeze an image from a computer source on the screen, allowing you to perform other operations on the computer without the audience seeing them. Press **freeze** again when you want the image to return to normal.

Help (keypad only)

Press **help** to display the on-screen help information.

Laser (remote only)

CAUTION
LASER RADIATION – DO NOT STARE INTO BEAM
WAVE LENGTH: 670nm
MAX OUTPUT: < 1mW
CLASS II LASER PRODUCT

The laser button activates a laser beam that can be used as a pointing device. To use the laser, press and hold the laser button. The laser goes off when the button is released.

Menu

Press **menu** to open the on-screen menus. Press **menu** again to close the menus. When you close the menus, the projector saves any changes you made. For more information about the on-screen menus, see page 24.

Mute (keypad only)

Pressing the **mute** button silences the internal speaker. It also silences any external speakers that are connected.

To return the volume to its previous setting, press **mute** again or press either **volume** button.

Power

The Power button turns the projector on and off. When you plug the projector in, the fan runs on low speed and the Power LED lights after the projector has initialized. When the Power LED is lit, you can press the Power button to turn the lamp on.

When you press the Power button while the projector is on, the lamp stays on for 15 seconds before shutting off. If you press power again within 15 seconds, the projector returns to normal operation immediately. The fan continues to run until the projector is unplugged.

Standby

When you press **standby**, the display and audio turn off and a blank screen is displayed for 15 minutes. The Standby LED lights solid orange while the projector is in standby. After 15 minutes, the lamp goes out if you haven't pressed **standby** again. You can change the amount of time the projector stays in standby mode; see "Standby Time" on page 31 for details.

- If you press **standby** again within 15 minutes, the projector returns to normal operations immediately.
- If you press **standby** again after 15 minutes, there is about a 30 second delay before the lamp turns back on.

Video

When you have more than one source (computer and video) connected to the projector, select between them by pressing the button for the source you want.

Press **video** to display the image from your video player.

Volume + or -

- To increase the volume, press **+**.
- To decrease the volume, press **-**.

Volume adjustments are saved for each source you have connected.

Using the On-Screen Menus

The projector has six drop-down menus that allow you to make image adjustments and change a variety of settings. Most of these adjustments aren't available directly from the keypad or remote.

To open the on-screen menus, press the **menu** button on the keypad or remote. Press **menu** again when you want to close the menus and save any changes.

To select a menu, use the arrow keys on the keypad or disk mouse on the remote to move the cursor left and right to highlight the menu you want. The drop-down menu appears.

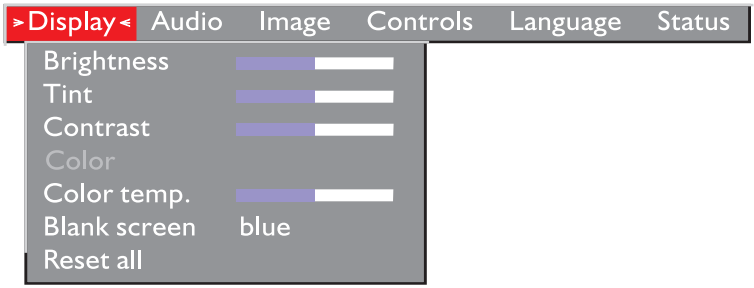

FIGURE 20

Drop-down menu

To change a menu setting, use the up and down arrow keys on the keypad or the disk mouse on the remote to move the cursor up and down to the item you want to change (the selected item is highlighted red), then use the left and right mouse buttons (not the left and right arrow buttons) to adjust a setting. Some submenus, such as Brightness, consist of a slider bar you use to increase or decrease a value; some submenus, such as Standby Time, consist of options you scroll through to select the desired one. All changes are saved when you close the menus.

To access another menu, use the left and right arrow buttons to move left or right to another menu.

Display Menu Functions

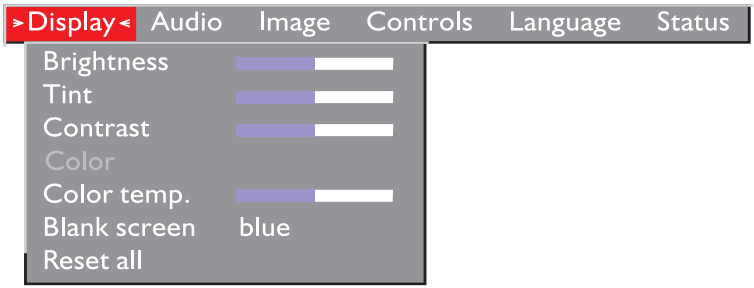

FIGURE 21

Display menu

Brightness

Adjusting the brightness changes the intensity of the image.

- Press the left mouse button to darken the image.
- Press the right mouse button to lighten the image.

Tint

The tint adjusts the red-green color balance in the projected image. Changing the Tint setting has no effect on PAL or SECAM video sources.

- Press the left mouse button to increase the amount of green in the image.
- Press the right mouse button to increase the amount of red in the image.

Contrast

The contrast controls the degree of difference between the lightest and darkest parts of the picture. Adjusting the contrast changes the amount of black and white in the image.

- Press the left mouse button to decrease the contrast.
- Press the right mouse button to increase the contrast, making the blacks appear blacker and the whites appear whiter.

Color

The color setting adjusts a video image from black and white to fully saturated color.

- Press the left mouse button to decrease the amount of color in the image.
- Press the right mouse button to increase the amount of color in the image.

Color Temperature

This setting adjusts the amount of red in the projected image.

- Press the left mouse button to decrease the amount of red in the image.
- Press the right mouse button to increase the amount of red in the image.

Blank Screen

Blank Screen determines what color is displayed when there is no active source and when the projector is in standby. Click the button to toggle between the two options.

Reset All

Click either mouse button to reset all the options (except Language, Video Standard, Ceiling and Rear Projection, and Standby Time) in all the menus to their original settings. This also returns Freeze and Mute to their default (off) settings.

Audio Menu Functions

FIGURE 22

Audio menu

Volume

- Press the left mouse button to decrease the volume.
- Press the right mouse button to increase the volume.

Volume adjustments you make are saved for each source.

Treble

The treble setting controls the higher frequencies of your audio source.

- Press the left mouse button to decrease the treble.
- Press the right mouse button to increase the treble.

Bass

The bass setting controls the lower frequencies of your audio source.

- Press the left mouse button to decrease the bass.
- Press the right mouse button to increase the bass.

NOTE: *Changing the volume from the menu is the same as changing it using the keypad or remote.*

NOTE: *The* ***Treble*** *and* ***Bass*** *settings apply only to the projector's internal speaker. External speakers typically have their own tone controls.*

Balance

The balance setting controls the balance between the left and right external speakers. It appears gray and won't highlight if you haven't connected external speakers. Balance applies to all sources you have connected.

- Press the left mouse button to increase the amount of sound coming from the left external speaker.
- Press the right mouse button to increase the amount of sound coming from the right external speaker.

Fade

The fade setting controls the balance between the internal and external speakers. The setting appears gray and won't highlight if external speakers aren't connected.

- Press the left mouse button to increase the amount of sound coming from the internal speaker.
- Press the right mouse button to increase the amount of sound coming from the external speakers.

Image Menu Functions

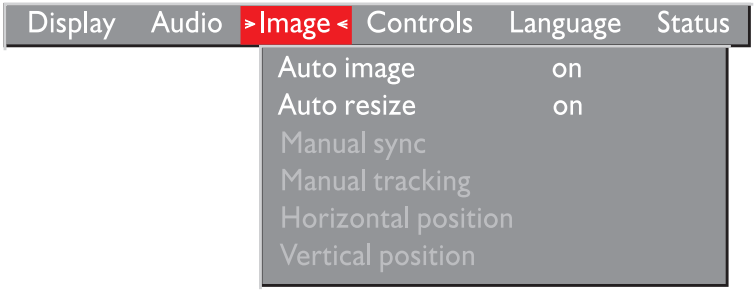

FIGURE 23

Image menu

Auto Image

The projector automatically adjusts tracking, signal synchronization and vertical and horizontal position for most computers. If you want to adjust these features manually, you must turn off **Auto Image** first by highlighting Auto Image in the Image menu and clicking either mouse button to select "off".

Auto Resize

Auto Resize automatically resizes the image by scaling it up or down.

When **Auto Resize** is on, the projector makes the best fit of the image to the screen. If you turn **Auto Resize** off, the image may be either cropped or too small for the screen.

Manual Sync

The projector adjusts signal synchronization automatically for most computers. But if the projected computer image looks fuzzy or streaked, try turning **Auto Image** off then back on again. If the image still looks bad, try adjusting the signal synchronization manually as described below.

1. Turn **Auto Image** off.
2. Press the left or right mouse buttons repeatedly until the image is sharp and free of streaks.

NOTE: *Some screen savers interfere with the operation of Auto Image. If you're experiencing problems, try turning your screen saver off, then turning Auto Image off and back on.*

*NOTE: The **Manual Sync**, **Manual Tracking**, **Horiz. Position** and **Vert. Position** buttons are available only for computer sources. The projector sets these options automatically for a video source.*

Manual Tracking

The tracking function adjusts the projector to match the video signal from your computer. The projector usually adjusts the tracking automatically when you connect your computer. However, if the display shows evenly spaced, fuzzy, vertical lines or if the projected image is too wide or too narrow for the screen, try turning **Auto Image** off then back on again. If the image is still bad, try adjusting the tracking manually as described below.

1. Turn **Auto Image** off.
2. Press the left or right mouse buttons repeatedly until the fuzzy vertical bars are gone.

Horiz. Position

Follow these steps to manually adjust the horizontal position.

1. Turn **Auto Image** off.
2. Press the left mouse button to move the image right; press the right mouse button to move the image left.

Positioning adjustments are saved when you power off the projector.

Vert. Position

Follow these steps to manually adjust the vertical position.

1. Turn **Auto Image** off.
2. Press the left mouse button to move the image down; press the right mouse button to move the image up.

Positioning adjustments are saved when you power off the projector.

Controls Menu Functions

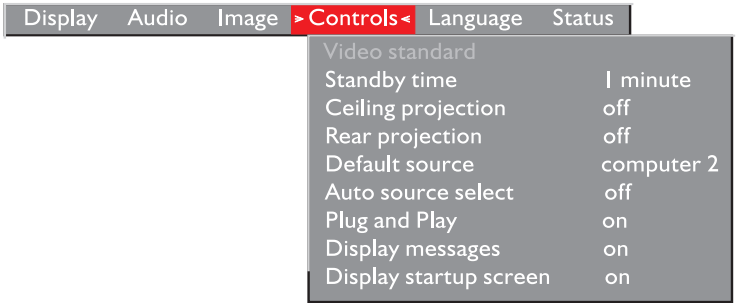

FIGURE 24

Controls menu

Video Standard

When **Auto** is on, the projector attempts to pick the video standard (NTSC, NTSC 4.43, PAL, PAL-M, PAL-N, or SECAM) automatically based on the input signal it receives. (The video standard options may vary depending on your region of the world.) The input signals for SECAM, PAL-M, and PAL-N video cannot be automatically detected, therefore they must be chosen manually. If the projector is unable to detect the standard, the colors might not look right or the image might appear "torn." If this happens, manually select a standard by clicking the button and cycling through the standards.

NOTE: *If you already know the video standard used in your geographical area, it's often best to manually select it.*

Standby Time

This option lets you select how long the lamp stays on and the blank screen is displayed when you enter standby mode before the projector turns off. Select among 1, 5, 10, and 15 minutes and 1 and 2 hours by clicking either mouse button and cycling through the options.

Ceiling Projection

- Click either mouse button to turn the image upside down for ceiling-mounted projection.

NOTE: *To order the Ceiling Mount, refer to "Optional Accessories" on page 50.*

Rear Projection

When you select **Rear Projection**, the projector reverses the image so you can project from behind a translucent screen.

Default Source

Default Source toggles between Computer and Video. This determines which source the projector checks first for active video during power-up. Click the button to toggle between the options.

Auto Source Select

This setting toggles between On and Off. When this feature is Off, the projector defaults to the source selected in Default Source. To display another source, you must manually select one by pressing the **computer** or **video** button on the keypad or remote. When this feature is On, the projector automatically finds the active source, checking the default source first. Click the button to toggle between the options.

Plug and Play

This setting toggles between On and Off. When it is On, most new computers will automatically recognize the projector, then set the monitor resolution and refresh rate accordingly. You need to set the Plug and Play setting to Off for the projector to display properly on some older computers. The Plug and Play setting does not affect video images.

If the projector display constantly changes between the computer image and the message, "Perfecting the image", you may need to set Plug and Play to Off.

Display Messages

This setting toggles between On and Off. When this feature is On, status messages such as “No signal detected” and “Standby” appear in the lower-right corner of the screen. Click the either mouse button to turn this feature off and not see status messages.

Display Startup Screen

This setting toggles between On and Off. When this feature is On, the startup screen appears when the projector starts up and remains until an active source is detected. Click the either mouse button to turn this feature off and display a plain black or blue screen instead of the startup screen.

Language menu

FIGURE 25

Language menu

You can display the on-screen menus in English, French, German, and Spanish. The default is English.

- Move the cursor to the language you want, then click the either mouse button. The menus redraw immediately.

Status menu

This is a read-only menu for informational purposes. To display the status window, select Show status from the menu, then click either mouse button. To remove the window, click either mouse button.

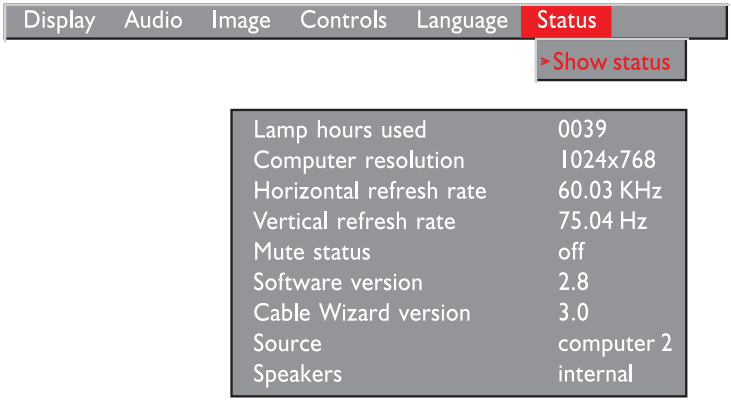

FIGURE 26

Status menu

Lamp hours used
Indicates how many hours the current lamp has been in use. The counter starts at zero hours and counts each hour the lamp is in use. When the counter reaches 3000 hours, the lamp monitor light turns on. For optimum results, the lamp should be replaced at this time. See “Replacing the Projection Lamp” on page 37 for details.

Computer resolution
Shows your computer’s resolution setting. To change this, go to your computer’s Control Panel and adjust the resolution in the Display tab. See your computer’s user’s guide for details.

Horizontal refresh rate
The time period that one horizontal line is displayed.

Vertical refresh rate
The time period that one video frame is displayed.

Mute status
Indicates if the audio is muted.

Software ver.
Indicates the projector’s software version. This information is useful when contacting Technical Support.

CablePro ver.
Indicates the CablePro’s software version. This information is useful when contacting Technical Support.

Source
Indicates the active source, Computer 1 (CablePro), Computer 2 (VESA input) or Video.

Speakers
Indicates if internal or external speakers are active.

MAINTENANCE & TROUBLESHOOTING

This section describes how to:

- clean the lens
- clean the fan intake filter
- replace the projection lamp
- replace the batteries in the remote control
- use the Kensington lock feature
- troubleshoot the projector

Cleaning the Lens

Follow these steps to clean the projection lens:

1. Apply a non-abrasive camera lens cleaner to a soft, dry cloth.
   - Avoid using an excessive amount of cleaner.
   - Abrasive cleaners, solvents or other harsh chemicals might scratch the lens.
2. Lightly wipe the cleaning cloth over the lens.
3. If you don't intend to use the projector immediately, replace the lens cap.

Cleaning the Fan Intake Filter

The fan intake filter on the bottom of the projector catches dust and particles in the air. If the filter becomes clogged, the projector does not cool properly and may malfunction. To prevent this, clean the filter after every 100 hours of use.

1. Turn off the power and unplug the power cord.
2. Remove the lamp door.
   - Remove the screw on the outside of the lamp door.
   - Pull the lamp door up and remove it.

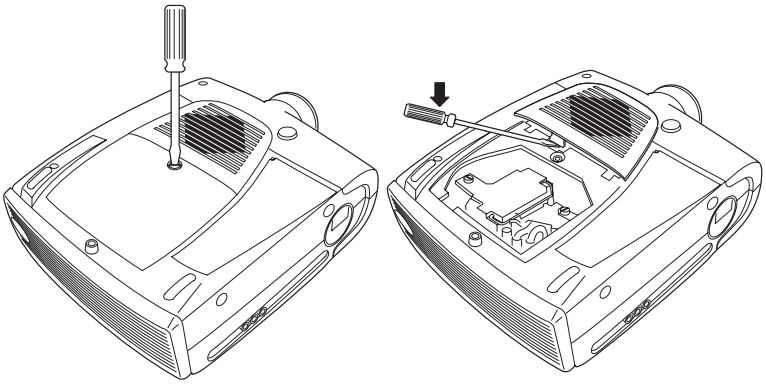

FIGURE 27

Removing the lamp and filter doors

3 Using a screwdriver or your hand, push the tab on the filter door forward and lift the door out.

4 Clean the filter.

- Use a vacuum cleaner set on low power to remove the dust and dirt.

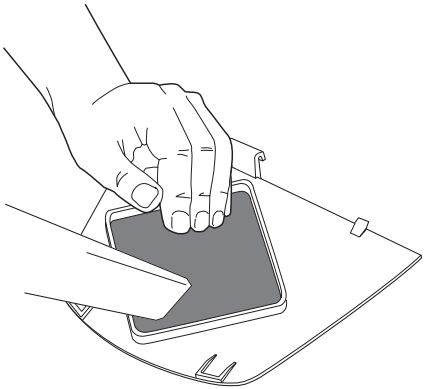

FIGURE 28

Cleaning the air filter

5 Replace the filter.

- First, insert the side with the tabs, then press the other end in place.

Replacing the Projection Lamp

The lamp hour counter on the status bar at the top of the menus counts the number of hours the lamp has been in use. After 3000 hours of use, the lamp monitor LED, marked on the top of the projector near the keypad, lights yellow. For optimum results, the lamp should be replaced at this time. You can order new lamp modules from Boxlight. See “Accessories” on page 49 for information.

Follow these steps to replace the projection lamp:

1. Turn off the projector and unplug the power cord.
2. Wait 30 minutes to allow it to cool thoroughly.
3. Using a small, flat-blade screwdriver, loosen the screw on the outside of the lamp door (Figure 29).
4. Pull the lamp cover up and remove it.

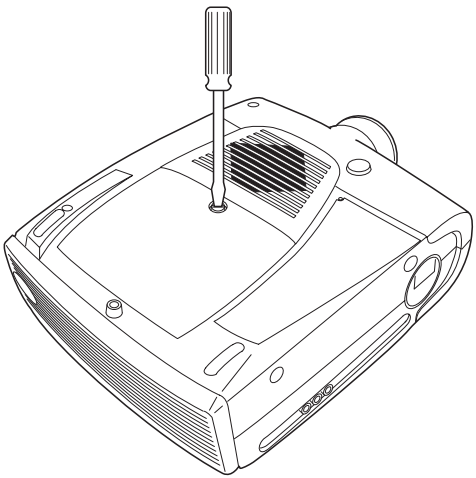

FIGURE 29

Removing the lamp module door

WARNING: *To avoid burns, allow the projector to cool for at least 30 minutes before you open the lamp module door. Never extract the lamp module while the lamp is operating.*

CAUTION: *Never operate the projector with the lamp cover open or removed. This disrupts the air flow and causes the projector to overheat.*

5 Loosen the two non-removable screws on the outside of the module (Figure 30).

6 Remove the module (Figure 30).

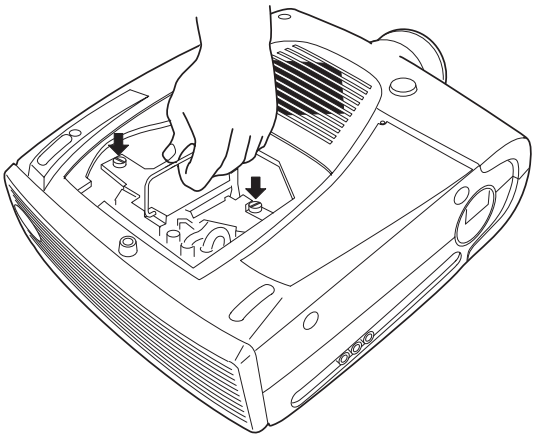

FIGURE 30

Removing the lamp module

WARNING: *Do not drop the lamp module or touch the glass bulb! The glass may shatter and cause injury.*

7 Align the new lamp module in the correct direction.

8 Gently push the module in as far as it goes.

9 Tighten the screws on the outside of the module.

10 Reposition the lamp cover.

11 Tighten the lamp door screw.

12 Plug in the power cord and turn the projector back on. The lamp monitor light and lamp hour counter in the Status menu are automatically reset.

Replacing the Batteries in the Remote Control

The life of the batteries depends on how often and how long you use the remote. Symptoms of low battery charge include erratic responses when using the remote and a reduced range of operation.

Follow these steps to replace the batteries:

1. Turn the remote face down in your hand.
2. Slide the battery cover off the end of the remote by pressing on it with the heel of your hand.
3. Remove the old batteries.
4. Install two new AA alkaline batteries. Make sure you install each in the correct direction.
5. Slide the battery cover back on the remote.

Using the Kensington Lock

The projector has a Kensington Security Standard connector for use with a Kensington MicroSaver Security System (Figure 31). Refer to the information that came with the Kensington System for instructions on how to use it to secure the projector.

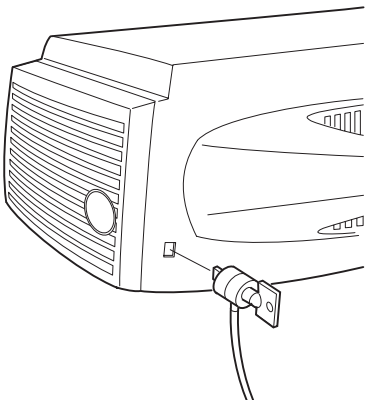

FIGURE 31

Installing the Kensington lock

Troubleshooting

If you're experiencing trouble with the projector, follow these steps to make sure everything is properly connected before you call Technical Support for assistance.

1. Check cable connections. Verify that all computer, CablePro and power cables are properly connected.
2. Verify that all power is switched on.
3. Verify that the projector has not been switched off with the **standby** button on the keypad.
4. If the projector still doesn't display an image, restart the computer.
5. If the problem still exists, unplug the projector from the computer and check the computer monitor's display. The maximum resolution that the projector can display is 1280x1024 pixels, preferably 1024x768. The problem might be with the graphics controller in your computer rather than with the projector. When you reconnect the projector, remember to turn the computer and monitor off before you power up the projector. Power the equipment back up in this order: projector, monitor, computer.
6. If you're using a laptop computer and it is not displaying your presentation, make sure you have activated the computer's external video output. Most laptop computers do not automatically turn on their external video port when a secondary display device such as a projector is connected. Refer to page 51 for more information.
7. If the problem still exists, read through the problems and solutions in this chapter.

NOTE: *Macintosh computers require a specific power-up sequence: the projector must be turned on before you turn on the computer.*

Solutions to Common Problems

Problem: Nothing on projection screen

- Make sure that the power cord is properly connected to a functional AC electrical outlet. Make sure that the power cord is also properly connected to the projector.
- If the projector is plugged into a power strip, make sure the power strip is turned on.
- Make sure you have removed the lens cap from the projection lens at the front of the projector.
- Make sure the projector is switched on.
- Check the projector's lamp to ensure that it is securely connected in the lamp module. See "Replacing the Projection Lamp" on page 37.
- Make sure that the CablePro and the cables do not have any bent pins. Check the power cord for bent pins also.

Problem: Color or text not being projected

- You might need to adjust the brightness up or down until the text is visible. Refer to "Brightness + or -" on page 22 for more information.
- Verify that the appropriate input source is selected. See "Computer" on page 22 or "Video" on page 23.

Problem: The screen resolution is not right

- Make sure the computer's graphics card is set for a resolution of no greater than 1280x1024.

Problem: Image isn't centered on the screen

- Reposition the image. Refer to "Horiz. Position" on page 30 and "Vert. Position" on page 30.
- If you're using an extension cable between the CablePro and the projector, make sure it's Boxlight-approved.

Problem: Only the start-up screen displays

- Verify that the cables are connected correctly. Check to see that the CablePro computer cable is correctly connected to the monitor connector on the computer (this is the connector where your monitor cable usually goes.) See page 6 for connection procedures.
- Verify that the proper input source is connected. See "Computer" on page 22 or "Video" on page 23.
- You might need to turn everything off and power up the equipment again. Make sure you power up in this order: projector, computer monitor, computer. It is especially important that you follow this sequence for Macintosh computers.
- Make sure your computer's graphics board is installed and configured correctly.

  If you're using Windows 3.x:

  1. In the Windows Program Manager, double-click the Windows Setup icon in the Main program group.
  2. Verify that the Display setting is 1280x1024 or less.

  If you're using Windows 95 or 98:

  1. Open "My Computer" icon, the Control Panel folder and then the Display icon.
  2. Click the Settings tab.
  3. Verify that the Desktop area is set to 1280x1024 or less.

Also check the following:

- Does your computer have a compatible graphics board? The projector isn't CGA or EGA compatible.
- Is your computer's graphics board turned on? This is especially true for laptop computers. See "Portable and Laptop Activation Chart" on page 51.

Problem: Image is too wide or narrow for screen

- You might need to manually adjust the tracking to reduce or enlarge the projected image. Refer to “Manual Tracking” on page 30.
- Adjust the resolution of your monitor if it’s greater than 1280x1024. Only this resolution at 75 Hz or less will display on the projector.

Problem: Image is out of focus

- Turn the projection lens to focus the image.
- Make sure the projection screen is at least 4 feet (1.2m) from the projector.
- Make sure the projector is turned off, then check the projection lens to see if it needs cleaning.

Problem: Image and menus are reversed left to right

- Rear projection mode is probably turned on. Switch back to forward projection from the Controls menu. The image should immediately return to forward projection. See “Rear Projection” on page 31.

Problem: Image and menus are upside down

- Ceiling mode is probably turned on. Turn off the mode from the Controls menu. The image should immediately return to forward projection. See “Ceiling Projection” on page 31.

Problem: the projector displays vertical lines, “bleeding” or spots

- Adjust the brightness. See “Brightness + or -” on page 22.
- Make sure the projector is turned off, then check the projection lens to see if it needs cleaning.

Problem: no sound

- Press the mute button.
- Adjust volume.
- Verify audio/input connections.
- Adjust audio source.

Problem: Image is "noisy" or streaked

Try these steps in this order.

1. Deactivate the screen saver on your computer.
2. Turn **Auto Image** off and then back on again. See "Auto Image" on page 29.
3. Adjust the synchronization and tracking manually to find an optimal setting. See "Manual Sync" on page 29 and "Manual Tracking" on page 30.

- If you're using an extension cable between the CablePro and the projector, make sure it's Boxlight-approved.
- The problem could be with your computer's graphics board. If possible, connect a different computer.

Problem: Projected colors don't match the computer or video player's colors

- Adjust the brightness, tint and / or contrast from the Display menu. Just as there are differences in the displays of different monitors, there are often differences between the computer image and the projected image. See "Brightness + or -" on page 22, "Color" on page 26 and "Contrast" on page 25.

Problem: Lamp seems to be getting dimmer

- The lamp begins to lose brightness when it has been in use for a long time. Replace the lamp as described in "Replacing the Projection Lamp" on page 37.

Problem: Lamp shuts off

- A minor power surge may cause the lamp to shut off. Turn the projector off, wait at least 30 seconds, then turn it back on.

Problem: Remote not operating correctly

- You might need to replace the batteries. See "Replacing the Batteries in the Remote Control" on page 39.
- Make sure you're pointing the remote either at the back or front of the projector, or at the projection screen.
- Make sure the remote is within its operating range of 25 feet.

Before calling Boxlight for assistance, please have the following information available:

- the projector's serial number (located on the bottom label)
- the resolution of your computer.

Call Boxlight at **1-800-762-5757**.

APPENDIX

Specifications

The projector must be operated and stored within the temperature and humidity ranges specified.

Temperature	
Operating	10 C to 40° C
Non-operating	-20 to 70° C

Humidity	
Operating and non-oper.	5% to 95% relative humidity, non-condensing

Dimensions	
	5.2 x 11.7 x 14.7 inches (13 x 29.5 x 36.7 cm)

Weight	
unpacked	9.7 pounds (4.4kg)

Altitude	
Operating	0 to 10,000 feet (3048 meters)
Non-operating	0 to 40,000 feet (12,192 meters)

Optics	
Focus Range	4-40 feet (1.2-12m)

Lamp	
Type	120-watt UHE

Remote Control	
Battery	Two (2) AA alkaline cells
Laser	Class II laser product; wavelenght 670nm; maximum output 1mW

Input Power Requirements
100/120VAC, 5.0/5.0A, 50/60 Hz 230 VAC, 3A, 50Hz

Video Audio Input

Input Impedance	5K ohm DC coupled
Maximum Input Voltage	$(L_{IN} + R_{IN})_{PEAK} < 4.5$ V for THD $\leq 0.3\%$ L_{IN} or $R_{IN} < 2.0$ Vrms for THD $\leq 0.3\%$
Sensitivity	100 mV at 1 KHz for 88 dB SPL at 1 meter
Connector Type	RCA jack

CablePro Audio Input

Input Impedance	10K ohm nominal, AC coupled
Maximum Input Voltage	$(L_{IN} + R_{IN})_{PEAK} < 4.5$ V for THD $\leq 0.3\%$ L_{IN} or $R_{IN} < 2.0$ Vrms for THD $\leq 0.3\%$
Sensitivity	100 mV at 1 KHz for 88 dB SPL at 1 meter
Connector Type	3.5 mm (1/8 inch) stereo phone jack

Audio Output

Frequency Response	10 Hz - 20 KHz
Output Impedance	1.2 K ohm nominal
Output Voltage	2 Vrms maximum (open circuit)
Connector Type	red and white RCA jacks

Accessories

Standard Accessories (ship with the projector)

MP-350m Quick Start card

MP-350m User's Guide

Shipping Box

CablePro and Cables

- CablePro Audio Cable
- CablePro USB Mouse Cable
- CablePro PS/2 Mouse Cable

VESA Cable (HD 15 to HD15, 6 ft)

VESA Audio Cable (6 ft)

Projection Lamp Module

Lens Cap

Audio/Video Cable

Remote Control and 2 Batteries

Power Cords (one ships with projector, type depends on country)

North American Power Cord

Australian Power Cord

UK Power Cord

European Power Cord

Danish Power Cord

Swiss Power Cord

NOTE: *Use only Boxlight-approved accessories. Other products have not been tested with the projector.*

Optional Accessories

- Easy Carry Case
- Soft Case
- Hard Travel Case
- Deluxe Travel Case
- ATA Shipping Case
- CablePro Lite, 6.5 ft (2 m)
  - Mac Adapter
- CablePro Extension Cable, non-plenum rated, 60.7 ft (18.5 m)
- CablePro Extension Cable, plenum-rated, 60.7 ft (18.5m)
- CablePro Installation Extension Cable, 70.5 ft
- Kensington MicroSaver Security System
- Rhapsody II Speakers
- JBL Subwoofer
- Portable Projector Stand
- S-Video Cable
- Ceiling Mount
  - False Ceiling Plate
  - Pipe Tubing Extension
  - CablePro Wall Plate
- 3rd Year Extended Warranty (1 year extension)

Portable and Laptop Activation Chart

Many laptop computers do not automatically turn on their external video port when a secondary display device such as a projector is connected. Activation commands for some laptop computers are listed in the following table. (If your computer is not listed or the given command does not work, refer to the computer's documentation for the appropriate command.) On some laptops, the activation function key is labeled with an icon, for example ⊟/▢ or the text CRT/LCD.

Computer	Key command to activate port	Key command to de-activate port
Acer	Ctrl-Alt-Esc (for setup)	Ctrl-Alt-Esc (for setup)
AST* **	FN-D or Ctrl-D Ctrl-FN-D FN-F5 type from A:/IVGA/CRT FN-F12	FN-D or Ctrl-D Ctrl-FN-D FN-F5 type from A:/IVGA/CRT FN-F12
Advanced Logic Research	Ctrl-Alt-V	Ctrl-Alt-V
Altima	Shift-Ctrl-Alt-C setup VGA/ Conf.Simulscan	Shift-Ctrl-Alt-L setup VGA/ Conf.Simulscan
Ambra**	FN-F12 FN-F5 F2/Choose Option/F5	FN-F12 FN-F5 F2/Choose Option/F5
Amrel* **	setup menu Shift-Ctrl-D	setup menu Shift-Ctrl-D
Apple	see Mac Portable and Mac PowerBook	
Aspen	automatic	automatic
BCC*	automatic	reboot computer
Bondwell	LCD or CRT options after bootup	reboot for LCD or CRT options to appear
Chaplet**	setup screen FN-F6 FN-F4	setup screen FN-F6 FN-F4
Commax	Ctrl-Alt-#6	Ctrl-Alt-#5

NOTE: *Often, pressing the key commands once activates the external video port, pressing it again activates both the external and internal ports, and pressing it a third time activates the internal port. Refer to your computer's documentation for details on your specific model.*

Computer	Key command to activate port	Key command to de-activate port
Compaq* **	Ctrl-Alt-<	Ctrl-Alt->
	FN-F4	FN-F4
	automatic	automatic
	mode/? (for setup option)	mode/? (for setup option)
Compuadd* **	automatic	automatic
	Alt-F for screen setup option	Alt-F for screen setup option
Data General	Ctrl-Alt-Command	Ctrl-Alt-Command
Data General Walkabout	2 CRT/X at DOS prompt	reboot
Datavue	Ctrl-Shift-M	Ctrl-Shift-M
Dell**	Ctrl-Alt-<	Ctrl-Alt->
	Ctrl-Alt-F10	Ctrl-Alt-F10
	FN-F8 (CRT/LCD)	FN-F8
	FN-D	FN-D
	FN-F12	FN-F12
Digital*	automatic	reboot
	FN-F2	FN-F2
Dolch	dip switch to CRT	dip switch to LCD
Epson	dip switch to CRT	dip switch to LCD
Everex*	setup screen option	setup screen option
For-A	Ctrl-Alt-Shift-C	Ctrl-Shift-Alt-L
Gateway	FN-F1/FN-F1 again simultaneous	FN-F1
Grid* **	FN-F2, choose auto or simultaneous	FN-F2
	Ctrl-Alt-Tab	Ctrl-Alt-Tab
Hyundai	setup screen option	setup screen option
IBM 970*	automatic	warm reboot

Computer	Key command to activate port	Key command to de-activate port
IBM ThinkPad**	reboot, enter setup menu	FN-F2
	FN-F7, select choice from setup menu	
	FN-F1, select choice	
	FN-F5, select choice	
	PS/2 SC select choice (CRT, LCD, etc.)	
Kaypro	boot up, monitor plugged in	unplug monitor
Kris Tech	FN-F8	FN-F8
Mac Portable 100	no video port: not compatible	
Mac PowerBook		
140, 145, 150, 170	no video port: requires a 3rd-party interface	
160, 165, 180, 520, 540, 5300	Control Panel folder, PowerBook Display folder; Activate Video Mirroring	warm reboot
210, 230, 250, 270, 280, 2300	requires Apple Docking Station or Mini Dock	
Magitronic	FN-F4	FN-F4
Mastersport	FN-F2	FN-F1
Micro Express*	automatic	warm reboot
Microslate*	automatic	warm reboot
Mitsubishi	SW2 On-Off-Off-Off	SW2 Off-On-On-On
NCR	setup screen option	setup screen option
NEC* **	setup screen option	setup screen option
	CRT at the DOS prompt	LCD at the DOS prompt
	FN-F31	FN-F3
Olivetti*	automatic	automatic
	FN-O/*	FN-O/*
	FN- | |	FN- | |

Computer	Key command to activate port	Key command to de-activate port
Packard Bell**	FN-F2 Ctrl-Alt-<	FN-F2 Ctrl-Alt->
Panasonic	FN-F2	FN-F2
Samsung*	setup screen option	setup screen option
Sanyo	setup screen option	setup screen option
Sharp	dip switch to CRT	dip switch to LCD
Sun SPARC-Dataview	Ctrl-Shift-M	Ctrl-Shift-M
Tandy**	Ctrl-Alt-Insert setup screen option	Ctrl-Alt-Insert setup screen option
Texas Instruments*	setup screen option	setup screen option
Top-Link* **	setup screen option FN-F6	setup screen option FN-F6
Toshiba* **	Ctrl-Alt-End FN-End FN-F5 setup screen option	Ctrl-Alt-Home FN-Home FN-F5 setup screen option
Twinhead*	FN-F7 FN-F5 Automatic	FN-F7 FN-F5 Automatic
WinBook	Ctrl-Alt-F10	Ctrl-Alt-F10
Wyse	software driven	software driven
Zenith**	FN-F10 FN-F2 FN-F1	FN-F10 FN-F2 FN-F1

* These manufacturers have models that automatically send video to the external CRT port when some type of display device is attached.

** These manufacturers offer more than one key command depending on the computer model.

Using Video Mirroring with a PowerBook Computer

When you turn video mirroring on (called SimulScan in newer PowerBooks-see below), the projector displays the same information that appears on your PowerBook's built-in screen. When video mirroring is off, the projector acts like a separate display.

To turn on video mirroring for the first time:

1. Open the Monitors control panel; click on Monitor 2.
2. Set the number of colors you want.
3. Open the Control Strip; click on the monitor icon.
4. Select "Turn Video Mirroring On."

Now you can turn video mirroring on and off from the Control Strip without having to open the Monitors control panel again.

When using video mirroring and high color graphics such as slide shows, the projected image occasionally might turn black and white. If this happens, perform the following steps:

1. Turn off video mirroring.
2. Open the Monitors control panel.
3. Move the white menu bar to Monitor 2 to set the projector as the primary monitor.
4. Restart the PowerBook.

Using SimulScan

Some newer PowerBooks display images on an external monitor or projector differently than previous ones. When using SimulScan, the projector displays the same information that appears on your PowerBook

To select SimulScan:

1. Open the Control Panel, then double-click Monitors and Sound.
2. In the Resolution list, choose the SimulScan mode, then click OK.
3. If this changes your display settings, a dialog box appears. Click OK to confirm the change.

Projected Image Size

Use the chart below and the tables on the next page to help you determine projected image sizes.

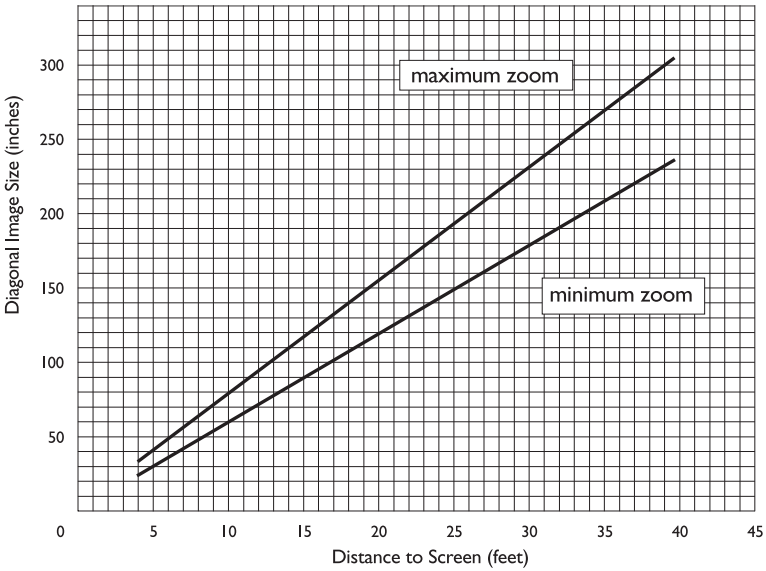

FIGURE 32

Projected image size

Table 1:
Image Size, Width and Height for Lens at Maximum Image Size

Distance to Screen (feet)	Diagonal (inches)	Width (inches)	Height (inches)
4	31	25	19
10	77	62	46
15	115	92	69
20	154	123	92
25	192	154	115
30	230	184	138
35	269	215	161
40	307	246	184

Table 2:
Image Size, Width and Height for Lens at Minimum Image Size

Distance to Screen (feet)	Maximum Diagonal (inches)	Maximum Width (inches)	Maximum Height (inches)
4	24	19	14
10	59	47	35
15	88	70	53
20	118	94	71
25	147	118	88
30	176	141	106
35	206	165	124
40	235	188	141

INDEX

A

accessories, ordering 49, 50
activation commands for laptop computers 51
adjusting
    balance 28
    bass 27
    brightness 22, 25
    color 26
    contrast 25
    fade 28
    tint 26
    treble 27
    volume 23, 27
adjusting the height of the projector 19
altitude limits 47
assistance. See Technical Support
Audio menu 27
Audio menu options
    Balance 28
    Bass 27
    Fade 28
    Treble 27
    Volume 27
Auto Source Select 32

B

balance, adjusting 28
bass, adjusting 27
Blank Screen 26
Brightness buttons 22
brightness, adjusting 22, 25
buttons on keypad and remote
    Brightness 22
    Computer 22
    Freeze 22
    Help 22
    Laser 22
    Menu 22
    Mute 22
    Power 23
    Standby 23
    Video 23
    Volume 23

C

CablePro
    cables 6, 49
    connecting to equipment 7
    connecting to the projector 6
    extension cable 50
CablePro Lite, ordering 50
cables
    A/V 13, 49
    CablePro 6, 49
    CablePro extension 50
    composite video 13
    extension 5, 50
    ordering 49, 50
    power 49
    remote control 50
    S-video 13, 50
cases, ordering 50
ceiling-mounted projection 31, 50
cleaning the projection lens 35

color temperature 26
color, adjusting 26
colors
    don't match monitor colors 44
    not displayed 41
compatibility
    IBM-compatible 1
    Macintosh 1
composite video cable
    connecting 13
    ordering (A / V cable) 49
Computer button 22
computers, compatible 1
connecting
    external speakers 15
    IBM-compatible desktop computer 10–11
    IBM-compatible laptop 8–9
    power cord 15
    video player 13–14
connector panel
    audio out 7
contrast, adjusting 25
Controls menu 31
Controls menu options
    Auto Source Select 32
    Ceiling 31
    Default Source 32
    Display Messages 32
    Display Startup Screen 32
    Plug and Play 32
    Rear Projection 31
    Standby Time 31
    Video Standard 31

D

Default Source 32
Display menu 25
Display menu options
    Blank Screen 26
    Brightness 25
    Color 26
    Color temperature 26
    Contrast 25
    Reset All 26
    Tint 26
Display Messages 32
Display Startup Screen 32
displaying
    on-screen help information 22
    on-screen menus 22
    startup screen 32
    status messages 32

E

extension cable 5, 50
external speakers, connecting 15

F

fade, adjusting 28
filter, cleaning 35
Freeze button 22
freezing the display 22
fuzzy lines 30

H

Help button 22

I

IBM-compatible computers
- compatibility 1
- connecting 8–11

icons
- on CablePro 6
- on the projector 3, 7

image
- adjusting 15, 17
- centering 17, 30
- colors don't match computer's 44
- focusing 19
- fuzzy lines 17, 30
- has lines or spots 43
- not centered 41
- not displayed 41
- out of focus 43
- quality 41–44
- resolution 1
- reversed 31, 43
- size 5, 56
- streaked 44
- too dark or too light 22
- too wide or too narrow 17, 43

Image menu 29

Image menu options
- Auto Image 29
- Auto Resize 29
- Horiz. Position 30
- Manual Sync 29
- Manual Tracking 30
- Vert. Position 30

intake filter, cleaning 35

K

Kensington lock 39, 50

L

lamp
- LED 37
- ordering 49
- replacing 37
- turns off unexpectedly 44

lamp hour counter 34

Language menu 33

language, selecting for menus 33

laptop computers
- activation sequence to allow secondary display 51
- connecting IBM-compatible 8

laser pointer 22

LEDs
- lamp 37
- power 15
- standby 23

lens
- cap 49
- cleaning 35

leveling the projector 19

M

Macintosh computers
- compatibility 1

Menu 22

Menu button 22, 24

menus. See on-screen menus

monitor, projected colors don't match 44

MP-350m
- cases 50
- ceiling mounted 5, 31
- not working 40
- project from behind the screen 31
- setting up 5
- specifications 47
- turning off 16
- turning on 15

Mute button 22

N

NTSC video 31

O

on-screen menus
- Audio menu 27
- changing language of 33
- Controls menu 31
- Display menu 25
- displaying 24
- Image menu 29
- making changes to menu functions 24
- removing from the screen 24

P

PAL video 25, 31
Plug and Play 32
power button 16
power cord
- connecting 15
- ordering 49

power strip 15
power up sequence 15, 42
project from behind the screen 31

R

rear projection 31
remote control
- not working 44
- ordering 49
- replacing the batteries 39
- specifications 47
- using 17

replacing
- projection lamp module 37

re-positioning the image on the screen 30
resetting adjustments 26
resolution 1

S

safety guidelines iii
SECAM video 25, 31
security feature 39
SimulScan, using with PowerBooks 55
speakers
- external 15, 22, 50
- internal 22
- muting 22

specifications 47
Standby button 23
Standby Time 31
start-up screen 15, 42
Status menu 33
S-video
- connecting 13
- ordering cable 50

T

Technical Support
- information to have on hand before you call 45
- things to try before you call 40

temperature limits 47
text not visible 41
tint, adjusting 25, 26
treble, adjusting 27
troubleshooting 40
turning off
- projector 16
- sound 22

turning on the projector 15

U

using the remote control 17

V

vertical lines displayed 30, 43
VESA cable 49
Video button 23
video mirroring on a PowerBook 55
video standards 25, 31
volume
- adjusting 23, 27
- muting 22

Volume buttons 23

W

warranty 4, 50

LIMITED WARRANTY

Boxlight Corporation (“Boxlight”) warrants that each MP-350m (“the Product”) sold hereunder will conform to and function in accordance with the written specifications of Boxlight. Said limited warranty shall apply only to the first person or entity that purchases the Product for personal or business use and not for the purpose of distribution or resale. The product may contain recycled components that are in new condition. Said warranty shall continue for a period of two (2) years from the date of such purchase. The standard limited warranty excludes the lamps in projectors after 90 days and the accessories after one year. Boxlight does not warrant that the Product will meet the specific requirements of the first person or entity that purchases the Product for personal or business use. Boxlight’s liability for the breach of the foregoing limited warranty is limited to the repair or replacement of the Product or refund of the purchase price of the Product, at Boxlight’s sole option. To exercise the Purchaser’s rights under the foregoing warranty, the Product must be returned at the Purchaser’s sole cost and expense, to Boxlight or to any authorized Boxlight service center provided, however, that the Product must be accompanied by a written letter explaining the problem and which includes (i) proof of date of purchase; (ii) the dealer’s name; and (iii) the model and serial number of the Product. When sending your unit in for repair, please ship your unit in its original packing material or a Boxlight-approved ATA Shipping Case, or have a professional packaging company pack the unit. Please insure your shipment for its full value. A return authorization number, issued by the Boxlight customer service department, must also be clearly displayed on the outside of the shipping carton containing the Product.

WARRANTY LIMITATION AND EXCLUSION

Boxlight shall have no further obligation under the foregoing limited warranty if the Product has been damaged due to abuse, misuse, neglect, accident, unusual physical or electrical stress, unauthorized modifications, tampering, alterations, or service other than by Boxlight or its authorized agents, causes other than from ordinary use or failure to properly use the Product in the application for which said Product is intended.

DISCLAIMER OF UNSTATED WARRANTIES

THE WARRANTY PRINTED ABOVE IS THE ONLY WARRANTY APPLICABLE TO THIS PURCHASE. ALL OTHER WARRANTIES, EXPRESS OR IMPLIED, INCLUDING, BUT NOT LIMITED TO, THE IMPLIED WARRANTIES OF MERCHANTABILITY AND FITNESS FOR A PARTICULAR PURPOSE ARE DISCLAIMED. THERE ARE NO WARRANTIES THAT EXTEND BEYOND THE FACE HEREOF AND THE FOREGOING WARRANTY SHALL NOT BE EXTENDED, ALTERED OR VARIED EXCEPT BY WRITTEN INSTRUMENT SIGNED BY BOXLIGHT.

LIMITATION OF LIABILITY

IT IS UNDERSTOOD AND AGREED THAT BOXLIGHT’S LIABILITY WHETHER IN CONTRACT, IN TORT, UNDER ANY WARRANTY, IN NEGLIGENCE OR OTHERWISE SHALL NOT EXCEED THE RETURN OF THE AMOUNT OF THE PURCHASE PRICE PAID BY PURCHASER AND UNDER NO CIRCUMSTANCES SHALL BOXLIGHT BE LIABLE FOR SPECIAL, INDIRECT OR CONSEQUENTIAL DAMAGES OR LOST PROFITS, LOST REVENUES OR LOST SAVINGS. THE PRICE STATED FOR THE PRODUCT IS A CONSIDERATION IN LIMITING BOXLIGHT’S LIABILITY. NO ACTION, REGARDLESS OF FORM, ARISING OUT OF THE AGREEMENT TO PURCHASE THE PRODUCT MAY BE BROUGHT BY PURCHASER MORE THAN ONE YEAR AFTER THE CAUSE OF ACTION HAS ACCRUED.

Part Number 010-0197-00