DRAFT

USER'S GUIDE

Matinee 2HD HOME THEATER PROJECTOR

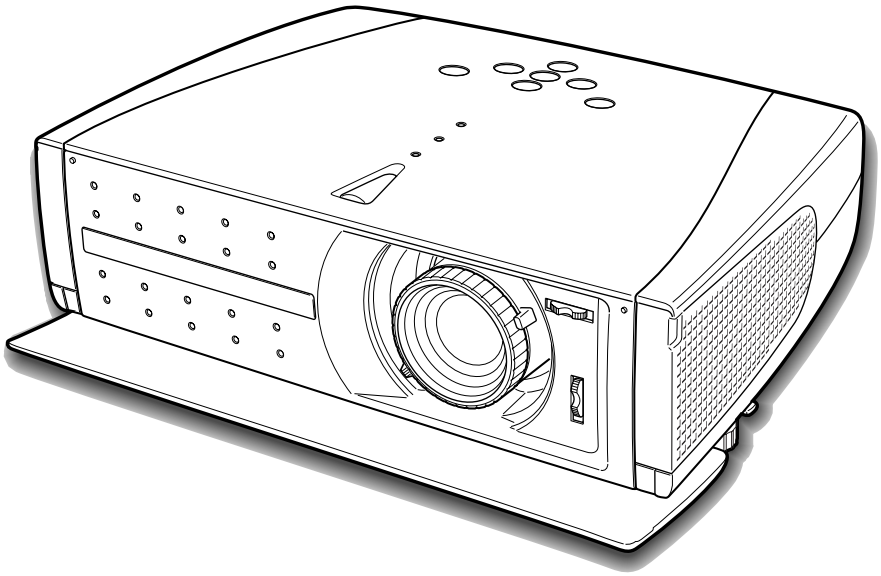

Table of Contents

Table of Contents 2

To the Owner 3

Safety Instructions 4

Air Circulation 5
Installing the Projector in Proper Position 5
Moving the Projector 5

Compliance 6

Connecting the AC Power Cord 7

Features and Design 8

Part Names and Functions 9

Front 9
Back 9
Bottom 9
Terminal 10
Top 11
Remote Control 12
Remote Control Operating Range 13
Remote Control Batteries Installation 13

Installation 14

Positioning the Projector 14
Adjustable Feet 14
Moving the Lens 15
Connecting to Video Equipment (Video, S-Video) 16
Connecting to Video Equipment (Component, DVI compatible with HDCP) 16
Connecting to Video Equipment (RGB Scart) 17
Connecting to a Computer 17

Basic Operation 18

Turning On the Projector 18
Turning Off the Projector 18
Zoom Adjustment 19
Focus Adjustment 19
Aperture (Contrast) Adjustment 19
Keystone Adjustment 20
My Picture Function 20
No Show Function 20
On-Screen Menu 21
Menus 22

Video Input 23

Input Source Selection (INPUT 1 Terminal/Video, S-Video, Component) 23
Input Source Selection (INPUT 2 Terminal/HDCP, Component, Scart) 25
Video System Selection 26
Image Level Selection 27
Image Level Adjustment 28
Screen Size Adjustment 30

Computer Input 31

Input Source Selection 31
Computer System Selection 32
Computer Adjustment (Auto) 33
Computer Adjustment (Manual) 34
Image Level Selection 36
Image Level Adjustment 37
Screen Size Adjustment 38

Setting 39

Setting 39

Maintenance and Cleaning 42

Warning Indicator 42
Cleaning the Air Filter 43
Replacing the Air Filter 43
Cleaning the Projection Lens 44
Cleaning the Projector Cabinet 44
Lamp Replacement 45
Lamp Replace Counter 46

Appendix 47

Troubleshooting 47
Indicators and Projector Condition 49
Menu Tree 50
Compatible Computer Specifications 52
Technical Specifications 53
Dimensions 54
Configurations of Terminal 55
Optional Parts 55

TRADEMARKS

- Apple, Macintosh, and PowerBook are trademarks or registered trademarks of Apple Computer,Inc.
- IBM, VGA, XGA, and PS/2 are trademarks or registered trademarks of International Business Machines, Inc.
- Windows and PowerPoint are registered trademarks of Microsoft Corporation.
- Each name of corporations or products in the user's guide is a trademark or a registered trademark of its respective corporation.

To the Owner

Before operating this projector, read this manual thoroughly and operate the projector properly.
This projector provides many convenient features and functions. Operating the projector properly enables you to manage those features and maintains it in better condition for a considerable time.
Improper operation may result in not only shortening the product-life, but also malfunctions, fire hazard, or other accidents.
If your projector seems to operate improperly, read this manual again, check operations and cable connections and try the solutions in the "Troubleshooting" section in the end of this booklet. If the problem still persists, contact BOXLIGHT.

CAUTION

RISK OF ELECTRIC SHOCK
DO NOT OPEN

CAUTION : TO REDUCE THE RISK OF ELECTRIC SHOCK, DO NOT REMOVE COVER (OR BACK). NO USER-SERVICEABLE PARTS INSIDE EXCEPT LAMP REPLACEMENT. REFER SERVICING TO QUALIFIED SERVICE PERSONNEL.

THIS SYMBOL INDICATES THAT DANGEROUS VOLTAGE CONSTITUTING A RISK OF ELECTRIC SHOCK IS PRESENT WITHIN THIS UNIT.

THIS SYMBOL INDICATES THAT THERE ARE IMPORTANT OPERATING AND MAINTENANCE INSTRUCTIONS IN THE USER'S GUIDE WITH THIS UNIT.

Safety Precaution

WARNING : TO REDUCE THE RISK OF FIRE OR ELECTRIC SHOCK, DO NOT EXPOSE THIS APPLIANCE TO RAIN OR MOISTURE.

– This projector produces intense light from the projection lens. Do not stare directly into the lens as it could possibly damage your eyes. Be especially careful that children do not stare directly into the beam.

– Install the projector in a proper position. If not, it may result in a fire hazard.

– Provide appropriate space on the top, sides and rear of the projector cabinet for allowing air circulation and cooling the projector. Minimum clearance must be maintained. If the projector is to be built into a compartment or similarly enclosed, the minimum distances must be maintained. Do not cover the ventilation slot on the projector. Heat build-up can reduce the service life of your projector, and can also be dangerous.

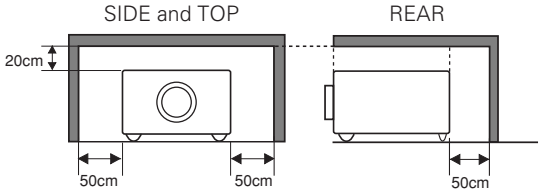

– Do not put any flammable object or spray can near the projector, hot air is exhausted from the ventilation holes.

– If the projector is not to be used for an extended time, unplug the projector from the power outlet.

READ AND KEEP THIS USER'S GUIDE FOR LATER USE.

CAUTION

Not for use in a computer room as defined in the Standard for the Protection of Electronic Computer/Data Processing Equipment, ANSI/NFPA 75.

Ne puet être utillisé dans une salle d'ordinateurs telle que définie dans la norme ANSI/NFPA 75 Standard for Protection of Electronic Computer/Data Processing Equipment

Safety Instructions

All the safety and operating instructions should be read before the product is operated.

Read all of the instructions given here and retain them for later use. Unplug this projector from AC power supply before cleaning. Do not use liquid or aerosol cleaners. Use a damp cloth for cleaning.

Follow all warnings and instructions marked on the projector.

For added protection to the projector during a lightning storm, or when it is left unattended and unused for long periods of time, unplug it from the wall outlet. This will prevent damage due to lightning and power line surges.

Do not expose this unit to rain or use near water... for example, in a wet basement, near a swimming pool, etc...

Do not use attachments not recommended by the manufacturer as they may cause hazards.

Do not place this projector on an unstable cart, stand, or table. The projector may fall, causing serious injury to a child or adult, and serious damage to the projector. Use only with a cart or stand recommended by the manufacturer, or sold with the projector. Wall or shelf mounting should follow the manufacturer's instructions, and should use a mounting kit approved by the manufacturers.

An appliance and cart combination should be moved with care. Quick stops, excessive force, and uneven surfaces may cause the appliance and cart combination to overturn.

Slots and openings in the back and bottom of the cabinet are provided for ventilation, to insure reliable operation of the equipment and to protect it from overheating.

The openings should never be covered with cloth or other materials, and the bottom opening should not be blocked by placing the projector on a bed, sofa, rug, or other similar surface. This projector should never be placed near or over a radiator or heat register.

This projector should not be placed in a built-in installation such as a book case unless proper ventilation is provided.

Never push objects of any kind into this projector through cabinet slots as they may touch dangerous voltage points or short out parts that could result in a fire or electric shock. Never spill liquid of any kind on the projector.

Do not install the projector near the ventilation duct of air-conditioning equipment.

This projector should be operated only from the type of power source indicated on the marking label. If you are not sure of the type of power supplied, consult your authorized dealer or local power company.

Do not overload wall outlets and extension cords as this can result in fire or electric shock. Do not allow anything to rest on the power cord. Do not locate this projector where the cord may be damaged by persons walking on it.

Do not attempt to service this projector yourself as opening or removing covers may expose you to dangerous voltage or other hazards. Refer all servicing to qualified service personnel.

Unplug this projector from wall outlet and refer servicing to qualified service personnel under the following conditions:

a. When the power cord or plug is damaged or frayed.
b. If liquid has been spilled into the projector.
c. If the projector has been exposed to rain or water.
d. If the projector does not operate normally by following the operating instructions. Adjust only those controls that are covered by the operating instructions as improper adjustment of other controls may result in damage and will often require extensive work by a qualified technician to restore the projector to normal operation.
e. If the projector has been dropped or the cabinet has been damaged.
f. When the projector exhibits a distinct change in performance-this indicates a need for service.

When replacement parts are required, be sure the service technician has used replacement parts specified by the manufacturer that have the same characteristics as the original part. Unauthorized substitutions may result in fire, electric shock, or injury to persons.

Upon completion of any service or repairs to this projector, ask the service technician to perform routine safety checks to determine that the projector is in safe operating condition.

Voor de klanten in Nederland

Bij dit product zijn batterijen geleverd.
Wanneer deze leeg zijn, moet u ze niet weggooien maar inleveren als KCA.

Air Circulation

Openings in the cabinet are provided for ventilation and to ensure reliable operation of the product and to protect it from overheating, and these openings must not be blocked or covered.

CAUTION

Hot air is exhausted from the exhaust vent. When using or installing the projector, the following precautions should be taken.

– Do not put any flammable objects near the vent.
– Keep the exhaust vent at least 1.5'(50cm) away from any objects.
– Do not touch a peripheral part of the exhaust vent, especially screws and metallic part. This area will become hot while the projector is being used.
– Do not put anything on the cabinet. The materials put on the cabinet will not only get damaged but also cause fire hazard by heat.

Cooling fans are provided to cool down the projector. This projector monitors internal temperature and control the running speed of the cooling fans.

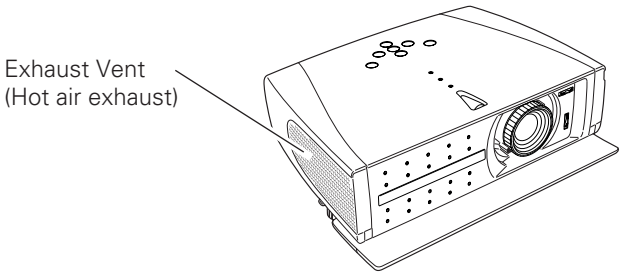

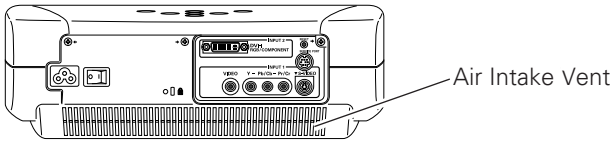

Installing the Projector in Proper Position

Install the projector properly. Improper Installation may reduce the lamp lifetime and cause a fire hazard.

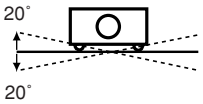

Do not tilt the projector more than 20 degrees to either side.

NO DOWNWARD

Do not point the projector down to project an image.

NO SIDEWARD

Do not put the projector on either side to project an image.

Moving the Projector

When moving the projector, close the front cover and retract the adjustable feet to prevent damage to the lens and cabinet. When the projector is not in use for an extended period, put it into a suitable case.

CAUTION IN CARRYING OR TRANSPORTING THE PROJECTOR

– Do not drop or bump a projector, otherwise damages or malfunctions may result.
– When carrying a projector, use a suitable carrying case.
– Do not transport a projector by using a courier or transport service in an unsuitable transport case. This may cause damage to a projector. To transport a projector through a courier or transport service, consult your Boxlight dealer for best way.

Federal Communication Commission Notice

Note : This equipment has been tested and found to comply with the limits for a Class B digital device, pursuant to part 15 of the FCC Rules. These limits are designed to provide reasonable protection against harmful interference in a residential installation. This equipment generates, uses and can radiate radio frequency energy and, if not installed and used in accordance with the instructions, may cause harmful interference to radio communications. However, there is no guarantee that interference will not occur in a particular installation. If this equipment does cause harmful interference to radio or television reception, which can be determined by turning the equipment off and on, the user is encouraged to try to correct the interference by one or more of the following measures :

- Reorient or relocate the receiving antenna.
- Increase the separation between the equipment and receiver.
- Connect the equipment into an outlet on a circuit different from that to which the receiver is connected.
- Consult the dealer or an experienced radio/TV technician for help.

Use of shielded cable is required to comply with class B limits in Subpart B of Part 15 of FCC Rules.

Do not make any changes or modifications to the equipment unless otherwise specified in the instructions. If such changes or modifications should be made, you could be required to stop operation of the equipment.

Model Number	: Matinee 2HD
Trade Name	: Boxlight
Responsible party	: BOXLIGHT
Address	: 19332 Powder Hill Place Poulsbo, WA 98370-7407 USA
Telephone No.	: (800)762-5757 or +1-360-779-7901

AC POWER CORD REQUIREMENT

The AC Power Cord supplied with this projector meets the requirement for use in the country you purchased it.

AC Power Cord for the United States and Canada :

AC Power Cord used in the United States and Canada is listed by the Underwriters Laboratories (UL) and certified by the Canadian Standard Association (CSA).
AC Power Cord has a grounding-type AC line plug. This is a safety feature to be sure that the plug will fit into the power outlet. Do not try to defeat this safety feature. Should you be unable to insert the plug into the outlet, contact your electrician.

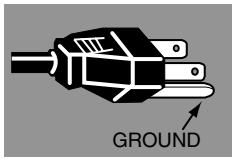

THE SOCKET-OUTLET SHOULD BE INSTALLED NEAR THE EQUIPMENT AND EASILY ACCESSIBLE.

Connecting the AC Power Cord

This projector uses nominal input voltages of 100-120 V or 200-240 V AC. This projector automatically selects the correct input voltage. It is designed to work with single-phase power systems having a grounded neutral conductor. To reduce risk of electrical shock, do not plug into any other type of power system.
Consult your authorized dealer or service station if you are not sure of the type of power being supplied.
Connect the projector with all peripheral equipment before turning the projector on. (See page 16-17 for connection.)

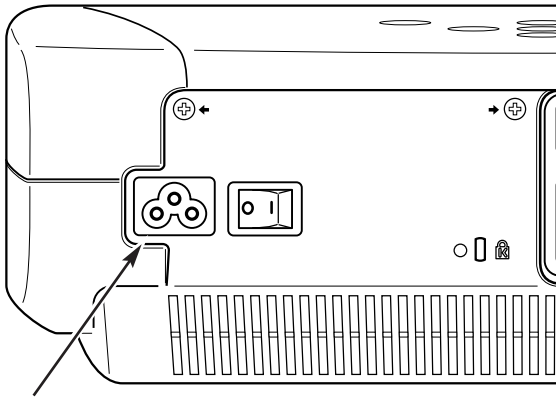

Connect AC power cord (supplied) to the projector.
The AC outlet must be near this equipment and must be easily accessible.

CAUTION

For safety, unplug AC power cord when the projector is not in use.
When this projector is connected to the outlet with AC power cord and the Main On/Off switch is on, it is in Stand-by mode and consumes a little electric power. Turn the Main On/Off switch off when the projector is not in use.

NOTE ON THE POWER CORD

The AC Power Cord must meet the requirement of the country where you use the projector.
Confirm the AC plug type with the chart below. The proper AC Power Cord must be used.
If the supplied AC Power Cord does not match the AC outlet, contact your sales dealer.

Projector side	AC Outlet side	
	For the U.S.A. and Canada	**For Continental Europe**
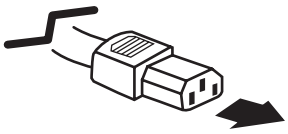 To the POWER CORD CONNECTOR on the projector.	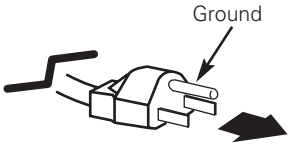 To the AC Outlet. **(120 V AC)**	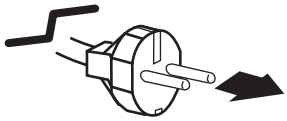 To the AC Outlet. **(200 - 240 V AC)**

Features and Design

This Multimedia Projector is designed with the most advanced technology for portability, durability, and ease of use. This projector utilizes built-in multimedia features, a palette of 16.77 million colors, and matrix liquid crystal display (LCD) technology.

◆ Short Zoom Lens

This projector is equipped with Short Zoom Lens which allows you to enjoy 100" screen size in range of 9.8' (3.0m) to 13.1' (4.0m).

◆ Lens Shift

The Lens Shift function gives you less limitation in positioning the projector. You can use it at desired places without a distorted image.

◆ Aperture (Contrast) Adjustment

Contrast can be adjusted not only through menu operation but also by the aperture lever. (See page 19.)

◆ Compatibility

The projector widely accepts various video and computer input signals including;

- **Computers**
  IBM-compatible or Macintosh computer up to 1280 x 1024 resolution.
- **6 Color Systems**
  NTSC, PAL, SECAM, NTSC 4.43, PAL-M or PAL-N color system can be connected.
- **Component Video**
  Component video signal, such as a DVD player output high definition TV signals including 480i, 480p, 575i, 575p, 720p, 1035i or 1080i, can be connected.
- **S-Video**
  S-Video signal, such as a S-VHS VCR output signal, can be connected.
- **RGB Scart**
  RGB Scart signal can be connected.

◆ Simple Computer System Setting

The projector has the Multi-scan system to conform to almost all computer output signals quickly. (See page 32.)

◆ 16 : 9 Wide Screen

The projector is equipped with LCD panels (1280 x 720 resolution) of 16 : 9 ratio so that you can project the image from component video signal such as a DVD player and high definition TV in a full screen.

◆ Interlace Progressive Conversion

High-quality picture is available with this technology which converts interlace signal into progressive signal. (See page 29.)

◆ Keystone Adjustment

Keystone distortion can be corrected not only vertically but also horizontally. The keystone correction function enables you to use the projector where you wish to use. (See page 20 and 39.)

◆ Power Management

The Power management function reduces power consumption and maintain the lamp life. (See page 40.)

◆ My Picture

A projected image can be captured and used for the starting display of the projector with the Capture function. You can also display the captured image whenever you want to with the MY PICTURE (MY-P) button on the remote control. (See page 12, 39, 40.)

◆ Lamp Mode

Brightness of the projection lamp can be changed by setting. The projector has the function to adjust the brightness according to an input signal for the best suited image. (See page 41.)

◆ Multilanguage Menu Display

Operation menu is available in; English, German, French, Italian, Spanish, Portuguese, Dutch, Swedish, Russian, Chinese, Korean, or Japanese. (See page 39.)

◆ Digital Visual Interface

The projector is equipped with DVI 29-pin terminal for connecting DVI output from a computer or video equipment. You can also enjoy digital entertainment content protected by HDCP technology. (See page 25 for HDCP.)

◆ Illumination Buttons

The remote control has a light switch and luminous buttons that emit light to be used easily in a dark place. (See page 12.)

Part Names and Functions

Front

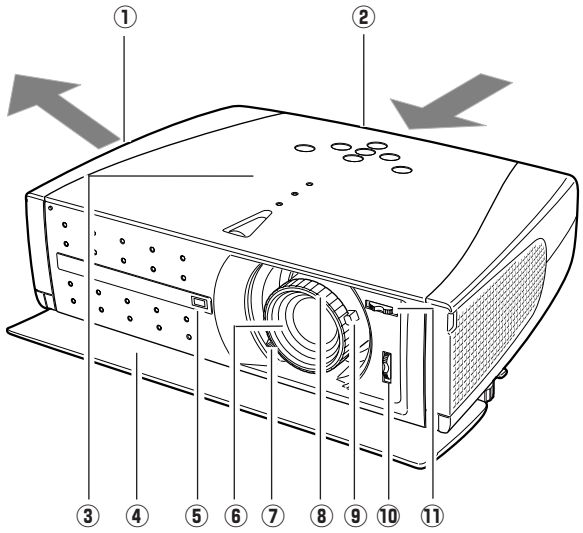

① **Exhaust Vent**

CAUTION

Hot air is exhausted from the exhaust vent. Do not put heat-sensitive objects near this side.

② **Air Intake Vent** (The two arrows show air flow.)

③ **Top Controls and Indicators**

④ **Front Cover**

⑤ **Infrared Remote Receiver**

⑥ **Projection Lens**

⑦ **Zoom Lever**

⑧ **Focus Ring**

⑨ **Aperture Lever**

⑩ **Lens Shift Ring (Up/Down)**

⑪ **Lens Shift Ring (Left/Right)**

Back

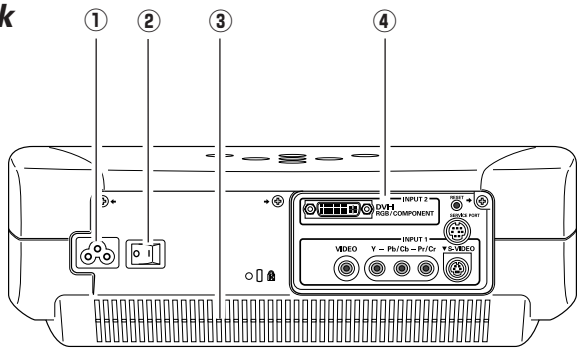

① **Power Cord Connector**

② **Main On/Off Switch**

③ **Air Intake Vent**

④ **Terminals and Connectors**

Bottom

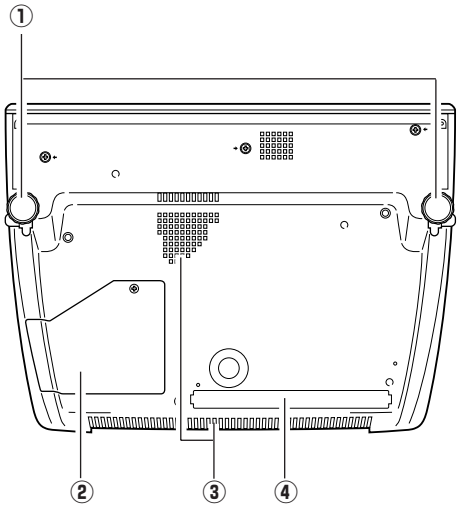

① **Adjustable Feet**

② **Lamp Cover**

③ **Air Intake Vent (back and bottom)**

④ **Air Filter**

Terminal

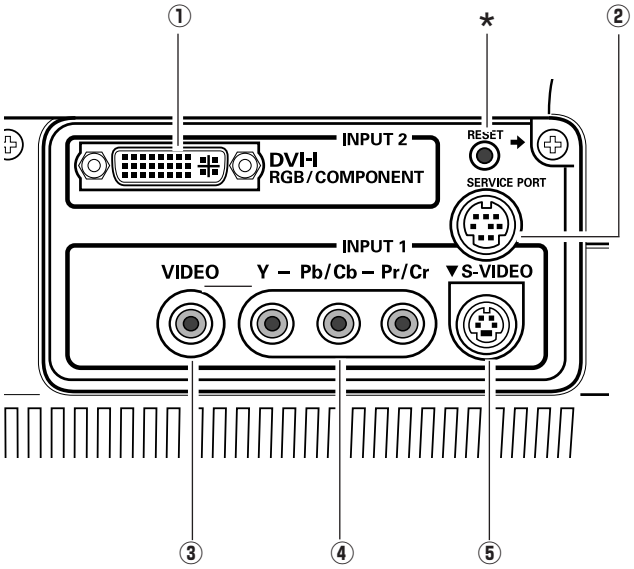

① **DVI-I RGB/COMPONENT**
Connect computer output (Digital/Analog DVI-I type), component video output, or RGB Scart 21-Pin video output to this terminal. (p16, 17)

② **SERVICE PORT**
This jack is used to service this projector.

③ **VIDEO**
Connect the composite video output from video equipment to this jack. (p16)

④ **Y - Pb/Cb - Pr/Cr**
Connect the component video output to these jacks. (p16)

⑤ **S-VIDEO**
Connect the S-Video output from video equipment to this jack. (p16)

* A built-in micro processor which controls this unit may occasionally malfunction and need to be reset. This can be done by pressing the RESET button with a pen, which will shut down and restart the unit. Do not use the RESET function excessively.

Top

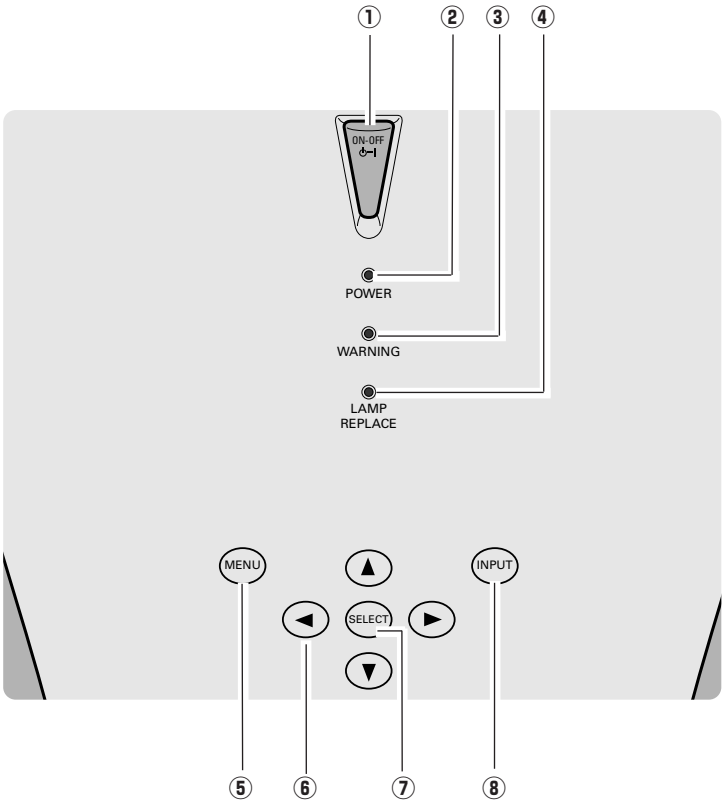

① **POWER ON–OFF button**
Turns the projector on or off. (p18)

② **POWER indicator**
Flashes red until the projector gets ready to be turned on or when the front cover is closed. It lights red when the projector is in the stand-by mode. It remains green while the projector is under operation.

③ **WARNING indicator**
Lights red when the projector detects abnormal condition. This also flashes red when the internal temperature of the projector exceeds the operating range. (p42)

④ **LAMP REPLACE indicator**
Turns yellow when the life of the projection lamp draws to an end. (p45)

⑤ **MENU button**
Opens or closes the On-Screen Menu. (p21)

⑥ **POINT (Up▲/Down▼/Left◀/Right▶) button**
Selects an item or adjusts value in the On-Screen Menu. These are also used to pan the image in the Digital zoom mode. (p38)

⑦ **SELECT button**
Executes the item selected. It is also used to expand / compress the image in Digital zoom mode. (p38)

⑧ **INPUT button**
Selects input source. (p23, 31)

Remote Control

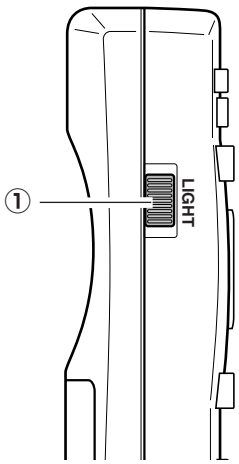

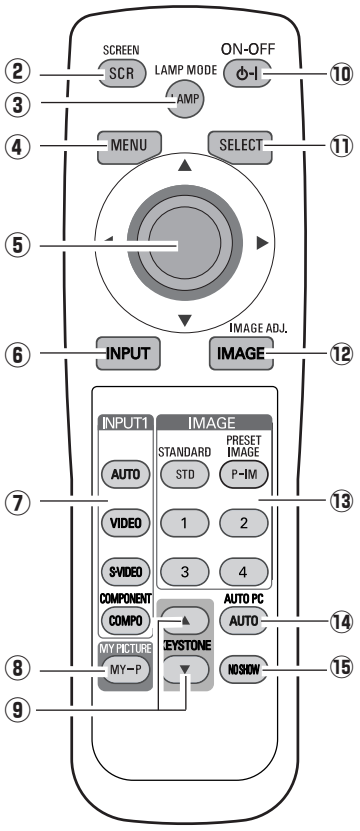

① **LIGHT switch**
Slides upward and lights the following buttons for about 10 seconds: SCREEN, ON-OFF, LAMP, MENU, SELECT, INPUT, and IMAGE ADJ.

② **SCREEN button**
Selects a screen size. (p30, 38)

③ **LAMP button**
Selects a lamp mode. (p41)

④ **MENU button**
Opens or closes the On-Screen Menu. (p21)

⑤ **POINT (UP/DOWN/LEFT/RIGHT) button**
Selects an item or adjusts value in the On-Screen Menu. These are also used to pan the image in the Digital zoom mode. (p38)

⑥ **INPUT button**
Selects input source. (p23, 31)

⑦ **INPUT1 buttons**
Selects video input source. (p23)

⑧ **MY PICTURE button**
Displays the captured image. (p40)

⑨ **KEYSTONE button**
Corrects keystone distortion. (p20, 39)

⑩ **POWER ON-OFF button**
Turns the projector on or off. (p18)

⑪ **SELECT button**
Executes the item selected, or to expand or compress image in the Digital zoom mode. (p38)

⑫ **IMAGE ADJ. button**
Displays the On-Screen Menu of the Image Adjust Menu in a line and adjusts image level. You can directly adjust an item. (p28, 29, 37)

⑬ **IMAGE buttons**
Selects an image level.(p27, 36)

⑭ **AUTO PC button**
Operates the Auto PC adjustment function. (p33)

⑮ **NO SHOW button**
Turns the picture into black image. (p20)

Luminous Buttons (⑦, ⑧, ⑨, ⑬, ⑭, ⑮)
Luminous buttons (⑦, ⑧, ⑨, ⑬, ⑭, ⑮) emit light in a dark place after they are put under light for a while.

Remote Control Operating Range

Point the remote control toward the projector (Infrared Remote Receiver) whenever pressing any button. Maximum operating range for the remote control is about 16.4′ (5m) and 60° in front of the projector.

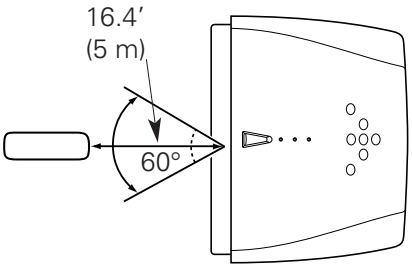

Remote Control Batteries Installation

1 Remove the battery compartment lid.

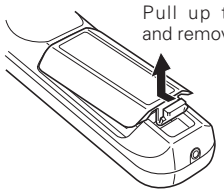

2 Slide the batteries into compartment.

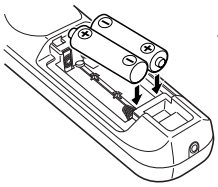

Two AA size batteries
For correct polarity (+ and –), be sure battery terminals are in contact with pins in compartment.

3 Replace the compartment lid.

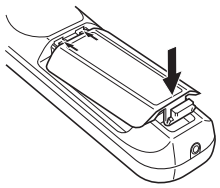

* When the batteries of the remote control are replaced, the remote control code automatically returns to the initial code (Code 1)(p41).

To insure safe operation, please observe the following precautions :

- Use (2) AA, UM3 or R06 type alkaline batteries.
- Replace two batteries at the same time.
- Do not use a new battery with a used battery.
- Avoid contact with water or liquid.
- Do not expose the remote control to moisture, or heat.
- Do not drop the remote control.
- If a battery has leaked on remote control, carefully wipe case clean and install new batteries.
- Risk of explosion if battery is replaced by an incorrect type.
- Dispose of used batteries according to the instructions.

Positioning the Projector

This projector is designed to project on a flat projection surface and can be focused from 3.9'(1.2m) - 20.0'(6.1m). Refer to the figure and the table below for the screen size and the distance between the projector and the screen.

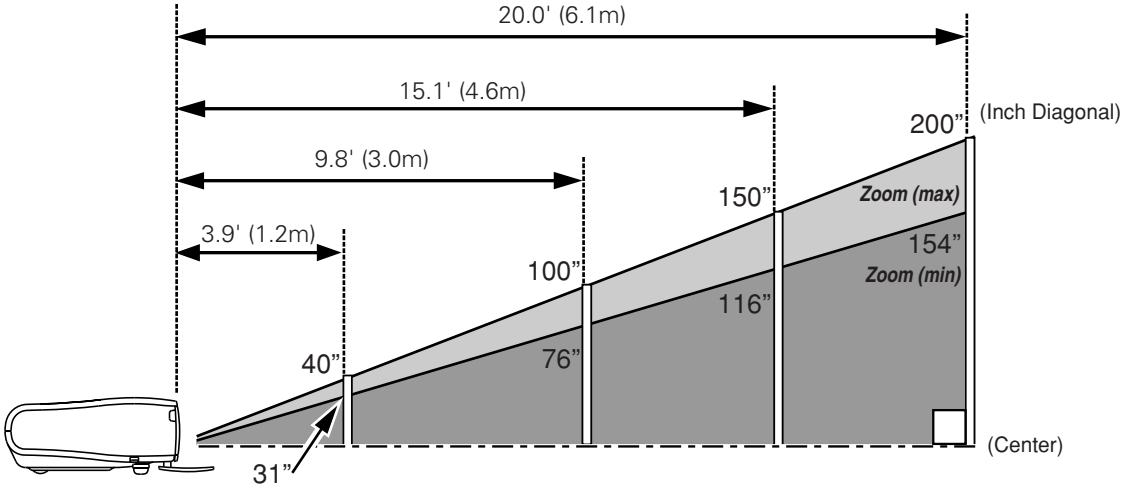

Screen Size (W x H) mm 16 : 9 aspect ratio	31″	40″	100″	150″	200″
	686 x 386	884 x 497	2209 x 1244	3314 x 1866	4419 x 2489
Zoom (min)	3.9' (1.2m)	5.2' (1.6m)	13.1' (4.0m)	19.3' (5.9m)	——
Zoom (max)	——	3.9' (1.2m)	9.8' (3.0m)	15.1' (4.6m)	20.0' (6.1m)

NOTE

- *The brightness in a room has a great influence on picture quality. It is recommended to limit ambient lighting in order to provide the best image.*
- *The values shown are approximate and may vary from the actual size.*

Adjustable Feet

Projection angle can be adjusted up to 11.8 degrees with the adjustable feet.

1. Lift the front of the projector and pull the feet lock latches on both sides of the projector.
2. Release the feet lock latches to lock the adjustable feet and rotate the adjustable feet to adjust the position and tilt.
3. To retract the adjustable feet, lift the front of the projector and pull and undo the feet lock latches.
   Keystone distortion of the projected image can be adjusted by menu operation. (p20, 39)

CAUTION

Tilt the projector within the adjustable range in order not to shorten the life of the lamp. Proper angle should be taken. See page 5.

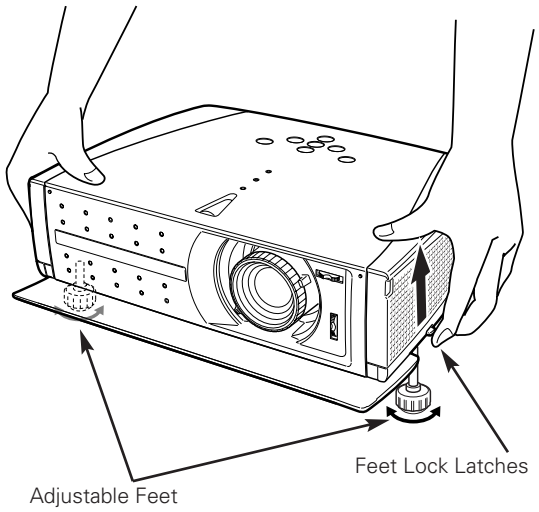

Moving the Lens

The projection lens can be moved up, down, left, and right with the manual lens shift function. This function makes it easy to provide a projected image where you want.

Turn the lens shift ring (left/right) left/right to move the lens leftward / rightward.
Turn the lens shift ring (up/down) up/down to move the lens upward / downward.

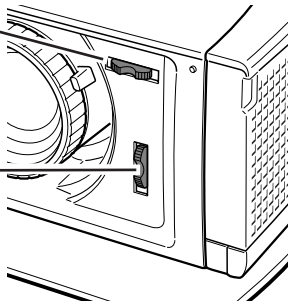

Lens Shift Up/Down

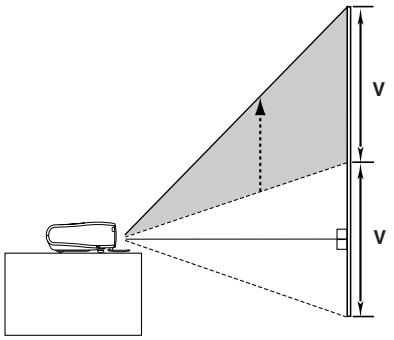

uppermost

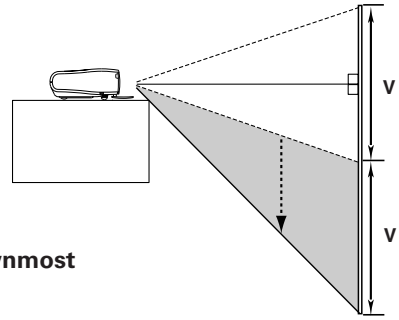

downmost

Lens Shift Left/Right

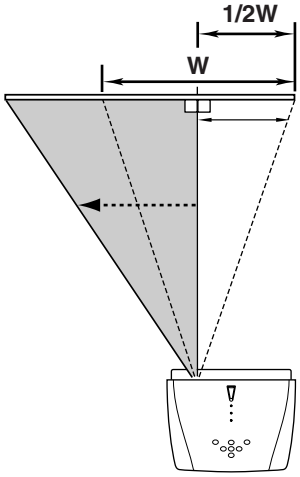

leftmost

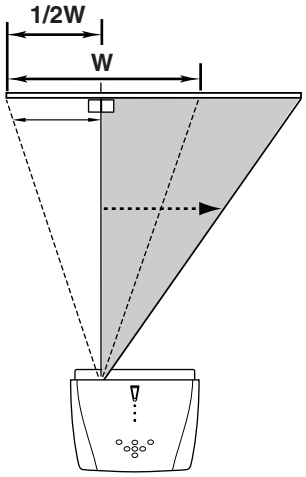

rightmost

NOTE

- *The best image is generally obtained at the center of the lens shift.*
- *When using the lens shift upward or downward to the limit, the lens does not move to the limit leftward or rightward. When using the lens shift leftward or rightward to the limit, the lens does not move to the limit upward or downward.*

Connecting to Video Equipment (Video, S-Video)

Video, S-Video

Use the supplied video cable or a s-video cable (not supplied).

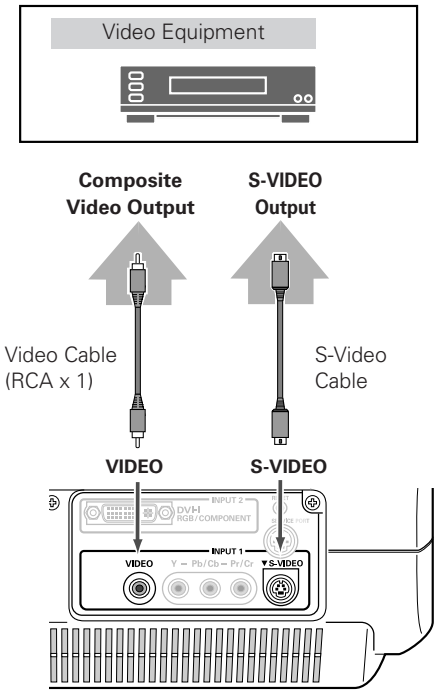

NOTE

- *The S-VIDEO jack has priority over the VIDEO jack under the condition of connecting both the S-VIDEO jack and the VIDEO jack when selecting AUTO in the Input Menu (p24).*

Connecting to Video Equipment (Component, DVI compatible with HDCP)

Component, DVI compatible with HDCP

Use a component cable (option or commercially available) and a component-DVI cable (option) for component.
Use a DVI cable (option) for DVI compatible with HDCP.

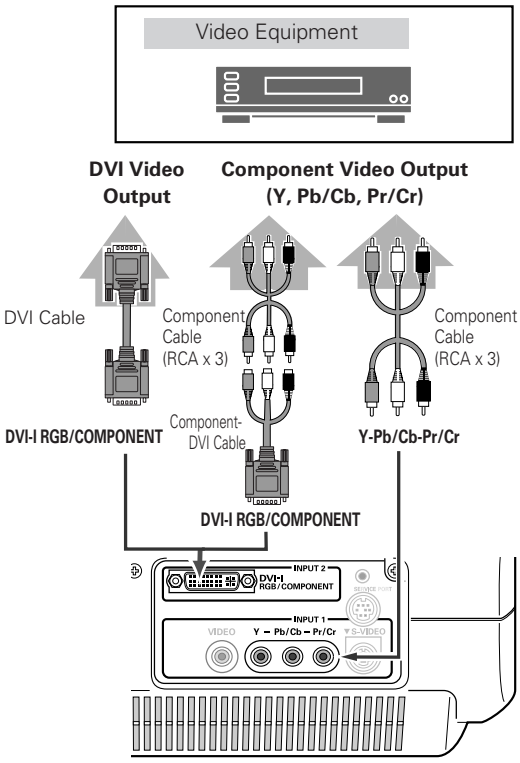

NOTE

- *See page 55 for ordering optional cables.*

NOTE
When connecting the cable, the power cords of both the projector and the external equipment should be disconnected from AC outlet.

Connecting to Video Equipment (RGB Scart)

RGB Scart

Use a Scart-DVI cable (option).

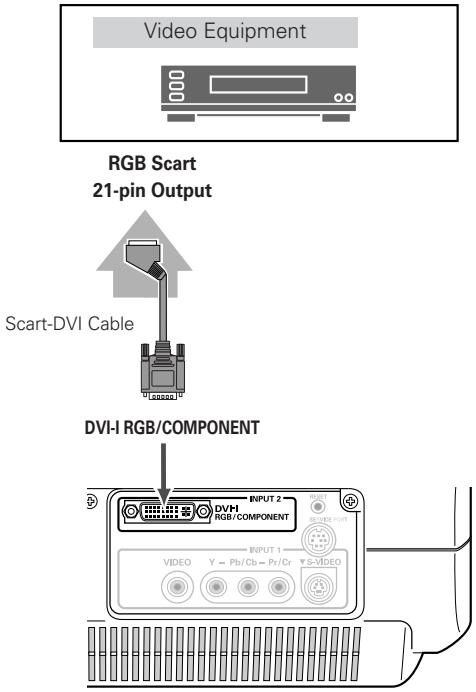

Connecting to a Computer

Computer (Digital/Analog)

Use a DVI cable (option) for digital.
Use a DVI-VGA cable (option) for analog.

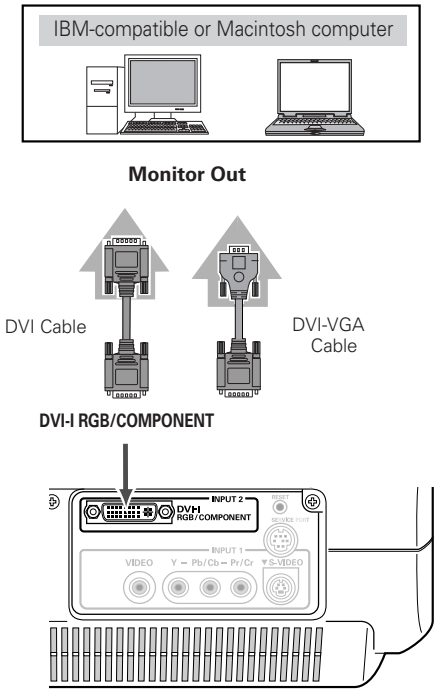

NOTE

- *See page 55 for ordering optional cables.*

NOTE
When connecting the cable, the power cords of both the projector and the external equipment should be disconnected from AC outlet.

Turning On the Projector

1 Complete peripheral connections (with a computer, VCR, etc.) before turning on the projector.

2 Connect the projector's AC power cord into an AC outlet and open the front cover. Turn the Main On/Off switch on, and the POWER indicator flashes red in a moment and turns on red. (The POWER indicator continues to flash red slowly if the front cover is being closed.)

3 Press the POWER ON-OFF button on the top control or on the remote control. The POWER indicator turns green, and the cooling fans start to operate. The preparation display appears on the screen and the count down starts. (A captured image can be used as the preparation display. See "Capture" on page 40.)

4 After the count-down, the input source that was selected last and the Lamp mode status icon appear on the screen.

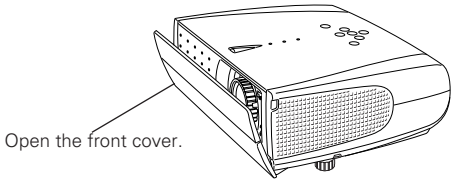

Main On/Off switch

OFF **ON**

Selected Input Source and Lamp Mode

(See page 41 for Lamp mode.)

Turning Off the Projector

1 Press the POWER ON-OFF button on the top control or on the remote control, and a message "Power off?" appears on the screen. The message is not displayed and the projector is turned off when the Power off confirmation function is off. (See the Setting Menu on page 40.)

2 Press the POWER ON-OFF button again to turn off the projector. The POWER indicator starts to flash red, and it continues while the cooling fans are operating (for about 90 seconds).

3 When the projector has cooled down enough to be turned on again, the POWER indicator lights red. Then you can turn the Main On/Off switch off and disconnect the AC power cord.

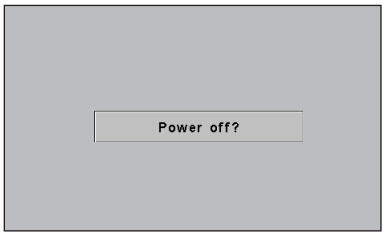

The message disappears after 4 seconds.

TO MAINTAIN THE LIFE OF LAMP, ONCE YOU TURN PROJECTOR ON, WAIT AT LEAST 5 MINUTES BEFORE TURNING IT OFF.
DO NOT DISCONNECT AC POWER CORD WHILE COOLING FANS ARE RUNNING OR BEFORE POWER INDICATOR LIGHTS RED. OTHERWISE IT WILL RESULT IN SHORTENING LAMP LIFE.

NOTE

- *When the front cover is closed during operation, the projector is automatically turned off in 5 seconds for safety. Be sure to turn off the projector by pressing the POWER ON-OFF button on the top control or on the remote control after use.*
- *The projector cannot be turned on during the cooling period with the POWER indicator flashing red. You can turn it on again after the POWER indicator lights red.*
- *Do not use the projector for more than 24 hours continuously. Turn off the projector at least once in 24 hours and give it a rest. Continuous use may result in shortening the lamp lifetime.*
- *This projector monitors internal temperature and automatically controls the running speed of the cooling fans.*
- *If the WARNING indicator flashes or lights red, see "Warning Indicator" on page 42.*

Zoom Adjustment

Move the Zoom Lever to zoom in and out.

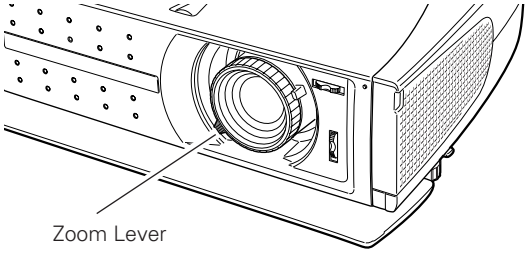

Focus Adjustment

Rotate the Focus Ring to adjust the projected picture focus.

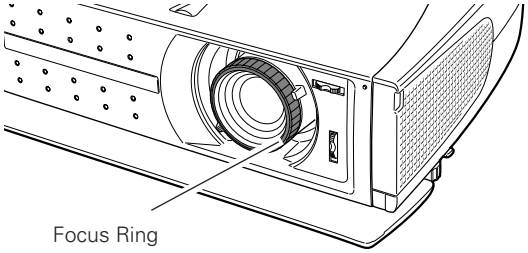

Aperture (Contrast) Adjustment

Move the Aperture Lever to adjust contrast.

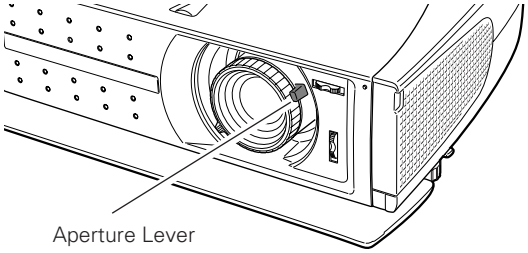

Keystone Adjustment

If a projected picture has keystone distortion, correct the image with KEYSTONE adjustment.

1 Press the KEYSTONE ▲/▼ button on the remote control or select the Keystone in the Setting Menu (p39). The Keystone dialog box appears.

2 Correct keystone distortion by pressing the KEYSTONE ▲/▼ button or the Point Up/Down button. Press the KEYSTONE ▲ button or the Point Up button to reduce the upper part of image, and press the KEYSTONE ▼ button or the Point Down button to reduce the lower part.

- The arrows are white when there is no correction.
- The arrow disappears at the maximum correction.
- The direction of the arrow being corrected turns purple.

Reduce the upper width with the KEYSTONE ▲ button or the Point Up button.

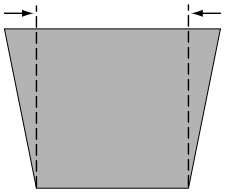

Reduce the lower width with the KEYSTONE ▼ button or the Point Down button.

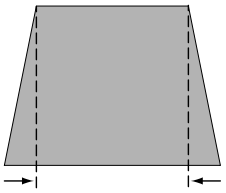

My Picture Function

Press the MY PICTURE (MY-P) button on the remote control to display a captured image. To restore to normal, press the MY PICTURE (MY-P) button again or press any other button.

No Show Function

Press the NO SHOW button on the remote control to black out the image. To restore to normal, press the NO SHOW button again or press any other button.

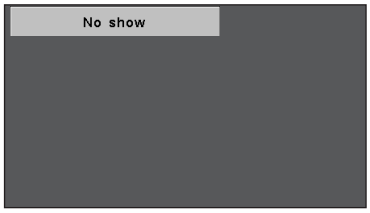

The message disappears after 4 seconds.

On-Screen Menu

You can control and adjust this projector through the On-Screen Menu. Refer to the following pages to operate each adjustment on the On-Screen Menu.

Remote Control

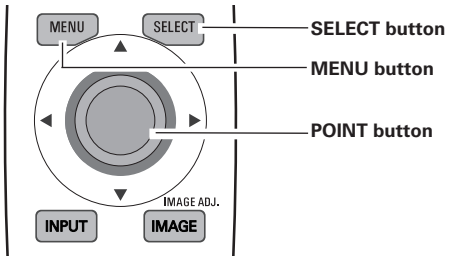

Top Control

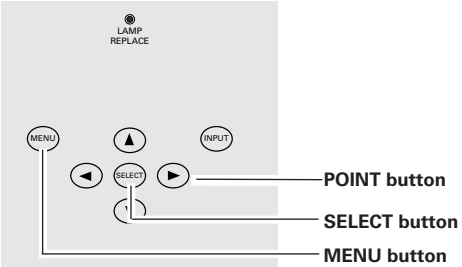

1 Press the MENU button to display the On-Screen Menu (Main Menu).

2 Select a menu from the main menu by pressing the Point Up/Down button, and press the Point Right button to enter the sub-menu. (The selected icon turns yellow.)

3 Select an item by pressing the Point Up/Down button, and activate the item that you have selected with the ↵ (SELECT), ◀ (Point Left), or ▶ (Point Right) button.

4 Press the MENU button to close the On-Screen Menu when you are selecting a main menu. When you are selecting a sub-menu, press the MENU button twice.

On-Screen Menu (Main Menu)

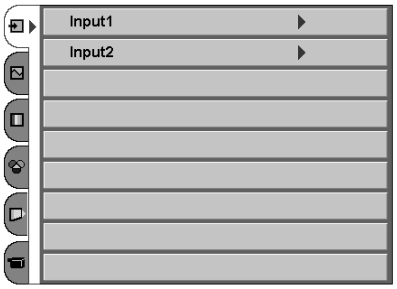

Point Right button

On-Screen Menu (Sub-Menu)

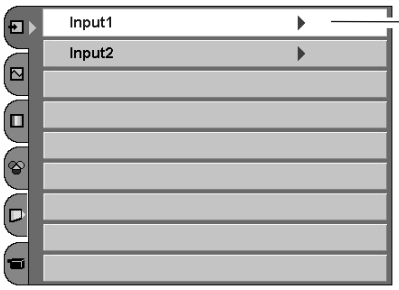

NOTE

- *If you are selecting a sub-menu or an item displayed in a line, pressing the MENU button takes you back to the previous On-Screen Menu.*
- *The On-Screen Menu disappears by holding down the MENU button longer whatever you are selecting.*

Menus

VIDEO MENUS

	Input Menu: selects video input source. (p23-25)
	AV System Menu: selects video system from AUTO, PAL, SECAM, NTSC, NTSC4.43, PAL-M, PAL-N, 1080i, 1035i, 720p, 575p, 480p, 575i, 480i. (p26)
	Image Select Menu: selects image level from Standard, Cinema, Game, and Image 1 ~ 4. (p27)
	Image Adjust Menu: adjusts Contrast, Brightness, Color, Tint, Color temp., White balance (R/G/B), Sharpness, Gamma, Auto grayscale, Progressive, Film, Reset, Store. (p28, 29)
	Screen Menu: sets the screen size from Full, Full through, Zoom, Caption IN, Normal, Normal through, or Natural wide. (p30)
	Setting Menu: changes various settings; Language, Keystone, Blue back, Display, Background color, Menu position, Logo, Capture, Ceiling, Rear, Power management, Power off confirmation, Lamp mode, Remote control, Lamp counter reset, and Factory default. (p39-41)

COMPUTER MENUS

	Input Menu: selects computer input source. (p31)
	PC System Menu: selects computer system. (p32)
	PC Adjust Menu: selects Auto PC Adj., Fine sync, Total dots, Horizontal, Vertical, Current mode, Clamp, Display area, Display area H, Display area V, Full screen, and use Reset, Mode free, and Store. (p33-35)
	Image Select Menu: selects image level from Standard, Real, and Image 1 ~ 4. (p36)
	Image Adjust Menu: adjusts Contrast, Brightness, Color temp., White balance (R/G/B), Sharpness, Gamma, Auto grayscale, Reset, Store. (p37)
	Screen Menu: sets the size from Normal, Full, True, and Digital zoom. (p38)
	Setting Menu: changes various settings; Language, Keystone, Blue back, Display, Background color, Menu position, Logo, Capture, Ceiling, Rear, Power management, Power off confirmation, Lamp mode, Remote control, Lamp counter reset, and Factory default. (p39-41)

Input Source Selection (INPUT 1 Terminal/Video, S-Video, Component)

Direct Operation

INPUT button

Choose Input 1 by pressing the INPUT button on the top control or on the remote control. Before using these buttons, correct input source should be selected through the INPUT 1 buttons on the remote control or through menu operation as described on the next page.

INPUT button

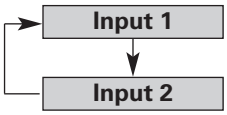

Top Control **Remote Control**

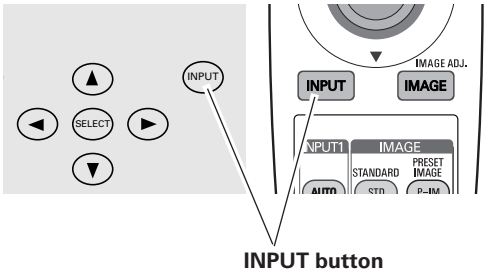

INPUT 1 buttons

Press the AUTO, VIDEO, S-VIDEO, or COMPO button on the remote control according to video input.
It is convenient for you to select the AUTO as the projector automatically detects incoming video signal, and adjust itself to optimize its performance.

Remote Control

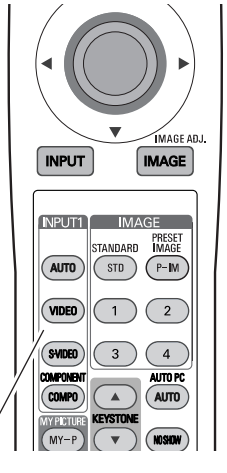

INPUT 1 buttons: AUTO / VIDEO / S-VIDEO / COMPO

AUTO When selecting the AUTO button, the projector automatically detects incoming video signal, and adjusts itself to optimize its performance. However, the projector selects connection in the following order under the condition of connecting more than one input source:

1st Y-Pb/Cb-Pr/Cr
2nd S-VIDEO
3rd VIDEO

Y-Pb/Cb-Pr/Cr has priority over S-VIDEO. S-VIDEO has priority over VIDEO.

VIDEO When video input signal is connected to the VIDEO jack, select Video.

S-VIDEO When video input signal is connected to the S-VIDEO jack, select S-Video.

COMPO When video input signal is connected to the Y-Pb/Cb-Pr/Cr jacks, select COMPO.

Menu Operation

1 Select the Input Menu with the Point Up/Down button, and then press the Point Right button to enter the sub-menu.

2 Select Input 1 with the Point Up/Down button and then press the Point Right button. The Source Select Menu will appear.

3 Move the pointer to the source that you want to select and then press the SELECT button.

Input Menu

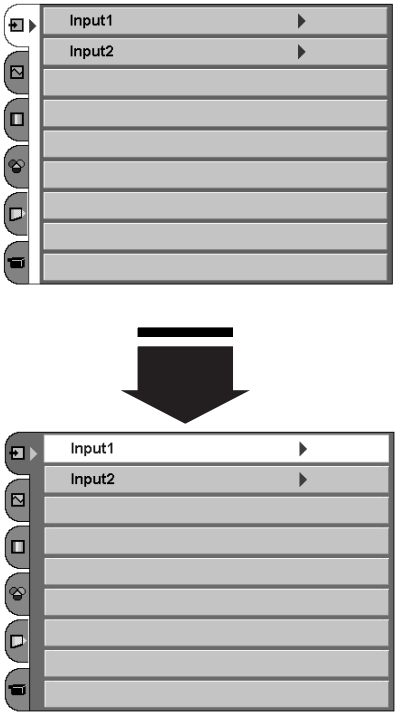

Auto When selecting the AUTO button, the projector automatically detects incoming video signal, and adjusts itself to optimize its performance. However, the projector selects connection in the following order under the condition of connecting more than one input source:

1st Y-Pb/Cb-Pr/Cr
2nd S-VIDEO
3rd VIDEO

Y-Pb/Cb-Pr/Cr has priority over S-VIDEO. S-VIDEO has priority over VIDEO.

Video When video input signal is connected to the VIDEO jack, select Video.

S-Video When video input signal is connected to the S-VIDEO jack, select S-Video.

Y,Pb/Cb,Pr/Cr (component) When video input signal is connected to the Y-Pb/Cb-Pr/Cr jacks, select Y,Pb/Cb,Pr/Cr.

Source Selection Menu

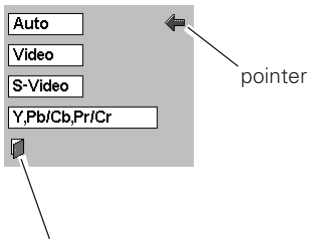

Input Source Selection (INPUT 2 Terminal/HDCP, Component, Scart)

Direct Operation

INPUT button

Choose Input 2 by pressing the INPUT button on the top control or on the remote control. Before using these buttons, correct input source should be selected through menu operation as described below.

INPUT button

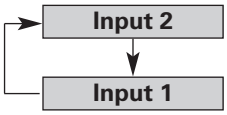

Top Control **Remote Control**

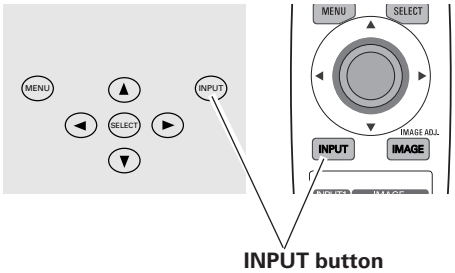

Menu Operation

1 Select the Input Menu with the Point Up/Down button, and then press the Point Right button to enter the sub-menu.

2 Select Input 2 with the Point Up/Down button and then press the Point Right button. The Source Select Menu will appear.

3 Move the pointer to the source that you want to select and then press the SELECT button.

Input Menu

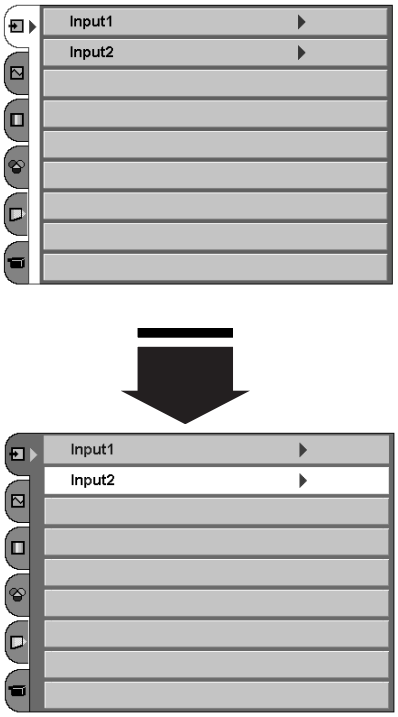

RGB (AV HDCP) When the input source compatible with HDCP is coming from video equipment through the DVI terminal, select RGB (AV HDCP).

Component When the input source is coming from video equipment connected to the DVI terminal with a Component-DVI Cable, select Component.

RGB (Scart) When the input source is coming from video equipment connected to the DVI terminal with a Scart-DVI Cable, select RGB (Scart).

Source Selection Menu

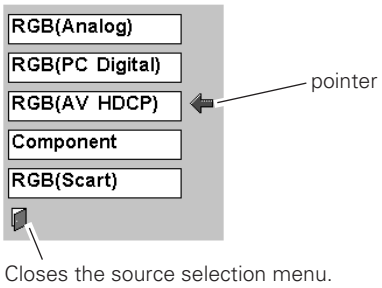

NOTE

- *HDCP (High-bandwidth Digital Content Protection) is a system for protecting digital entertainment content delivered by DVI (Digital Visual Interface) from being copied.*
  The specification of HDCP is decided and controlled by Digital Content Protection, LLC. Should the specification be changed, this projector may not display the digital content protected by HDCP.
- *Component-DVI Cable and Scart-DVI Cable are options. See page 55 for order.*

Video System Selection

1 Select the AV System Menu with the Point Up/Down button, and then press the Point Right button to enter the sub-menu.

2 Choose the system that you want to select with the Point Up/Down button and then press the SELECT button.

AV System Menu (Video or S-Video)

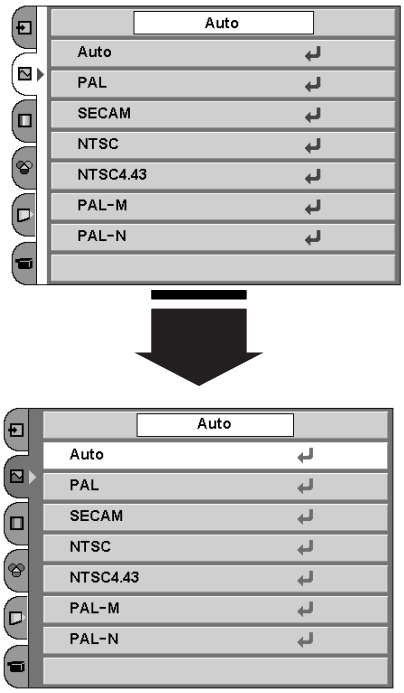

Video or S-Video

Auto

The projector automatically detects incoming video system, and adjusts itself to optimize its performance.
When Video System is PAL-M or PAL-N, select system manually.

PAL / SECAM / NTSC / NTSC4.43 / PAL-M / PAL-N

If the projector cannot reproduce proper video image, it is necessary to select a specific broadcast signal format among PAL, SECAM, NTSC, NTSC 4.43, PAL-M, and PAL-N.

Component

AV System Menu (Component)

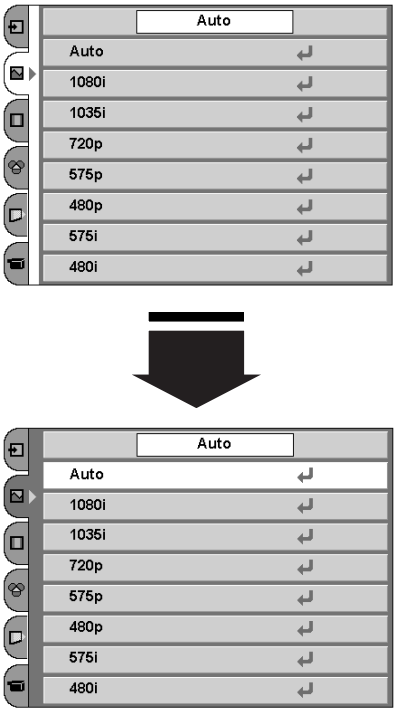

Auto

The projector automatically detects incoming video signal, and adjusts itself to optimize its performance.

Component Video Signal Format

If the projector cannot reproduce proper video image, it is necessary to select a specific component video signal format among 480i, 575i, 480p, 575p, 720p, 1035i, and 1080i.

NOTE

- *The AV System Menu cannot be selected when selecting RGB(Scart).*

Image Level Selection

Direct Operation

Select an image level among Standard, Cinema, Game, Image 1, Image 2, Image 3, and Image 4 by pressing the IMAGE buttons (STANDARD (STD), PRESET IMAGE (P-IM), and 1-4 buttons) on the remote control. (Each time you press the PRESET IMAGE (P-IM) button, either Cinema or Game is selected.)

Standard (STD)
Normal picture level preset on this projector.

Cinema [PRESET IMAGE (P-IM)]
Picture level adjusted for the picture with fine tone.

Game [PRESET IMAGE (P-IM)]
Picture level suitable for playing a game.

IMAGE 1~4
User preset image in the Image Adjust Menu (p28, 29).

Remote Control

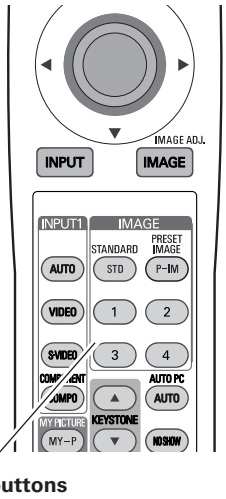

Menu Operation

1 Select the Image Select Menu with the Point Up/Down button, and then press the Point Right button to enter the sub-menu.

2 Choose the level that you want to select with the Point Up/Down button and then press the SELECT button.

Image Select Menu

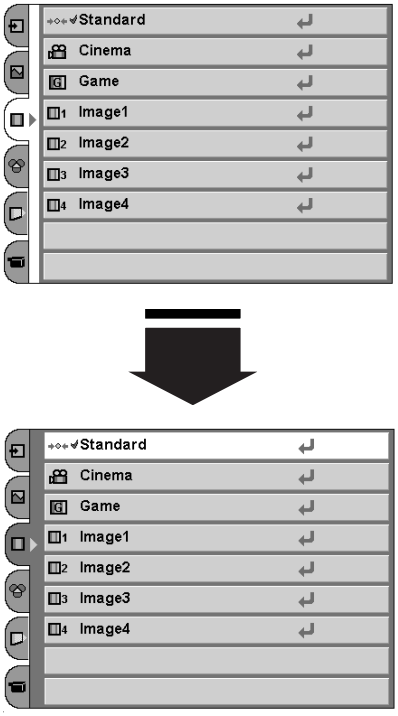

Standard
Normal picture level preset on this projector.

Cinema
Picture level adjusted for the picture with fine tone.

Game
Picture level suitable for playing a game.

IMAGE 1~4
User preset image in the Image Adjust Menu (p28, 29).

Image Level Adjustment

1 Select the Image Adjust Menu with the Point Up/Down button, and then press the Point Right button to enter the sub-menu.

2 Select an item with the Point Up/Down button and press the Point Left/Right button to adjust the item.

Image Adjust Menu

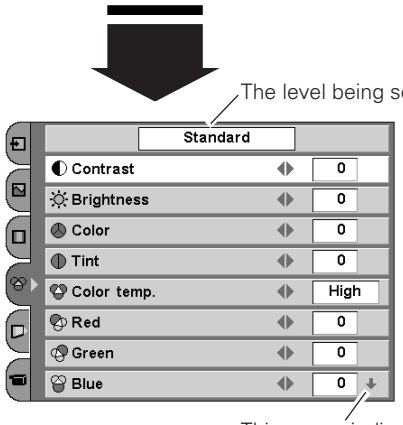

The level being selected

This arrow indicates that there are other items. Select this item and press the Point Down button to go to the next item.

Press the SELECT button to adjust the next item.
Press the MENU button to return to the previous On-Screen Menu and store the adjusted value.

Go on to the next page...

Contrast

Press the Point Left button to decrease contrast and the Point Right button to increase contrast. (From -31 to +31)

Brightness

Press the Point Left button to adjust image darker and the Point Right button to adjust image brighter. (From -31 to +31)

Color

Press the Point Left button to lighten color and the Point Right button to deepen color. (From -31 to +31)

Tint

Press the Point Left/Right button to obtain proper color. (From -31 to +31)

Color temp.

Press the Point Left/Right button for Color temperature level that you want to select. (High, Mid, Low1, Low2, Low3)

White balance (Red)

Press the Point Left button to lighten red tone and the Point Right button to deepen red tone. (From -31 to +31)

White balance (Green)

Press the Point Left button to lighten green tone and the Point Right button to deepen green tone. (From -31 to +31)

White balance (Blue)

Press the Point Left button to lighten blue tone and the Point Right button to deepen blue tone. (From -31 to +31)

NOTE

- *You can also adjust items with the IMAGE ADJ. (IMAGE) button on the remote control. (p12)*
- *Tint cannot be selected when the video system is PAL, SECAM, PAL-M, or PAL-N except for 575i.*

Sharpness

Press the Point Left button to soften the image and the Point Right button to sharpen the image. (From -7 to +7)

Gamma

Press the Point Left/Right button to obtain better balance of contrast. (From -7 to +7)

Auto grayscale

When this function is "ON", it automatically enhances contrast of bright and dark part of image.

Progressive

Interlace video signal can be converted to a progressive signal.

Off ···· Not activated.
L1 ···· Select "L1" for an active picture.
L2 ···· Select "L2" for a still picture.

Film

When this function is on, it detects proper interleaving of 3-2 pull down for film-base sources and produces a suitable image for the input source. (This function is available only when selecting L1 or L2 on Progressive for NTSC.)

Reset

Resets all adjustment to their previous figure.

Store

To store the adjustment data, select Store and press the Point Right button. The Image Level Menu will appear. Choose one of 4 image levels with the Point Up/Down button and press the SELECT button. A confirmation box will appear and select [Yes].

This arrow indicates that there are previous items. Select this item and press the Point Up button to go to the previous item.

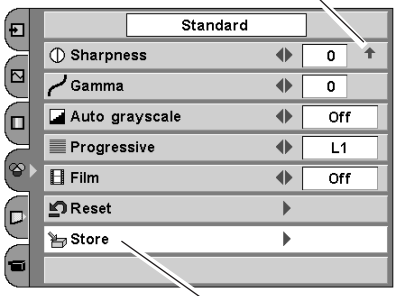

Press the Point Right button at this icon to store the value.

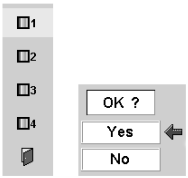

The Image Level Menu will appear. Choose one of 4 image levels with the Point Up/Down button and press the SELECT button. A confirmation box will appear and select [Yes].

NOTE

- *You can also adjust items with the IMAGE ADJ. (IMAGE) button on the remote control. (p12)*
- *Progressive cannot be selected when 480p, 575p, 720p, 1035i, or 1080i is selected.*

Screen Size Adjustment

This projector has a useful function to resize a projected screen.

1 Select the Screen Menu with the Point Up/Down button, and then press the Point Right button to enter the sub-menu.

2 Select an item with the Point Up/Down button and press the Point Left/Right button to set the screen size.

Screen Menu

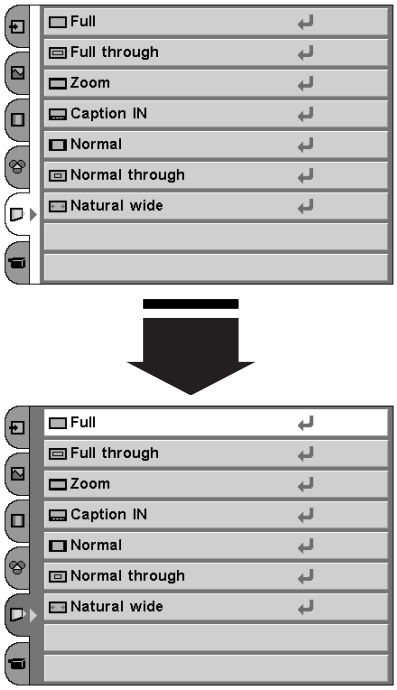

Full

Provides an image to fit the width of the screen by expanding the width of the image uniformly. This function can be used to project a squeezed video signal at a wide video aspect ratio of 16 : 9.
When your video equipment (such as DVD) has 16 : 9 output mode, select 16 : 9 and select Full in this Screen Menu to provide better quality.

Full through

Expands the width of an image and projects it in the center at a wide screen ratio of 16 : 9. (You can enjoy a high-quality image though the projected image is small.)

Zoom

Provides an image to fit the screen size (16 : 9 aspect ratio) by expanding the width and height of the image uniformly. This function can be used to project a letter box mode picture (4 : 3 aspect picture with black bar on the top and bottom edges) at a wide video aspect ratio of 16 : 9.

Caption IN

Provides an image including a caption to fit the screen size (16 : 9 aspect ratio) by expanding the width and height of the image uniformly.

Normal

Provides an image at a normal video aspect ratio of 4 : 3.

Normal through

Provides an image with no modification. (You can enjoy a high-quality image though the projected image is small.)

Natural wide

Modifies an image of 4 : 3 aspect ratio to fit the screen size (16 : 9 aspect ratio). It expands the width and height of the image and makes it look natural.

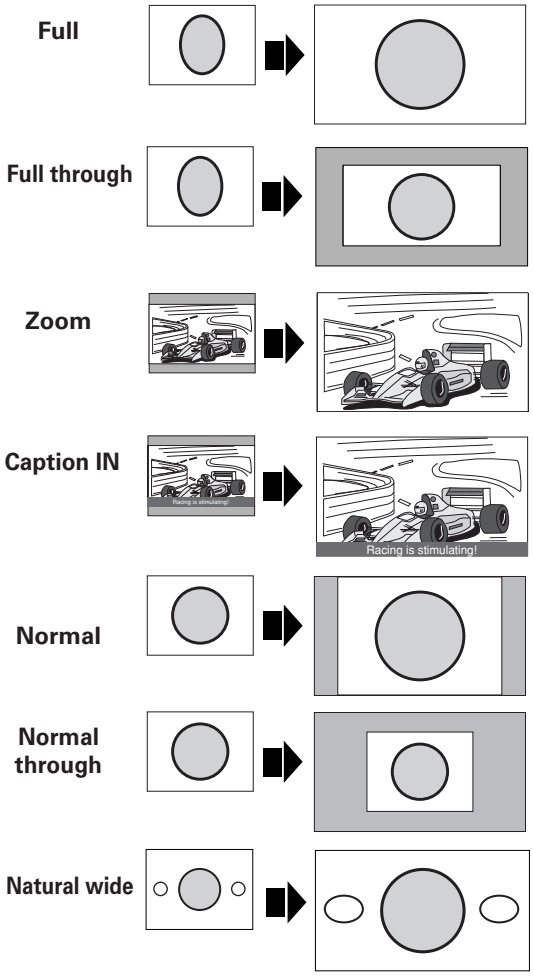

NOTE

- *You can also resize a projected screen with the SCREEN (SCR) button on the remote control. (p12)*
- *Screen Menu cannot be selected when "720p", "1035i", or "1080i" is selected in the AV System Menu (p26).*

Input Source Selection

Direct Operation

Choose INPUT 2 by pressing the INPUT button on the top control or on the remote control.
Before using these buttons, correct input source should be selected through menu operation as described below.

INPUT button

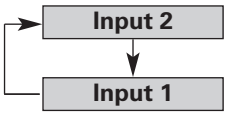

Top Control **Remote Control**

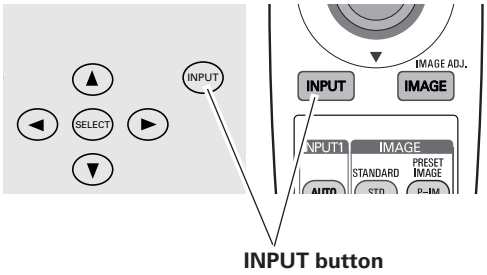

Menu Operation

1 Select the Input Source Selection Menu with the Point Up/Down button, and then press the Point Right button to enter the sub-menu.

2 Select Input 2 with the Point Up/Down button and then press the Point Right button. The Source Select Menu will appear.

3 Move the pointer to the source that you want to select and then press the SELECT button.

Input Menu

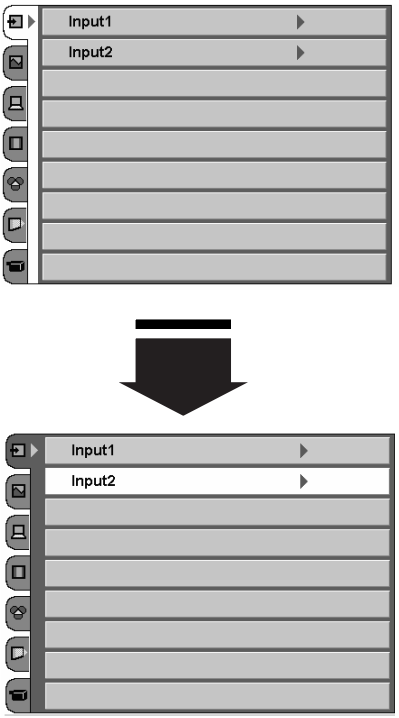

RGB (Analog) When the input source is analog coming from a computer through the DVI terminal, select RGB (Analog).

RGB (PC Digital) When the input source is digital coming from a computer through the DVI terminal, select RGB (PC Digital)

Source Selection Menu

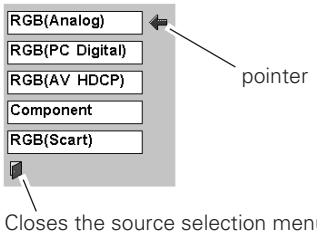

Computer System Selection

This projector can detect most of the current computer systems with the Multi-scan system and the Auto PC adjustment function provided in the projector. When selecting computer input, the projector automatically displays the most proper image for the input signal. One of the following four displays appears on the system menu icon. If the projector does not tune the input signal and the projected image is not displayed properly, or when you wish to adjust it manually, perform manual adjustment as described on page 34 and 35.

Auto When the projector cannot recognize the connected signal as PC system provided in this projector, the Auto PC Adjustment function operates to adjust the projector and the message "Auto" is displayed in the PC System Menu icon. When the image is not provided properly, manual adjustment is required. (p34, 35)

– – – – There is no signal input from the connected computer. Check the connection of the computer and see if the projector is set correctly.
(See "Troubleshooting" on page 47.)

Mode 1 User preset adjustment in Computer Adjustment. Adjustment data can be stored in Mode 1 - 5. (p34, 35)

SVGA 1 Computer systems provided in the projector. The projector chooses a proper system and displays it.

*Mode 1 and SVGA 1 are examples.

PC System Menu

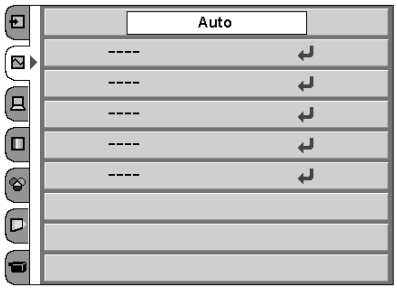

Menu Operation

PC system can also be selected manually if some PC systems appear on the On-Screen Menu.

1 Select the PC System Menu with the Point Up/Down button, and then press the Point Right button to enter the sub-menu.

2 Choose the system that you want to select with the Point Up/Down button and then press the SELECT button.

PC System Menu

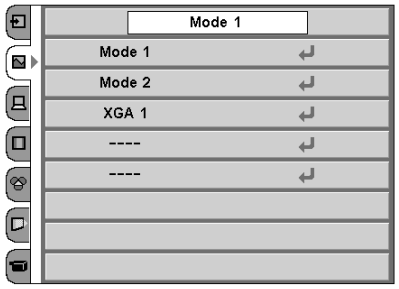

Computer Adjustment (Auto)

The Auto PC Adjustment function is provided to automatically adjust Fine sync, Total dots, Horizontal, and Vertical to conform to your computer. This function can be operated as follows.

1 Select the PC Adjust Menu with the Point Up/Down button, and then press the Point Right button to enter the sub-menu.

2 Choose the AUTO PC Adj. item and then press the SELECT button.

PC Adjust Menu

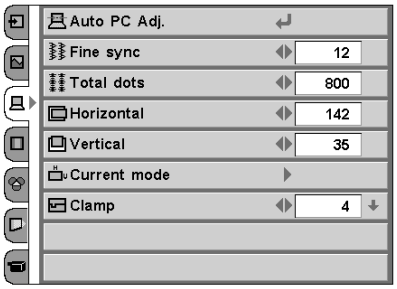

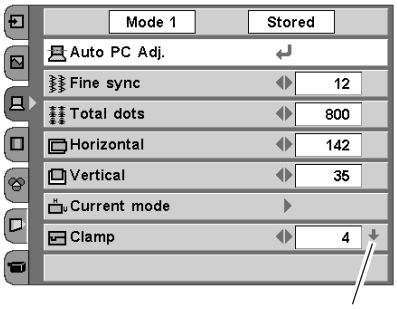

This arrow indicates that there are other items. Select this item and press the Point Down button to go to the next item.

Auto PC Adj.

Automatically adjusts Fine sync, Total dots, Horizontal, and Vertical for the input signal from your computer.

To store adjustment data

Adjustment parameters from Auto PC Adjustment can be memorized in this projector. Once parameters are memorized, the setting can be done just by selecting Mode in the PC System Menu (p32). See "Store" on page 35.

NOTE

- *The PC Adjust Menu cannot be operated when the input signal is digital or a signal compatible with HDCP.*
- *The Auto PC Adjust cannot be operated when 480i, 575i, 480p, 575p, 720p, 1035i, or 1080i is selected in the PC System Menu.*

Computer Adjustment (Manual)

Some computers employ special signal formats which may not be tuned by Multi-scan system of this projector. This projector has Manual PC Adjustment to enable you to precisely adjust several parameters to match those signal formats. The projector has 5 independent memory areas to memorize those parameters manually adjusted. This enables you to recall the setting for a specific computer whenever you use it.

1 Select the PC Adjust Menu with the Point Up/Down button, and then press the Point Right button to enter the sub-menu.

2 Select an item with the Point Up/Down button and press the Point Left/Right button to adjust each item.

PC Adjust Menu

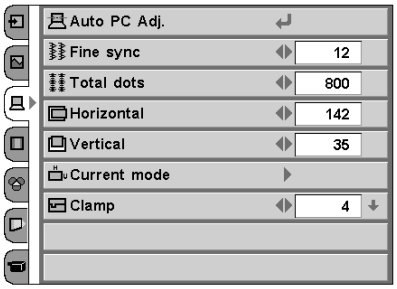

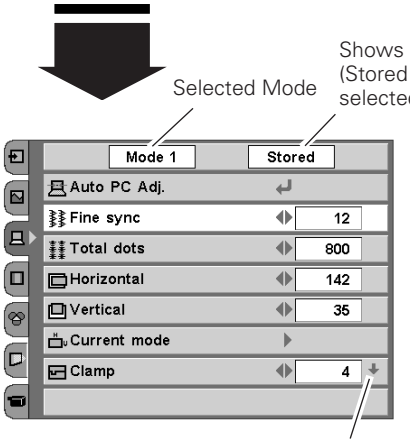

This arrow indicates that there are other items. Select this item and press the Point Down button to go to the next item.

Press the SELECT button to adjust the next item.
Press the MENU button to return to the previous On-Screen Menu and store the adjusted value.

Go on to the next page...

Fine sync

Adjusts an image as necessary to eliminate flicker from the display. Press the Point Left/Right button to adjust value. (From 0 to 31)

Total dots

Adjusts the number of total dots in one horizontal period. Press the Point Left/Right button and adjust number to match your PC image.

Horizontal

Adjusts horizontal picture position. Press the Point Left/Right button to adjust the position.

Vertical

Adjusts vertical picture position. Press the Point Left/Right button to adjust the position.

Current mode

Press the Point Right button to show the information of the connected computer.

Clamp

Adjusts clamp level. When the image has dark bars, try this adjustment.

Display area

Select the resolution at the Display area dialog box.

Display area H

Adjusts the horizontal area displayed by this projector. Press the Point Left/Right button to decrease/increase value and then press the SELECT button.

Display area V

Adjusts the vertical area displayed by this projector. Press the Point Left/Right button to decrease/increase value and then press the SELECT button.

Full screen

When this function is on, SXGA image is fully displayed at 4 : 3 aspect ratio. It is displayed at 5 : 4 aspect ratio with this function off.

Reset

Resets all adjustment to their previous levels.

Mode free

To clear adjustment data previously set, select Mode free and press the Point Right button. A dialog box will appear and choose one of 5 modes and then press the SELECT button.

Store

To store adjustment data, select Store and press the Point Right button. A dialog box will appear and choose one of 5 modes and then press the SELECT button.

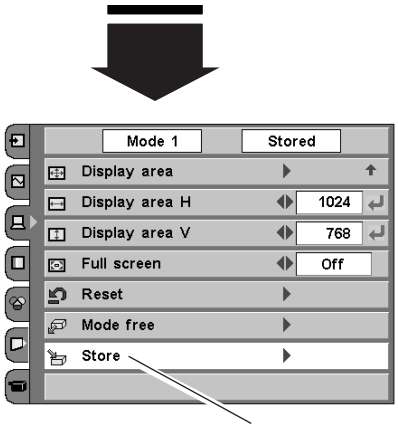

Select Store to store adjustment data.

To clear adjustment data

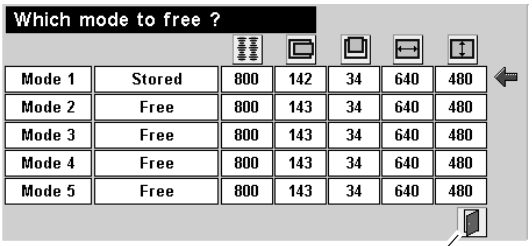

closes this dialog box.

To store adjustment data

This Mode has parameters being stored.

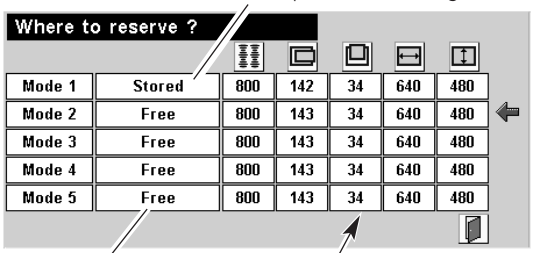

Vacant Mode

shows values of "Total dots," "Horizontal," "Vertical," "Display area H," and "Display area V."

NOTE

- *Auto PC Adjust, Display area, Display area (H/V), and Full screen cannot be selected when "480i", "575i", "480p", "575p", "720p", "1035i", or "1080i" is selected in the PC System Menu (p32).*

Image Level Selection

Direct Operation

Select an image level among Standard, Real (P-IM), Image 1, Image 2, Image 3, and Image 4 by pressing the IMAGE buttons (STANDARD (STD), PRESET IMAGE (P-IM), and 1-4 buttons) on the remote control.

Standard (STD)
Normal picture level preset on this projector.

Real [PRESET IMAGE (P-IM)]
Picture level with improved halftone for graphics.

IMAGE 1~4
User preset image in the Image Adjust Menu (p37).

Remote Control

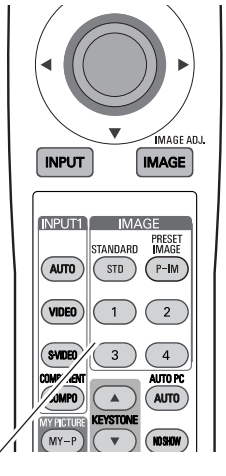

IMAGE buttons

Menu Operation

1 Select the Image Select Menu with the Point Up/Down button, and then press the Point Right button to enter the sub-menu.

2 Choose the level that you want to select with the Point Up/Down button and then press the SELECT button.

Standard
Normal picture level preset on this projector.

Real
Picture level with improved halftone for graphics.

IMAGE 1~4
User preset image in the Image Adjust Menu (p37).

Image Select Menu

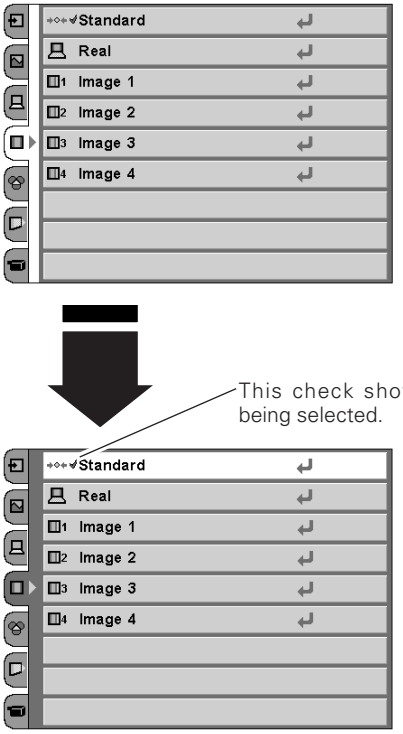

Image Level Adjustment

1 Select the Image Adjust Menu with the Point Up/Down button, and then press the Point Right button to enter the sub-menu.

2 Select an item with the Point Up/Down button and press the Point Left/Right button to adjust the item.

Image Adjust Menu

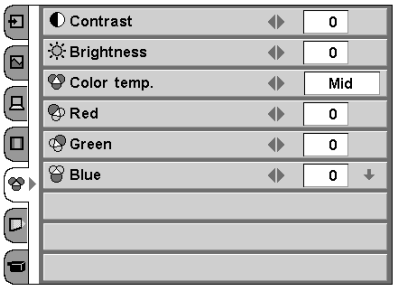

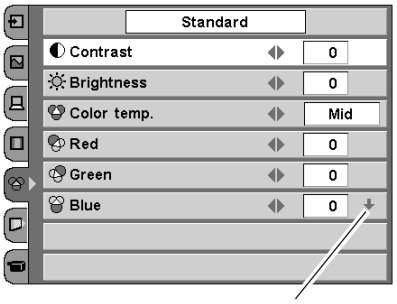

This arrow indicates that there are other item menus.

Press the SELECT button to adjust the next item.
Press the MENU button to return to the previous On-Screen Menu and store the adjusted value.

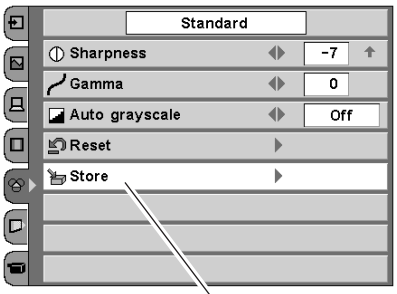

Press the Point Right button at this icon to store the value.

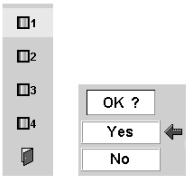

The Image Level Menu will appear. Choose one of 4 image levels with the Point Up/Down button and press the SELECT button. A confirmation box will appear and select [Yes].

Contrast

Press the Point Left button to decrease contrast and the Point Right button to increase contrast. (From -31 to +31)

Brightness

Press the Point Left button to adjust image darker and the Point Right button to adjust image brighter. (From -31 to +31)

Color temp.

Press the Point Left/Right button for Color temperature level that you want to select. (High, Mid, Low1, Low2, Low3)

White balance (Red)

Press the Point Left button to lighten red tone and the Point Right button to deepen red tone. (From -31 to +31)

White balance (Green)

Press the Point Left button to lighten green tone and the Point Right button to deepen green tone. (From -31 to +31)

White balance (Blue)

Press the Point Left button to lighten blue tone and the Point Right button to deepen blue tone. (From -31 to +31)

Sharpness

Press the Point Left button to soften the image and the Point Right button to sharpen the image. (From -7 to +7)

Gamma

Press the Point Left/Right button to obtain better balance of contrast. (From -7 to +7)

Auto grayscale

When this function is "ON", it automatically enhances contrast of bright and dark part of image.

Reset

Resets all adjustment to their previous figure.

Store

To store the adjustment data, select Store and press the Point Right button. The Image Level Menu will appear. Choose one of 4 image levels with the Point Up/Down button and press the SELECT button. A confirmation box will appear and select [Yes].

NOTE

- *You can also adjust items with the IMAGE ADJ. (IMAGE) button on the remote control. (p12)*

Screen Size Adjustment

This projector has a useful function to resize a projected screen.

1 Select the Screen Menu with the Point Up/Down button, and then press the Point Right button to enter the sub-menu.

2 Select an item with the Point Up/Down button and press the Point Left/Right button to set the screen size.

Screen Menu

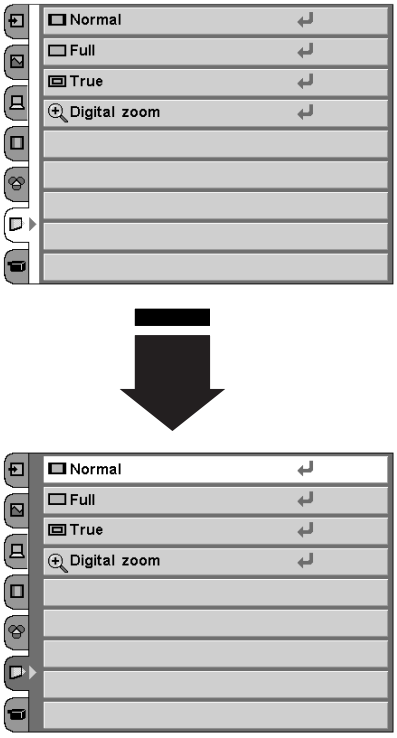

Normal

Provides image to fit screen size.

Full

Provides an image to fit the horizontal size of the screen.

True

Provides image in its original size. When the original image size is larger than the screen size (1280 x 720), this projector enters "Digital zoom" mode automatically.

Digital zoom

When Digital zoom is selected, the On-Screen Menu disappears and the message "D.Zoom" is displayed. Press the SELECT button to expand the image. And press the POINT UP/DOWN/LEFT/RIGHT button(s) to pan the image. The panning function can work only when the original image is larger than screen size (1280 x 720).

NOTE

- *You can also resize a projected screen with the SCREEN (SCR) button on the remote control. (p12)*
- *This Screen Menu cannot be operated when "720p (HDTV)", "1035i (HDTV)", or "1080i (HDTV)" is selected in the PC System Menu (p32).*
- *The True and Digital zoom cannot be selected when "480i", "575i", "480p", or "575p" is selected in the PC System Menu (p32).*
- *This projector cannot display any resolution higher than 1280 X 720. If your computer's screen resolution is higher than 1280 X 720, reset the resolution to the lower before connecting to the projector.*
- *The image data in other than the resolution (1280 x 720) is modified to fit the screen size in initial mode.*
- *The panning function may not operate properly if the computer system prepared in the PC Adjust Menu is used.*

Setting

1 Select the Setting Menu with the Point Up/Down button, and then press the Point Right button to enter the sub-menu.

2 Select an item with the Point Up/Down button to set various settings.

Language

The language used in the On-Screen Menu is available in English, German, French, Italian, Spanish, Portuguese, Dutch, Swedish, Russian, Chinese, Korean, or Japanese.

Keystone

When the image is distorted vertically, select the Keystone. The On-Screen Menu disappears and the Keystone dialog box is displayed. Correct keystone distortion by pressing the Point Up/Down button. Refer to Keystone Adjustment on page 20.

Blue back

When this function is "On," the projector produces a blue image while input signal is not detected.

Display

This function decides whether to display On-Screen Displays.

On .... shows all the On-Screen Displays.

Off .... does not show On-Screen Displays except;

- On-Screen Menu
- "Power off?" message
- "No signal" message
- "Wait a moment!" message

Background color

This function is used to change the color of background in the On-Screen Menu.

Menu position

This function is used to change the position of the On-Screen Menu. Move it with the Point Up/Down/Left/Right button and press the SELECT button to set it.

Logo

This function decides what to be displayed when starting up.

Off .... count-down only

Default .... the factory-set logo

User .... the image you captured

Setting Menu (Language)

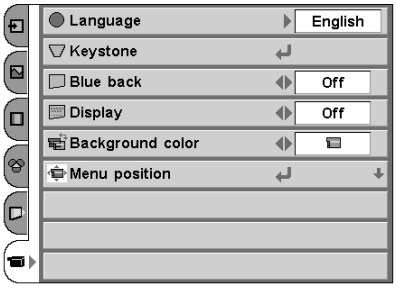

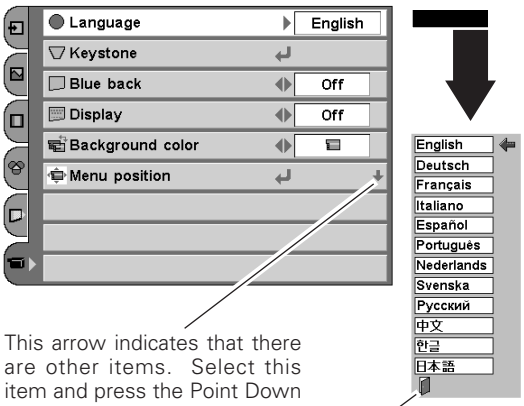

This arrow indicates that there are other items. Select this item and press the Point Down button to go to the next item.

After selecting a language, move the pointer to this icon, and press the SELECT button to activate it.

Menu position

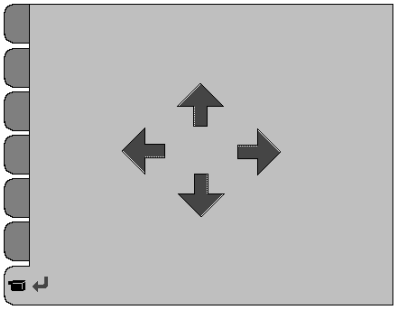

Capture

This function is used to capture the image being projected and use it for a starting-up display or interval of presentations. After capturing the projected image, go to the Logo function and set it as "User". Then the captured image will be displayed when turning on the projector next time or pressing the MY PICTURE (MY-P) button on the remote control. (p12)
To capture the image, select [Yes]. To cancel the Capture function, select [No].

Ceiling

When this function is "On," the picture is top/bottom and left/right reversed. This function is used to project the image from a ceiling mounting the projector.

Rear

When this function is "On," the picture is left/right reversed. This function is used to project the image to a rear projection screen.

Power management

For reducing power consumption as well as maintaining the lamp life, the Power management function turns off the projection lamp when the input signal is interrupted and no button is pressed for 30 seconds or more.

When the input signal is interrupted and no button is pressed for 30 seconds or more, the timer display with the message "No signal" appears on the screen. The count-down starts for 5 minutes.

When the count-down time has elapsed, the lamp will be turned off to cool itself down. The POWER indicator is flashing red during this cooling-off period. The next performance depends on setting as follows.

On ··· When the lamp has been fully cooled down, the POWER indicator changes to green flashing. In this condition, the projection lamp will be turned on if the input signal is reconnected or any button on the top control or remote control is pressed.
Off ··· The Power management function is canceled.

Power off confirmation

The confirmation dialog box to turn off the projector is displayed with this function ON.

NOTE

- *Before capturing an image, select Standard in the Image Select Menu to capture a proper image. (p27, 36)*
- *A signal from a computer can be captured up to XGA(1024 x 768). If selecting 1280 x 1024 at Display area in the PC Adjust Menu (p35), then the image cannot be captured.*
- *A signal from video equipment can be captured except for 720p, 1035i, 1080i, and a signal compatible with HDCP.*
- *When capturing the image that has been adjusted by the Keystone function, the adjustment data is automatically reset and the projector captures an image without keystone adjustment.*
- *If the Capture function fails to capture an image, the On-Screen Menu returns to the Capture item.*
- *If capturing a signal which is not able to be captured, an exclamation mark appears and the function will not be available.*
- *If cancelling the Capture function in the middle of operation, the last captured image will be deleted.*

Capture

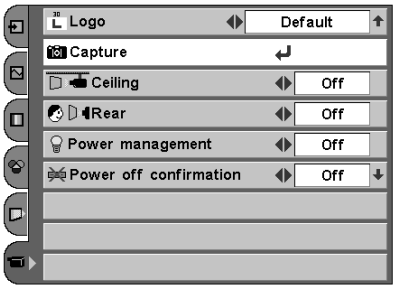

Ceiling

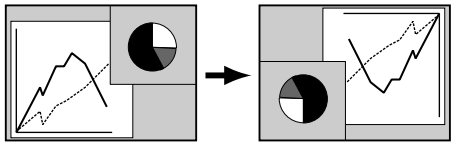

Rear

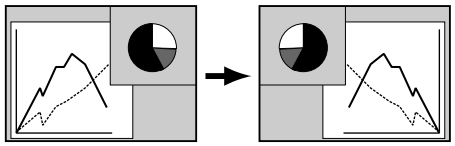

This arrow indicates that there are previous items. Select this item and press the Point Up button to go to the previous item.

Power management

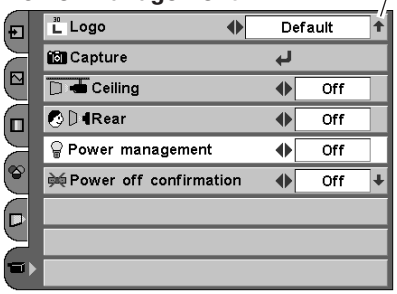

Time left until lamp off

Lamp mode

This function allows you to change brightness of the screen.

- ···· normal brightness
- ···· the controlled brightness according with input signal
- ···· lowers brightness and reduces the lamp power consumption.

Remote control

This projector has two different remote control codes: Code 1 (initial code) and Code 2. This switching function prevents remote control interference when operating several projectors or video equipment together.
When operating the projector in "Code 1", both the projector and the remote control must be switched to "Code 1".

To change the code of the projector;
Set the remote control code in the Setting Menu to "Code 2".

To change the code of the remote control;
Press both the MENU and the IMAGE button on the remote control together for over 10 seconds.

After changing the code, make sure the remote control operates properly.
To return to the initial code (Code 1), repeat the steps above.

Lamp counter reset

This function is used to reset the lamp replace counter. When replacing the projection lamp, reset the lamp replace counter by using this function. See page 46 for operation.

Factory default

This function returns all setting values except for the lamp counter to the factory default settings.

Lamp mode

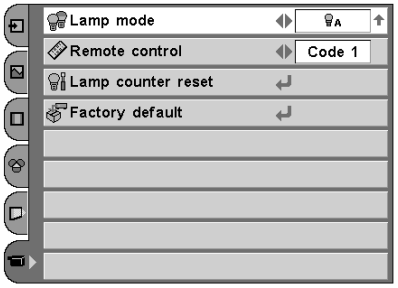

Factory default

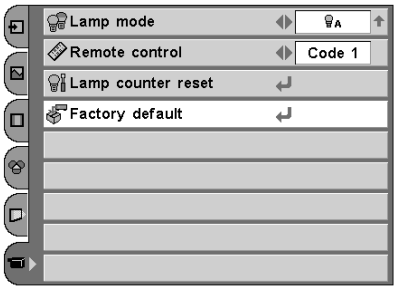

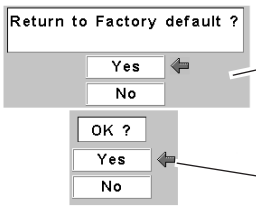

Select Factory default and this box appears. Select [Yes] , and the next box appears.

Select [Yes] to activate it.

NOTE

- *You can also select a lamp mode with the LAMP MODE (LAMP) button on the remote control. (p12)*
- *When the batteries of the remote control are replaced, the remote control code automatically returns to the initial code (Code 1).*

Warning Indicator

The WARNING indicator shows the state of the function which protects the projector. Check the state of the WARNING indicator and the POWER indicator to take proper maintenance.

The projector is shut down and the WARNING indicator is flashing red

When the temperature inside the projector exceeds the normal temperature, the projector is automatically shut down to protect the inside of the projector. The POWER indicator is flashing and the projector is being cooled down. When the temperature inside the projector returns to normal, the POWER indicator lights red and the projector can be turned on.

TOP CONTROL

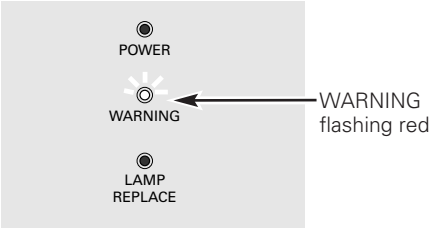

NOTE

- *After the temperature inside the projector returns to normal, the WARNING indicator still continues to flash. When the projector is turned on again, the WARNING indicator stops flashing.*

Then check the items below.

✓ Did you provide appropriate space for the projector to be ventilated? Check the installing condition to see if ventilation slots are not blocked.
✓ Is the projector not installed near the ventilation duct of air-conditioning equipment which may be hot? Install the projector away from the ventilation duct of air-conditioning equipment.
✓ Is the air filter clean? Clean the air filter or replace it with a new one.

The projector is shut down and the WARNING indicator lights red

When the projector detects an abnormal condition, it is automatically shut down to protect the inside and the WARNING indicator lights red. In this case, disconnect the AC power cord and reconnect it, and then turn the projector on once again for check. If the projector is turned off again and the WARNING indicator lights red, disconnect the AC power cord and call Boxlight at 1-800-762-5757 or 360-779-7901 for service.

TOP CONTROL

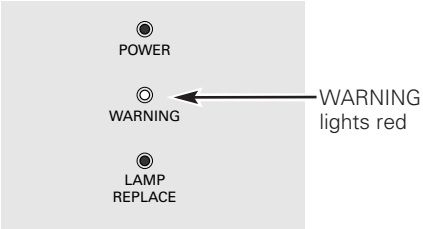

CAUTION
DO NOT LEAVE THE PROJECTOR WITH THE AC POWER CORD CONNECTED UNDER THE ABNORMAL CONDITION. IT MAY RESULT IN FIRE OR ELECTRIC SHOCK.

Cleaning the Air Filter

The air filter prevents dust from accumulating on the surface of the optical elements inside the projector. Should the air filter become clogged with dust particles, it will reduce cooling fans' effectiveness and may result in internal heat build up and adversely affect the life of the projector. Clean the air filter following the steps below.

1. Turn off the projector and disconnect the AC power cord from the AC outlet.
2. Turn over the projector and remove the air filter by pulling the latches on both edges upward.
3. Remove dust and dirt with a soft brush. Be careful not to damage the air filter and do not clean the air filter with water. When there is much dust and dirt on the air filter, replace it with a new one. (See below for replacing the air filter.)
4. Put the air filter back into position. Make sure that the air filter is properly and fully inserted.

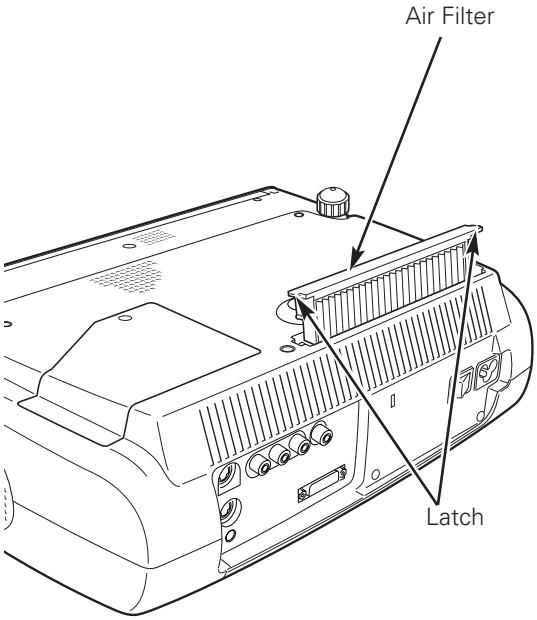

CAUTION

Do not operate the projector with the air filter removed. Dust may accumulate on the LCD panel and the projection mirror degrading picture quality.
Do not put small parts into the air intake vents. It may result in malfunction of the projector.

RECOMMENDATION

We recommend avoiding dusty/smoky environments when operating the projector. When using under dusty or smoky conditions, dust may accumulate on a lens, LCD panels, or optical elements inside the projector. This condition may degrade the quality of a projected image.
When the above symptoms are noticed, contact Boxlight at 1-800-762-5757 or 360-779-7901 for proper cleaning.

Replacing the Air Filter

When there is much dust and dirt on the air filter, replace it with a new one following the steps below.

1. After removing the air filter from the projector as described above, remove the replacement filter from the holder.
2. Holds the air filter with both hands, and remove the replacement filter by pulling it up.
3. Install a new replacement filter and put the air filter back into the projector.

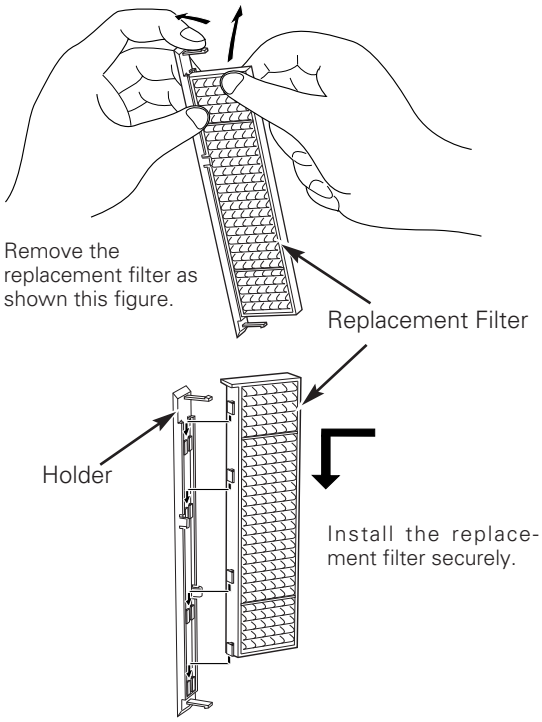

ORDER REPLACEMENT FILTER

Replacement filter can be ordered through your dealer or service station.

- **Replacement Filter Part No. : 610 312 0249**

Cleaning the Projection Lens

Follow these steps to clean the projection lens.

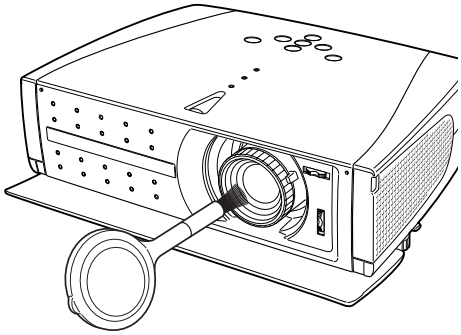

1. Disconnect the AC power cord before cleaning.
2. Softly wipe the projection lens with a cleaning cloth that contains a small amount of non-abrasive camera lens cleaner, or use lens cleaning paper or a commercially available air blower to clean the lens. Avoid using an excessive amount of cleaner. Abrasive cleaners, solvents, or other harsh chemicals might scratch the surface.
3. When the projector is not in use, replace the lens cover.

Cleaning the Projector Cabinet

Follow these steps to clean the projector cabinet.

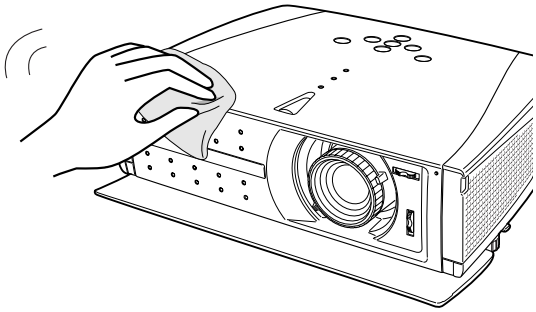

1. Disconnect the AC power cord before cleaning.
2. Softly wipe the projector body with a soft, dry cleaning cloth. When it is heavily soiled, use a small amount of mild detergent and finish with a soft, dry cleaning cloth. Avoid using an excessive amount of cleaner. Abrasive cleaners, solvents, or other harsh chemicals might scratch the surface.
3. When the projector is not in use, put the projector in the carrying case to protect it from dust and scratches.

Lamp Replacement

When the life of the projection lamp of this projector draws to an end, the LAMP REPLACE indicator lights yellow. If this indicator lights yellow, replace the lamp with a new one promptly.

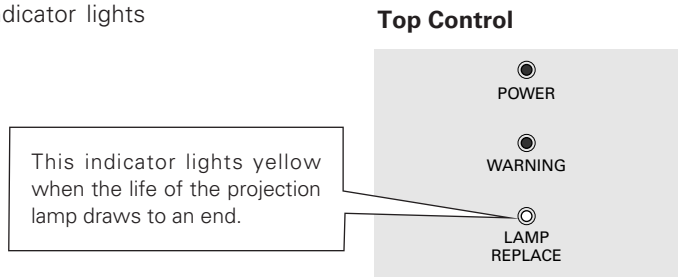

CAUTION

Allow a projector to cool, for at least 45 minutes before you open the Lamp cover. The inside of the projector can become very hot.

CAUTION

For continued safety, replace with a lamp of the same type. Do not drop a lamp or touch a glass bulb! The glass can shatter and may cause injury.

Follow these steps to replace the lamp.

1. Turn off the projector and disconnect the AC plug. Allow the projector to cool for at least 45 minutes.
2. Turn over the projector. Loosen the screw with a screwdriver, and remove the lamp cover.
3. Loosen 2 screws of the lamp with a screwdriver and pull out the lamp by grasping the handle.
4. Replace the lamp with a new one and tighten the 2 screws back into position. Make sure that the lamp is set properly. Replace the lamp cover and tighten the screw.
5. Connect the AC power cord to the projector and turn on the projector.
6. **Reset the Lamp replace counter.**
   See "Lamp Replace Counter" on the next page .

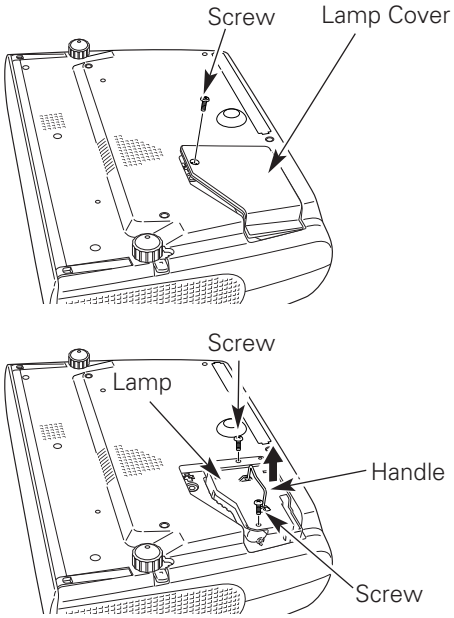

ORDER REPLACEMENT LAMP

Replacement Lamp can be ordered through Boxlight at 1-800-762-5757 or 360-779-7901. When ordering a Projection Lamp, give the following information to the dealer.

- **Model No. of your projector : Matinee 2HD**
- **Replacement Lamp Type No. : POA-LMP69**
  (Service Parts No. 610 309 7589)

Lamp Replace Counter

Be sure to reset the lamp replace counter after the lamp is replaced. When the lamp replace counter is reset, the LAMP REPLACE indicator stops lighting.

1 Turn the projector on, press the MENU button, and the On-Screen Menu will appear. Select the Setting Menu with the Point Up/Down button and press the Point Right button to enter the sub-menu.

2 Select the Lamp counter reset item and then press the SELECT button. The message "Lamp replace counter Reset?" is displayed. Choose [Yes] and then press the SELECT button.

3 Another confirmation dialog box appears and choose [Yes] to reset the Lamp replace counter.

Lamp counter reset

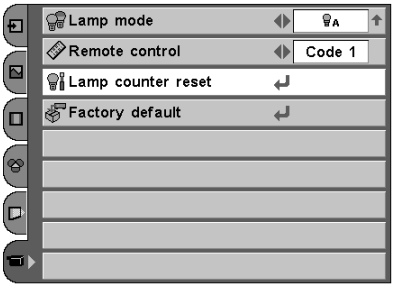

NOTE

- *Do not reset the Lamp replace counter without implementation of lamp replacement. Be sure to reset the Lamp replace counter only after replacing the lamp.*

LAMP HANDLING PRECAUTIONS

This projector uses a high-pressure lamp which must be handled carefully and properly. Improper handling may result in accidents, injury, or create a fire hazard.

- Lamp lifetime may differ from lamp to lamp and according to the environment of use. There is no guarantee of the same lifetime for each lamp. Some lamps may fail or terminate their lifetime in a shorter period of time than other similar lamps.

- If the projector indicates that the lamp should be replaced, i.e., if the LAMP REPLACE indicator lights up, replace the lamp with a new one IMMEDIATELY after the projector has cooled down.
  (Follow carefully the instructions in the Lamp Replacement section of this manual.) Continuous use of the lamp with the LAMP REPLACE indicator lighted may increase the risk of lamp explosion.

- A Lamp may explode as a result of vibration, shock or degradation as a result of hours of use as its lifetime draws to an end. Risk of explosion may differ according to the environment or conditions in which the projector and lamp are being used.

IF A LAMP EXPLODES, THE FOLLOWING SAFETY PRECAUTIONS SHOULD BE TAKEN.

If a lamp explodes, disconnect the projector's AC plug from the AC outlet immediately. Contact an authorized service station for a checkup of the unit and replacement of the lamp. Additionally, check carefully to ensure that there are no broken shards or pieces of glass around the projector or coming out from the cooling air circulation holes. Any broken shards found should be cleaned up carefully. No one should check the inside of the projector except those who are authorized trained technicians and who are familiar with projector service. Inappropriate attempts to service the unit by anyone, especially those who are not appropriately trained to do so, may result in an accident or injury caused by pieces of broken glass.

Troubleshooting

Before calling your dealer or service center for assistance, check the items below once again.

– Make sure you have properly connected the projector to peripheral equipment as described in "Connecting to Video Equipment" and "Connecting to a Computer" on page16 and 17.
– Make sure all equipment is connected to AC outlet and the power is turned on.
– When you operate the projector with a computer and it does not project an image, restart the computer.

Problem:	– Try these solutions.
No power	– Plug the power cord of the projector into the AC outlet. – See if the front cover is open and the POWER indicator lights red. – See if the Main On/Off switch is on. – Wait 90 seconds after the projector is turned OFF when turning the projector back on. The projector can be turned on after the POWER indicator turns red. (See "Turning Off the Projector" on page 18.) – Check the WARNING indicator. If the WARNING indicator lights red, the projector cannot be turned on. (See "Warning Indicator" on page 42.) – Check the projection lamp. (See page 45.) – Check the projector is installed on the flat surface.
Image is out of focus.	– Adjust focus of the projector. – Provide proper distance between the projector and the projection screen. (See page 14.) – Check the projection lens to see if it needs cleaning. (See page 44.) – Moving the projector from a cool temperature location to a warm temperature location may result in moisture condensation on the projection lens. In such an event, leave the projector OFF and wait until condensation disappears.
No image	– Check the connection between video equipment or your computer and the projector. – See if the input signal is correctly output from your computer. Some laptop computers may need changing the setting for monitor output when you are connecting a laptop computer. See your computer's user's guide for setting. – It takes about 30 seconds to display an image after turning on the projector. – See if the selected system is corresponding with video equipment or your computer. – Select correct input source once again through menu operation. – Make sure the temperature is not out of the Operating Temperature (5°C ~ 35°C).
Image is Left/Right reversed.	– Check the Ceiling / Rear item. (See "Setting" on page 40.)
Image is Top/Bottom reversed.	– Check the Ceiling item. (See "Setting" on page 40.)
Some displays are not seen during the Operation.	– Check the Display item. (See "Setting" on page 39 .)

Problem:	– Try these solutions.
The Remote Control does not work.	– Check the batteries. – Make sure no obstruction is between the projector and remote control. – Make sure you are not too far from the projector when using the remote control. Maximum operating range is 16.4' (5m). – Make sure the code of the remote control is conformed to that of the projector. (See page 41)

WARNING :
High voltages are used to operate this projector. Do not attempt to open the cabinet.

If the problem still persists after following all operating instructions, contact Boxlight for assistance at 1-800-762-5757 or 360-779-7901. Give the model number and explain about the problem. We will advise you how to obtain service.

Please have the following information available.

- Serial No. of projector
- Resolution of the computer
- Refresh rate of computer

This symbol on the nameplate means the product is Listed by Underwriters Laboratories Inc. It is designed and manufactured to meet rigid U.L. safety standards against risk of fire, casualty and electrical hazards.

The CE Mark is a Directive conformity mark of the European Community (EC).

Indicators and Projector Condition

Check the indicators for projector condition.

Indicators			Projector Condition
POWER **red/green**	WARNING **red**	LAMP REPLACE **yellow**	
●	●	●	The Main On/Off switch is off or the AC power cord is unplugged.
⊘	●	*	The projector is preparing for stand-by and the front cover is closed. Or the projection lamp is being cooled down. The projector cannot be turned on until cooling is completed.
⊘	●	*	The projector is ready to be turned on with the POWER ON-OFF button.
○	●	*	The projector is operating normally.
○	●	*	The projector is in the Power management mode.
⊘	⊘	*	The temperature inside the projector is abnormally high. The projector cannot be turned on. When the projector is cooled down enough and the temperature returns to normal, the POWER indicator lights red and the projector can be turned on. (The WARNING . indicator keeps flashing.) Check and clean the Air filter.
⊘	⊘	*	The projector has been cooled down enough and the temperature returns to normal. When turning on the projector, the WARNING indicator stops flashing. Check and clean the air filter.
●	⊘	*	The projector detects an abnormal condition and cannot be turned on. Unplug the AC power cord and plug it again to turn on the projector. If the projector is turned off again, disconnect the AC power cord and contact the dealer or the service center for service and checkup. Do not leave the projector on. It may cause electric shock or a fire hazard.

○ • • • lights green. ○ • • • flashes green. ⊘ • • • lights red. ⊘ • • • flashes red. ● • • • off

* When the life of the projection lamp draws to an end, the LAMP REPLACE indicator lights yellow. When this indicator lights yellow, replace the projection lamp with a new one promptly. Reset the Lamp replace counter after replacement of the lamp. See page 45 and 46.

Menu Tree

Video Input/Computer Input

- **Input**
  - Input 1
    - Auto → Go to **System** (1) or (2)
    - Video → Go to **System** (1)
    - S-Video → Go to **System** (1)
    - Y, Pb/Pc, Pr/Cr → Go to **System** (2)
  - Input 2
    - RGB(Analog) → Go to **System** (3)
    - RGB(PC Digital) → N/A
    - RGB(AV HDCP) → N/A
    - Component → Go to **System** (2)
    - RGB(Scart) → N/A

✻N/A - - - not applicable

Video Input

- **System** (1)
  - Auto
  - PAL
  - SECAM
  - NTSC
  - NTSC 4.43
  - PAL-M
  - PAL-N
- **System** (2)
  - Auto
  - 1080i
  - 1035i
  - 720p
  - 575p
  - 480p
  - 575i
  - 480i
- **Image Select**
  - Standard
  - Cinema
  - Game
  - Image 1
  - Image 2
  - Image 3
  - Image 4
- **Image Adjust**
  - Contrast — -31 ~ +31
  - Brightness — -31 ~ +31
  - Color — -31 ~ +31
  - Tint — -31 ~ +31
  - Color temp.
    - High
    - Mid
    - Low 1
    - Low 2
    - Low 3
  - Red — -31 ~ +31
  - Green — -31 ~ +31
  - Blue — -31 ~ +31
  - Sharpness — -7 ~ +7
  - Gamma — -7 ~ +7
  - Auto grayscale — On / Off
  - Progressive
    - Off
    - L1
    - L2
  - Film — On / Off
  - Reset — Yes / No
  - Store
    - Image 1
    - Image 2
    - Image 3
    - Image 4
    - Quit
- **Screen**
  - Full
  - Full through
  - Zoom
  - Caption IN
  - Normal
  - Normal through
  - Natural wide

Computer Input

System (3)
- Mode 1
- Mode 2
- SVGA 1
- - - -

✻Systems displayed in the System Menu vary depending on an input signal.

PC Adjust
- Auto PC Adj.
- Fine sync. — 0 ~ 31
- Total dots
- Horizontal
- Vertical
- Current mode
- Clamp
- Display area
  - 640 x 480
  - 720 x 400
  - 800 x 600
  - 1024 x 768
  - 1152 x 864
  - 1280 x 720
  - 1280 x 1024
  - Quit
- Display area - H
- Display area - V
- Full screen — On / Off
- Reset — Yes / No
- Mode free
- Store
  - Mode 1
  - Mode 2
  - Mode 3
  - Mode 4
  - Mode 5
  - Quit

Image Select
- Standard
- Real
- Image 1
- Image 2
- Image 3
- Image 4

Image Adjust
- Contrast — -31 ~ +31
- Brightness — -31 ~ +31
- Color temp.
  - High
  - Mid
  - Low 1
  - Low 2
  - Low 3
- Red — -31 ~ +31
- Green — -31 ~ +31
- Blue — -31 ~ +31
- Sharpness — -7 ~ +7
- Gamma — -7 ~ +7
- Auto grayscale — On / Off
- Reset — Yes / No
- Store
  - Image 1
  - Image 2
  - Image 3
  - Image 4
  - Quit

Screen
- Normal
- Full
- True
- Digital zoom

Setting

Setting
- Language
  - English
  - German
  - French
  - Italian
  - Spanish
  - Portuguese
  - Dutch
  - Swedish
  - Russian
  - Chinese
  - Korean
  - Japanese
  - Quit
- Keystone
- Blue back — On / Off
- Display — On / Off
- Background color
- Menu Position
- Logo
  - Off
  - Default
  - User
- Capture — Yes / No
- Ceiling — On / Off
- Rear — On / Off
- Power management — On / Off
- Power off confirmation — On / Off
- Lamp mode
- Remote control
  - Code 1
  - Code 2
- Lamp counter reset — Yes / No
- Factory default — Yes / No

Compatible Computer Specifications

Basically this projector can accept the signal from all computers with the V, H-Frequency below mentioned and less than 100 MHz of Dot Clock.

ON-SCREEN DISPLAY	RESOLUTION	H-Freq. (kHz)	V-Freq. (Hz)	ON-SCREEN DISPLAY	RESOLUTION	H-Freq. (kHz)	V-Freq. (Hz)
VGA 1	640 x 480	31.47	59.88	XGA 4	1024 x 768	56.476	70.07
VGA 2	720 x 400	31.47	70.09	XGA 5	1024 x 768	60.31	74.92
VGA 3	640 x 400	31.47	70.09	XGA 6	1024 x 768	48.50	60.02
VGA 4	640 x 480	37.86	74.38	XGA 7	1024 x 768	44.00	54.58
VGA 5	640 x 480	37.86	72.81	XGA 8	1024 x 768	63.48	79.35
VGA 6	640 x 480	37.50	75.00	XGA 9	1024 x 768	36.00	87.17 (Interlace)
VGA 7	640 x 480	43.269	85.00	XGA 10	1024 x 768	62.04	77.07
MAC LC13	640 x 480	34.97	66.60	XGA 11	1024 x 768	61.00	75.70
MAC 13	640 x 480	35.00	66.67	XGA 12	1024 x 768	35.522	86.96 (Interlace)
575i	———	15.625	50.00 (Interlace)	XGA 13	1024 x 768	46.90	58.20
480i	———	15.734	60.00 (Interlace)	XGA 14	1024 x 768	47.00	58.30
SVGA 1	800 x 600	35.156	56.25	XGA 15	1024 x 768	58.03	72.00
SVGA 2	800 x 600	37.88	60.32	MAC 19	1024 x 768	60.24	75.08
SVGA 3	800 x 600	46.875	75.00	MAC 21	1152 x 870	68.68	75.06
SVGA 4	800 x 600	53.674	85.06	SXGA 1	1152 x 864	64.20	70.40
SVGA 5	800 x 600	48.08	72.19	SXGA 11	1152 x 900	61.20	65.20
SVGA 6	800 x 600	37.90	61.03	SXGA 13	1280 x 1024	50.00	86.00 (Interlace)
SVGA 7	800 x 600	34.50	55.38	SXGA 14	1280 x 1024	50.00	94.00 (Interlace)
SVGA 8	800 x 600	38.00	60.51	SXGA 17	1152 x 900	61.85	66.00
SVGA 9	800 x 600	38.60	60.31	SXGA 18	1280 x 1024	46.43	86.70 (Interlace)
SVGA 10	800 x 600	32.70	51.09	480p	———	31.47	59.88
SVGA 11	800 x 600	38.00	60.51	575p	———	31.25	50.00
MAC 16	832 x 624	49.72	74.55	720p	———	45.00	60.00
XGA 1	1024 x 768	48.36	60.00	1035i	———	33.75	60.00 (Interlace)
XGA 2	1024 x 768	68.677	84.997	1080i	———	33.75	60.00 (Interlace)
XGA 3	1024 x 768	60.023	75.03	1080i	———	28.125	50.00 (Interlace)

When an input signal is digital from DVI terminal, refer to the chart below.

ON-SCREEN DISPLAY	RESOLUTION	H-Freq. (kHz)	V-Freq. (Hz)	ON-SCREEN DISPLAY	RESOLUTION	H-Freq. (kHz)	V-Freq. (Hz)
D-VGA	640 x 480	31.47	59.94	D-SXGA 3	1280 x 1024	31.65	29.80
D-480p	———	31.47	59.88	D-720p	———	45.00	60.00
D-575p	———	31.25	50.00	D-1035i	———	33.75	60.00 (Interlace)
D-SVGA	800 x 600	37.879	60.32	D-1080i	———	33.75	50.00 (Interlace)
D-XGA	1024 x 768	43.363	60.00	D-1080i	———	28.125	60.00 (Interlace)
D-SXGA 2	1280 x 1024	60.276	58.069				

Technical Specifications

Projector Type	Multimedia Projector
Dimensions (W x H x D)	14.13" x 3.82" x 10.79" (359mm x 97mm x 274mm) (not including raised portions)
Net Weight	9.0 lbs (4.1 kg)
LCD Panel System	0.7" wide TFT Active Matrix type, 3 panels
Panel Resolution	1280 x 720 dots
Number of Pixels	2,764,800 (1280 x 720 x 3 panels)
Color System	PAL, SECAM, NTSC, NTSC4.43, PAL-M, and PAL-N
High Definition TV Signal	480i, 480p, 575i, 575p, 720p, 1035i, and 1080i
Scanning Frequency	H-sync. 15 ~ 80 KHz, V-sync. 50 ~ 100 Hz
Projection Image size (Diagonal)	Adjustable from 31" to 200"
Projection Lens	F 2.04 ~ 2.54 lens with f 21.5 mm ~ 27.7 mm with manual zoom and focus
Throw Distance	3.9' ~ 20.0' (1.2 m ~ 6.1 m)
Projection Lamp	135 W
Video Input Jacks	RCA Type x 4 (Video, Y, Pb/Cb, Pr/Cr) and Mini DIN 4 pin x 1 (S-Video)
Computer/Video Input Terminal	DVI-I Terminal (Digital/Analog) (HDCP compatible)
Service Port Connector	Mini DIN 8 pin x 1
Feet Adjustment	0˚ to 11.8˚
Voltage and Power Consumption	AC 100 ~ 120 V (2.4 A Max. Ampere), 50 / 60 Hz (The U.S.A. and Canada) AC 200 ~ 240 V (1.3 A Max. Ampere), 50 / 60 Hz (Continental Europe)
Operating Temperature	41 ˚F ~ 95 ˚F (5 ˚C ~ 35 ˚C)
Storage Temperature	14 ˚F ~ 140 ˚F (-10 ˚C ~ 60 ˚C)
Remote Control	Power Source : AA, UM3 or R06 Type x 2 Operating Range : 16.4' (5m) / ±30˚ Dimensions : 1.85" x 1.18" x 6.26" (47mm x 30mm x 159mm) Net Weight : 4.4oz (125g) (including batteries)
Accessories	User's Guide AC Power Cord Remote Control and Batteries Video Cable

- The specifications are subject to change without notice.
- LCD panels are manufactured to the highest possible standards. Even though 99.99% of the pixels are effective, a tiny fraction of the pixels (0.01% or less) may be ineffective by the characteristics of the LCD panels.
- The On-Screen Menu and figures in this manual may differ slightly from the product.

Dimensions

Unit : inch (mm)

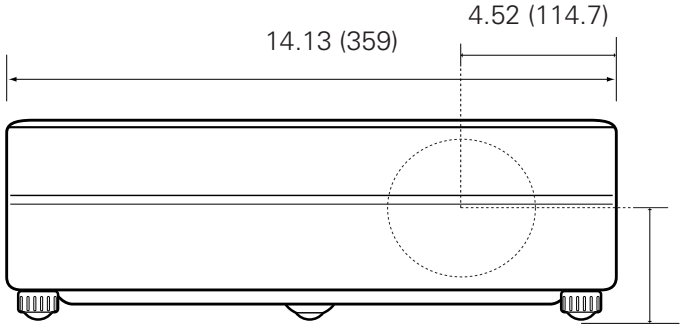

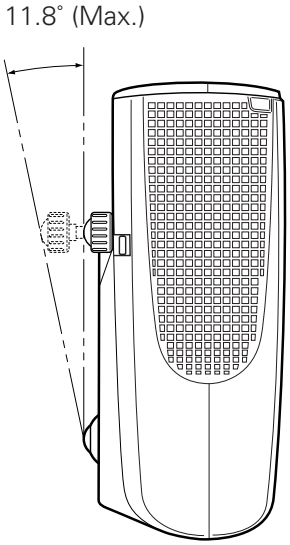

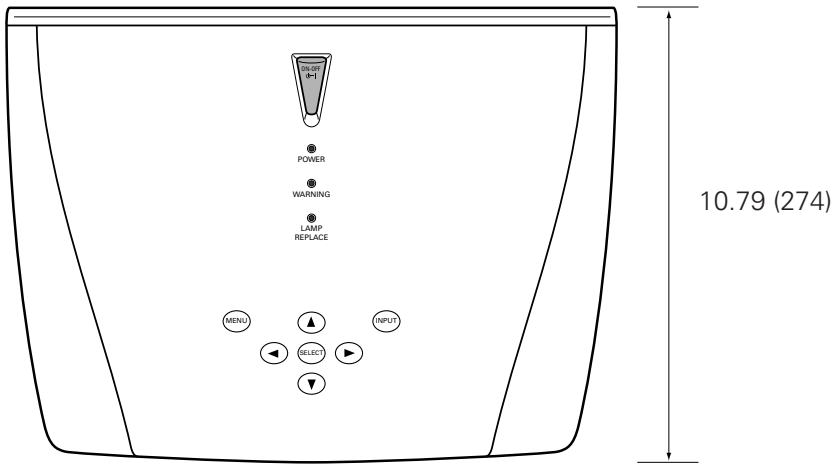

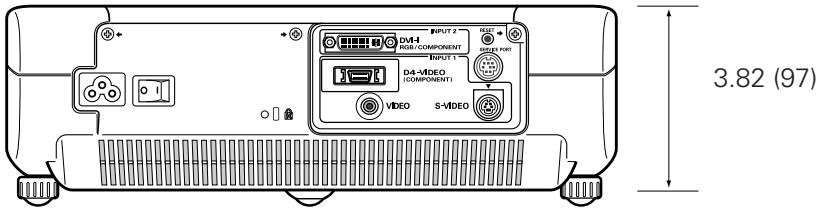

Configurations of Terminal

DVI-I RGB/COMPONENT TERMINAL (DIGITAL/ANALOG)

Terminal : DVI-I

Pin Configuration

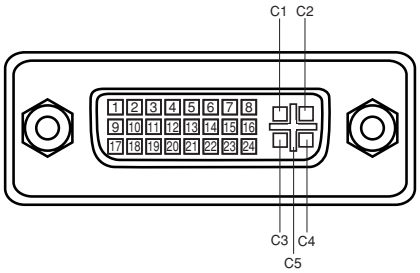

C1	Analog Red Input
C2	Analog Green Input
C3	Analog Blue Input
C4	Analog Horiz. sync
C5	Analog Ground (R/G/B)

1	T.M.D.S. Data2–	**9**	T.M.D.S. Data1–	**17**	T.M.D.S. Data0–
2	T.M.D.S. Data2+	**10**	T.M.D.S. Data1+	**18**	T.M.D.S. Data0+
3	T.M.D.S. Data2 Shield	**11**	T.M.D.S. Data1 Shield	**19**	T.M.D.S. Data0 Shield
4	No Connect	**12**	No Connect	**20**	No Connect
5	No Connect	**13**	No Connect	**21**	No Connect
6	DDC Clock	**14**	+5V Power	**22**	T.M.D.S. Clock Shield
7	DDC Data	**15**	Ground (for +5V)	**23**	T.M.D.S. Clock+
8	Analog Vert. sync	**16**	Hot Plug Detect	**24**	T.M.D.S. Clock–

Optional Parts

The parts listed below are optionally supplied. When ordering those parts, give the name and Type No. to the sales dealer.

- **Wall Anchor Kit** — **Type No. : POA-CH-EX01**
- **DVI Cable** — **Type No. : KA-DV20**
- **DVI-VGA Cable** — **Type No. : POA-CA-DVIVGA**
- **Component Cable (32.8'/10m)** — **Type No. : POA-CA-COMP10**
- **Component-DVI Cable (15.6"/40cm)** — **Type No. : POA-CA-DVIC**
  (Component side is a female type.)
- **Scart-DVI Cable** — **Type No. : POA-CA-DVISC**
  (This cable is used for RGB Scart 21-Pin Video output of video equipment.)

LIMITED WARRANTY

BOXLIGHT Corporation ("BOXLIGHT") warrants that each Matinee 2HD ("the Product") sold hereunder will conform to and function in accordance with the written specifications of BOXLIGHT. Said limited warranty shall apply only to the first person or entity that purchases the Product for personal or business use and not for the purpose of distribution or resale. Said warranty shall continue for a period of three (3) years from the date of such purchase. The standard limited warranty excludes the lamps in projectors after 120 days and the accessories after one year. BOXLIGHT does not warrant that the Product will meet the specific requirements of the first person or entity that purchases the Product for personal or business use. BOXLIGHT's liability for the breach of the foregoing limited warranty is limited to the repair or replacement of the Product or refund of the purchase price of the Product, at BOXLIGHT's sole option. Replacement Product may be re-furbished in "like-new" condition, at BOXLIGHT's sole discretion. To exercise the Purchaser's rights under the foregoing warranty, the Product must be returned at the Purchaser's sole cost and expense, to BOXLIGHT or to any authorized BOXLIGHT service center provided, and the Product must be accompanied by a written letter explaining the problem and which includes (i) proof of date of purchase; (ii) the dealer's name; and (iii) the model and serial number of the Product. When sending your unit in for repair, please ship your unit in its original packing material or a BOXLIGHT approved ATA Shipping Case, or have a professional packaging company pack the unit. Please insure your shipment for its full value. **A return authorization number, issued by the BOXLIGHT customer service department, must also be clearly displayed on the outside of the shipping carton containing the Product.**

WARRANTY LIMITATION AND EXCLUSION

BOXLIGHT shall have no further obligation under the foregoing limited warranty if the Product has been damaged due to abuse, misuse, neglect, accident, unusual physical or electrical stress (unusual physical and electrical stress includes unusually long operation, exposure to smoke and other airborne contaminants), unauthorized modifications, tampering, alterations,
or service other than by BOXLIGHT or its authorized agents, causes other than from ordinary use or failure to properly use the Product in the application for which said Product is intended.

DISCLAIMER OF UNSTATED WARRANTIES

THE WARRANTY PRINTED ABOVE IS THE ONLY WARRANTY APPLICABLE TO THIS PURCHASE. ALL OTHER WARRANTIES, EXPRESS OR IMPLIED, INCLUDING, BUT NOT LIMITED TO, THE IMPLIED WARRANTIES OF MERCHANTABILITY AND FITNESS FOR A PARTICULAR PURPOSE ARE DISCLAIMED. THERE ARE NO WARRANTIES THAT EXTEND BEYOND THE FACE HEREOF AND THE FOREGOING WARRANTY SHALL NOT BE EXTENDED, ALTERED OR VARIED EXCEPT BY WRITTEN INSTRUMENT SIGNED BY BOXLIGHT. SOME STATES DO NOT ALLOW LIMITATIONS ON HOW LONG AN IMPLIED WARRANTY MAY LAST, SO SUCH LIMITATIONS MAY NOT APPLY TO YOU.

LIMITATION OF LIABILITY

IT IS UNDERSTOOD AND AGREED THAT BOXLIGHT'S LIABILITY WHETHER IN CONTRACT, IN TORT, UNDER ANY WARRANTY, IN NEGLIGENCE OR OTHERWISE SHALL NOT EXCEED THE RETURN OF THE AMOUNT OF THE PURCHASE PRICE PAID BY PURCHASER AND UNDER NO CIRCUMSTANCES SHALL BOXLIGHT BE LIABLE FOR SPECIAL, INDIRECT, INCIDENTAL OR CONSEQUENTIAL DAMAGES OR LOST PROFITS, LOST REVENUES OR LOST SAVINGS. THE PRICE STATED FOR THE PRODUCT IS A CONSIDERATION IN LIMITING BOXLIGHT'S LIABILITY. NO ACTION, REGARDLESS OF FORM, ARISING OUT OF THE AGREEMENT TO PURCHASE THE PRODUCT MAY BE BROUGHT BY PURCHASER MORE THAN ONE YEAR AFTER THE CAUSE OF ACTION HAS ACCRUED. SOME STATES DO NOT ALLOW THE EXCLUSION OR LIMITATION OF INCIDENTAL OR CONSEQUENTIAL DAMAGES SO THE ABOVE LIMITATION OR EXCLUSION MAY NOT APPLY TO YOU. THIS LIMITED WARRANTY GIVES YOU SPECIFIC LEGAL RIGHTS, AND YOU MAY ALSO HAVE OTHER RIGHTS THAT VARY FROM STATE TO STATE.

STUDIO experience®
A division of BOXLIGHT Corporation.

BOXLIGHT®
Presenting a Better Way

Boxlight
19332 Powder Hill Place
Poulsbo, WA 98370-7407 USA
www.boxlight.com
U.S. and Canada 800-762-5757
International 1-360-779-7901

Printed in Japan
Part No. 610 312 1789 (1AA6P1P4411-- M4KE)