USA's primary source for projector lamps

myprojectorlamps

PROJECTOR OWNER'S MANUAL

# Boxlight

# LP730

**Need a replacement lamp for this projector?**

**www.myprojectorlamps.com**

Original manufacturer manual, provided unmodified as a courtesy of MyProjectorLamps.com.
All trademarks belong to their respective owners.

# QUICK START

LitePro 720/730

1 Rotate the CableWizard selector to expose the correct connectors for your computer.

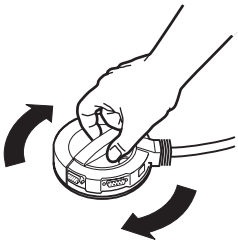

Macintosh® or PowerBook™? →

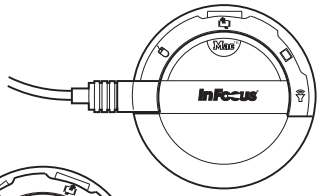

IBM®-compatible PC? →

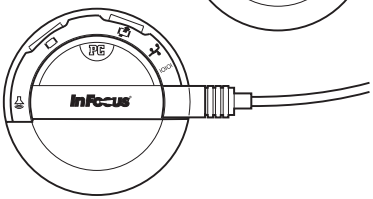

2 Plug the CableWizard into the projector.

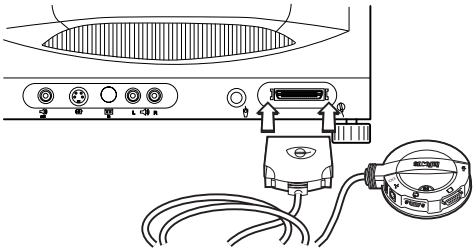

3 Unplug the cable that connects your monitor to your computer.

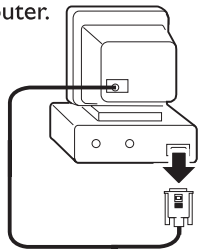

4 Attach the CableWizard to your computer.

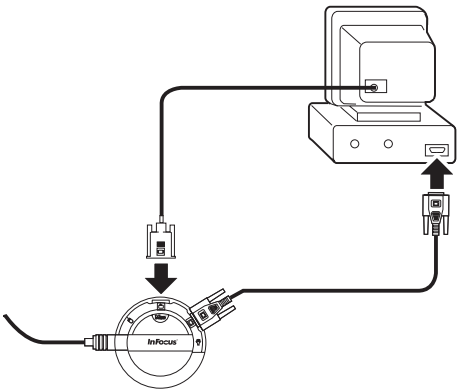

5 Plug the power cord into the projector and into an electrical outlet.

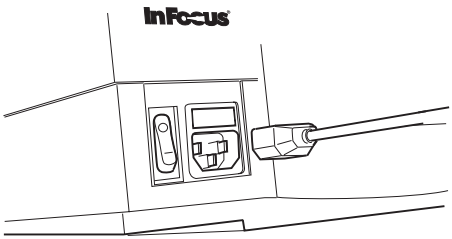

6 Turn on the projector. Turn on your monitor. Turn on your computer. Refer to the *LitePro 720/730 User's Guide* for more information.

InFocus®

009-0290-01 (English)

# QUICK START

LitePro 720/730

**SAFETY SUMMARY** : Please read these instructions before using your LitePro. Failure to comply could result in fire, electrical shock, personal injury or equipment damage.

**Definition of Safety Icons on Product Labels**

Refer to the User's Guide for more information.

Avoid hot surfaces.

**Don't Look Into The Lens!**

Be extremely careful not to look directly into the lens when the projector is on. The bright light can harm your eyes. Be especially careful to keep children from looking into the lens.

**Don't Disassemble**

Do not open the projector's case! Doing so exposes you to an electric shock hazard. Except for the projection lamp, there are no user-serviceable parts. All service must be performed by an In Focus Authorized Service Provider.

**Avoid Hot Surfaces**

The inside of the projector lamp housing can be very hot. Allow the projector to cool for at least 2 minutes before opening the lamp door to replace the lamp. Use extreme care. Avoid touching the hot surfaces inside.

**Use Only The 720/730 Power Cord**

Always use the power cord that came with the projector. Although other cords might look the same, they have not been safety-tested with the 720 or 730. Never use the power cord if it's damaged or frayed. When you disconnect the projector, always remove the power cord from the electrical outlet first, then from the projector.

**Don't Defeat The Purpose Of The Grounding Plug**

The projector is grounded through the grounding conductor on the power cord. To avoid electric shock, plug the power cord into a properly wired receptacle.

**Avoid Liquid Spills**

Don't set drinks on top of the projector. Spilled liquids can flow inside causing damage.

**Don't Block Ventilation**

Openings in the case provide ventilation to protect the projector from overheating. Keep loose papers and other objects away from the grills. Don't place the projector on top of or close to a computer or other heat-producing equipment.

InFocus®

## TABLE OF CONTENTS


**Safety Summary** **iii**

**Introduction** **1**
Image Resolution 1
Compatibility 2
Unpacking the Projector 2
Usage Guidelines 5
If You Need Assistance 5
Warranty 5

**Setting up the Projector** **7**
Connecting the CableWizard™ to the Projector 8
Selecting Connectors on the CableWizard 8
Preparing to Connect Your Equipment to the Projector 10
Connecting an IBM-Compatible Laptop Computer 11
Connecting an IBM-Compatible Desktop Computer 13
Connecting an Apple PowerBook Computer 15
Connecting a Macintosh Desktop Computer 17
Connecting a Video Player 19
Connecting an External Speaker 21
Powering up the Projector and Adjusting the Image 21
Turning Off the Projector 22

**Using the Projector** **23**
Basic Image Adjustment 23
Using the Remote Control 23
Adjusting the Projector 25
Using the Keypad Buttons 27
Using the On-Screen Menus 29
Display Menu Functions 31
Audio Menu Functions 33
Image Menu Functions 35
Controls Menu Functions 37

**Maintenance** **39**
Cleaning the Lens 39
Cleaning the Fan Intake Filter 39
Replacing the Projection Lamp 41
Replacing the Batteries in the Remote Control 43
Using the Kensington Lock 43

**Troubleshooting** **45**
Solutions to Common Problems 46

**Appendix** **51**
Specifications 51
Accessories 53
Portable and Laptop Activation Chart 55
Using Video Mirroring with a PowerBook Computer 59
Projected Image Size 60

**Index** **63**

## SAFETY SUMMARY

Please read these instructions carefully before using your LitePro 720 or 730. Failure to comply with them could result in fire, electrical shock, personal injury or damage to equipment.

These graphics are used throughout this manual to draw your attention to important information about the projectors.

***NOTE***: *Additional useful details or tips.*

***CAUTION***: *Steps to take to avoid damage to your equipment.*

***WARNING***: *Steps to take to avoid personal injury.*

These graphics are used on LitePro labels.

**Attention** - Refer to this User's Guide for important safety information.

**Hot Surfaces** - Avoid touching hot surfaces. Do not touch until the LitePro has cooled.

**Do Not Look Into The Lens!**

Be extremely careful not to look into the projection lens when the LitePro is turned on. The bright light may harm your eyes. Be especially careful to keep children from looking into the lens.

**Power Source**

Use only a three-wire grounding type power source. The power source should not exceed 250 volts rms between the supply conductors or between either conductor and the ground.

**Power Cord**

Use only the power cord that was shipped with the LitePro. Although other power cords might be similar in appearance, they have not been safety-tested with the projector. Do not use a power cord if it has become damaged or frayed. Contact your In Focus dealer or call In Focus if you need to replace your power cord.

### Grounding

The projector is grounded through the grounding conductor on the power cord. To avoid electric shock, plug the power cord into a properly wired receptacle. Do not defeat the purpose of the grounding-type plug.

### Lamp

To avoid overheating and unacceptable image quality, replace the projection lamp with a lamp of the specified type. Refer to page 51 for lamp specifications and to page 41 for instructions on replacing the lamp.

### Lamp Compartment

To avoid burns, do not open the lamp module door until the projector is turned off and the lamp has cooled for at least 2 minutes. Follow the instructions in this manual for lamp replacement carefully.

### Hot Surfaces

Allow the projector to cool at least 2 minutes before replacing a lamp. When you open the lamp housing, be very careful not to touch the hot surfaces inside.

### Ventilation and Overheating

Openings in the projector case provide ventilation to protect it from overheating. Keep loose papers and other objects well away from the grills. Do not place the projector on top of or close to a computer or other heat-producing equipment.

### Liquid Spills

Do not set drinks on top of the projector. Spilled liquids can flow inside and cause damage.

***NOTE**: If you open the LitePro case, you will void the warranty.*

### Do Not Disassemble

All LitePro service must be performed by an authorized In Focus service center. The only user-serviceable part in the LitePro is the projection lamp, which you can replace by opening the lamp cover on the bottom of the projector (see page 41). Do not open any other part of the LitePro. If your LitePro needs repair, call In Focus Technical Support as described on page 5. Before you call Technical Support, you may want to refer to “Troubleshooting” starting on page 45 to see if you can resolve the problem yourself.

# INTRODUCTION

The In Focus LitePro® 720 and 730 lightweight multimedia projectors combine powerful and sophisticated features with easy-to-use, intuitive controls. Built-in multimedia features include audio, a palette of 16.7 million colors and active matrix liquid crystal display (LCD) technology. The 700 series projectors are ideal for high-performance business, training and imaging applications that demand exceptional color quality. The 720 has SVGA graphics, the 730 has XGA graphics. The user interfaces of the two products are identical; information in this User's Guide applies to both products.

## Image Resolution

### LitePro 720

The SVGA resolution of the 720's projected image is 800x600. Screen resolutions between 800x600 and 1024x768 are compressed to 800x600. The 720 cannot compress screen resolutions above 1024x768. If your computer's screen resolution is higher than 1024x768, reset it to a lower resolution before you connect the 720.

### LitePro 730

The XGA resolution of the 730's projected image is 1024x768. Screen resolutions between 1024x768 and 1280x1024 are compressed to 1024x768. The 730 cannot compress screen resolutions above 1280x1024. If your computer's screen resolution is higher than 1280x1024, reset it to a lower resolution before you connect the 730.

***NOTE:*** *The 720 automatically expands 640x480 images to 800x600. You can display these images at 640x480 by turning off the Auto Resize feature. See "Auto Resize" on page 35 for more information.*

***NOTE:*** *The 730 automatically expands 640x480 and 800x600 images to 1024x768. You can display these images at their original resolutions by turning off the Auto Resize feature. See "Auto Resize" on page 35 for more information.*

## Compatibility

The projector is compatible with a wide variety of computers and video devices, including:

- IBM-compatible computers, including laptops, up to 1024x768 resolution (LitePro 720) or 1280x1024 resolution (LitePro 730) at 75 Hz.
- Apple Macintosh and PowerBook computers up to 1024x768 resolution (LitePro 720) or 1280x1024 resolution (LitePro 730).
- Most standard VCRs, camcorders and laser disc players.

***NOTE:*** *Selected workstations are also supported. Contact your In Focus dealer for details.*

## Unpacking the Projector

The projector comes with the items shown in Figure 1. Check to make sure all are included. Contact your In Focus dealer immediately if anything is missing.

If you are experienced in setting up presentation systems, use the *LitePro 720/730 Quick Start* card that was included in the shipping box. For complete details on connecting and operating the projector, refer to this User's Guide. User's Guides are also available for download from our website at www.infocus.com.

***NOTE:*** *The contents of your shipping box may vary depending on the LitePro configuration you've ordered.*

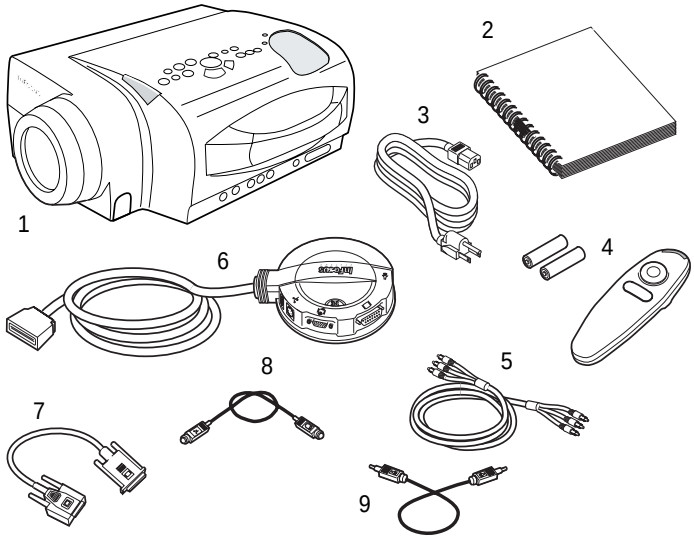


**FIGURE 1**

*Shipping box contents*

1. LitePro 720 or 730 projector
2. *LitePro 720/730 User's Guide*
3. power cord
4. remote and batteries
5. RCA audio/video (A/V) cable
6. CableWizard
7. CableWizard computer cable
8. CableWizard mouse cable
9. CableWizard audio cable

Not shown: Quick Start card, online user guide CD-ROM, lens cap

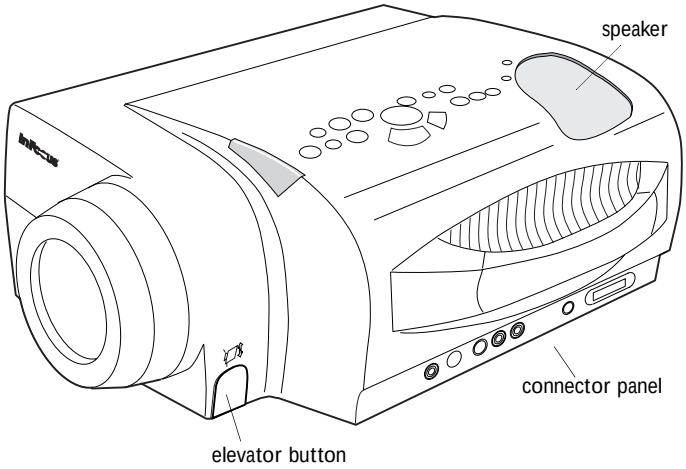


**FIGURE 2**

*Side view of LitePro*

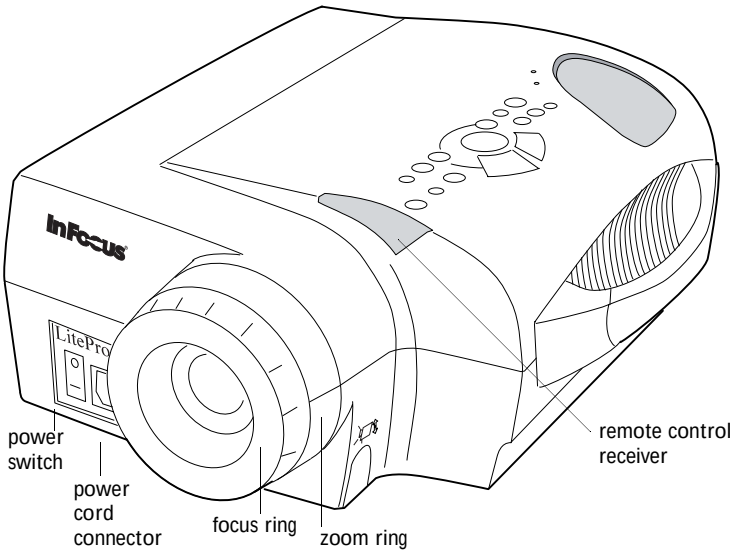


**FIGURE 3**

*Front view of LitePro*

## Usage Guidelines

- Do not look directly into the projection lens when the projector is turned on. The bright light may harm your eyes.
- Do not block the grills on the projector. Restricting the air flow can cause it to overheat and turn off.
- Handle the projector as you would any product with glass components. Be especially careful not to drop it.
- Avoid leaving the projector in direct sunlight or extreme cold for extended periods of time. If this happens, allow it to reach room temperature before use.
- Transport the projector in a vendor-approved hard or soft case. Part numbers for these cases are listed on page 53. Call your In Focus dealer to order.

***NOTE**: If the LitePro overheats and turns off, you must wait about 30 seconds before you attempt to turn it back on.*

## If You Need Assistance

The first place to look for help is in this manual. Be sure to check the guidelines in “Troubleshooting” on page 45.

If this manual doesn’t answer your question, call your In Focus dealer. You can also call In Focus Customer Service directly at **1-800-799-9911**. Call between 6 a.m. and 5 p.m. PST, Monday through Friday. In Europe, call In Focus in The Netherlands at **(31) 23-5623200**. In Singapore, call **(65) 740-6435**. Or, send us an e-mail at **techsupport@infocus.com**

Our World Wide Web address is **http://www.infocus.com**.

## Warranty

This product is backed by a limited one-year warranty. The details of the warranty are printed at the back of this manual. Longer term warranties can be purchased from your In Focus dealer. Refer to page 54 for part numbers.

## SETTING UP THE PROJECTOR

**1** Place the projector on a flat surface.

- The projector must be within 10 feet (3 m) of your power source and within 10 feet of your computer.
- If you want to project from behind a translucent screen, set up the projector behind your screen. See “Rear Projection” on page 38 to reverse the image.
- If you are installing the projector on the ceiling, refer to the *LitePro 700 Series Ceiling Mount Installation Guide* that comes with the Ceiling Mount Kit for more information. To turn the image upside down, see “Ceiling” on page 38. The Ceiling Mount Kit is sold separately; see page 54.

**2** Position the projector the desired distance from the screen.

- The distance from the lens of the projector to the screen determines the size of the projected image. Figure 4 shows three projected image sizes using the lens at minimum focusing distance. For more information about image size, see “Projected Image Size” on page 60.

**3** Make sure the projector and your computer are turned off.

***NOTE**: An optional extension cable, sold separately, lets you increase the distance between the projector and your computer to 70 feet (21 m). See “Accessories” on page 53.*

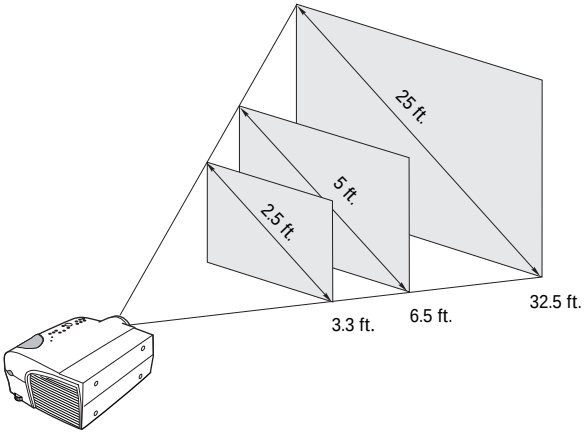


**FIGURE 4**

*Projected image size (minimum focusing distance)*

**CAUTION:** *Turn off the computer, monitor and projector whenever you connect or disconnect cables.*

**NOTE:** *LitePro 730 is optimized for use with CableWizard II. If you have CableWizards from other models of In Focus projectors, we do not recommend using them with the LitePro 730. Image quality is reduced by using a CableWizard other than Cable Wizard II. The label on the bottom reads CableWizard or CableWizard II.*

**NOTE:** *You must disconnect all cables before turning the selector on the CableWizard.*

## Connecting the CableWizard™ to the Projector

The CableWizard simplifies the connection process by providing a central hub for all the connections between the projector and your computer. The connectors on the CableWizard are labeled with icons.

Connect the end of the CableWizard cable to the connector on the projector's connector panel (Figure 5).

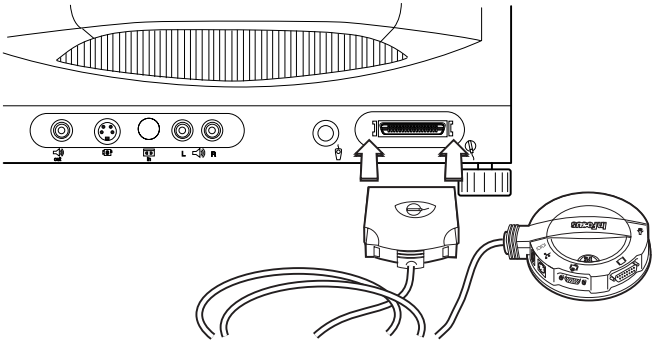

**FIGURE 5**

*Connecting the CableWizard to the projector*

## Selecting Connectors on the CableWizard

Turn the selector on the top of the CableWizard to reveal the correct connectors for your computer.

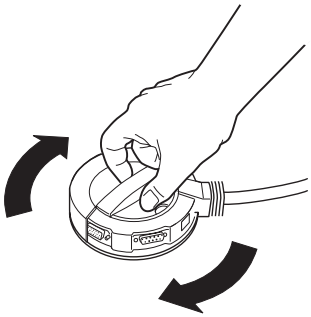

**FIGURE 6**

*Selecting connectors on the CableWizard*

- If you're connecting an **IBM-compatible desktop or laptop computer**, turn the selector until the window displays "PC."

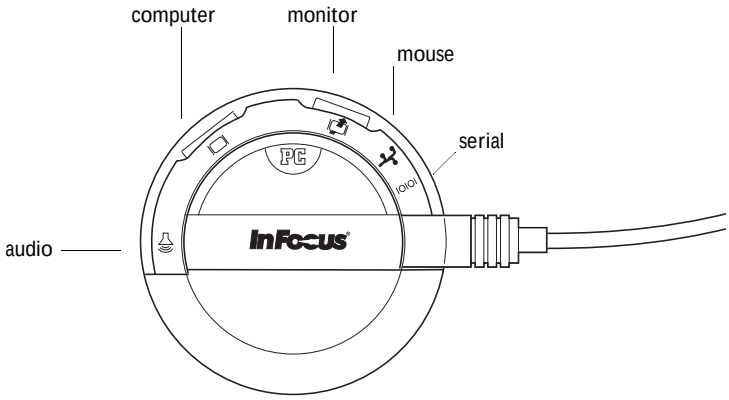


**FIGURE 7**

*Selecting the IBM-compatible connectors on the CableWizard*

- If you're connecting a **Macintosh desktop or an Apple PowerBook computer**, turn the selector until the window displays "Mac™."

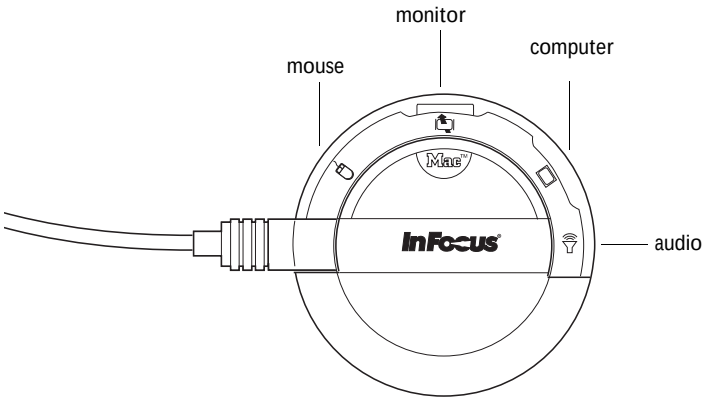


**FIGURE 8**

*Selecting the Macintosh connectors on the CableWizard*

***NOTE:*** *The serial connector is provided for use with a command center for a fixed installation.*

*NOTE: Before you continue, make sure the projector and your equipment are turned off. If you're connecting a computer, make sure the distance between it and the projector is 10 feet or less and you've selected the appropriate connectors on the CableWizard.*

*NOTE: In some older computers, the monitor connector does not have a hole for Pin 9. If you have trouble connecting the CableWizard computer cable to your computer, contact In Focus Technical Support.*

## Preparing to Connect Your Equipment to the Projector

Now you're ready to connect your equipment. Computers are connected to the CableWizard. Video players and other equipment, such as external speakers, are connected directly to the projector.

Steps for connecting the different types of equipment are given on the pages listed below.

| Equipment you want to connect | Page |
|---|---|
| IBM-compatible laptop computer | page 11 |
| IBM-compatible desktop computer | page 13 |
| Apple PowerBook | page 15 |
| Macintosh desktop computer | page 17 |
| Video player | page 19 |
| External speaker | page 21 |

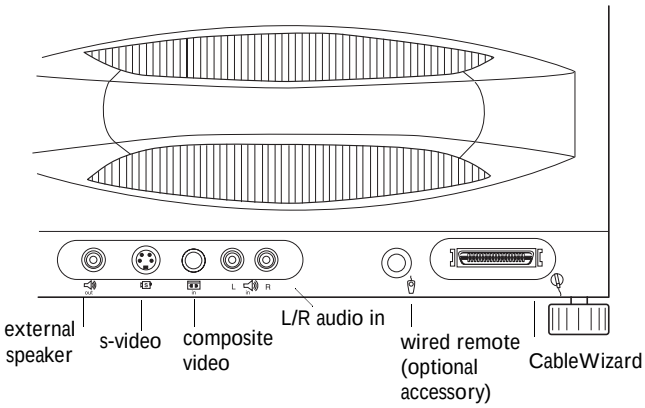


**FIGURE 9**

*LitePro connector panel*

## Connecting an IBM-Compatible Laptop Computer

**1** Plug the end of the CableWizard computer cable into the video connector on your computer.

**2** Plug the end of the CableWizard computer cable into the connector on the CableWizard.

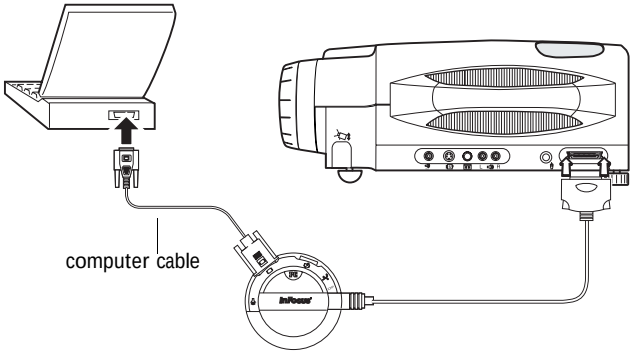


**FIGURE 10**

*Connecting the CableWizard computer cable to an IBM-compatible laptop computer*

**Do you want to play your computer's audio on the projector?**

**1** Plug either end of the CableWizard audio cable into the audio connector on your computer.

**2** Plug the other end of the audio cable into the connector on the CableWizard.

***NOTE:*** *Many laptop computers do not automatically turn on their external video port when a secondary display device such as a projector is connected. Refer to your computer manual for the command that activates the external video port. Activation commands for some laptop computers are listed in the Appendix of this manual on page 55.*

***NOTE:*** *If you don't want audio or mouse control, you can use the CableWizard Lite with your IBM-compatible computer. CableWizard Lite is ordered separately. See "Accessories" on page 53.*

**Do you want to control the computer's mouse from the projector's remote or keypad?**

1 Locate the mouse cable and unplug it from your computer.

2 Plug the end of the CableWizard mouse cable into the mouse connector on your computer.

3 Plug the end of the CableWizard mouse cable into the connector on the CableWizard.

***NOTE**: Most laptop computers do not allow you to use the computer's pointing device and the projector's remote at the same time.*

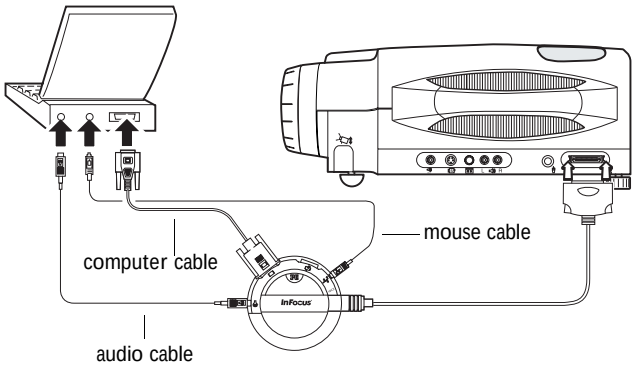


**FIGURE 11**

*Connecting the CableWizard audio and mouse cables to an IBM-compatible laptop computer*

Now you're ready to power up the projector and your laptop. Skip to "Powering up the Projector and Adjusting the Image" on page 21.

## Connecting an IBM-Compatible Desktop Computer

1. Locate the cable that connects your monitor to your computer. Unplug it from the computer.

2. Plug the end of the CableWizard computer cable into the monitor connector on your computer.

3. Plug the end of the computer cable into the connector on the CableWizard.

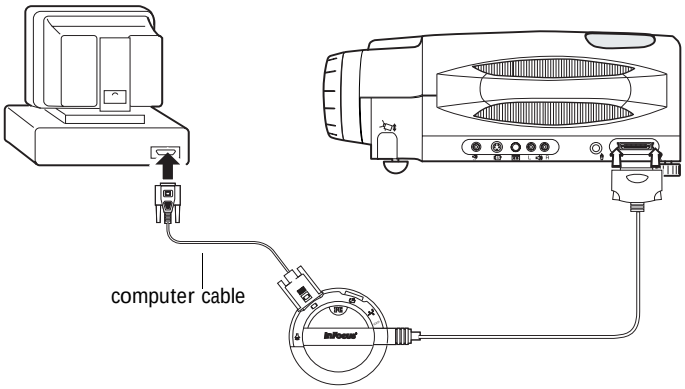


**FIGURE 12**

*Connecting the CableWizard computer cable to an IBM-compatible desktop computer*

**Do you want to display the image on your computer's monitor as well as on the projection screen?**

1. Plug your monitor's cable into the connector on the CableWizard.

**Do you want to play your computer's audio on the projector?**

1. Unplug the audio cable, if present, from your computer.

2. Plug either end of the CableWizard audio cable into the audio connector on your computer.

3. Plug the other end of the audio cable into the connector on the CableWizard.

**Do you want to control your computer's mouse from the projector's remote or keypad?**

*NOTE: You cannot use your computer's mouse and the projector's remote at the same time.*

1. Unplug the mouse cable from your computer.
2. Plug the end of the CableWizard mouse cable into the mouse connector on your computer.
3. Plug the end of the CableWizard mouse cable into the connector on the CableWizard.

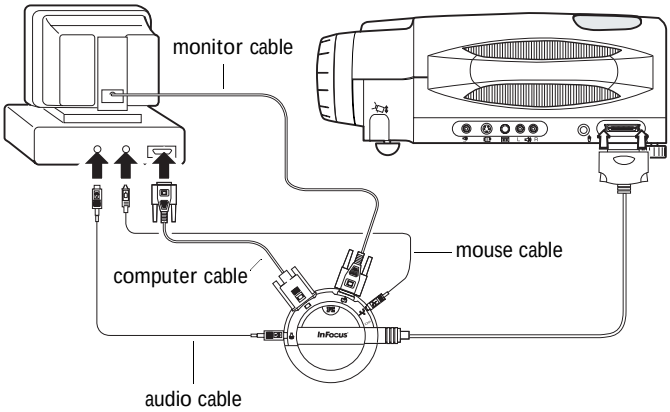


**FIGURE 13**

*Connecting the CableWizard monitor, audio and mouse cables to an IBM-compatible desktop computer*

Now you're ready to power up the projector and your computer. Skip to "Powering up the Projector and Adjusting the Image" on page 21.

## Connecting an Apple PowerBook Computer

1. Plug the end of the CableWizard computer cable into the video connector on your PowerBook.
2. Plug the end of the CableWizard computer cable into the connector on the CableWizard.
3. If you want the projector display to be the same as the PowerBook's screen display, turn on video mirroring. (See "Using Video Mirroring with a PowerBook Computer" on page 59 for additional information.)

***NOTE:*** *Some PowerBooks require the Apple-supplied video-out cable for external video. Connect it between the PowerBook and the CableWizard computer cable as shown in Figure 14.*

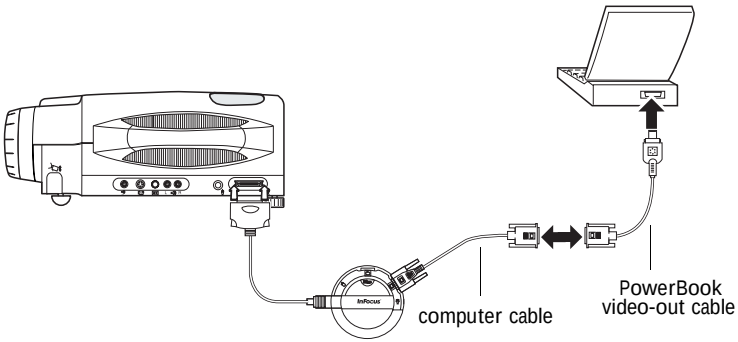


**FIGURE 14**

*Connecting the CableWizard computer cable to an Apple PowerBook*

### Do you want to play your computer's audio on the projector?

1. Plug either end of the CableWizard audio cable into the audio connector on your PowerBook.
2. Plug the other end of the audio cable into the connector on the CableWizard.

**Do you want to control the computer's mouse from the projector's remote or keypad?**

1 Locate the mouse cable and unplug it from your PowerBook.

2 Plug the end of the CableWizard mouse cable into the (ADB) connector on your PowerBook.

3 Plug the end of the CableWizard mouse cable into the connector on the CableWizard.

***NOTE**: Most laptop computers do not allow you to use the computer's pointing device and the projector's remote at the same time.*

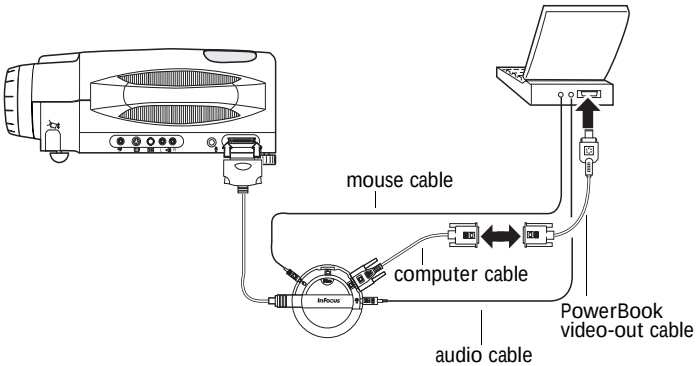


**FIGURE 15**

*Connecting the CableWizard audio and mouse cables to a PowerBook*

Now you're ready to power up the projector and your PowerBook. Skip to "Powering up the Projector and Adjusting the Image" on page 21.

## Connecting a Macintosh Desktop Computer

1. Locate the cable that connects the monitor to your computer. Unplug it from the computer.
2. Plug the end of the CableWizard computer cable into the monitor connector on your computer.
3. Plug the end of the CableWizard computer cable into the connector on the CableWizard.

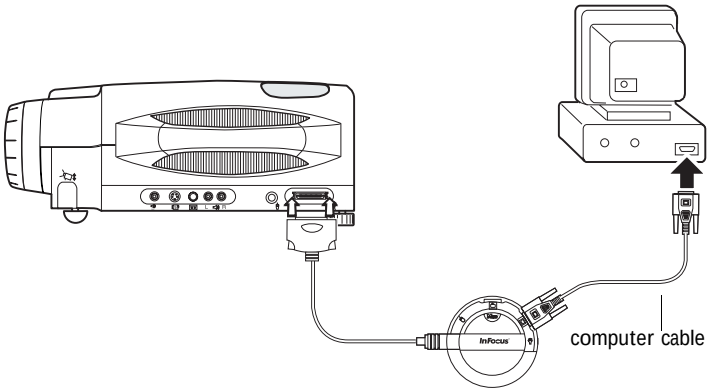


**FIGURE 16**

*Connecting the CableWizard computer cable to a Macintosh desktop computer*

**Do you want to display the image on your computer's monitor as well as on the projection screen?**

1. Plug the monitor's cable into the connector on the CableWizard.

**Do you want to play your computer's audio on the projector?**

1. Unplug the audio cable, if present, from your computer.
2. Plug either end of the CableWizard audio cable into the audio connector on your Macintosh.
3. Plug the other end of the audio cable into the connector on the CableWizard.

**Do you want to control the computer's mouse from the projector's remote or keypad?**

1 Unplug the mouse from your Macintosh or locate an unused ADB connector.

2 Plug the end of the CableWizard mouse cable into the mouse connector or the (ADB) connector on your Macintosh.

3 Plug the end of the CableWizard mouse cable into the connector on the CableWizard.

***NOTE**: You cannot use your computer's mouse and the projector's remote at the same time.*

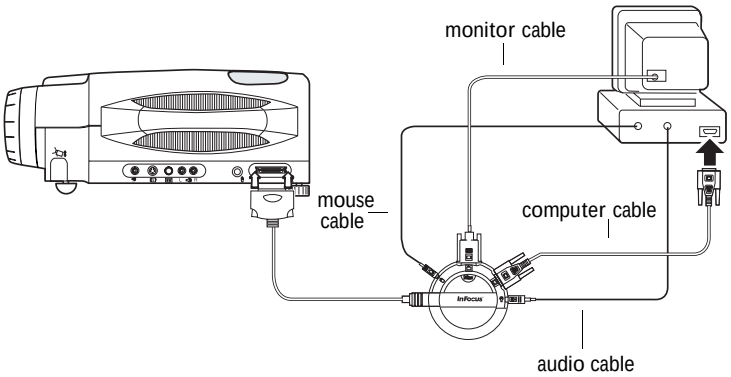


**FIGURE 17**

*Connecting the CableWizard monitor, audio and mouse cables to a Macintosh desktop computer*

Now you're ready to power up the projector and the Macintosh. Skip to "Powering up the Projector and Adjusting the Image" on page 21.

## Connecting a Video Player

**1** If your video player uses a round, one-prong composite video connector, you'll need only the A/V cable that shipped with the projector.

- If your video player uses a round, four-prong S-video connector, you'll need an S-video cable in addition to the A/V cable. The S-video cable is sold separately. (See "Accessories" on page 53.)

**2** Plug the A/V cable's yellow connector into the "video-out" port on your video player (Figure 18). This port may be labeled "To Monitor."

- If you're using an S-video cable, connect it to the "s-video out" connector on the video player (Figure 19).

**3** Plug the other yellow connector into the composite connector on the back of the projector.

- If you're using S-video, plug the other end of the cable into the "s-video" connector on the projector (Figure 19).

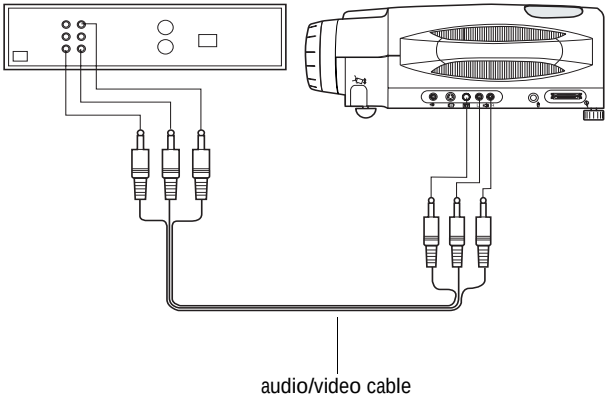


**FIGURE 18**

*Connecting the projector to a video player using the standard A/V cable (with composite video connector)*

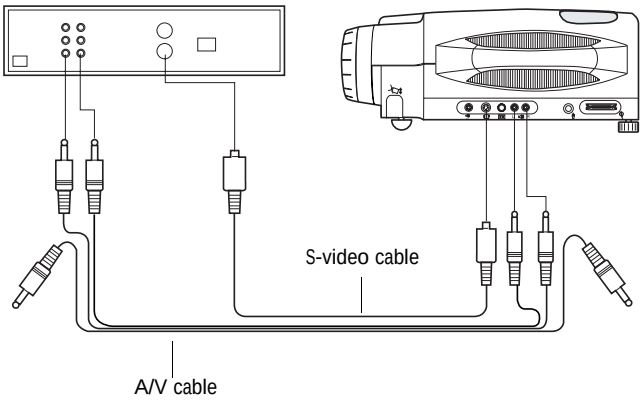


**FIGURE 19**

*Connecting the projector to a video player using an S-video cable and the audio connectors on the standard A/V cable*

**4** Plug the A/V cable's white connector into the left "audio out" port on your video player. Plug the cable's red connector into the right "audio out" port on the video player (Figure 18 and Figure 19).

- If you're using an S-video cable, the yellow connectors on the A/V cable remain unused (Figure 19).

**5** Plug the A/V cable's other white and red connectors to the left and right "audio in" ports on the projector.

***CAUTION:*** *Your video player may also have a "Video Out" port for a coaxial cable connection. DO NOT use this to connect to the projector.*

The projector is compatible with the these major broadcast video standards: NTSC, NTSC 4.43, PAL and SECAM. It automatically adjusts to optimize its performance for the incoming video. You can also set the video standard manually from the projector's Controls menu; see "Video Standard" on page 37.

## Connecting an External Speaker

To connect one or two external speakers, plug the speaker cable into the 🔊 (audio out) connector on the projector.

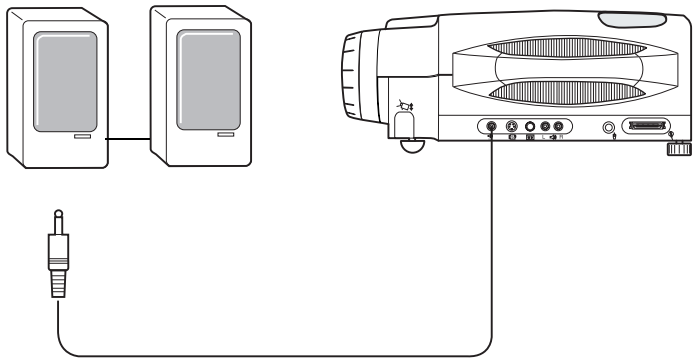

**FIGURE 20**

*Connecting an external speaker*

***NOTE**: The external speakers must be amplified.*

## Powering up the Projector and Adjusting the Image

1. Remove the lens cap.
2. Plug the power cord into the front of the projector, then plug it into your electrical outlet. A surge-protected power strip is recommended if power surges are common in your area.
3. Turn on the projector.
   - The In Focus startup screen displays and the Power LED lights (Figure 25 on page 27).
4. If you connected a video player, turn it on.
   - Press the **video** button on the keypad to display the image from your video player. Press **computer** to return to your computer's image. (You can select a default source to determine which source the projector examines first during power-up for active video; see "Default Source" on page 32.)
   - Use the **volume** buttons to adjust the volume.

***NOTE**: Always use the power cord that shipped with the projector.*

***CAUTION:** If the lamp LED remains solidly lit after the LitePro has powered on, the lamp needs to be replaced. Refer to "Replacing the Projection Lamp" on page 41 for more information.*

- If you don't want to hear the sound from your video player, press the **mute** button.

5 If you connected any external speakers, turn them on.

6 If you connected your monitor, turn it on.

7 Turn on your computer.

- The computer image should display on the projection screen. (If a video source is active, press the **computer** button to display your computer's image.)
- If necessary, use the **brightness** buttons on the keypad to adjust the brightness. You can make further adjustments to the image from the projector's on-screen menus. To open the menus, press the **menu** button on the keypad. Then select the Display menu or the Image menu. For more information about the menus, see page 29.
- If you don't want to hear the sound from your computer or video player, press the **mute** button.

***NOTE**: With some computers, the order in which you power up the equipment is very important. We recommend that you always turn on the computer LAST. Turn on all other pieces of equipment (including the computer's monitor) before you turn on the computer.*

### Turning Off the Projector

If you want to turn off the projector for a short period of time, press the **standby** button on the keypad. This blanks the screen for five minutes, but keeps the projector running. After 15 minutes, the lamp goes out (the projector keeps running). To exit standby mode, press the **standby** button again. (It takes several seconds for the projection lamp to reach full power and project the image again.)

***CAUTION:** When you disconnect the projector after you have switched it off, always remove the power cord from the electrical outlet first, then remove it from the projector.*

To completely power off the projector, press the "O" side of the power switch on the front of the projector. If you want to turn the projector back on immediately, you must allow about 30 seconds for the lamp to cool. The lamp won't light if it's too hot.

## USING THE PROJECTOR

This section describes how to use and make adjustments to the projector. It also provides a reference to the keypad buttons and the options available from the on-screen menus.

### Basic Image Adjustment

1. Make sure you have powered up your equipment in the right order (page 21).
2. If the image doesn't display completely, adjust the height and tilt of the projector (page 25), zoom the image (page 25), or center the image by adjusting its horizontal or vertical position (page 36).
3. If the image is out of focus, rotate the lens to focus it (page 25).
4. If the image appears to shimmer or if it has blurry vertical bars after you have adjusted the focus, turn Auto Image (page 35) off and then back on to reset the automatic sync and tracking. If that doesn't clear up the image, adjust the sync (page 36) and / or the tracking (page 36) manually.
5. If the colors don't look right, adjust the brightness (page 27) and tint (page 31).

***NOTE**: In Focus has created a software program called In Focus Presents that automatically optimizes your computer's display when used with any In Focus projector. This free program is included with every projector and available for download from our website at www.infocus.com.*

### Using the Remote Control

Point the remote control at the projection screen or at the front or rear of the projector. The range for optimum operation is about 40 feet. If you point the remote at the projection screen, the distance to the screen and back to the projector must be less than or equal to 40 feet. For best results, point the remote directly at the front or the rear of the projector.

The projector ships with a two-button remote. (A full-feature Smart Remote with all the same buttons as the keypad is available separately; see "Accessories" on page 54.) The remote has a disk mouse and two mouse buttons, one on the top of the remote and one on the bottom.

***NOTE:** If you can't aim the remote control at the projector so that its signal is received — for example, when using rear projection — purchase the optional Smart Remote and connect it directly to the projector with the optional remote control cable.*

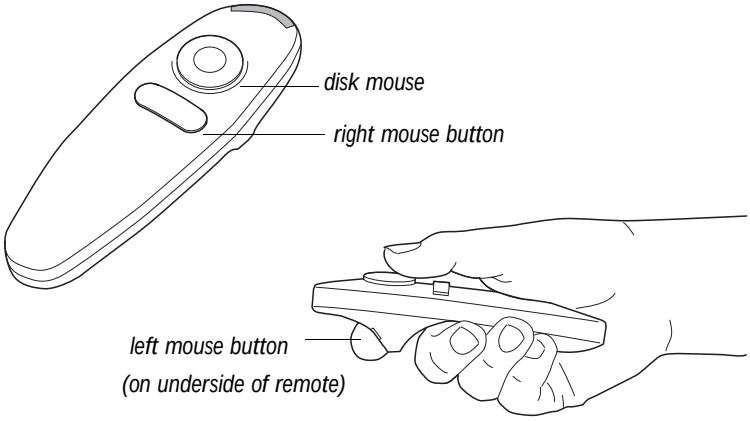


**FIGURE 21**

*Remote control*

Press anywhere on the edge of the disk mouse to move the cursor on the screen. You can move the cursor at any angle by pressing the corresponding edge of the disk. The mouse button on the top of the remote simulates your computer's right mouse button; the button on the bottom simulates your computer's left mouse button.

If you are creating presentations in Microsoft® PowerPoint®, you can use the remote's mouse buttons to navigate through your presentation while in Slide Show mode. To configure PowerPoint for this, choose Options from the Tools menu, click the View Tab, de-select the "Popup Menu on Right Mouse Click" option in the Slide Show section, then click OK. Then, when you're in PowerPoint's Slide Show mode, a left click advances to the next slide and a right click returns to the previous slide (other PowerPoint modes are not affected).

***NOTE:*** *To control the computer's mouse from the projector's remote or keypad, you must connect the mouse cable to the CableWizard.* *See page 10 for details.*

## Adjusting the Projector

To focus the image, rotate the focus ring (Figure 22) until the image is clear. To zoom the image, rotate the zoom ring. This adjusts the image size without affecting focus.

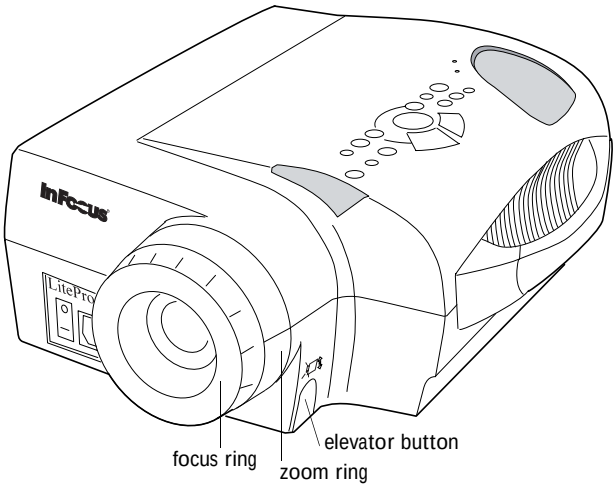


**FIGURE 22**

*Focus ring, zoom ring, and elevator button*

The projector is equipped with a self-locking, quick-release elevator foot and button (Figure 24) and a leveling knob (Figure 23).

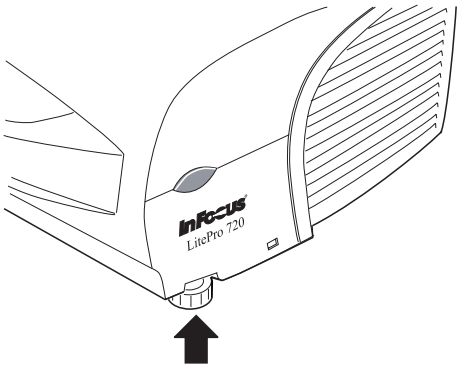


**FIGURE 23**

*Leveling knob*

To raise the projector:

1. Press and hold the elevator button (Figure 22).
2. Raise the projector to the height you want, then release the button to lock the elevator foot into position.
3. If necessary, use the leveling knob (Figure 23) to adjust the angle of the projected image.

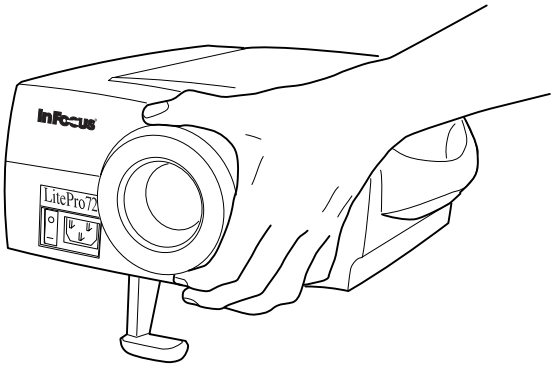


**FIGURE 24**

*Adjusting the height of the projector*

To lower the projector:

1. Press the elevator button.
2. Lower the projector.
3. If necessary, use the leveling knob (Figure 23) to readjust the angle of the projected image.

## Using the Keypad Buttons

This section provides an alphabetical reference to the keypad buttons.

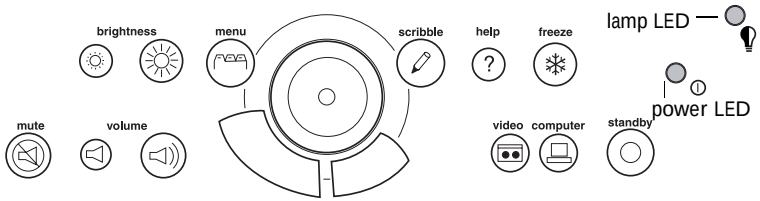


**FIGURE 25**

*Keypad*

**Brightness**

Adjusting the brightness lightens or darkens the image.

- To darken the image, press
- To lighten the image, press

**Computer**

When you have more than one source (computer or LiteShow Pro and video) connected to the projector, select between them by pressing the button for the source you want.

Press **computer** to display your computer image or LiteShow Pro presentation.

**Freeze**

The **freeze** button halts, or "freezes" the projected image. Use this button to freeze a frame of video (the video continues to run but the projected image is frozen). You can also freeze an image from a computer source on the screen, allowing you to perform other operations on the computer without the audience seeing them. Press **freeze** again when you want the image to return to normal.

**Help**

Press **help** to display the online help information.

***NOTE:*** *LiteShow Pro is an optional presentation player. Contact your In Focus dealer for more information.*

**Menu**

Press **menu** to open the on-screen menus. Press **menu** again to close the menus. When you close the menus, the projector saves any changes you made. For more information about the on-screen menus, see page 29.

**Mute**

Pressing the **mute** button silences the internal speaker. It also silences any external speakers that are connected.

To return the volume to its previous setting, press **mute** again or press either **volume** button.

**Scribble**

The **scribble** button activates on-screen annotation.

1. Press the **scribble** button. The cursor changes to a pencil.
2. Press the right disk mouse button (Figure 26 on page 30) to display the color selector. Use the disk mouse to position the cursor on the desired color, then press the left mouse button. Press the right button again to close the color selector.
3. Use the disk mouse to move the pencil to where you want to start the annotation.
4. Press the left mouse button. The cursor changes to an upright pencil.
5. Use the disk mouse to draw your annotation. Press the left mouse button to complete the annotation.
6. To exit Scribble, press the **scribble** button. The annotation is automatically deleted (it cannot be saved).

### Standby

When you press **standby**, the display and audio turn off and a blank screen is displayed for 15 minutes. After 15 minutes, the lamp goes out if you haven't pressed any other buttons.

- If you press any button again within 15 minutes, the projector returns to normal operations immediately.
- If you press **standby** again after 15 minutes, there is about a 30 second delay before the lamp turns back on.

### Video

When you have more than one source (computer or LiteShow Pro and video) connected to the projector, select between them by pressing the button for the source you want.

Press **video** to display the image from your video player.

### Volume

- To increase the volume, press
- To decrease the volume, press

Volume adjustments are saved for each source you have connected.

## Using the On-Screen Menus

The projector has four on-screen menus that allow you to make image adjustments and change a variety of settings. Most of these adjustments aren't available directly from the keypad.

To open the on-screen menus, press the **menu** button on the keypad. Press **menu** again when you want to close the menus and save any changes.

To select a menu, use the disk mouse on the keypad or remote to move the cursor to the tab for the menu you want, then click either mouse button.

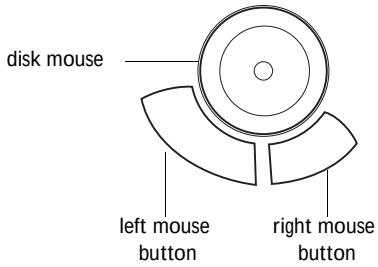


**FIGURE 26**

*Disk mouse and mouse buttons on keypad*

To change a menu setting, move the cursor to the setting you want to change, then use one of the two mouse buttons to make changes. All changes are saved when you close the menus.

The status bar at the top of the menu display indicates the source that is currently active (Computer or Video) and any peripherals that are connected.

The status bar also contains a lamp hour counter that starts at zero hours and counts each hour the lamp is in use. When the counter reaches 2000 hours, the lamp monitor light turns on, when it reaches 2050 hours, the lamp switches off completely. See “Replacing the Projection Lamp” on page 41 for details.

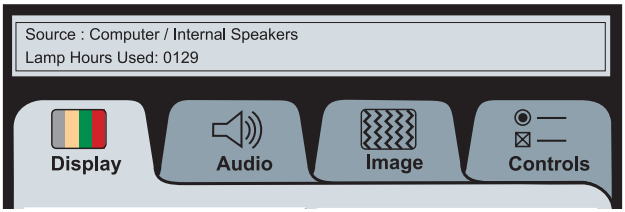


**FIGURE 27**

*On-screen menu status bar*

## Display Menu Functions

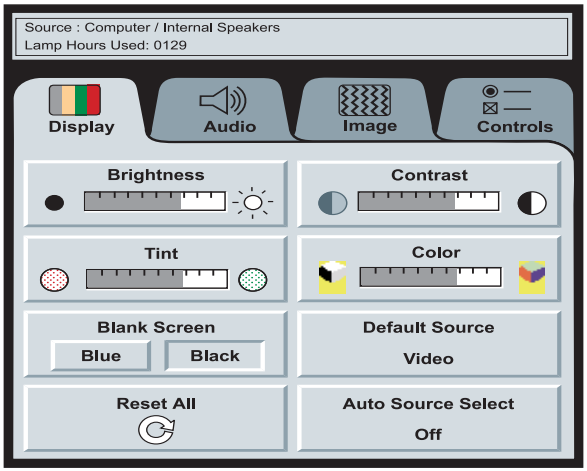


**FIGURE 28**

*Display menu*

### Brightness

Adjusting the brightness changes the intensity of the image.

- Press the left mouse button to darken the image.
- Press the right mouse button to lighten the image.

### Contrast

The contrast controls the degree of difference between the lightest and darkest parts of the picture. Adjusting the contrast changes the amount of black and white in the image.

- Press the left mouse button to decrease the contrast.
- Press the right mouse button to increase the contrast, making the blacks appear blacker and the whites appear whiter.

### Tint

The **Tint** setting adjusts the red-green color balance in the projected image. Changing the Tint setting has no effect on PAL or SECAM video sources.

- Press the left mouse button to increase the amount of green in the image.
- Press the right mouse button to increase the amount of red in the image.

***NOTE:*** *Changing the brightness using the menu is the same as changing it using the keypad.*

### Color

The **Color** setting adjusts a video image from black and white to fully saturated color.

- Press the left mouse button to decrease the amount of color in the image.
- Press the right mouse button to increase the amount of color in the image.

### Blank Screen

Blank Screen determines what color is displayed when there is no active source.

- Click the “Black” button to display a black blank screen; click the “Blue” button to display a blank blue screen.

### Default Source

Default Source toggles between Computer and Video. This determines which source the projector checks first during power-up for active video. Click the button to toggle between the options.

### Auto Source Select

This setting toggles between On and Off. When this feature is Off, the projector defaults to the source selected in Default Source. To display another source, you must manually select one by pressing the **computer** or **video** button on the keypad. When this feature is On, the projector automatically finds the active source, checking the default source first. Click the button to toggle between the options.

### Reset All

Click either mouse button to reset all the options (except Language and Video Standard) in all the menus to their original settings. This also returns Freeze and Mute to their default (off) settings.

## Audio Menu Functions

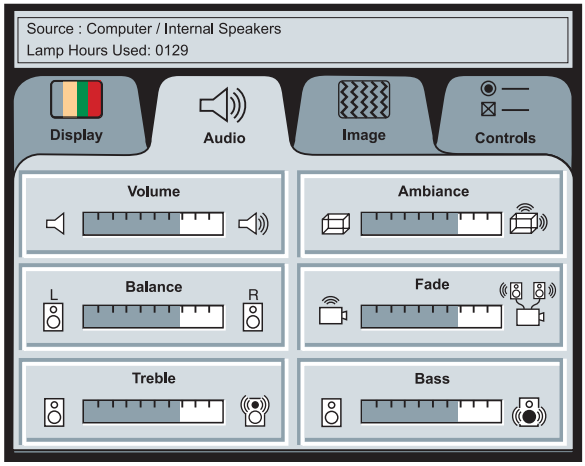


**FIGURE 29**

*Audio menu*

### Volume

- Press the left mouse button to decrease the volume.
- Press the right mouse button to increase the volume.

Volume adjustments you make are saved for each source.

### Ambiance

This feature is not available on this product.

### Balance

The **Balance** setting controls the balance between the left and right external speakers. It appears gray and won't highlight if you haven't connected external speakers. The **Balance** setting applies to all sources you have connected.

- Press the left mouse button to increase the amount of sound coming from the left external speaker.
- Press the right mouse button to increase the amount of sound coming from the right external speaker.

***NOTE:*** *Changing the volume from the menu is the same as changing it using the keypad.*

### Fade

The **Fade** setting controls the balance between the internal and external speakers. The setting appears gray and won't highlight if external speakers aren't connected.

- Press the left mouse button to increase the amount of sound coming from the internal speaker.
- Press the right mouse button to increase the amount of sound coming from the external speakers.

### Treble

The **Treble** setting controls the higher frequencies of your audio source.

- Press the left mouse button to decrease the treble.
- Press the right mouse button to increase the treble.

### Bass

The **Bass** setting controls the lower frequencies of your audio source.

- Press the left mouse button to decrease the bass.
- Press the right mouse button to increase the bass.

***NOTE:*** *The **Treble** and **Bass** settings apply only to the projector's internal speaker. External speakers typically have their own tone controls.*

## Image Menu Functions

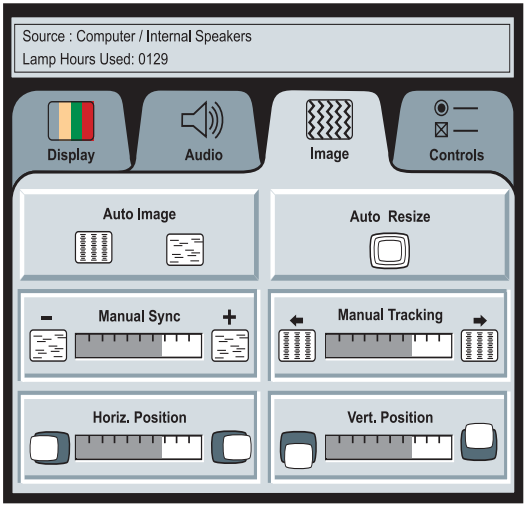


**FIGURE 30**

*Image menu*

### Auto Image

The projector automatically adjusts tracking, signal synchronization and vertical and horizontal position for most computers. If you want to adjust these features manually, you must turn off **Auto Image** first by clicking it.

### Auto Resize

The **Auto Resize** setting is available only for computer-generated images. **Auto Resize** automatically resizes the image by scaling it up or down.

When **Auto Resize** is on, the projector makes the best fit of the image to the screen. If you turn **Auto Resize** off (by clicking it), the image may be either cropped or too small for the screen.

***NOTE:*** *Some screen savers interfere with the operation of Auto Image. If you're experiencing problems, try turning your screen saver off, then turning Auto Image off and back on.*

**Manual Sync**

The projector adjusts signal synchronization automatically for most computers. But if the projected computer image looks fuzzy or streaked, try turning **Auto Image** off then back on again. If the image still looks bad, try adjusting the signal synchronization manually as described below.

1. Click the **Auto Image** button to turn Auto Image off.
2. Press the left or right mouse buttons repeatedly until the image is sharp and free of streaks.

***NOTE:*** *The* ***Manual Sync****,* ***Manual Tracking****,* ***Horiz. Position*** *and* ***Vert. Position*** *buttons are available only for computer sources. The projector sets these options automatically for a video source.*

**Manual Tracking**

The tracking function adjusts the projector to match the video signal from your computer. The projector usually adjusts the tracking automatically when you connect your computer. However, if the display shows evenly spaced, fuzzy, vertical lines or if the projected image is too wide or too narrow for the screen, try turning **Auto Image** off then back on again. If the image is still bad, try adjusting the tracking manually as described below.

1. Click the **Auto Image** button to turn Auto Image off.
2. Press the left or right mouse buttons repeatedly until the fuzzy vertical bars are gone.

**Horiz. Position**

Follow these steps to manually adjust the horizontal position.

1. Click the **Auto Image** button to turn Auto Image off.
2. Press the left mouse button to move the image right; press the right mouse button to move the image left.

Positioning adjustments are saved when you power off the projector.

**Vert. Position**

Follow these steps to manually adjust the vertical position.

1. Click the **Auto Image** button to turn Auto Image off.
2. Press the left mouse button to move the image down; press the right mouse button to move the image up.

Positioning adjustments are saved when you power off the projector.

## Controls Menu Functions

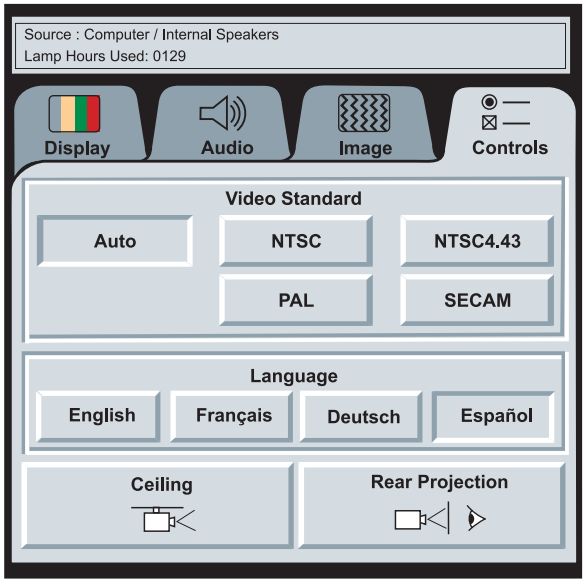


**FIGURE 31**

*Controls menu*

### Video Standard

When **Auto** is on, the projector attempts to pick the video standard (NTSC, NTSC 4.43, PAL or SECAM) automatically based on the input signal it receives. (The video standard options may vary depending on your region of the world.) If the projector is unable to detect the standard, the colors might not look right or the image might appear "torn." If this happens, manually select a video standard.

***NOTE:*** *If you already know the video standard used in your geographical area, it's often best to manually select it.*

### Language

You can display the on-screen menus in English, French, German, and Spanish. The default is English.

- Click the button for the language you want. The menus redraw immediately.

*NOTE: To order the LitePro 700 Series Ceiling Mount, refer to* *"Accessories" on page 53.*

**Ceiling**

- Click either mouse button to turn the image upside down for ceiling-mounted projection.

**Rear Projection**

When you select **Rear Projection**, the projector reverses the image so you can project from behind a translucent screen.

## MAINTENANCE

This section describes how to:

- clean the lens
- clean the fan intake filter
- replace the projection lamp
- replace the batteries in the remote control
- use the Kensington lock feature

### Cleaning the Lens

Follow these steps to clean the projection lens:

1. Apply a non-abrasive camera lens cleaner to a soft, dry cloth.
   - Avoid using an excessive amount of cleaner.
   - Abrasive cleaners, solvents or other harsh chemicals might scratch the lens.
2. Lightly wipe the cleaning cloth over the lens.
3. If you don't intend to use the projector immediately, replace the lens cap.

### Cleaning the Fan Intake Filter

The fan intake filter on the bottom of the projector catches dust and particles in the air. If the filter becomes clogged, the projector does not cool properly and may malfunction. To prevent this, clean the filter after every 100 hours of use.

1. Turn off the power and unplug the power cord.
2. Remove the filter door.
   - Carefully place a screwdriver against the indented part of the filter door and lift out.

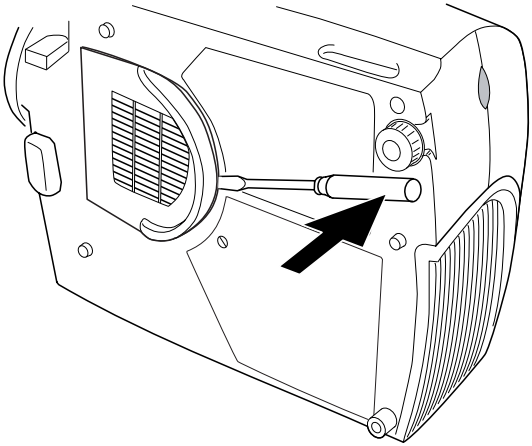

**FIGURE 32**

*Removing the filter door*

**3** Clean the filter.

- Use a vacuum cleaner set on low power to remove the dust and dirt.

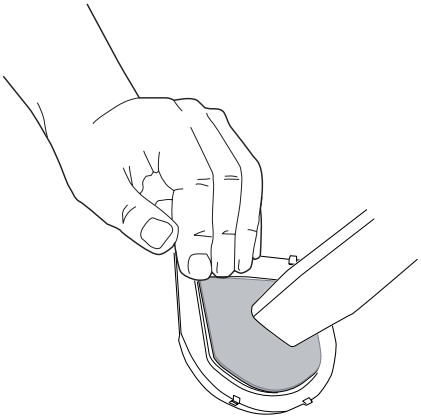

**FIGURE 33**

*Cleaning the air filter*

**4** Replace the filter.

- First, insert the side with the tabs, then press the other end in place.

## Replacing the Projection Lamp

The lamp hour counter on the status bar at the top of the menus counts the number of hours the lamp has been in use. After 2000 hours of use, the lamp monitor LED, marked on the top of the projector near the keypad, lights. After 2050 hours, the lamp switches off completely and must be replaced. You can order new lamp modules from your In Focus dealer. See “Accessories” on page 53 for information.

Follow these steps to replace the projection lamp:

1. Turn off the projector and unplug the power cord.
2. Wait 2 minutes to allow it to cool thoroughly.
3. Using a small, flat-blade screwdriver, remove the screw on the outside of the lamp door (Figure 34).
4. Pull the lamp cover up and remove it.

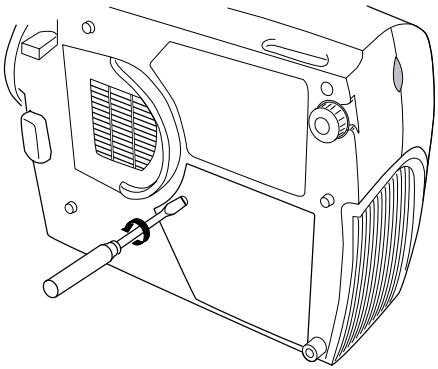

**FIGURE 34**

*Removing the lamp module door*

5. Loosen the two non-removable screws on the outside of the module.
6. Remove the module (Figure 35).

***WARNING:*** *To avoid burns, allow the projector to cool for at least 2 minutes before you open the lamp module door. Never extract the lamp module while the lamp is operating.*

***CAUTION:*** *Never operate the projector with the lamp cover open or removed. This disrupts the air flow and causes the projector to overheat.*

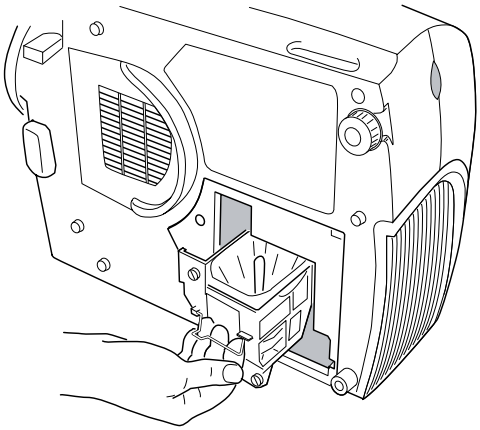

**FIGURE 35**

*Removing the lamp module*

***WARNING:*** *Do not drop the lamp module or touch the glass bulb! The glass may shatter and cause injury.*

**7** Align the new lamp module in the correct direction.

**8** Gently push the module in as far as it goes (Figure 36).

**9** Tighten the screws on the outside of the module.

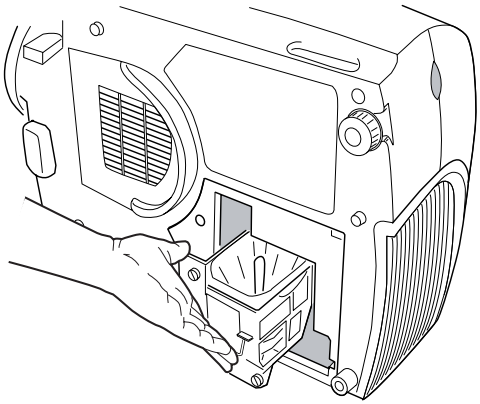

**FIGURE 36**

*Installing a new lamp module*

**10** Reposition the lamp cover.

11 Replace the screw and tighten it.

12 Plug in the power cord and turn the projector back on. The lamp monitor light and lamp hour counter in the Status bar on the menus are automatically reset.

### Replacing the Batteries in the Remote Control

The life of the batteries depends on how often and how long you use the remote. Symptoms of low battery charge include erratic responses when using the remote and a reduced range of operation.

Follow these steps to replace the batteries:

1 Turn the remote face down in your hand.

2 Slide the battery cover off the end of the remote by pressing on it with the heel of your hand.

3 Remove the old batteries.

4 Install two new AAA alkaline batteries. Make sure you install each in the correct direction.

5 Slide the battery cover back on the remote.

### Using the Kensington Lock

The projector has a Kensington Security Standard connector for use with a Kensington MicroSaver Security System (Figure 37). Refer to the information that came with the Kensington System for instructions on how to use it to secure the projector.

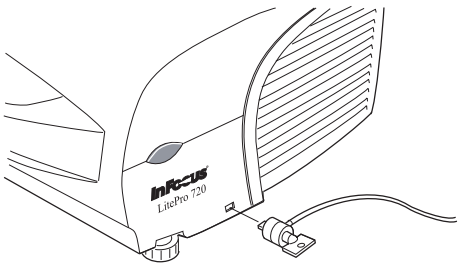


**FIGURE 37**

*Installing the Kensington lock*

## TROUBLESHOOTING

If you're experiencing trouble with the projector, follow these steps to make sure everything is properly connected before you call Technical Support for assistance.

1. Check cable connections. Verify that all computer, CableWizard and power cables are properly connected.
2. Verify that all power is switched on.
3. Verify that the projector has not been switched off with the **standby** button on the keypad.
4. If the projector still doesn't display an image, restart the computer.
5. If the problem still exists, unplug the projector from the computer and check the computer monitor's display. The maximum resolution that the 720 can display is 1024x768 pixels, preferably 800x600; the maximum resolution that the 730 can display is 1280x1024 pixels, preferably 1024x768. The problem might be with the graphics controller in your computer rather than with the projector. When you reconnect the projector, remember to turn the computer and monitor off before you power up the projector. Power the equipment back up in this order: projector, monitor, computer.
6. If you're using a laptop computer and its monitor is not displaying your presentation, make sure you have re-activated the computer's monitor. Most laptop computers de-activate their own monitor when a second display device, such as the projector, is connected. Refer to page 55 for more information.
7. If the problem still exists, read through the problems and solutions in this chapter.

If you call Technical Support for assistance:

- Find out what kind of graphics controller card is installed in your computer. This is the circuit board in the computer to which the projector is connected.

***NOTE:*** *Macintosh computers require a specific power-up sequence: the projector must be turned on before you turn on the computer.*

## Solutions to Common Problems

### Problem: Nothing on projection screen

- Make sure that the power cord is properly connected to a functional AC electrical outlet. Make sure that the power cord is also properly connected to the projector.
- If the projector is plugged into a power strip, make sure the power strip is turned on.
- Make sure you have removed the lens cap on the projection lens at the front of the projector.
- Make sure the projector is switched on.
- Check the projector's lamp to ensure that it is securely connected in the lamp module. See "Replacing the Projection Lamp" on page 41.
- Make sure that the CableWizard and the cables do not have any bent pins. Check the power cord for bent pins also.

### Problem: Color or text not being projected

- You might need to adjust the brightness up or down until the text is visible. Refer to "Brightness" on page 27 for more information.
- Verify that the appropriate input source is selected. See "Computer" on page 27 or "Video" on page 29.

### Problem: The screen resolution is not right

- Make sure the computer's graphics card is set for a resolution of no greater than 1024x768 for the 720, 1280x1024 for the 730.

### Problem: Image isn't centered on the screen

- Reposition the image. Refer to "Horiz. Position" on page 36 and "Vert. Position" on page 36.
- If you're using an extension cable between the CableWizard and the projector, make sure it's In Focus-approved.

### Problem: Only the start-up screen displays

- Verify that the cables are connected correctly. Check to see that the CableWizard computer cable is correctly connected to the

monitor connector on the computer (this is the connector where your monitor cable usually goes.) See page 8 through page 17 for connection procedures.

- Verify that the proper input source is connected. See “Computer” on page 27 or “Video” on page 29.
- You might need to turn everything off and power up the equipment again. Make sure you power up in this order: projector, computer monitor, computer. It is especially important that you follow this sequence for Macintosh computers.
- Make sure your computer’s graphics board is installed and configured correctly.

  If you’re using Windows 3.x:

  1. In the Windows Program Manager, double-click the Windows Setup icon in the Main program group.
  2. Verify that the Display setting is 1024x768 or less for the 720, 1280x1024 or less for the 730.

  If you’re using Windows 95:

  1. Open “My Computer” icon, the Control Panel folder and then the Display icon.
  2. Click the Settings tab.
  3. Verify that the Desktop area is set to 1024x768 or less for the 720, 1280x1024 or less for the 730.

Also check the following:

- Does your computer have a compatible graphics board? The projector isn’t CGA or EGA compatible.
- Is your computer’s graphics board turned on? This is especially true for laptop computers. See “Portable and Laptop Activation Chart” on page 55.

**Problem: Image is too wide or narrow for screen**

- You might need to manually adjust the tracking to reduce or enlarge the projected image. Refer to “Manual Tracking” on page 36.

- Adjust the resolution of your monitor if it's greater than 1024x768 pixels for the 720 or 1280x1024 for the 730. Only these resolutions at 75 Hz or less will display on the projector.

**Problem: Image is out of focus**

- Turn the projection lens to focus the image.
- Make sure the projection screen is at least 4 feet (1.2m) from the projector.
- Check the projection lens to see if it needs cleaning.

**Problem: Image and menus are reversed left to right**

- Rear projection mode is probably turned on. Switch back to forward projection from the Controls menu. The image should immediately return to forward projection. See "Rear Projection" on page 38.

**Problem: Image and menus are upside down**

- Ceiling mode is probably turned on. Turn off the mode from the Controls menu. The image should immediately return to forward projection. See "Ceiling" on page 38.

**Problem: the projector displays vertical lines, "bleeding" or spots**

- Adjust the brightness. See "Brightness" on page 27.
- Check the projection lens to see if it needs cleaning.

**Problem: no sound**

- Press the mute button.
- Adjust volume.
- Verify audio/input connections.
- Adjust audio source.

**Problem: Image is "noisy" or streaked**

Try these steps in this order.

1. Deactivate the screen saver on your computer.
2. Turn **Auto Image** off and then back on again. See "Auto Image" on page 35.
3. Adjust the synchronization and tracking manually to find an optimal setting. See "Manual Sync" on page 36 and "Manual Tracking" on page 36.

- If you're using an extension cable between the CableWizard and the projector, make sure it's In Focus-approved.
- The problem could be with your computer's graphics board. If possible, connect a different computer.

**Problem: Projected colors don't match the computer or video player's colors**

- Adjust the brightness, tint and/or contrast from the Display menu. Just as there are differences in the displays of different monitors, there are often differences between the computer image and the projected image. See "Brightness" on page 27, "Tint" on page 31 and "Contrast" on page 31.

**Problem: Lamp seems to be getting dimmer**

- The lamp begins to lose brightness when it has been in use for a long time. Replace the lamp as described in "Replacing the Projection Lamp" on page 41.

**Problem: Lamp shuts off**

- A minor power surge may cause the lamp to shut off. Turn the projector off, wait at least 30 seconds, then turn it back on.

**Problem: Remote not operating correctly**

- You might need to replace the batteries. See "Replacing the Batteries in the Remote Control" on page 43.
- Make sure you're pointing the remote either at the back or front of the projector, or at the projection screen.
- Make sure the remote is within its operating range of 40 feet.

## APPENDIX

### Specifications

The LitePro 720 and 730 must be operated and stored within the temperature and humidity ranges specified.

| Temperature | |
|---|---|
| Operating | 10 C to 40° C |
| Non-operating | -20 to 70° C |

| Humidity | |
|---|---|
| Operating and non-oper. | 5% to 95% relative humidity, non-condensing |

| Dimensions |
|---|
| 6.0 x 15.3 x 11.7 inches (15.3 x 38.8 x 29.8 cm) |

| Weight |
|---|
| 12.2 lbs. (5.5 kg) unpacked |

| Altitude | |
|---|---|
| Operating | 0 to 10,000 feet (3048 meters) |
| Non-operating | 0 to 40,000 feet (12,192 meters) |

| Audio Output | |
|---|---|
| Frequency Response | 10 Hz - 20 KHz |
| Output Impedance | 1.2 K ohm nominal |
| Output Voltage | 2 Vrms maximum (open circuit) |
| Connector Type | red and white RCA jacks |

| Optics | |
|---|---|
| Focus Range | 3.25 - 32.5 feet (1-10 m) |

| Lamp | |
|---|---|
| Type | 150-watt metal halide |

### Remote Control

| | |
|---|---|
| Battery | Two (2) AAA alkaline cells |

### Input Power Requirements

100-120/220-240V, 5.0/3.0A, 50/60 Hz.

### Video Audio Input

| | |
|---|---|
| Input Impedance | 5K ohm DC coupled |
| Maximum Input Voltage | $(L_{IN} + R_{IN})_{PEAK} < 4.5$ V for THD $\leq$ 0.3%<br>$L_{IN}$ or $R_{IN} < 2.0$ Vrms for THD $\leq$ 0.3% |
| Sensitivity | 100 mV at 1 KHz for 88 dB SPL at 1 meter |
| Connector Type | RCA jack |

### CableWizard Audio Input

| | |
|---|---|
| Input Impedance | 10K ohm nominal, AC coupled |
| Maximum Input Voltage | $(L_{IN} + R_{IN})_{PEAK} < 4.5$ V for THD $\leq$ 0.3%<br>$L_{IN}$ or $R_{IN} < 2.0$ Vrms for THD $\leq$ 0.3% |
| Sensitivity | 100 mV at 1 KHz for 88 dB SPL at 1 meter |
| Connector Type | 3.5 mm (1/8 inch) stereo phone jack |

## Accessories

| Standard Accessories (ship with the projector) | Part Number |
|---|---|
| *LitePro 720/730 Quick Start* card | 009-0290-xx |
| *LitePro 720/730 User's Guide* | 010-0131-xx |
| Shipping Box | 110-0159-xx |
| CableWizard and Cables | SP-CW2 |
| CableWizard Audio Cable | 210-0079-xx |
| CableWizard Computer Cable | 210-0094-xx |
| CableWizard Mouse Cable | 210-0078-xx |
| Projection Lamp Module | SP-LAMP-LP7 |
| Lens Cap | 505-0241-xx |
| Audio/Video Cable | 210-0053-xx |
| Remote Control and 2 Batteries | 590-0226-xx |
| Online User's Guide CD-ROM | 010-0116-xx |

**Power Cords (one ships with projector, type depends on country)**

| | |
|---|---|
| North American Power Cord | 210-0023-xx |
| Australian Power Cord | 210-0027-xx |
| UK Power Cord | 210-0028-xx |
| European Power Cord | 210-0029-xx |
| Danish Power Cord | 210-0030-xx |
| Swiss Power Cord | 210-0031-xx |

***NOTE:*** *Use only In Focus-approved accessories. Other products have not been tested with the projector.*

**Optional Accessories**

| | |
|---|---|
| Easy Carry Case | CA-C129 |
| Soft Case | CA-C122 |
| European Hard Case | CA-C130 |
| Hard Travel Case | CA-C123 |
| Deluxe Travel Case | CA-C128 |
| ATA Shipping Case | CA-C124 |
| CableWizard Lite, 6.5 ft (2 m) | SP-CW2LITE |
| Mac Adapter for CableWizard Lite | 516-0003-xx |
| CableWizard Extension Cable, non-plenum rated, 60.7 ft (18.5 m)* | SP-CW2EXT |
| CableWizard Extension Cable, plenum-rated, 60.7 ft (18.5m)* | SP-CW2EXTP |
| Full-Feature Smart Remote Control | HW-SMART |
| Remote Cable | 210-0088-xx |
| LiteShow Pro Presentation Player | HW-LSPRO |
| LiteShow Pro Soft Case | CA-C131 |
| 32 MB Memory Upgrade | HW-MEM-LSP |
| Kensington MicroSaver Security System | SP-KENLOC |
| SGI/SUN Workstation Cables | SP-CABLE-WS |
| Rhapsody II Speakers | SP-R2SPKR |
| JBL Subwoofer | SP-JBLSUB |
| Portable Projector Stand | SP-STND |
| S-Video Cable | 515-0027-xx |
| LitePro 700 Series Ceiling Mount-LiteMount 7* | SP-CEIL-LM7 |
| LiteMount False Ceiling Plate | SP-LTMT-PLT |
| LiteMount Pipe Tubing Extension | SP-LTMT-EXT |
| 2nd Year Advantage Service Plan (1 year extension) | AS-LP7xx-12 |
| 3rd Year Advantage Service Plan (2 year extension) | AS-LP7xx-24 |

*Using the extension cable or ceiling mount with the LitePro 720 reduces FCC and EMC compliance to Class A.

## Portable and Laptop Activation Chart

| Computer | Key command to activate port | Key command to de-activate port |
|---|---|---|
| Acer | Ctrl-Alt-Esc (for setup) | Ctrl-Alt-Esc (for setup) |
| AST* ** | FN-D or Ctrl-D<br>Ctrl-FN-D<br>FN-F5<br>type from A:/IVGA/CRT<br>FN-F12 | FN-D or Ctrl-D<br>Ctrl-FN-D<br>FN-F5<br>type from A:/IVGA/CRT<br>FN-F12 |
| Advanced Logic Research | Ctrl-Alt-V | Ctrl-Alt-V |
| Altima | Shift-Ctrl-Alt-C<br>setup VGA/ Conf.Simulscan | Shift-Ctrl-Alt-L<br>setup VGA/ Conf.Simulscan |
| Ambra** | FN-F12<br>FN-F5<br>F2/Choose Option/F5 | FN-F12<br>FN-F5<br>F2/Choose Option/F5 |
| Amrel* ** | setup menu<br>Shift-Ctrl-D | setup menu<br>Shift-Ctrl-D |
| Apple | see Mac Portable and Mac PowerBook | |
| Aspen | automatic | automatic |
| BCC* | automatic | reboot computer |
| Bondwell | LCD or CRT options after bootup | reboot for LCD or CRT options to appear |
| Chaplet** | setup screen<br>FN-F6<br>FN-F4 | setup screen<br>FN-F6<br>FN-F4 |
| Commax | Ctrl-Alt-#6 | Ctrl-Alt-#5 |

***NOTE:*** *Most laptop computers de-activate their built-in monitors when a second display device is connected. The following chart lists the commands that re-activate the laptop's monitor. If your computer is not listed, refer to the computer's documentation.*

| Computer | Key command to activate port | Key command to de-activate port |
|---|---|---|
| Compaq* ** | Ctrl-Alt-< | Ctrl-Alt-> |
| | FN-F4 | FN-F4 |
| | automatic | automatic |
| | mode/? (for setup option) | mode/? (for setup option) |
| Compuadd* ** | automatic | automatic |
| | Alt-F for screen setup option | Alt-F for screen setup option |
| Data General | Ctrl-Alt-Command | Ctrl-Alt-Command |
| Data General Walkabout | 2 CRT/X at DOS prompt | reboot |
| Datavue | Ctrl-Shift-M | Ctrl-Shift-M |
| Dell** | Ctrl-Alt-< | Ctrl-Alt-> |
| | Ctrl-Alt-F10 | Ctrl-Alt-F10 |
| | FN-F8 (CRT/LCD) | FN-F8 |
| | FN-D | FN-D |
| | FN-F12 | FN-F12 |
| Digital* | automatic | reboot |
| | FN-F2 | FN-F2 |
| Dolch | dip switch to CRT | dip switch to LCD |
| Epson | dip switch to CRT | dip switch to LCD |
| Everex* | setup screen option | setup screen option |
| For-A | Ctrl-Alt-Shift-C | Ctrl-Shift-Alt-L |
| Gateway | FN-F1/FN-F1 again simultaneous | FN-F1 |
| Grid* ** | FN-F2, choose auto or simultaneous | FN-F2 |
| | Ctrl-Alt-Tab | Ctrl-Alt-Tab |
| Hyundai | setup screen option | setup screen option |
| IBM 970* | automatic | warm reboot |

| Computer | Key command to activate port | Key command to de-activate port |
|---|---|---|
| IBM ThinkPad** | reboot, enter setup menu | FN-F2 |
| | FN-F7, select choice from setup menu | |
| | FN-F1, select choice | |
| | FN-F5, select choice | |
| | PS/2 SC select choice (CRT, LCD, etc.) | |
| Kaypro | boot up, monitor plugged in | unplug monitor |
| Kris Tech | FN-F8 | FN-F8 |
| Mac Portable 100 | no video port: not compatible | |
| Mac PowerBook | | |
| 140, 145, 150, 170 | no video port: requires a 3rd-party interface | |
| 160, 165, 180, 520, 540, 5300 | Control Panel folder, PowerBook Display folder; Activate Video Mirroring | warm reboot |
| 210, 230, 250, 270, 280, 2300 | requires Apple Docking Station or Mini Dock | |
| Magitronic | FN-F4 | FN-F4 |
| Mastersport | FN-F2 | FN-F1 |
| Micro Express* | automatic | warm reboot |
| Microslate* | automatic | warm reboot |
| Mitsubishi | SW2 On-Off-Off-Off | SW2 Off-On-On-On |
| NCR | setup screen option | setup screen option |
| NEC* ** | setup screen option | setup screen option |
| | CRT at the DOS prompt | LCD at the DOS prompt |
| | FN-F31 | FN-F3 |
| Olivetti* | automatic | automatic |
| | FN-O/* | FN-O/* |
| | FN- \| \| | FN- \| \| |

| Computer | Key command to activate port | Key command to de-activate port |
|---|---|---|
| Packard Bell** | FN-F2<br>Ctrl-Alt-< | FN-F2<br>Ctrl-Alt-> |
| Panasonic | FN-F2 | FN-F2 |
| Samsung* | setup screen option | setup screen option |
| Sanyo | setup screen option | setup screen option |
| Sharp | dip switch to CRT | dip switch to LCD |
| Sun SPARC-Dataview | Ctrl-Shift-M | Ctrl-Shift-M |
| Tandy** | Ctrl-Alt-Insert<br>setup screen option | Ctrl-Alt-Insert<br>setup screen option |
| Texas Instruments* | setup screen option | setup screen option |
| Top-Link* ** | setup screen option<br>FN-F6 | setup screen option<br>FN-F6 |
| Toshiba* ** | Ctrl-Alt-End<br>FN-End<br>FN-F5<br>setup screen option | Ctrl-Alt-Home<br>FN-Home<br>FN-F5<br>setup screen option |
| Twinhead* | FN-F7<br>FN-F5<br>Automatic | FN-F7<br>FN-F5<br>Automatic |
| WinBook | Ctrl-Alt-F10 | Ctrl-Alt-F10 |
| Wyse | software driven | software driven |
| Zenith** | FN-F10<br>FN-F2<br>FN-F1 | FN-F10<br>FN-F2<br>FN-F1 |

* These manufacturers have models that automatically send video to the external CRT port when some type of display device is attached.

** These manufacturers offer more than one key command depending on the computer model.

### Using Video Mirroring with a PowerBook Computer

When you turn video mirroring on, the projector displays the same information that appears on your PowerBook's built-in screen. When video mirroring is off, the projector acts like a separate display.

To turn on video mirroring for the first time:

1. Open the Monitors control panel; click on Monitor 2.
2. Set the number of colors you want.
3. Open the Control Strip; click on the monitor icon.
4. Select "Turn Video Mirroring On."

Now you can turn video mirroring on and off from the Control Strip without having to open the Monitors control panel again.

When using video mirroring and high color graphics such as slide shows, the projected image occasionally might turn black and white. If this happens, perform the following steps:

1. Turn off video mirroring.
2. Open the Monitors control panel.
3. Move the white menu bar to Monitor 2 to set the projector as the primary monitor.
4. Restart the PowerBook.

## Projected Image Size

Use the chart below and the tables on the next page to help you determine projected image sizes.

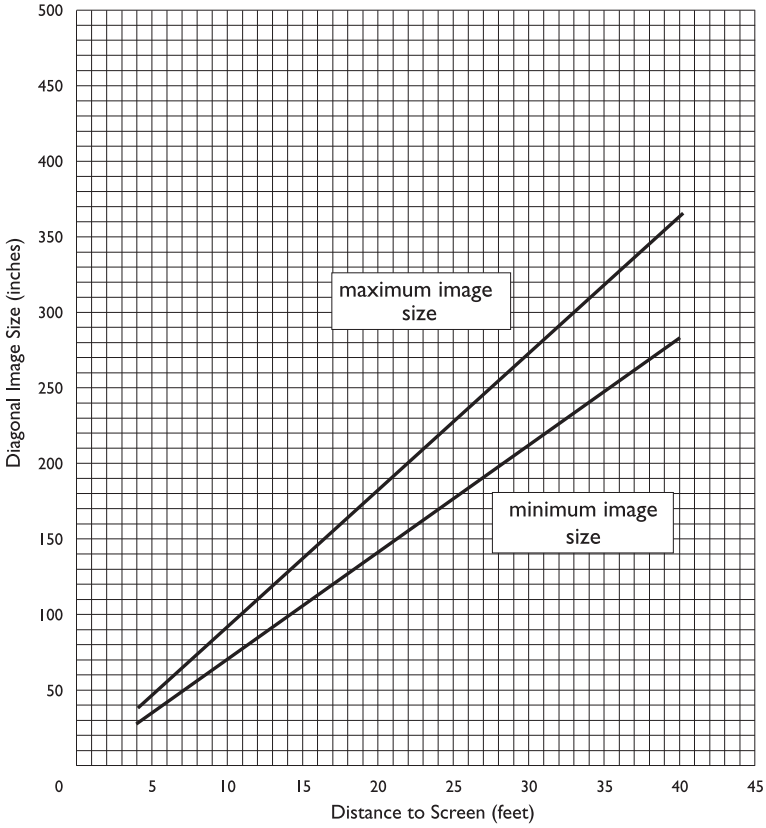


**FIGURE 38**

*Projected image size*

***Table 1:***
***Image Size, Width and Height for Lens at Maximum Image Size***

| Distance to Screen (feet) | Diagonal (inches) | Width (inches) | Height (inches) |
|---|---|---|---|
| 4 | 36 | 29 | 22 |
| 10 | 91 | 73 | 55 |
| 15 | 137 | 110 | 82 |
| 20 | 182 | 146 | 109 |
| 25 | 228 | 182 | 137 |
| 30 | 274 | 219 | 164 |
| 35 | 319 | 255 | 191 |
| 40 | 365 | 292 | 219 |

***Table 2:***
***Image Size, Width and Height for Lens at Minimum Image Size***

| Distance to Screen (feet) | Maximum Diagonal (inches) | Maximum Width (inches) | Maximum Height (inches) |
|---|---|---|---|
| 4 | 28 | 22 | 17 |
| 10 | 71 | 57 | 43 |
| 15 | 106 | 85 | 64 |
| 20 | 142 | 114 | 85 |
| 25 | 177 | 142 | 106 |
| 30 | 212 | 170 | 127 |
| 35 | 248 | 198 | 149 |
| 40 | 283 | 226 | 170 |