USA's primary source for projector lamps

myprojectorlamps

PROJECTOR OWNER'S MANUAL

Boxlight

LP210

Need a replacement lamp for this projector?

www.myprojectorlamps.com

Original manufacturer manual, provided unmodified as a courtesy of MyProjectorLamps.com.
All trademarks belong to their respective owners.

Quick Start

LitePro® 210

1 Rotate the CableWizard selector to expose the correct connectors for your computer.

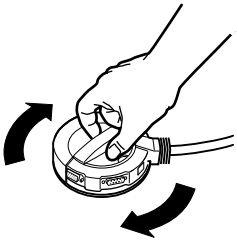

Macintosh® or PowerBook™? →

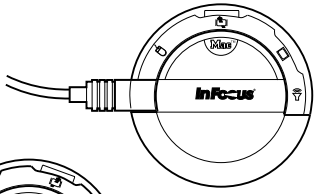

IBM®-compatible PC? →

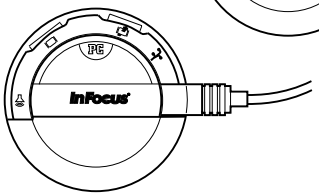

2 Plug the CableWizard into the LitePro 210.

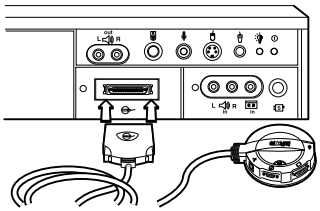

3 Unplug the cable that connects your monitor to your computer.

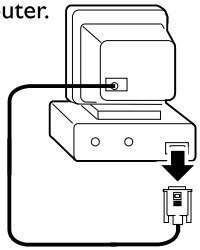

4 Attach the CableWizard to your computer.

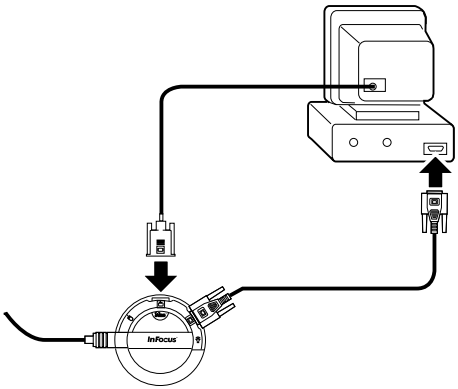

5 Plug the power cord into the 210 and into an electrical outlet.

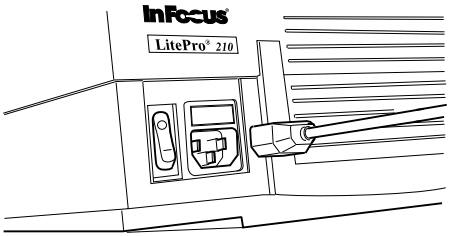

6 Turn on the LitePro 210. Turn on your monitor. Turn on your computer. Refer to the *LitePro 210 User's Guide* for more information.

009-0214-01

InFocus® SYSTEMS

QUICK START

LitePro® 210

SAFETY SUMMARY: Please read these instructions before using your LitePro 210. Failure to comply could result in fire, electrical shock, personal injury or equipment damage.

Definition of Safety Icons on Product Labels

Refer to the User's Guide for more information.

Avoid hot surfaces.

Bulb explosion hazard.

Don't Look Into The Lens!

Be extremely careful not to look directly into the lens when the 210 is on. The bright light can harm your eyes. Be especially careful to keep children from looking into the lens.

Don't Disassemble

Do not open the 210 case! Doing so exposes you to an electric shock hazard. Except for the projection lamp, there are no user-serviceable parts. All service must be performed by an In Focus Systems Authorized Service Provider.

Avoid Hot Surfaces

The inside of the 210 lamp housing can be very hot. Allow the 210 to cool for at least 45 minutes before opening the lamp door to replace the lamp. Use extreme care. Avoid touching the hot surfaces inside.

Use Only The 210 Power Cord

Always use the power cord that came with the 210. Although other cords might look the same, they have not been safety-tested with the 210. Never use the power cord if it's damaged or frayed. When you disconnect the 210, always remove the power cord from the electrical outlet first, then from the 210.

Don't Defeat The Purpose Of The Grounding Plug

The 210 is grounded through the grounding conductor on the power cord. To avoid electric shock, plug the power cord into a properly wired receptacle.

Use The Correct Fuse

To avoid the risk of fire, use only a T6.3AH 250V 5x20mm fuse.

Avoid Liquid Spills

Don't set drinks on top of the 210. Spilled liquids can flow inside causing damage.

Don't Block Ventilation

Openings in the case provide ventilation to protect the 210 from overheating. Keep loose papers and other objects away from the bottom, top and side grills. Don't place the 210 on top of or close to a computer or other heat-producing equipment.

TABLE OF CONTENTS

Safety Summary **iii**

Introduction **1**
Image Resolution 1
Compatibility 2
Unpacking the Projector 2
Usage Guidelines 4
If You Need Assistance 4
Warranty 4

Setting up the Projector **5**
Connecting the CableWizard to the Projector 6
Selecting Connectors on the CableWizard 6
Preparing to Connect Your Equipment to the Projector 8
Connecting an IBM-Compatible Desktop Computer 9
Connecting an IBM-Compatible Laptop Computer 11
Connecting a Macintosh Desktop Computer 13
Connecting an Apple PowerBook Computer 15
Connecting a Video Player 17
Connecting an External Speaker and a Subwoofer 19
Connecting a Microphone 20
Connecting a PS/2-Compatible Mouse. 20
Connecting the Remote Control Cable 21
Powering up the Projector and Adjusting the Image 21
Turning Off the Projector 23

Using the Projector **25**
Basic Image Adjustment 25
Using the Remote Control 25
Adjusting the Projector 26
Using the Remote and Keypad Buttons 28
Using the Disk Mouse 32
Using the On-Screen Menus 32
Display Menu Functions 33
Audio Menu Functions 35
Image Menu Functions 37
Controls Menu Functions 39

Maintenance **41**
Cleaning the Lens 41
Removing and Replacing a Lens 41
Using the Zoom Lens 42
Replacing the Projection Lamp 43
Resetting the Lamp Monitor Light 44
Replacing the Batteries in the Remote Control 45
Replacing the Fuse 45
Using the Kensington Lock 47

Troubleshooting **49**
Solutions to Common Problems 50

Appendix **55**
Specifications 55
Accessories 57
Portable and Laptop Activation Chart 59
Using Video Mirroring with a PowerBook Computer 63
Projected Image Size 64

Index **67**

SAFETY SUMMARY

Please read these instructions carefully before using your LitePro 210 or 220. Failure to comply with them could result in fire, electrical shock, personal injury or damage to equipment.

These graphics are used throughout this manual to draw your attention to important information about the projectors.

NOTE: *Additional useful details or tips.*

CAUTION: *Steps to take to avoid damage to your equipment.*

WARNING: *Steps to take to avoid personal injury.*

These graphics are used on LitePro labels.

Attention - Refer to this User's Guide for important safety information.

Hot Surfaces - Avoid touching hot surfaces. Do not touch until the LitePro has cooled.

Lamp Explosion Hazard - If you continue to use the lamp after the lamp monitor light comes on, it may explode, severely damaging your LitePro. Be sure to replace the lamp when the lamp monitor light comes on as described in this User's Guide. Refer to the section titled "Replacing the Projection Lamp" for information about changing the bulb.

Do Not Look Into The Lens!

Be extremely careful not to look into the projection lens when the LitePro is turned on. The bright light may harm your eyes. Be especially careful to keep children from looking into the lens.

Power Source
Use only a three-wire grounding type power source. The power source should not exceed 250 volts rms between the supply conductors or between either conductor and the ground.

Power Cord
Use only the power cord that was shipped with the LitePro. Although other power cords might be similar in appearance, they have not been safety-tested with the 210 or 220. Do not use a power cord if it has become damaged or frayed. Contact your In Focus dealer or call In Focus if you need to replace your power cord.

Grounding
The projector is grounded through the grounding conductor on the power cord. To avoid electric shock, plug the power cord into a properly wired receptacle. Do not defeat the purpose of the grounding-type plug.

Fuse
For continued protection against the risk of fire, use only the specified fuse. It must be a time delay, high breaking capacity 5x20mm fuse with the following amperages: for 6.3amp use T6.3AH, for 8amp use T8AH. Refer to page 55 for more information about fuse specifications and to page 45 for instructions on replacing the fuse.

***CAUTION**: Be sure to replace the projection bulb when the lamp monitor light comes on as described on page 43. If the lamp remains in use too long, there is a danger of bulb explosion. If this happens, your LitePro will be severely damaged.*

Lamp
To avoid overheating and unacceptable image quality, replace the projection lamp with a lamp of the specified type. Refer to page 56 for lamp specifications and to page 43 for instructions on replacing the lamp.

Lamp Compartment
To avoid burns or an explosion hazard, do not open the lamp module door until the projector is turned off and the lamp has cooled. The hot lamp contains high pressure and can explode if damaged or old. Follow the instructions in this manual for lamp replacement carefully.

Hot Surfaces

Allow the projector to cool at least 45 minutes before replacing a lamp. When you open the lamp housing, be very careful not to touch the hot surfaces inside.

Ventilation and Overheating

Openings in the projector case provide ventilation to protect it from overheating. Keep loose papers and other objects well away from the bottom, top and side grills. Do not place the projector on top of or close to a computer or other heat-producing equipment.

Liquid Spills

Do not set drinks on top of the projector. Spilled liquids can flow inside and cause damage.

Do Not Disassemble

All LitePro service must be performed by an authorized In Focus service center. The only user-serviceable part in the LitePro is the projection lamp, which you can replace by opening the lamp cover on the bottom of the projector (see page 43). Do not open any other part of the LitePro. If your LitePro needs repair, call In Focus Technical Support as described on page 4. Before you call Technical Support, you may want to refer to “Troubleshooting” starting on page 49 to see if you can resolve the problem yourself.

***NOTE**: If you open the LitePro case, you will void the warranty.*

Don’t Set the LitePro on its Lens

To protect the lens when you are transporting the LitePro, adjust the lens so it is fully retracted (turn it clockwise) before you pack it.

Place the LitePro in its carrying case with the lens facing upwards. You may damage the LitePro if you set it on its lens.

INTRODUCTION

The In Focus Systems LitePro® 210 and 220 multimedia projectors combine powerful and sophisticated features with easy-to-use, intuitive controls. Built-in multimedia features include audio by JBL™, a palette of 16.7 million colors and active matrix liquid crystal display (LCD) technology. The 200 series projectors are ideal for high-performance business, training and imaging applications that demand exceptional color quality. The 210 has VGA graphics, the 220 has SVGA graphics. The user interfaces of the two products are identical; information in this User's Guide applies to both products.

Image Resolution

LitePro 210

The VGA resolution of the 210's projected image is 640x480. It displays computer images just as they appear on your computer's monitor. Screen resolutions between 640x480 and 800x600 are compressed to 640x480. The 210 cannot compress screen resolutions above 800x600. If your computer's screen resolution is higher than 800x600, reset it to a lower resolution before you connect the 210.

LitePro 220

The SVGA resolution of the 220's projected image is 800x600. It displays computer images just as they appear on your computer's monitor. Screen resolutions between 800x600 and 1024x768 are compressed to 800x600. The 220 cannot compress screen resolutions above 1024x768. If your computer's screen resolution is higher than 1024x768, reset it to a lower resolution before you connect the 220.

NOTE: *The 220 automatically expands 640x480 images to 800x600. You can display these images at 640x480 by turning off the Auto Resize feature. See "Auto Resize" on page 37 for more information.*

Compatibility

The projector is compatible with a wide variety of computers and video devices, including:

- IBM-compatible computers, including laptops, up to 800x600 resolution (LitePro 210) or 1024x768 resolution (LitePro 220) at 75Hz.
- IBM PS/2 in VGA and MCGA modes.
- Apple Macintosh and PowerBook computers up to 800x600 resolution (LitePro 210) or 1024x768 resolution (LitePro 220).
- Various VCRs, camcorders and laser disc players.

The projector is not compatible with these systems:

- IBM-compatible computers in CGA or EGA graphics mode.
- Macintosh 128, 512, Plus, SE, SE/30 or Classic.

Unpacking the Projector

The projector comes with the items shown in Figure 1. Check to make sure all are included. Contact your In Focus dealer immediately if anything is missing.

If you are experienced in setting up presentation systems, use the *LitePro 210/220 Quick Start* card that was included in the shipping box. For complete details on connecting and operating the projector, refer to this User's Guide.

NOTE: *The contents of your shipping box may vary depending on the LitePro configuration you've ordered.*

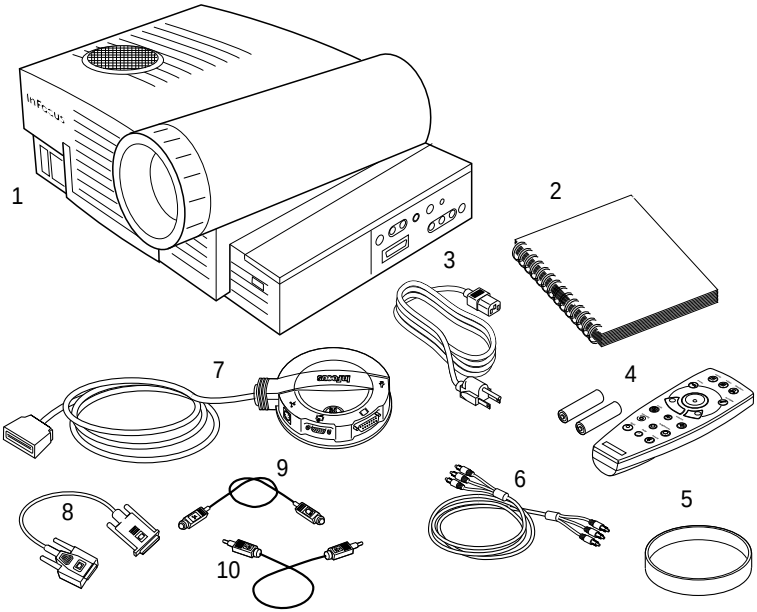

FIGURE 1

Shipping box contents

1. LitePro 210 or 220 projector
2. *LitePro 210/220 User's Guide*
3. power cord
4. remote and batteries
5. lens cap
6. RCA audio/video (A/V) cable
7. CableWizard
8. CableWizard computer cable
9. CableWizard mouse cable
10. CableWizard audio cable

Not shown: Quick Start card, remote cable

Usage Guidelines

- Do not look directly into the projection lens when the projector is turned on. The bright light may harm your eyes.
- The top and bottom of the projector can be very hot to the touch after use. Use extreme care or let it cool before lifting it.
- Do not block the grills at the front or top of the projector. Restricting the air flow can cause it to overheat and turn off.
- Handle the projector as you would any product with glass components. Be especially careful not to drop it.
- Avoid leaving the projector in direct sunlight or extreme cold for extended periods of time. If this happens, allow it to reach room temperature before use.
- Transport the projector in a vendor-approved hard or soft case. Part numbers for these cases are listed on page 57. Call your In Focus dealer to order.

***NOTE**: If the LitePro overheats and turns off, you must wait about 45 seconds before you attempt to turn it back on.*

If You Need Assistance

The first place to look for help is in this manual. Be sure to check the guidelines in "Troubleshooting" on page 49.

If this manual doesn't answer your question, call your In Focus dealer. You can also call In Focus Customer Service directly at **1-800-799-9911**. Call between 6 a.m. and 5 p.m. PST, Monday through Friday. In Europe, call In Focus in The Netherlands at **(31) 23-5623200**. In Singapore, call **(65) 334-9005**. Or, send us an e-mail at **techsupport@infs.com**.

The In Focus World Wide Web address is **http://www.infs.com**.

Warranty

These products are backed by a limited one-year warranty. The details of the warranty are printed at the back of this manual. Longer term warranties can be purchased from your In Focus dealer. Refer to page 58 for part numbers.

SETTING UP THE PROJECTOR

1 Place the projector on a flat surface.

- The projector must be within 10 feet of your power source and within 10 feet of your computer.
- If you want to project from behind a translucent screen, set up the projector behind your screen. See “Rear Projection” on page 40 to reverse the image.
- If you are installing the projector on the ceiling, refer to the *LitePro 200 Series Ceiling Mount Installation Guide* for more information. To turn the image upside down, see “Ceiling” on page 39. The Ceiling Mount Kit is sold separately; see page 58.

2 Position the projector the desired distance from the screen.

- The distance from the lens of the projector to the screen determines the size of the projected image. Figure 2 shows three projected image sizes using the varifocal lens or the zoom lens at minimum focusing distance. For more information about image size, see “Projected Image Size” on page 64.

3 Make sure the projector and your computer are turned off.

***NOTE**: An optional extension cable, sold separately, lets you increase the distance between the projector and your computer to 50 feet. See “Accessories” on page 57.*

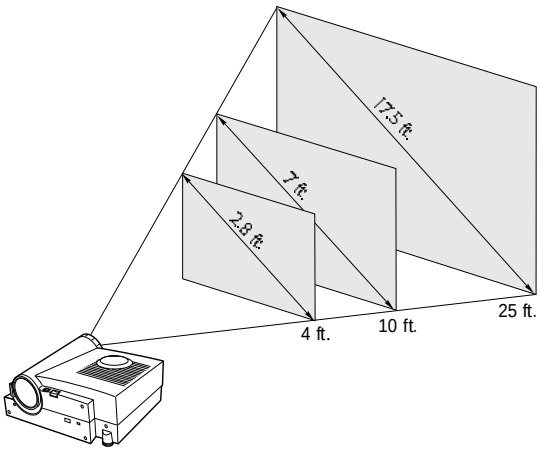

FIGURE 2

Projected image size (varifocal lens, zoom lens at minimum focusing distance)

Connecting the CableWizard to the Projector

The CableWizard simplifies the connection process by providing a central hub for all the connections between the projector and your computer. The connectors on the CableWizard are labeled with icons.

Connect the end of the CableWizard cord to the connector on the projector's connector panel (Figure 3).

CAUTION: *Turn off the computer, monitor and projector whenever you connect or disconnect cables.*

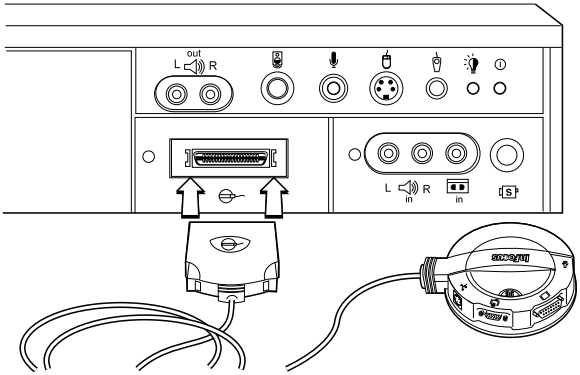

FIGURE 3

Connecting the CableWizard cable to the projector

Selecting Connectors on the CableWizard

Turn the selector on the top of the CableWizard to reveal the correct connectors for your computer.

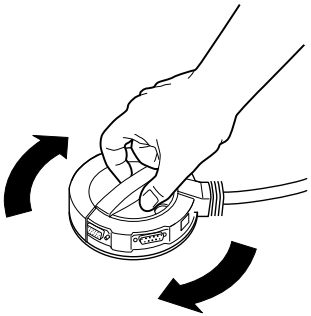

FIGURE 4

Selecting connectors on the CableWizard

- If you're connecting an **IBM-compatible desktop or laptop computer**, turn the selector until the window displays "PC."

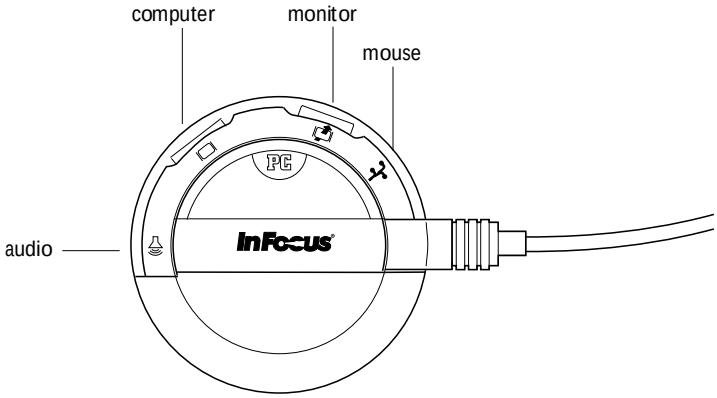

FIGURE 5

Selecting the IBM-compatible connectors on the CableWizard

- If you're connecting a **Macintosh desktop or an Apple PowerBook computer**, turn the selector until the window displays "Mac™."

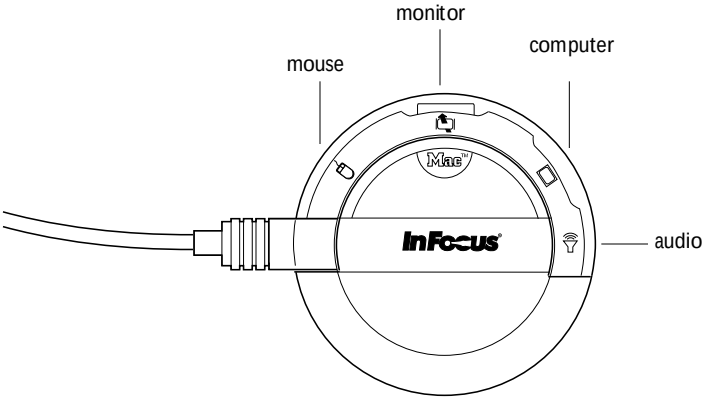

FIGURE 6

Selecting the Macintosh connectors on the CableWizard

NOTE: *You must disconnect all cables before turning the selector on the CableWizard.*

Preparing to Connect Your Equipment to the Projector

Now you're ready to connect your equipment. Computers are connected to the Cable Wizard. Video players and other equipment, such as external speakers, are connected directly to the projector.

Steps for connecting the different types of equipment are given on the pages listed below.

***NOTE**: Before you continue, make sure the projector and your equipment are turned off. If you're connecting a computer, make sure the distance between it and the projector is 10 feet or less and you've selected the appropriate connectors on the CableWizard.*

Equipment you want to connect	Page
IBM-compatible desktop computer	page 9
IBM-compatible laptop computer	page 11
Macintosh desktop computer	page 13
Apple PowerBook	page 15
Video player	page 17
External speakers or subwoofer	page 19
Microphone	page 20
PS/2-compatible mouse	page 20
Remote control cable	page 20

Connecting an IBM-Compatible Desktop Computer

1. Locate the cable that connects your monitor to your computer. Unplug it from the computer.

2. Plug the end of the CableWizard computer cable into the monitor connector on your computer.

3. Plug the end of the computer cable into the connector on the CableWizard.

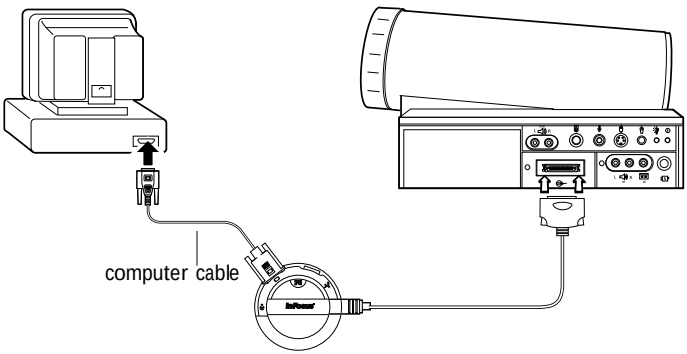

FIGURE 7

Connecting the CableWizard computer cable to an IBM-compatible desktop computer

Do you want to display the image on your computer's monitor as well as on the projection screen?

1. Plug your monitor's cable into the connector on the CableWizard.

Do you want to play your computer's audio on the projector?

1. Unplug the audio cable, if present, from your computer.

2. Plug either end of the CableWizard audio cable into the audio connector on your computer.

3. Plug the other end of the audio cable into the connector on the CableWizard.

Do you want to control your computer's mouse from the projector's remote or keypad?

1. Unplug the mouse cable from your computer.
2. Plug the end of the CableWizard mouse cable into the mouse connector on your computer.
3. Plug the end of the CableWizard mouse cable into the connector on the CableWizard.

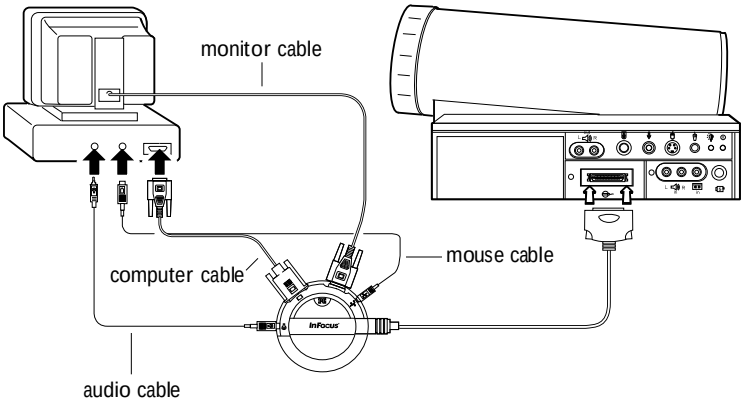

FIGURE 8

Connecting the CableWizard monitor, audio and mouse cables to an IBM-compatible desktop computer

Now you're ready to power up the projector and your computer. Skip to "Powering up the Projector and Adjusting the Image" on page 21.

Connecting an IBM-Compatible Laptop Computer

1 Plug the end of the CableWizard computer cable into the video connector on your computer.

2 Plug the end of the CableWizard computer cable into the connector on the CableWizard.

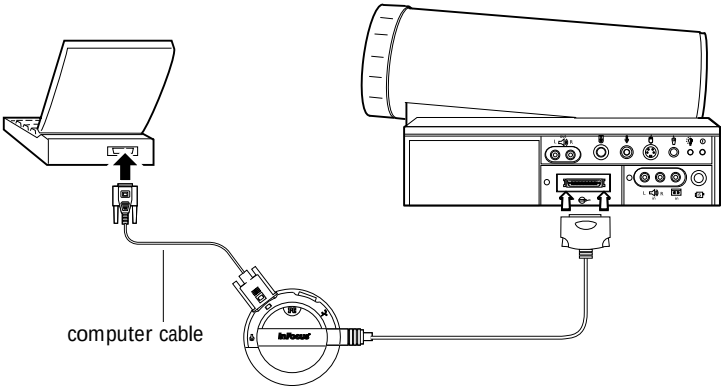

FIGURE 9

Connecting the CableWizard computer cable to an IBM-compatible laptop computer

NOTE: *Many laptop computers do not automatically turn on their external video port when a secondary display device such as a projector is connected. Refer to your computer manual for the command that activates the external video port. Activation commands for some laptop computers are listed in the Appendix of this manual on page 59.*

Do you want to play your computer's audio on the projector?

1 Plug either end of the CableWizard audio cable into the audio connector on your computer.

2 Plug the other end of the audio cable into the connector on the CableWizard.

NOTE: *If you don't want audio or mouse control, you can use the CableWizard Lite. CableWizard Lite is ordered separately. See "Accessories" on page 57.*

Do you want to control the computer's mouse from the projector's remote or keypad?

1. Locate the mouse cable and unplug it from your computer.
2. Plug the end of the CableWizard mouse cable into the mouse connector on your computer.
3. Plug the end of the CableWizard mouse cable into the connector on the CableWizard.

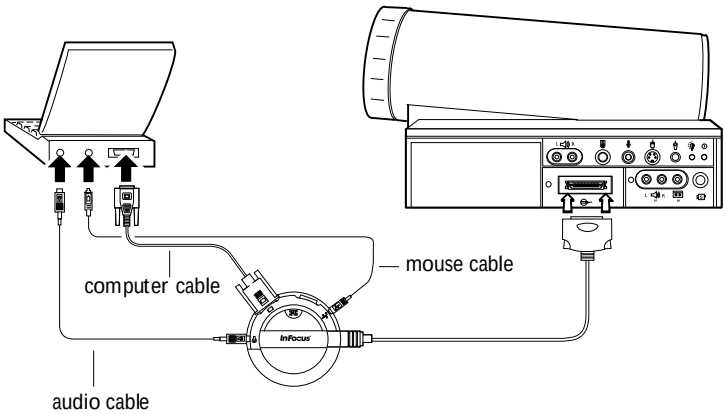

FIGURE 10

Connecting the CableWizard audio and mouse cables to an IBM-compatible laptop computer

Now you're ready to power up the projector and your laptop. Skip to "Powering up the Projector and Adjusting the Image" on page 21.

Connecting a Macintosh Desktop Computer

1. Locate the cable that connects the monitor to your computer. Unplug it from the computer.
2. Plug the end of the CableWizard computer cable into the monitor connector on your computer.
3. Plug the end of the CableWizard computer cable into the connector on the CableWizard.

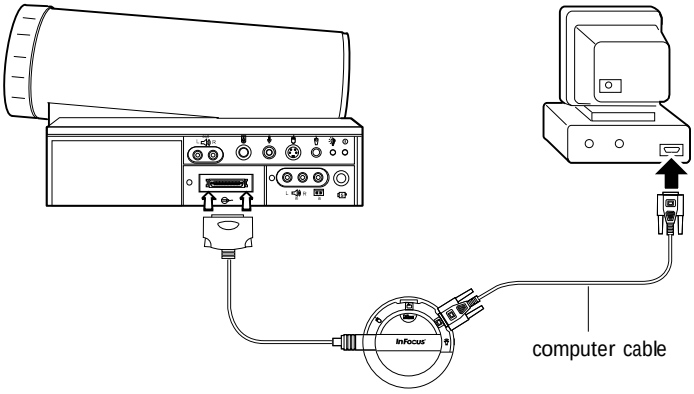

FIGURE 11

Connecting the CableWizard computer cable to a Macintosh desktop computer

Do you want to display the image on your computer's monitor as well as on the projection screen?

1. Plug the monitor's cable into the connector on the CableWizard.

Do you want to play your computer's audio on the projector?

1. Unplug the audio cable, if present, from your computer.
2. Plug either end of the CableWizard audio cable into the audio connector on your Macintosh.
3. Plug the other end of the audio cable into the connector on the CableWizard.

Do you want to control the computer's mouse from the projector's remote or keypad?

1. Unplug the mouse from your Macintosh or locate an unused ADB connector.

2. Plug the end of the CableWizard mouse cable into the mouse connector or the (ADB) connector on your Macintosh.

3. Plug the end of the CableWizard mouse cable into the connector on the CableWizard.

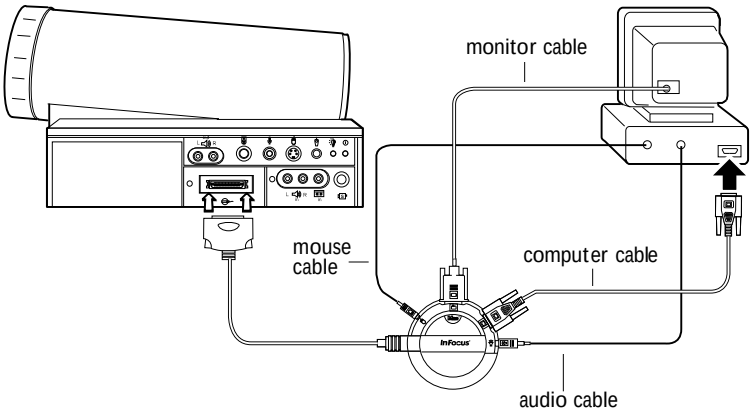

FIGURE 12

Connecting the CableWizard monitor, audio and mouse cables to a Macintosh desktop computer

Now you're ready to power up the projector and the Macintosh. Skip to "Powering up the Projector and Adjusting the Image" on page 21.

Connecting an Apple PowerBook Computer

1. Plug the end of the CableWizard computer cable into the video connector on your PowerBook.
2. Plug the end of the CableWizard computer cable into the connector on the CableWizard.
3. If you want the projector display to be the same as the PowerBook's screen display, turn on video mirroring. (See "Using Video Mirroring with a PowerBook Computer" on page 63 for additional information.)

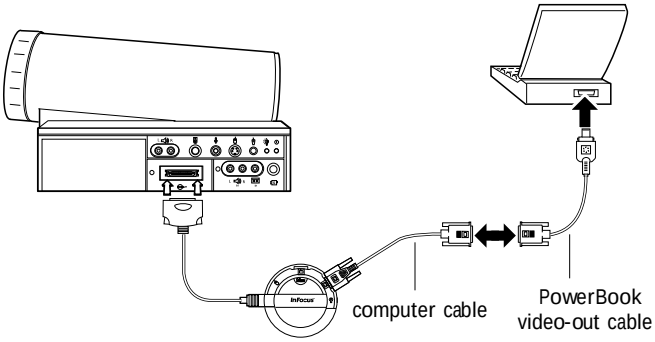

FIGURE 13

Connecting the CableWizard computer cable to an Apple PowerBook

Do you want to play your computer's audio on the projector?

1. Plug either end of the CableWizard audio cable into the audio connector on your PowerBook.
2. Plug the other end of the audio cable into the connector on the CableWizard.

NOTE: *Some PowerBooks require the Apple-supplied video-out cable for external video. Connect it between the PowerBook and the CableWizard computer cable as shown in Figure 13.*

Do you want to control the computer's mouse from the projector's remote or keypad?

1. Locate the mouse cable and unplug it from your PowerBook.
2. Plug the end of the CableWizard mouse cable into the (ADB) connector on your PowerBook.
3. Plug the end of the CableWizard mouse cable into the connector on the CableWizard.

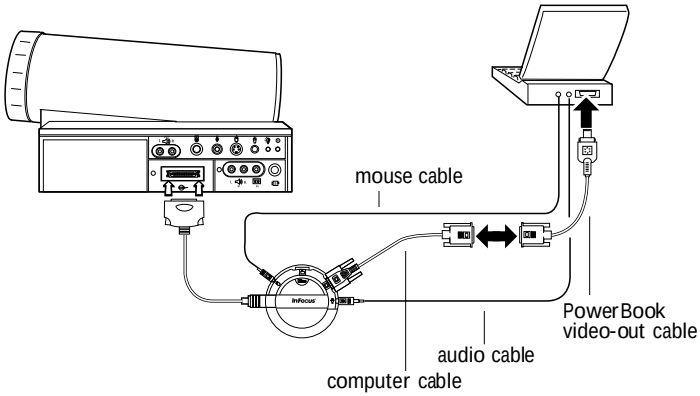

FIGURE 14

Connecting the CableWizard audio and mouse cables to a PowerBook

Now you're ready to power up the projector and your PowerBook. Skip to "Powering up the Projector and Adjusting the Image" on page 21.

Connecting a Video Player

1. If your video player uses a round, one-prong composite video connector, you'll need only the A/V cable that shipped with the projector.
   - If your video player uses a round, four-prong S-video connector, you'll need an S-video cable in addition to the A/V cable. The S-video cable is sold separately. (See "Accessories" on page 57.)
2. Plug the A/V cable's yellow connector into the "video-out" port on your video player (Figure 15). This port may be labeled "To Monitor."
   - If you're using an S-video cable, connect it to the "s-video out" connector on the video player (Figure 16).
3. Plug the other yellow connector into the composite connector on the back of the projector.
   - If you're using S-video, plug the other end of the cable into the "s-video" connector on the projector (Figure 16).

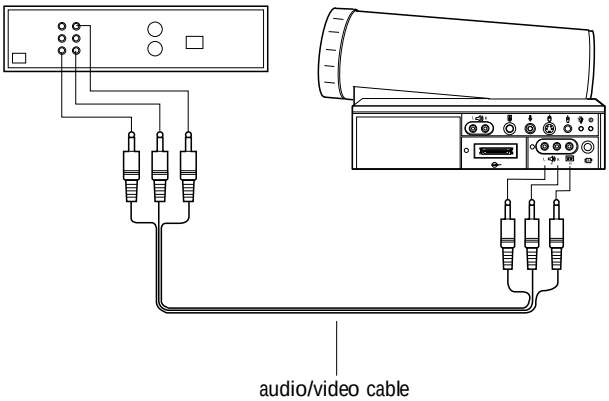

FIGURE 15

Connecting the projector to a video player using the standard A/V cable (with composite video connector)

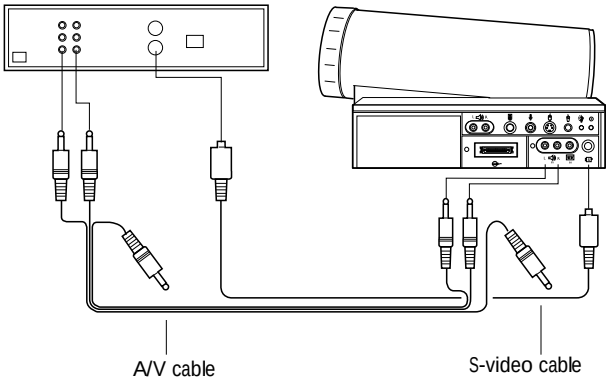

FIGURE 16

Connecting the projector to a video player using an S-video cable and the audio connectors on the standard A/V cable

4 Plug the A/V cable's white connector into the left "audio out" port on your video player. Plug the cable's red connector into the right "audio out" port on the video player (Figure 15 and Figure 16).

- If you're using an S-video cable, the yellow connectors on the A/V cable remain unused (Figure 16).

5 Plug the A/V cable's other white and red connectors to the left and right "audio in" ports on the projector.

CAUTION: *Your video player may also have a "Video Out" port for a coaxial cable connection. DO NOT use this to connect to the projector.*

The projector is compatible with the three major broadcast video standards: NTSC, PAL and SECAM. It automatically adjusts to optimize its performance for the incoming video. You can also set the video standard manually from the projector's Controls menu; see "Video Standard" on page 39.

Connecting an External Speaker and a Subwoofer

- To connect one or two external speakers, plug the speaker cables into the two (audio out) connectors on the projector.
- To connect a subwoofer, plug the subwoofer cable into the connector on the projector.

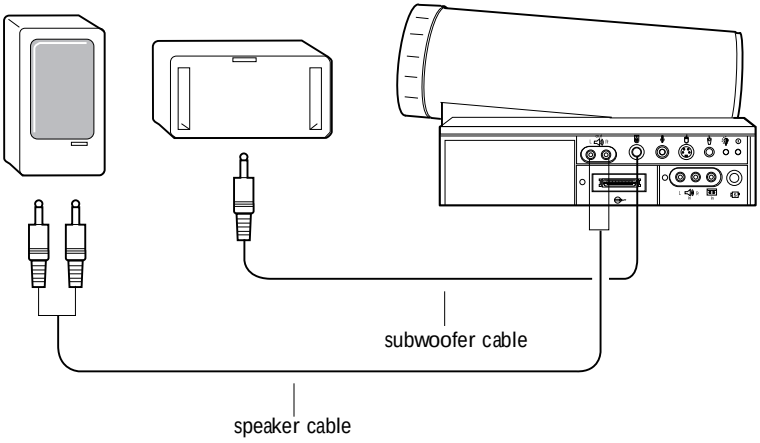

FIGURE 17

Connecting an external speaker and a subwoofer

***NOTE**: The external speakers must be amplified.*

Connecting a Microphone

- To connect a microphone to the projector, plug the microphone cable into the connector on the projector.

***CAUTION**: Always keep the source volume at its lowest level when installing the microphone. For information about setting the microphone level, see page 35.*

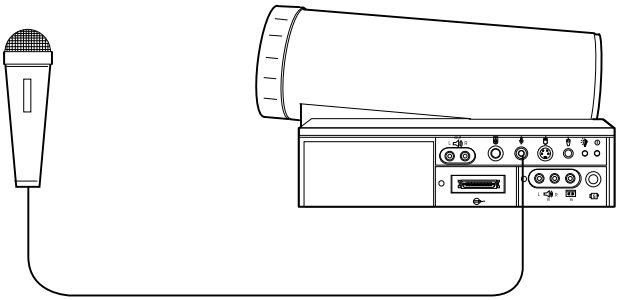

FIGURE 18

Connecting a microphone

Connecting a PS/2-Compatible Mouse

- To connect a PS/2-compatible mouse to the projector, plug the mouse cable into the connector on the projector.

***CAUTION:** Turn off your computer, monitor and the projector whenever you connect the mouse. Power on the projector first, then the computer.*

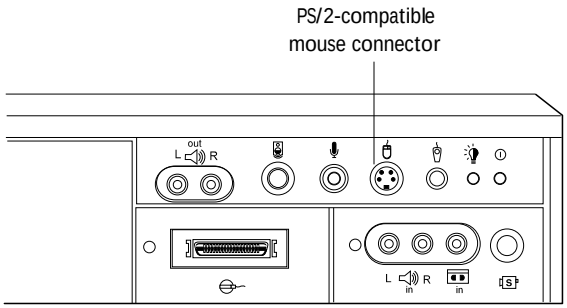

FIGURE 19

The PS/2-compatible mouse connector on the projector

***NOTE:** Using a mouse makes using the Scribble feature easier.*

Connecting the Remote Control Cable

If the projector cannot receive the remote's signal, as may be the case if you're using rear projection, connect the remote directly to the projector with the remote cable.

1. Plug the end of the remote cable with the cylinder into the connector on the projector.
2. Plug the other end into the plug on the remote.

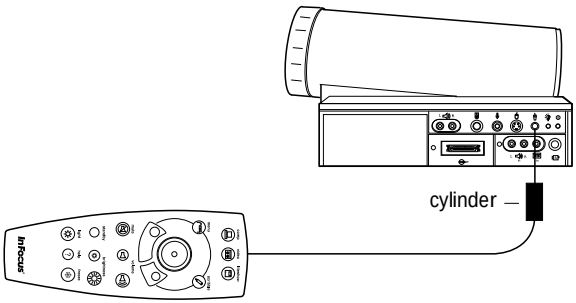

FIGURE 20

Connecting the remote control cable

Powering up the Projector and Adjusting the Image

1. Remove the lens cap.
2. Plug the power cord into the projector (Figure 21), then plug it into your electrical outlet. A surge-protected power strip is recommended if power surges are common in your area.

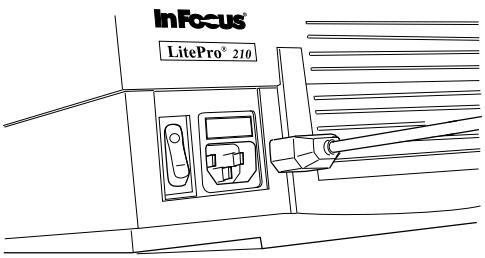

FIGURE 21

Connecting the power cord to the projector

***NOTE**: Always use the power cord that shipped with the projector.*

***CAUTION**: If the lamp LED remains solidly lit after the LitePro has powered on, the lamp needs to be replaced. If the lamp remains in use too long, it may explode and severely damage the LitePro. Refer to "Replacing the Projection Lamp" on page 43 for more information.*

3 Turn on the projector.

- The power indicator and lamp module LEDs (Figure 22) light solidly while the projector initializes. The power LED blinks green when the projector begins to power up. When the projector reaches full power, the power LED lights solid green and the lamp LED goes out.

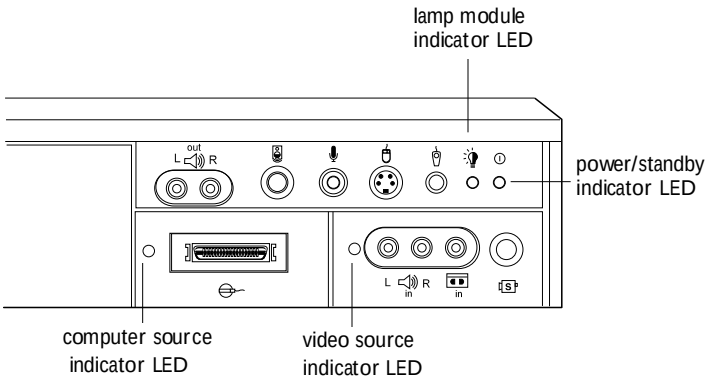

FIGURE 22

Indicator LEDs

4 If you connected a video player, turn it on.

- Press the **video** button on the remote control or keypad to display the image from your video player. The video source indicator LED displays a solid green indicating the video source is active (Figure 22). Press **computer** to return to your computer's image.
- Use the **volume** buttons to adjust the volume.
- If you don't want to hear the sound from your video player, press the **mute** button.

5 If you connected any external speakers, turn them on.

6 If you connected your monitor, turn it on.

7 Turn on your computer.

- The computer image should display on the projection screen.
- The computer source indicator LED displays a solid green indicating the computer source is active (Figure 22).
- If necessary, use the **brightness** buttons on the remote control or keypad to adjust the brightness. You can make further adjustments to the image from the projector's on-screen menus. To open the menus, press the **menu** button on the remote control or keypad. Then select the Display menu or the Image menu. For more information about the menus, see page 32.
- If you don't want to hear the sound from your computer or video player, press the **mute** button. (Pressing **mute** does not mute the microphone.)

__NOTE__: With some computers, the order in which you power up the equipment is very important. We recommend that you always turn on the computer LAST. Turn on all other pieces of equipment (including the computer's monitor) before you turn on the computer.

Turning Off the Projector

If you want to turn off the projector for a short period of time, press the **standby** button on the remote control or keypad. This turns off the lamp but keeps the projector running. The power/standby indicator LED (Figure 22) blinks green while the projector is in standby. To exit standby mode, press the **standby** button once. (It takes several seconds for the projection lamp to reach full power and project the image again.)

To completely power off the projector, press the "O" side of the power switch. If you want to turn the projector back on immediately, you must allow about 45 seconds for the lamp to cool. The lamp won't light if it's too hot.

__NOTE:__ When you disconnect the projector after you have switched it off, always remove the power cord from the electrical outlet first, then remove it from the projector.

USING THE PROJECTOR

This section describes how to use and make adjustments to the projector. It also provides a reference to the remote control buttons and the options available from the on-screen menus.

Basic Image Adjustment

1. Make sure you have powered up your equipment in the right order (page 21).
2. If the image doesn't display completely, adjust the height of the projector (page 26) or center the image by adjusting its horizontal or vertical position (page 38).
3. If the image is out of focus, rotate the lens to focus it (page 26).
4. If the image appears to shimmer or if it has blurry vertical bars after you have adjusted the focus, turn **Auto Image** (page 37) off and then back on to reset the automatic sync and tracking. If that doesn't clear up the image, adjust the sync (page 37) and / or the tracking (page 38) manually.
5. If the colors don't look right, adjust the brightness (page 29).

Using the Remote Control

Point the remote control at the projection screen or at the front or rear of the projector. The range for optimum operation is about 40 feet. If you point the remote at the projection screen, the distance to the screen and back to the projector must be less than or equal to 40 feet. For best results, point the remote directly at the front or the rear of the projector.

NOTE: *If you can't aim the remote control at the projector so that its signal is received — for example, when using rear projection — connect the remote directly to the projector with the remote control cable (page 21).*

Adjusting the Projector

To focus the image, rotate the projection lens until the image is clear. Rotate the lens clockwise for a longer focusing distance; counterclockwise for a shorter focusing distance.

If the projected image seems wider at the bottom or at the top, rotate the keystone adjustment dial on the back of the projector until the image is correct (Figure 23).

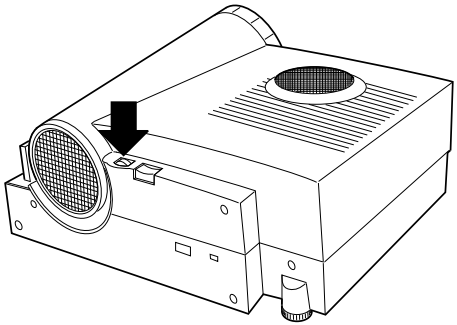

FIGURE 23

Keystone adjustment knob

The projector is equipped with a self-locking, quick-release elevator foot and a leveling knob.

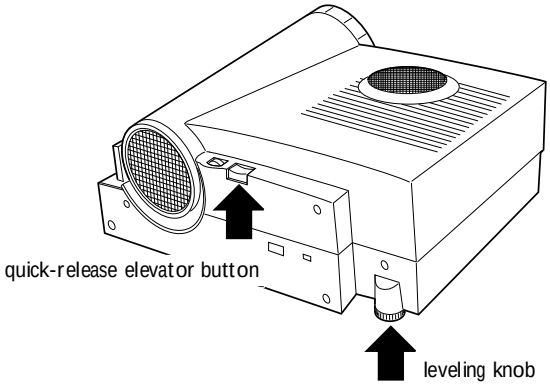

FIGURE 24

Quick-release elevator foot and leveling knob

To raise the projector:

1. Raise the front of the projector off the table by lifting up on the handle (Figure 25).
2. While holding the projector, press and hold the quick-release button (Figure 25).
3. When the projector is the height you want, release the button to lock the elevator foot into position.
4. If necessary, use the leveling knob (Figure 24) to adjust the angle of the projected image.

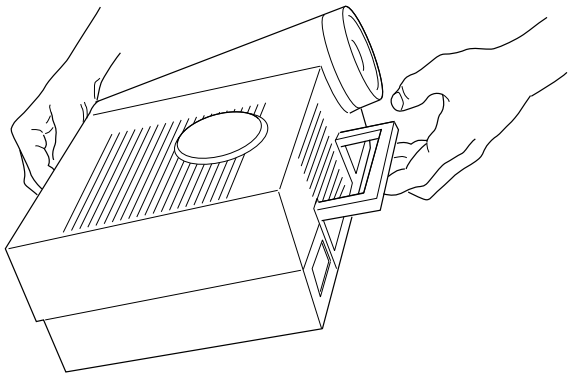

FIGURE 25

Adjusting the height of the projector

To lower the projector:

1. Hold the projector's handle.
2. Press the elevator's quick release button.
3. Lower the projector.
4. If necessary, use the leveling knob (Figure 24) to readjust the angle of the projected image.

***CAUTION**: Always hold the projector's handle when you press the elevator's quick release button.*

Using the Remote and Keypad Buttons

This section provides an alphabetical reference to the remote and keypad buttons.

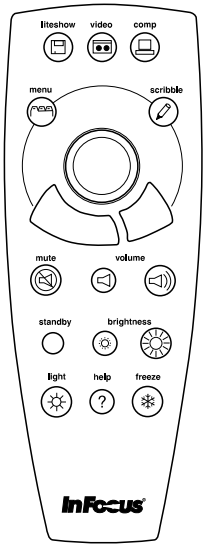

FIGURE 26

Remote control

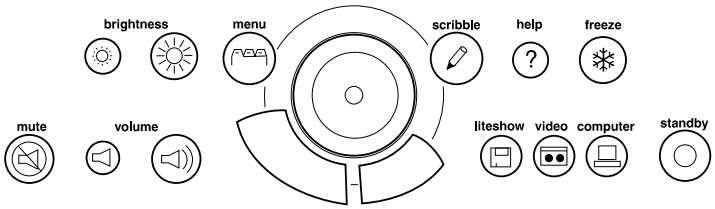

FIGURE 27

Keypad

Brightness

Adjusting the brightness lightens or darkens the image.

- To darken the image, press
- To lighten the image, press

The **brightness** buttons are auto-repeating; they repeat their function as long as you hold down the button.

Computer

When you have more than one source (computer or video) connected to the projector, select between them by pressing the button for the source you want.

Press **computer** to display the computer image.

Freeze

The **freeze** button halts, or “freezes” the projected image. Use this button to freeze a frame of video (the video continues to run but the projected image is frozen). You can also freeze an image from a computer source on the screen, allowing you to perform other operations on the computer without the audience seeing them. Press **freeze** again when you want the image to return to normal.

Help ?

Press **help** to display the online help information.

Light

Press **light** to illuminate the buttons on the remote control. The light goes off automatically 10 seconds after you press any button.

LiteShow

The **liteshow** button will be used to display a LiteShow presentation from disk. Call your In Focus dealer for availability.

Menu

Press **menu** to open the on-screen menus. Press **menu** again to close the menus. When you close the menus, the projector saves any changes you made. For more information about the on-screen menus, see page 32.

Mute

Pressing the **mute** button silences the internal speakers. It also silences any external speakers that are connected. It does not mute the microphone.

*NOTE: Pressing **mute** has no effect on microphone volume.*

To return the volume to its previous setting, press **mute** again or press either **volume** button.

Scribble

The **scribble** button activates on-screen annotation.

NOTE: Scribble functionality is enhanced by using a PS/2 mouse. See "Connecting a PS/2-Compatible Mouse" on page 20.

1. Press the **scribble** button. The cursor changes to a pencil.
2. Press the right disk mouse button (Figure 29) to display the color selector. Use the disk mouse to position the cursor on the desired color, then press the left mouse button. Press the right button again to close the color selector.
3. Move the pencil to where you want to start the annotation.
4. Press the left mouse button. The cursor changes to an upright pencil.
5. Use the disk mouse (or PS/2 mouse, if connected) to draw your annotation. Press the left mouse button to complete the annotation.
6. To exit Scribble, press the **scribble** button. The annotation is automatically deleted (it cannot be saved).

Standby

When you press **standby**, the display and audio turn off and the screen becomes black. After 30 seconds the lamp goes out if you haven't pressed any other buttons.

- If you press any button again within 30 seconds, the projector returns to normal operations immediately.
- If you press **standby** again after 30 seconds, there is about a 30-second delay before the lamp turns back on.

Video

When you have more than one source (computer or video) connected to the projector, select between them by pressing the button for the source you want.

Press **video** to display the image from your video player.

Volume

- To increase the volume, press
- To decrease the volume, press

The **volume** buttons are auto-repeating; they continue to adjust the volume as long as you hold them down. Volume adjustments are saved for each source you have connected.

NOTE: *Using a light touch on the disk mouse often gets the best results.*

Using the Disk Mouse

Press anywhere on the edge of the disk mouse to move the cursor on the screen. For example, if you press the top edge of the disk, the cursor moves up the screen; if you press the bottom edge, the cursor moves down (Figure 28). You can move the cursor at any angle by pressing the corresponding edge of the disk.

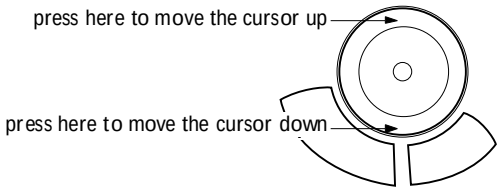

FIGURE 28

Using the disk mouse

Using the On-Screen Menus

The projector has four on-screen menus that allow you to make image adjustments and change a variety of settings. Most of these adjustments aren't available directly from the remote or keypad.

To open the on-screen menus, press the **menu** button on the remote or keypad. Press **menu** again when you want to close the menus.

To select a menu, use the disk mouse to move the cursor to the tab for the menu you want, then click either mouse button.

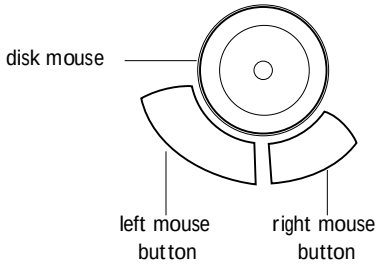

FIGURE 29

Disk mouse and mouse buttons

To change a menu setting, move the cursor to the setting you want to change, then use one of the two mouse buttons below the disk to make changes.

The status bar at the top of the menu display indicates the source that is currently active. For example, if you have both a computer and a video player connected, “Source: Computer” or “Source: Video” displays depending on whether you’ve pressed the **computer** or the **video** button on the remote or keypad.

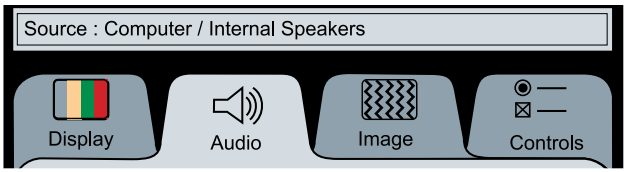

FIGURE 30

On-screen menu status bar

Display Menu Functions

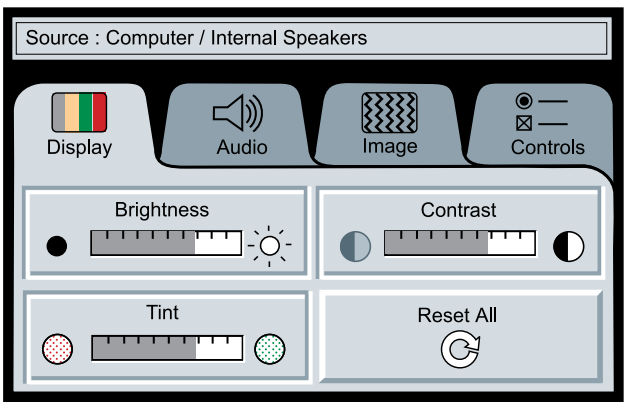

FIGURE 31

Display menu

NOTE: *Changing the brightness using the menu is the same as changing it using the remote or keypad.*

Brightness

Adjusting the brightness changes the intensity of the image.

- Press the left mouse button to darken the image.
- Press the right mouse button to lighten the image.

Contrast

The contrast controls the degree of difference between the lightest and darkest parts of the picture. Adjusting the contrast changes the amount of black and white in the image.

- Press the left mouse button to decrease the contrast.
- Press the right mouse button to increase the contrast, making the blacks appear blacker and the whites appear whiter.

Tint

The **Tint** setting adjusts the red-green color balance in the projected image. Changing the Tint setting has no effect on PAL or SECAM video sources.

- Press the left mouse button to increase the amount of green in the image.
- Press the right mouse button to increase the amount of red in the image.

Reset All

Click either mouse button to reset all the options (except Language and Video Standard) in all the menus to their original settings. This also returns Freeze and Mute to their default (off) settings.

Audio Menu Functions

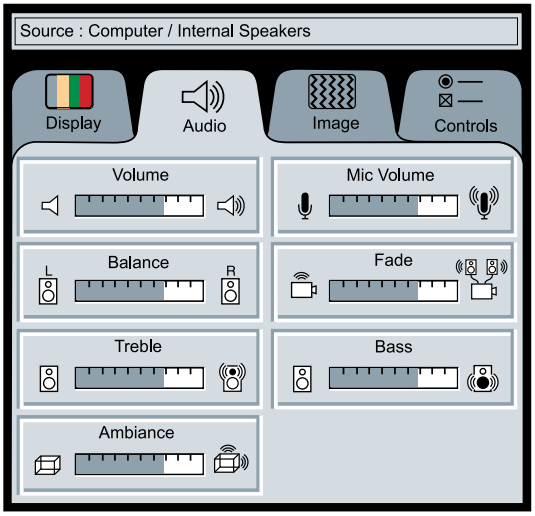

FIGURE 32

Audio menu

Volume

- Press the left mouse button to decrease the volume.
- Press the right mouse button to increase the volume.

Volume adjustments you make are saved for each source.

Mic Volume

- Press the right mouse button to increase the microphone volume.
- Press the left mouse button to decrease the microphone volume.

Balance

The **Balance** setting controls the balance between the left and right external speakers. It appears gray and won't highlight if you haven't connected external speakers. The **Balance** setting applies to all sources you have connected.

- Press the left mouse button to increase the amount of sound coming from the left external speaker.

NOTE: *Changing the volume from the menu is the same as changing it using the remote or keypad.*

- Press the right mouse button to increase the amount of sound coming from the right external speaker.

Fade

The **Fade** setting controls the balance between the internal and external speakers. The setting appears gray and won't highlight if external speakers aren't connected.

- Press the left mouse button to increase the amount of sound coming from the internal speakers.
- Press the right mouse button to increase the amount of sound coming from the external speakers.

Treble

The **Treble** setting controls the higher frequencies of your audio source.

- Press the left mouse button to decrease the treble.
- Press the right mouse button to increase the treble.

NOTE: *The **Treble** and **Bass** settings apply only to the projector's internal speakers. External speakers typically have their own tone controls.*

Bass

The **Bass** setting controls the lower frequencies of your audio source.

- Press the left mouse button to decrease the bass.
- Press the right mouse button to increase the bass.

Ambiance

The **Ambiance** setting controls the spaciousness of the sound quality from the projector's internal speakers.

- Press the left mouse button to increase the amount of sound coming from the rear internal speaker.
- Press the right mouse button to decrease the amount of sound coming from the top internal speaker.

Image Menu Functions

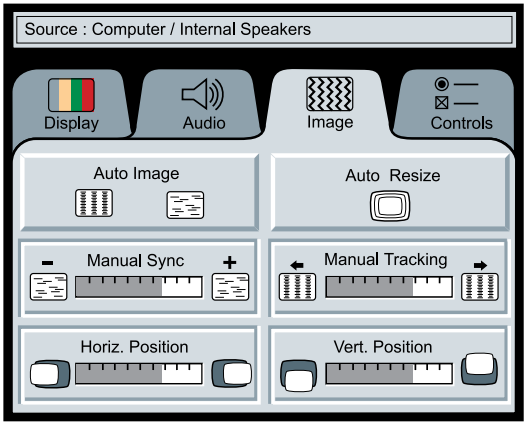

FIGURE 33

Image menu

Auto Image

The projector automatically adjusts tracking, signal synchronization and vertical and horizontal position for most computers. If you want to adjust these features manually, you must turn off **Auto Image** first by clicking it.

Auto Resize

The **Auto Resize** setting is available only for computer sources. **Auto Resize** automatically resizes the image by scaling it up or down.

When **Auto Resize** is on, the projector makes the best fit of the image to the screen. If you turn **Auto Resize** off (by clicking it), the image may be either cropped or too small for the screen.

Manual Sync

The projector adjusts signal synchronization automatically for most computers. But if the projected computer image looks fuzzy or streaked, try turning **Auto Image** off then back on again. If the image still looks bad, try adjusting the signal synchronization manually as described below.

1 Click the **Auto Image** button to turn Auto Image off.

NOTE: *Some screen savers interfere with the operation of Auto Image. If you're experiencing problems, try turning your screen saver off, then turning Auto Image off and back on.*

*NOTE: The **Manual Sync**, **Manual Tracking**, **Horiz. Position** and **Vert. Position** buttons are available only for computer sources. The projector sets these options automatically for a video source so they appear gray.*

2 Press the left or right mouse buttons repeatedly until the image is sharp and free of streaks.

Manual Tracking

The tracking function adjusts the projector to match the video signal from your computer. The projector usually adjusts the tracking automatically when you connect your computer. However, if the display shows evenly spaced, fuzzy, vertical lines or if the projected image is too wide or too narrow for the screen, try turning **Auto Image** off then back on again. If the image is still bad, try adjusting the tracking manually as described below.

1 Click the **Auto Image** button to turn Auto Image off.

2 Press the left or right mouse buttons repeatedly until the fuzzy vertical bars are gone.

Horiz. Position

Follow these steps to manually adjust the horizontal position.

1 Click the **Auto Image** button to turn Auto Image off.

2 Press the left mouse button to move the image right; press the right mouse button to move the image left.

Positioning adjustments are saved when you power off the projector.

Vert. Position

Follow these steps to manually adjust the vertical position.

1 Click the **Auto Image** button to turn Auto Image off.

2 Press the left mouse button to move the image down; press the right mouse button to move the image up.

Positioning adjustments are saved when you power off the projector.

Controls Menu Functions

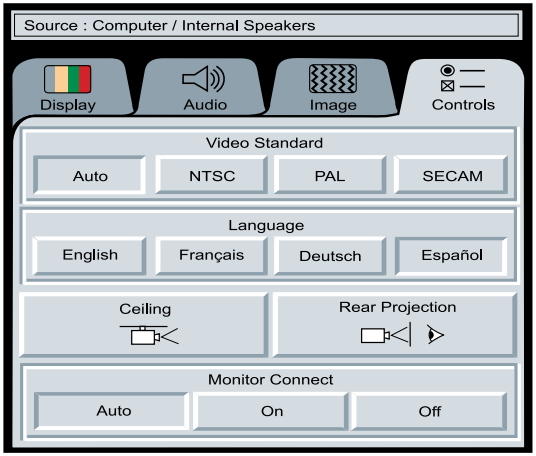

FIGURE 34

Controls menu

Video Standard

When **Auto** is on, the projector attempts to pick the video standard (NTSC, PAL or SECAM) automatically based on the input signal it receives. (The video standard options may vary depending on your region of the world.) If the projector is unable to detect the standard, the colors might not look right or the image might appear "torn." If this happens, manually select NTSC, PAL or SECAM.

NOTE: *If you already know the standard used in your geographical area, it's often best to manually select it.*

Language

You can display the on-screen menus in English, French, German, and Spanish. The default is English.

- Click the button for the language you want. The menus redraw immediately.

Ceiling

- Click either mouse button to turn the image upside down for ceiling-mounted projection.

NOTE: *To order the ceiling mount kit, refer to "Accessories" on page 57.*

Rear Projection

When you select **Rear Projection**, the projector reverses the image so you can project from behind a translucent screen.

- Click either mouse button to reverse the image.

Monitor Connect

When Auto is selected, the projector attempts to pick the correct monitor connection based on the input signal it receives. This setting produces the best results in most situations. Select “On” or “Off” only if the image is very dim or not projected.

- Select “On” if your monitor is connected directly to the CableWizard and the images are excessively dim.
- Select “Off” if your monitor is not connected directly to the CableWizard and the image is not projected. (Some IBM ThinkPad computers exhibit this problem, especially the ThinkPad 760.)

NOTE: *Do not select “Off” if your monitor is connected directly to the CableWizard.*

MAINTENANCE

This section describes how to:

- clean and replace a lens
- install and use the zoom lens
- replace the projection lamp and reset the lamp monitor light
- replace the batteries in the remote control
- replace the fuse
- use the Kensington lock feature

Cleaning the Lens

Follow these steps to clean the projection lens:

1. Apply a non-abrasive camera lens cleaner to a soft, dry cleaning cloth.
   - Avoid using an excessive amount of cleaner.
   - Abrasive cleaners, solvents or other harsh chemicals might scratch the lens.
2. Lightly wipe the cleaning cloth over the lens.
3. If you don't intend to use the projector immediately, replace the lens cap.

Removing and Replacing a Lens

1. Turn the focus ring counterclockwise until it reaches a stop.
2. While holding the lens, squeeze the latch below the lens (Figure 35) and turn the lens counterclockwise again.
3. Gently pull the lens out of the lens bracket.

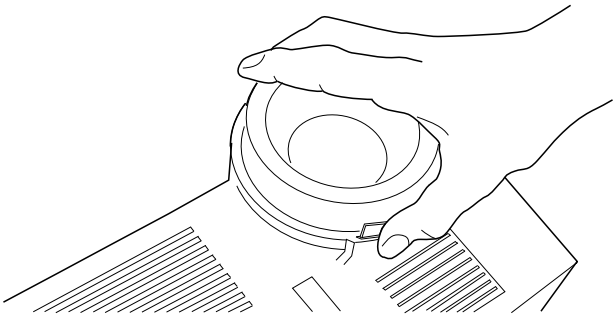

FIGURE 35

Removing the lens

To replace a lens:

1. Make sure the latch is pointing down.
2. Squeeze the latch and gently push the lens in until it stops, then turn the lens clockwise until the catch is engaged.

CAUTION: Be sure to fully retract the zoom lens before you put the lens cap on and pack the projector in its case.

Using the Zoom Lens

The zoom lens enlarges the projected image by 40% without moving the projector. (For more information about image size, see "Projected Image Size" on page 64.) Follow the previous instructions to install the zoom lens.

Follow these steps when operating the zoom lens:

1. Turn the zoom ring (Figure 36) until the projected image is the size you want, even if it is out of focus.
2. Turn the focus ring as needed to clear up the image.

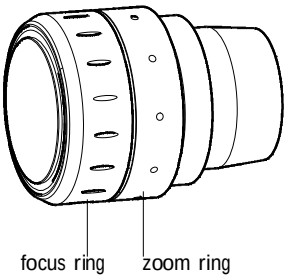

FIGURE 36

LitePro 200 Series zoom lens

Replacing the Projection Lamp

The lamp monitor LED, marked on the connector panel, lights up when 150 hours of lamp life remains. At zero hours, the lamp switches off completely. You can order new lamp modules from your In Focus dealer. See "Accessories" on page 57 for information.

Follow these steps to replace the projection lamp:

1. Turn off the projector and unplug the power cord.
2. Wait 45 minutes to allow it to cool thoroughly.
3. Using a small, flat-blade screwdriver, remove the screw on the outside of the lamp door (Figure 37).
4. Pull the lamp cover up and remove it.

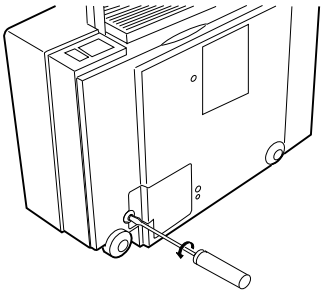

FIGURE 37

Removing the lamp module door

5. Loosen the non-removable screw on the outside of the module.
6. Remove the module (Figure 38).

WARNING: *To avoid burns and lamp explosion, allow the projector to cool for at least 45 minutes before you open the lamp module door. Never extract the lamp module while the lamp is operating.*

CAUTION: *Replace the projection lamp as soon as possible after the lamp monitor light comes on. If the lamp remains in use too long, there is a danger of lamp explosion. If this happens, your projector will be severely damaged.*

CAUTION: *Never operate the projector with the lamp cover open or removed. This disrupts the air flow and causes the projector to overheat.*

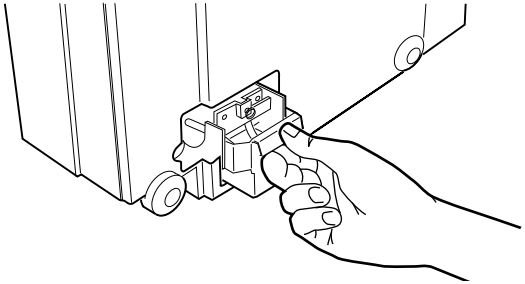

FIGURE 38

Removing the lamp module

7 Align the module in the correct direction.

8 Gently push the module in as far as it goes (Figure 39).

9 Tighten the screw on the outside of the module.

WARNING: *Do not drop the lamp module or touch the glass bulb! The glass may shatter and cause injury.*

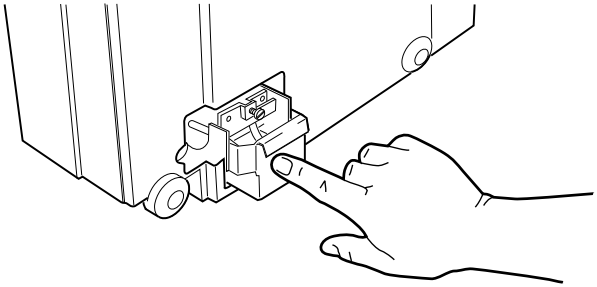

FIGURE 39

Installing a new lamp module

10 Reposition the lamp cover.

11 Replace the screw and tighten it.

12 Turn the projector back on.

Resetting the Lamp Monitor Light

After replacing the lamp, you must reset the lamp monitor light.

1. Press and hold the two **brightness** buttons on the keypad for at least 5 seconds.
2. Release the buttons. The lamp monitor light goes out after it is reset.

NOTE: *You must reset the lamp monitor light so the projector can keep track of the usable life of the new lamp.*

Replacing the Batteries in the Remote Control

The life of the batteries depends on how often and how long you use the remote. Symptoms of low battery charge include erratic responses when using the remote and a reduced range of operation.

Follow these steps to replace the batteries:

1. Turn the remote face down in your hand.
2. Slide the battery cover off the end of the remote by pressing on it with the heel of your hand.
3. Remove the old batteries.
4. Install two new AA alkaline batteries. Make sure you install each in the correct direction.
5. Slide the battery cover back on the remote.

Replacing the Fuse

A power line surge or spike can blow the power supply fuse, causing the projector to stop working. If this happens, you'll need to replace the fuse.

The projector ships with a 6.3 amp fuse. The correct replacement fuse depends on the power line voltage in the country where you are operating the projector.

- If your line voltage is 115V to 240V, use a T6.3AH, 250V, 5x20mm fuse.
- If your line voltage is 100V to 115V (as in Japan), use a T8AH, 250V, 5x20mm fuse. You can order the fuse from your In Focus dealer; the part number is listed on page 58.

CAUTION*: Use only the specified power supply fuse. Using a different fuse may damage the projector.*

After you make sure that the condition that made the fuse blow no longer exists, follow these steps to replace the fuse:

1. Turn off the projector by pressing the “O” side of the power switch.
2. Unplug the power cord.
3. Remove the fuse holder, located just above the power cord connector. Pull out the fuse holder with a small, flat-blade screwdriver, key or coin (Figure 40).

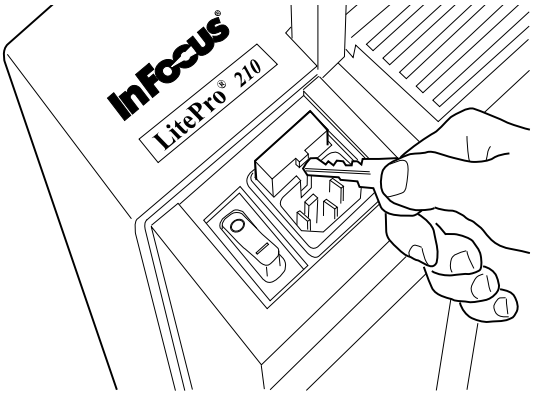

FIGURE 40

Removing the fuse holder

***CAUTION**: The 6.3A IEC 127 type fuse is required in Europe. In countries with low main voltage, you may need the 8.0A fuse to avoid repeated (nuisance) blowing of the 6.3A fuse. Both fuses provide protection from risk of fire. Do not use the projector if repeated blowing still occurs after switching to the 8.0A fuse. Call In Focus Technical Support for assistance.*

4. Remove the blown fuse from the fuse holder (Figure 41).

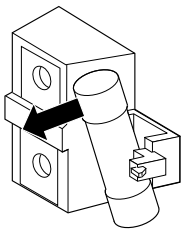

FIGURE 41

Removing the fuse from the fuse holder

5. Push the spare fuse into the holder until it is securely seated.
6. Place the fuse holder back in position (Figure 42).

7 Plug the power cord back in.

8 Press the " | " side of the power switch to turn the projector back on.

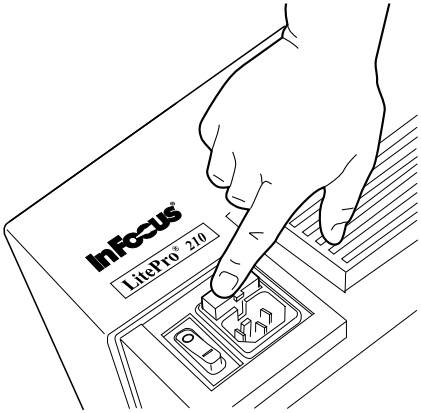

FIGURE 42

Replacing the fuse holder

CAUTION: *A surge-protected power strip is recommended if power surges are common in your area.*

Using the Kensington Lock

The projector has a Kensington Security Standard connector for use with a Kensington MicroSaver Security System (Figure 43). Refer to the information that came with the Kensington System for instructions on how to use it to secure the projector.

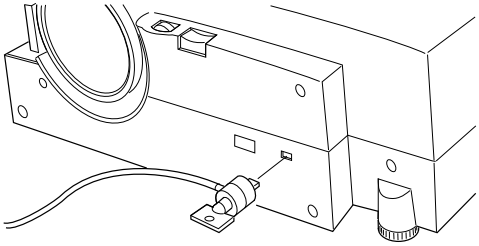

FIGURE 43

Installing the Kensington lock

TROUBLESHOOTING

If you're experiencing trouble with the projector, follow these steps to make sure everything is properly connected before you call Technical Support for assistance.

1. Check cable connections. Verify that all computer, CableWizard and power cables are properly connected.
2. Verify that all power is switched on.
3. Verify that the projector has not been switched off with the **standby** button on the remote or keypad.
4. If the projector still doesn't display an image, restart the computer.
5. If the problem still exists, unplug the projector from the computer and check the computer monitor's display. The maximum resolution that the 210 can display is 800x600 pixels, preferably 640x480; the maximum resolution that the 220 can display is 1024x768 pixels, preferably 800x600. The problem might be with the graphics controller in your computer rather than with the projector. When you reconnect the projector, remember to turn the computer and monitor off before you power up the projector. Power the equipment back up in this order: projector, monitor, computer.
6. If you're using a laptop computer and its monitor is not displaying your presentation, make sure you have re-activated the computer's monitor. Most laptop computers de-activate their own monitor when a second display device, such as the projector, is connected. Refer to page 59 for more information.
7. If the problem still exists, read through the problems and solutions in this chapter.

If you call Technical Support for assistance:

- Find out what kind of graphics controller card is installed in your computer. This is the circuit board in the computer to which the projector is connected. Most PCs use a VGA graphics controller.

NOTE: *Macintosh computers require a specific power-up sequence: the projector must be turned on before you turn on the computer.*

Solutions to Common Problems

Problem: Nothing on projection screen

- Make sure that the power cord is properly connected to a functional AC electrical outlet. Make sure that the power cord is also properly connected to the projector.
- If the projector is plugged into a power strip, make sure the power strip is turned on.
- Make sure you have removed the lens cap on the projection lens at the front of the projector.
- Make sure the projector is switched on.
- Check the projector's lamp to ensure that it is securely connected in the lamp module. See "Replacing the Projection Lamp" on page 43.
- Check the fuse. If it has blown, replace it. See "Replacing the Fuse" on page 45.
- Make sure that the CableWizard and the cables do not have any bent pins. Check the power cord for bent pins also.

Problem: Color or VGA text not being projected

- You might need to adjust the brightness up or down until the text is visible. Refer to "Brightness" on page 29 for more information.
- Verify that the appropriate input source is selected. See "Computer" on page 29 or "Video" on page 31.

Problem: The screen resolution is not right

- Make sure the computer's graphics card is set for a resolution of no greater than 800x600 for the 210, 1024x768 for the 220.

Problem: Image isn't centered on the screen

- Reposition the image. Refer to "Horiz. Position" on page 38 and "Vert. Position" on page 38.
- If you're using an extension cable between the CableWizard and the projector, make sure it's In Focus-approved.

Problem: Only the start-up screen displays

- Verify that the cables are connected correctly. Check to see that the CableWizard computer cable is correctly connected to the monitor connector on the computer (this is the connector where your monitor cable usually goes.) See page 6 through page 15 for connection procedures.
- Verify that the proper input source is connected. See "Computer" on page 29 or "Video" on page 31.
- You might need to turn everything off and power up the equipment again. Make sure you power up in this order: projector, computer monitor, computer. It is especially important that you follow this sequence for Macintosh computers.
- Make sure your computer's graphics board is installed and configured correctly.

  If you're using Windows 3.x:

  1. In the Windows Program Manager, double-click the Windows Setup icon in the Main program group.
  2. Verify that the Display setting is 800x600 or less for the 210, 1024x768 or less for the 220.

  If you're using Windows 95:

  1. Open "My Computer" icon, the Control Panel folder and then the Display icon.
  2. Click the Settings tab.
  3. Verify that the Desktop area is set to 800x600 or less for the 210, 1024x768 or less for the 220.

Also check the following:

- Does your computer have a compatible graphics board? The projector isn't CGA or EGA compatible.
- Is your computer's graphics board turned on? This is especially true for laptop computers. See "Portable and Laptop Activation Chart" on page 59.

Problem: Image is too wide or narrow for screen

- You might need to manually adjust the tracking to reduce or enlarge the projected image. Refer to “Manual Tracking” on page 38.
- Adjust the resolution of your monitor if it’s greater than 800x600 pixels for the 210 or 1024x768 for the 220. Only these resolutions at 75 Hz or less will display on the projector.
- Make sure that your computer has a compatible graphics board. The projector is not compatible with CGA, EGA, or 1280x1024 graphics modes.

Problem: Image is out of focus

- Make sure the lens is locked in place.
- Turn the projection lens to focus the image.
- Make sure the projection screen is at least 4 feet (1.2m) from the projector.
- Check the projection lens to see if it needs cleaning.

Problem: Image and menus are reversed left to right

- Rear projection mode is probably turned on. Switch back to forward projection from the Controls menu. The image should immediately return to forward projection. See “Rear Projection” on page 40.

Problem: Image and menus are upside down

- Ceiling mode is probably turned on. Turn off the mode from the Controls menu. The image should immediately return to forward projection. See “Ceiling” on page 39.

Problem: the projector displays vertical lines, “bleeding” or spots

- Adjust the brightness. See “Brightness” on page 29.
- Check the projection lens to see if it needs cleaning.

Problem: Image is "noisy" or streaked

Try these steps in this order.

1. Deactivate the screen saver on your computer.
2. Turn **Auto Image** off and then back on again. See "Auto Image" on page 37.
3. Adjust the synchronization and tracking manually to find an optimal setting. See "Manual Sync" on page 37 and "Manual Tracking" on page 38.

- If you're using an extension cable between the CableWizard and the projector, make sure it's In Focus-approved.
- The problem could be with your computer's graphics board. If possible, connect another computer with a different graphics board.

Problem: Projected colors don't match the computer or video player's colors

- Adjust the brightness, tint and / or contrast from the Display menu. Just as there are differences in the displays of different monitors, there are often differences between the computer image and the projected image. See "Brightness" on page 29, "Tint" on page 34 and "Contrast" on page 34.

Problem: Lamp seems to be getting dimmer

- The lamp begins to lose brightness when it has been in use for a long time. Replace the lamp as described in "Replacing the Projection Lamp" on page 43.

Problem: Lamp shuts off

- A minor power surge may cause the lamp to shut off. Turn the projector off, wait at least 45 seconds, then turn it back on.

Problem: Remote not operating correctly

- You might need to replace the batteries. See "Replacing the Batteries in the Remote Control" on page 45.
- Make sure you're pointing the remote either at the back or front of the projector, or at the projection screen.
- Make sure the remote is within its operating range of 40 feet.

APPENDIX

Specifications

The LitePro 210 and 220 must be operated and stored within the temperature and humidity ranges specified.

Temperature	
Operating	10 C to 40° C
Non-operating	-20 to 60° C

Humidity	
Operating and non-oper.	10% to 95% relative humidity, non-condensing

Dimensions
6.6 x 16.25 x 13.25 inches (16.8 x 41.3 x 33.7 cm)

Weight
16 lbs. (7.3 kg) unpacked

Altitude	
Operating	0 to 10,000 feet (3048 meters)
Non-operating	20,000 feet (6096 meters)

Left and Right Audio Outputs	
Frequency Response	10 Hz - 20 KHz
Output Impedance	1.2 K ohm nominal
Output Voltage	2 Vrms maximum (open circuit)
Connector Type	red and white RCA jacks

Subwoofer Outputs	
Frequency Response	10 Hz - 10 KHz
Output Impedance	200 ohms nominal
Output Voltage	2 Vrms maximum (open circuit)
Connector Type	black RCA jack

Optics	
Focus Range	4 to 25 feet

Microphone Input

Input Impedance	3.5 K ohm nominal
Maximum Input Voltage	60 mVrms for THD ≤0.3%, main inputs off
Sensitivity	800 Vrms at 1 KHz for 88 dB SPL at 1 meter
Microphone Impedance	< 8K ohms
Connector Type	6.3 mm (1/4 inch) monaural phone jack (unbalanced)

Lamp

Type	270-watt metal halide

Remote Control

Battery	Two (2) AA alkaline cells

Input Power Requirements

100-240VAC, 7.0A-3.6A, 50 to 60 Hz.

Video Module Input

Input Impedance	5K ohm DC coupled
Maximum Input Voltage	$(L_{IN} + R_{IN})_{PEAK}$ < 4.5 V for THD ≤ 0.3%, microphone off L_{IN} or R_{IN} < 2.0 Vrms for THD ≤ 0.3%, microphone off
Sensitivity	100 mV at 1 KHz for 88 dB SPL at 1 meter
Connector Type	RCA jack

CableWizard Audio Input

Input Impedance	10K ohm nominal, AC coupled
Maximum Input Voltage	$(L_{IN} + R_{IN})_{PEAK}$ < 4.5 V for THD ≤ 0.3%, microphone off L_{IN} or R_{IN} < 2.0 Vrms for THD ≤ 0.3%, microphone off
Sensitivity	100 mV at 1 KHz for 88 dB SPL at 1 meter
Connector Type	3.5 mm (1/8 inch) stereo phone jack

Fuse

115 to 240V nominal line	T6.3AH, 250V, 5x20mm
100 to 115V nominal line	T8AH, 250V, 5x20mm

Accessories

Standard Accessories (ship with the projector)	Part Number
LitePro 210/220 Quick Start card	009-0214-xx
LitePro 210/220 User's Guide	010-0102-xx
Shipping Box	110-0098-xx
CableWizard and Cables	591-0182-xx
CableWizard Audio Cable	210-0079-xx
CableWizard Computer Cable	210-0076-xx
CableWizard Mouse Cable	210-0078-xx
Varifocal Lens	505-0148-00
Projection Lamp Module	505-0144-xx
Lens Cap	340-0220-xx
Audio/Video Cable	210-0062-xx
Fuse — 6.3 amp	749-0010-xx
Remote Control with Cable and 2 Batteries	590-0198-xx
Remote Cable (50 ft)	210-0088-xx

Power Cords (one ships with projector, type depends on country)

North American Power Cord	210-0023-xx
Australian Power Cord	210-0027-xx
UK Power Cord	210-0028-xx
European Power Cord	210-0029-xx
Danish Power Cord	210-0030-xx
Swiss Power Cord	210-0031-xx

Optional Accessories

Soft Carry Case	CA-C077
ATA Shipping Case	CA-C119
CableWizard Lite	SP-CWLITE
Mac Adapter for CableWizard Lite	516-0003-xx
CableWizard Extension Cable, 50 ft*	210-0077-xx
Zoom Lens	HW-LP210-ZM
Kensington MicroSaver Security System	SP-KENLOC
JBL Satellite Speakers	591-0203-xx
JBL Subwoofer	591-0204-xx
S-Video Cable	515-0027-xx
Microphone	591-0201-xx
Fuse — 8.0 amp	call for part no.
LitePro 200 Series Ceiling Mount Kit*	591-0208-xx
1 Year Extended Warranty	592-0320-xx
2 Year Extended Warranty	592-0319-xx

*Using the extension cable or ceiling mount reduces FCC and EMC compliance to Class A.

Portable and Laptop Activation Chart

Computer	Key command to activate port	Key command to de-activate port
Acer	Ctrl-Alt-Esc (for setup)	Ctrl-Alt-Esc (for setup)
AST* **	FN-D or Ctrl-D Ctrl-FN-D FN-F5 type from A:/IVGA/CRT FN-F12	FN-D or Ctrl-D Ctrl-FN-D FN-F5 type from A:/IVGA/CRT FN-F12
Advanced Logic Research	Ctrl-Alt-V	Ctrl-Alt-V
Altima	Shift-Ctrl-Alt-C setup VGA/ Conf.Simulscan	Shift-Ctrl-Alt-L setup VGA/ Conf.Simulscan
Ambra**	FN-F12 FN-F5 F2/Choose Option/F5	FN-F12 FN-F5 F2/Choose Option/F5
Amrel* **	setup menu Shift-Ctrl-D	setup menu Shift-Ctrl-D
Apple	see Mac Portable and Mac PowerBook	
Aspen	automatic	automatic
BCC*	automatic	reboot computer
Bondwell	LCD or CRT options after bootup	reboot for LCD or CRT options to appear
Chaplet**	setup screen FN-F6 FN-F4	setup screen FN-F6 FN-F4
Commax	Ctrl-Alt-#6	Ctrl-Alt-#5

NOTE: *Most laptop computers de-activate their built-in monitors when a second display device is connected. The following chart lists the commands that re-activate the laptop's monitor. If your computer is not listed, refer to the computer's documentation.*

Computer	Key command to activate port	Key command to de-activate port
Compaq* **	Ctrl-Alt-<	Ctrl-Alt->
	FN-F4	FN-F4
	automatic	automatic
	mode/? (for setup option)	mode/? (for setup option)
Compuadd* **	automatic	automatic
	Alt-F for screen setup option	Alt-F for screen setup option
Data General	Ctrl-Alt-Command	Ctrl-Alt-Command
Data General Walkabout	2 CRT/X at DOS prompt	reboot
Datavue	Ctrl-Shift-M	Ctrl-Shift-M
Dell**	Ctrl-Alt-<	Ctrl-Alt->
	Ctrl-Alt-F10	Ctrl-Alt-F10
	FN-F8 (CRT/LCD)	FN-F8
	FN-D	FN-D
	FN-F12	FN-F12
Digital*	automatic	reboot
	FN-F2	FN-F2
Dolch	dip switch to CRT	dip switch to LCD
Epson	dip switch to CRT	dip switch to LCD
Everex*	setup screen option	setup screen option
For-A	Ctrl-Alt-Shift-C	Ctrl-Shift-Alt-L
Gateway	FN-F1/FN-F1 again simultaneous	FN-F1
Grid* **	FN-F2, choose auto or simultaneous	FN-F2
	Ctrl-Alt-Tab	Ctrl-Alt-Tab
Hyundai	setup screen option	setup screen option
IBM 970*	automatic	warm reboot

Computer	Key command to activate port	Key command to de-activate port
IBM ThinkPad**	reboot, enter setup menu	FN-F2
	FN-F7, select choice from setup menu	
	FN-F1, select choice	
	FN-F5, select choice	
	PS/2 SC select choice (CRT, LCD, etc.)	
Kaypro	boot up, monitor plugged in	unplug monitor
Kris Tech	FN-F8	FN-F8
Mac Portable 100	no video port: not compatible	
Mac PowerBook		
140, 145, 150, 170	no video port: requires a 3rd-party interface	
160, 165, 180, 520, 540, 5300	Control Panel folder, PowerBook Display folder; Activate Video Mirroring	warm reboot
210, 230, 250, 270, 280, 2300	requires Apple Docking Station or Mini Dock	
Magitronic	FN-F4	FN-F4
Mastersport	FN-F2	FN-F1
Micro Express*	automatic	warm reboot
Microslate*	automatic	warm reboot
Mitsubishi	SW2 On-Off-Off-Off	SW2 Off-On-On-On
NCR	setup screen option	setup screen option
NEC* **	setup screen option	setup screen option
	CRT at the DOS prompt	LCD at the DOS prompt
	FN-F31	FN-F3
Olivetti*	automatic	automatic
	FN-O/*	FN-O/*
	FN- | |	FN- | |

Computer	Key command to activate port	Key command to de-activate port
Packard Bell**	FN-F2 Ctrl-Alt-<	FN-F2 Ctrl-Alt->
Panasonic	FN-F2	FN-F2
Samsung*	setup screen option	setup screen option
Sanyo	setup screen option	setup screen option
Sharp	dip switch to CRT	dip switch to LCD
Sun SPARC-Dataview	Ctrl-Shift-M	Ctrl-Shift-M
Tandy**	Ctrl-Alt-Insert setup screen option	Ctrl-Alt-Insert setup screen option
Texas Instruments*	setup screen option	setup screen option
Top-Link* **	setup screen option FN-F6	setup screen option FN-F6
Toshiba* **	Ctrl-Alt-End FN-End FN-F5 setup screen option	Ctrl-Alt-Home FN-Home FN-F5 setup screen option
Twinhead*	FN-F7 FN-F5 Automatic	FN-F7 FN-F5 Automatic
WinBook	Ctrl-Alt-F10	Ctrl-Alt-F10
Wyse	software driven	software driven
Zenith**	FN-F10 FN-F2 FN-F1	FN-F10 FN-F2 FN-F1

* These manufacturers have models that automatically send video to the external CRT port when some type of display device is attached.

** These manufacturers offer more than one key command depending on the computer model.

Using Video Mirroring with a PowerBook Computer

When you turn video mirroring on, the projector displays the same information that appears on your PowerBook's built-in screen. When video mirroring is off, the projector acts like a separate display.

To turn on video mirroring for the first time:

1. Open the Monitors control panel; click on Monitor 2.
2. Set the number of colors you want.
3. Open the Control Strip; click on the monitor icon.
4. Select "Turn Video Mirroring On."

Now you can turn video mirroring on and off from the Control Strip without having to open the Monitors control panel again.

When using video mirroring and high color graphics such as slide shows, the projected image occasionally might turn black and white. If this happens, perform the following steps:

1. Turn off video mirroring.
2. Open the Monitors control panel.
3. Move the white menu bar to Monitor 2 to set the projector as the primary monitor.
4. Restart the PowerBook.

Projected Image Size

Use the chart below and the tables on the next page to help you determine projected image sizes for the varifocal and zoom lenses.

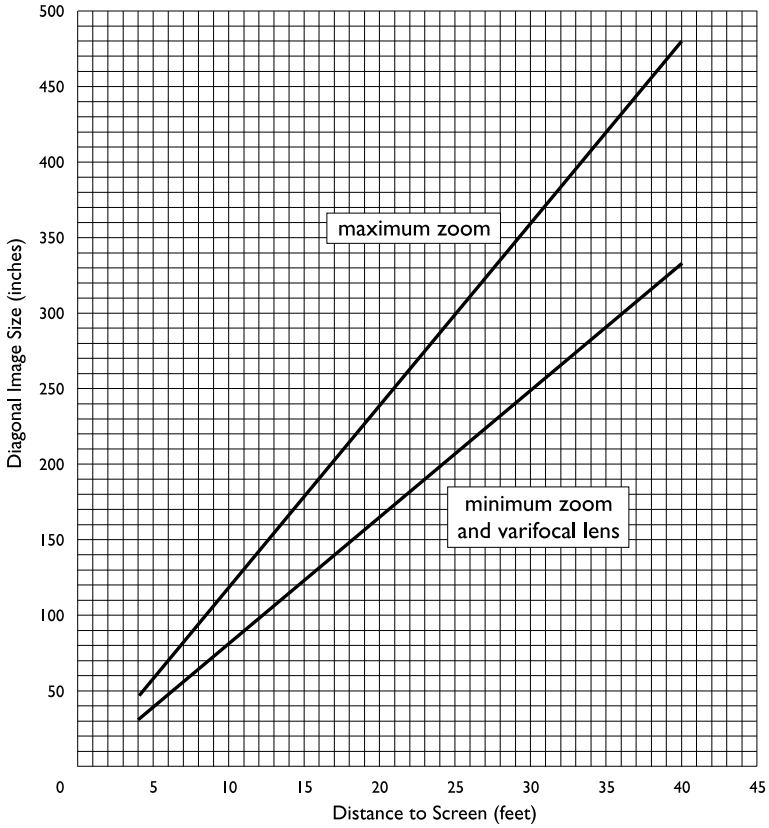

FIGURE 44

Projected image size for LitePro 200 series zoom and varifocal lenses

Table 1:
Image Size, Width and Height for Varifocal Lens and Zoom Lens at Minimum Focusing Distance

Distance to Screen (feet)	Diagonal (inches)	Width (inches)	Height (inches)
4	34	27	20.4
10	84	67	50.4
15	126	101	75.6
20	168	134	100.8
25	210	168	126.
30	252	202	151.2
35	294	235	176.4
40	336	269	201.6

Table 2:
Image Size, Width and Height for Zoom Lens at Maximum Focusing* Distance

Distance to Screen (feet)	Maximum Diagonal (inches)	Maximum Width (inches)	Maximum Height (inches)
4	48	38	28.8
10	120	96	72
15	180	144	108
20	240	192	144
25	300	240	180
30	360	288	216
35	420	336	252
40	480	384	288

* The focusing distance of the zoom lens is from 4 feet to infinity.