USA's primary source for projector lamps
myprojectorlamps

PROJECTOR OWNER'S MANUAL

Boxlight

CD-726C

Need a replacement lamp for this projector?

www.myprojectorlamps.com

Original manufacturer manual, provided unmodified as a courtesy of MyProjectorLamps.com.
All trademarks belong to their respective owners.

Table of Contents

1. Introduction 2
2. Features 2
3. Operation Notice 3
4. Projector Components 4
4.1 Control Panel 4
5. Accessories 7
5.1 Remote Control 8
5.2 Remote Control Functions 9
6. Operation guide 11
6.1 Connecting component 11
6.2 Connecting the projector to a computer 12
6.3 Connecting the projector to a Video Source 12
6.4 Turning on the projector 13
6.5 Basic Image Adjustment 13
6.6 Turning off the projector 13
6.7 Adjusting the projected image height 14
6.8 Adjusting the image focus and zoom 15
7. OSD menu 16
7.1 Image (Computer mode) 16
7.2 Image (Video mode) 17
7.3 Display (Computer mode) 18
7.4 Display (Video mode) 20
7.5 Audio 22
7.6 Management 23
7.7 Language 24
8. Maintenance and service 25
8.1 Replacing the lamp module 25
8.2 Cleaning the projector lens 26
9. Appendix 27
9.1 Common problems and solutions 27
9.2 Distance ratio of screen and projector 29
9.3 Specifications 30

1. Introduction

Please read this manual carefully before using, to find out:

- ◆ How to use the projector safely
- ◆ How to use the remote control
- ◆ How to set up and connect the projector
- ◆ How to start and turn off the projector
- ◆ How to use the On-screen display (OSD) menus
- ◆ How to replace the lamp module
- ◆ How to troubleshoot common problems

2. Features

- ◆ TI 0.7”/ 0.6” DLP™ DMD Chip.
- ◆ Full-function remote including remote mouse control.
- ◆ High quality manual zoom lens.
- ◆ Weighs only 7.5 pounds with a beautifully designed case.
- ◆ Expandable module design, compact and lightweight.
- ◆ High brightness/high contrast. Clear images.
- ◆ Adjustable screen aspect ratio (4:3 / 16:9).
- ◆ NTSC, PAL, P- Scan (480P), & HDTV (1080i / 720P) compatible.
- ◆ Multilingual OSD (on screen display) Menus.

3. Operation Notice:

Please read and follow the following safety instructions carefully. Improper operation may result in fire, electrical shock, personal injury, or projector damage.

Warning: Do not cover the lens while the lamp is lit.

Warning: To prevent eye injury, do not look directly into the projector lens.

Warning: Make sure that you provide adequate ventilation for the projector. Do not block the ventilation holes in the case

Warning: To prevent electrical shock, never open the projector case.

Warning: Before using, please make sure that the power cord is connected to an AC receptacle with a protective safety ground terminal.

Warning: Before replacing the lamp, turn the projector off and unplug the power cord. To avoid burns, wait 1 hr before opening the lamp door. Refer to page 24 for lamp replacement instructions.

Warning: Always use the power cord provided, and a receptacle with a protective safety ground terminal.

Warning: Do not place any drinks on top of your projector. Spilled liquids may damage the projector.

Warning: Do not place the projector on a hot surface, moisture or in direct sunlight.

Warning: Handle carefully during transportation. Avoid dropping the projector.

4. Projector Components

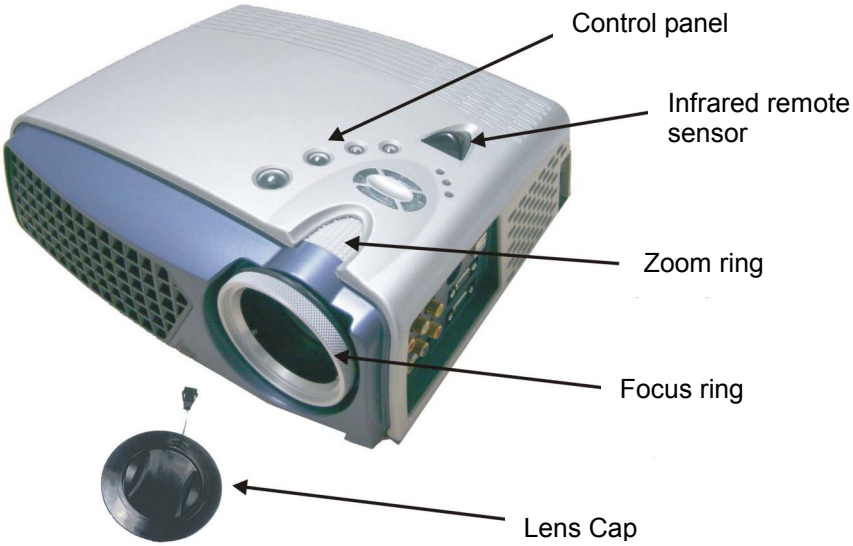

4.1 Control Panel:

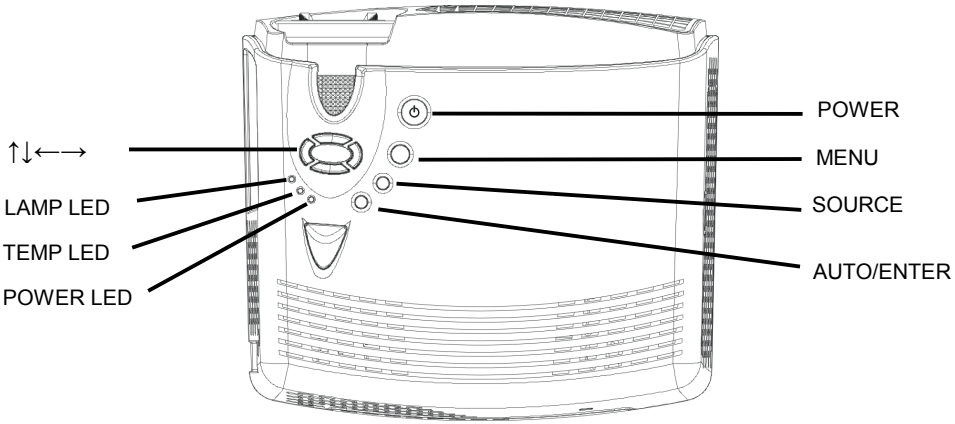

Power LED (Indicator light)

- When power is applied to the projector, the Power LED blinks. Press the Power button to turn the projector on. When the projector is on, the Power LED is lit constantly.

Temp LED (Indicator light)

- When there is a fan malfunction, a fan error message is displayed on the screen, the Temp LED lights and the projector shuts down.
- When the projector internal temperature is too high, a temperature error message is displayed, the Temp LED blinks and the projector shuts down.

Lamp LED (Indicator light)

- Lamp LED will turn on automatically when lamp is on. Lamp LED will turn off automatically when the lamp is off.

Power ⏻ (On/Standby)

- Turns the projector power off and on.
- Refer to “Starting and turning off the projector” on Page 13.

Menu (OSD menu)

- Press to display or hide the OSD menu.
- The OSD menu closes automatically after 20 sec of inactivity.

Source (Signal source)

- Steps through the input sources in the following order: Analog RGB, Analog Y Pb Pr, Digital RGB, Composite Video, S-Video and Component Video.

Auto/Enter (confirm/Sync)

- When using the OSD menu, this button is used to select menu functions.
- When the OSD menu is not displayed, this button activates the Sync function.

↑ ↓ (Up and down button)

・When using the OSD menu, these buttons are used to move between menu options.
・When the OSD menu is not displayed, these buttons select the video input source.

← →(Left and right button)

・These buttons are used to adjust values in the OSD menus.

5. Accessories

When unpacking the projector, make sure you have all of the accessories shown below. If any of the accessories are missing or damaged, contact your dealer or Boxlight Technical Support.

Projector lens cap

power cord

Component Video cable

Composite Video cable

PC Audio in/out cable

S-Video cable

VGA cable

USB cable

Carry bag

VGA－RCA cable

DVI cable

remote control & 2 AAA batteries

5.1 Remote Control

The infrared remote control sensor is located on the top of the projector. For best results, the distance between the sensor and remote control should not exceed 10 meters.

Inserting batteries into the remote control:

1) Remove the battery compartment cover.
2) Insert two AAA batteries into the battery compartment. Ensure the batteries are aligned correctly.
3) Replace the battery compartment cover.

∗Using the remote control

5.2 Remote Control Functions:

Function key	Function description
Freeze/Esc/L	• OSD inactive: freezes the image. Press again to exit freeze mode. • OSD active: exits the selected function. • Mouse mode: Use as the left mouse button.
Enter/R	• When using the OSD menu, this button is used to select menu functions. • When the OSD menu is not displayed, this button activates the Sync function. • Mouse mode: Use as the right mouse button.
Power ⏻	• Turns the projector on and off. Refer to “Turning on and turning off the projector” on page 13.
Mode	• Toggles the remote between mouse and normal modes. When the Mode LED is green, the remote control is in mouse mode and will control the computer mouse functions. • If no buttons are pressed for 15 sec, the remote control will return to normal mode automatically. ☞ You must have a USB cable connected between your computer and the projector to use this option.
Menu	• • Displays or hides the OSD menu. • The OSD menu closes automatically after 20 sec of inactivity.
Source	• Steps through the input sources in the following order: Analog RGB, Analog Y Pb Pr, Digital RGB, Composite Video, S-Video and Component Video.
Blank	• Displays a blank, blue screen.
Auto	• Automatically adjusts the picture position and frequency settings to match the current input.
Pg.Up ⊕	• Enlarge the current image (zoom in)*. • Mouse mode: Sends a Page Up command to the computer.
Pg.Dn ⊖	• Reduce the current image (zoom out)*. • Mouse active: Sends a Page Down command to the computer.

⏢	• Activates keystone adjustment mode.Press the right and left buttons to adjust the shape of the image*. • Press ← button to correct a display that is wider at the bottom than the top. • Press → button to correct a display that is wider at the top than the bottom. ☞ Using the keystone adjustments can cause distortion to text or fine image details.
↑ ↓ ← →	• Normal mode: The same as the Up, Down, Left, Right control buttons on the panel*. • Mouse mode: Move the mouse cursor Up, Down, Left, or Right.

*Press “Auto” to return these settings to their previous values.

6. Operation guide

6.1 Connecting components

You can connect the projector to a computer, DVD player, VCR, or other video source. To connect the projector to a DVD player or VCR, go to “Connecting to a Video Source” on page 12.

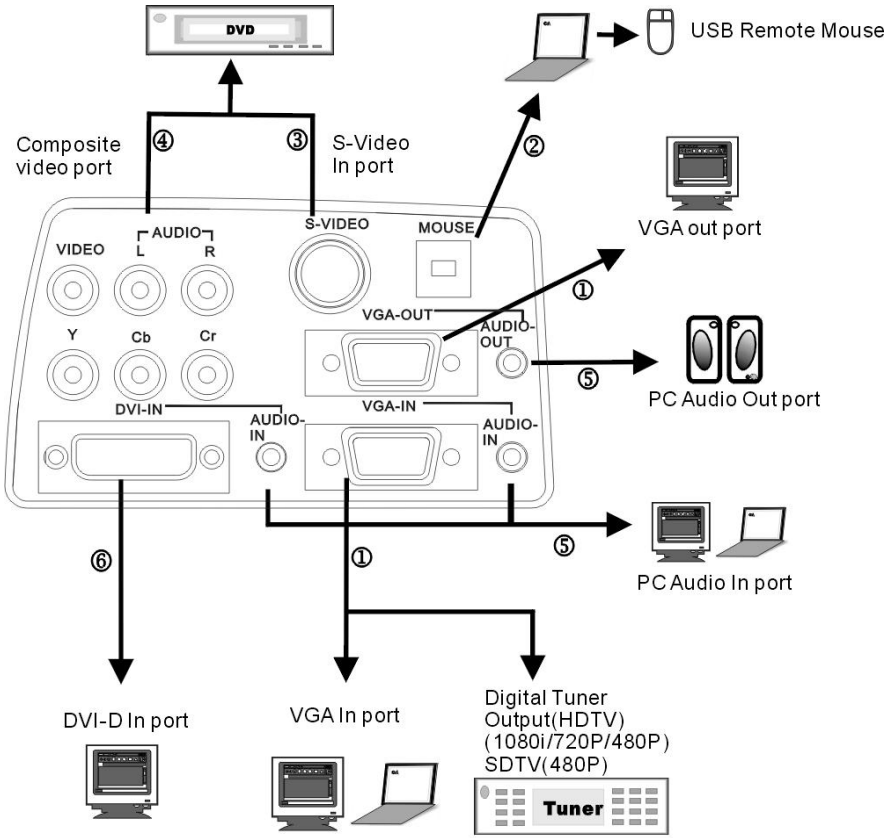

1. VGA In/Out port
2. USB In port
3. S-Video In port
4. Composite Video port
5. PC Audio In/Out In port
6. DVI-D In port

6.2 Connecting the projector to a computer

1) Plug the VGA cable into the VGA port at the left side of projector then plug the other end of VGA cable into the computer.

Note: If you are connecting to a notebook, you may need to make adjustments to the notebook's display settings first. Please refer to the user's guide that came with your notebook.

2) If you want to use the remote control as a mouse, plug the USB cable into the USB port at the left side of projector, then plug the other end into the computer.
3) If your presentation contains audio, plug the PC Audio in/out cable into the Audio In port at the left side of projector, then plug the other end into the computer.
4) Turn on the projector first, then the computer.

6.3 Connecting the projector to a Video Source

If you are using a composite video source, refer to the following:
1) Plug the yellow, red, and white RCA connectors separately into the appropriately colored port at the left side of projector.
2) Plug the yellow, red, and white connectors on the other end into the corresponding ports on the Video Source.

If you are using an S-video source, refer to the following:
1) Plug the S-Video cable connector into the S-Video port at the left side of projector then plug the other end into the Video Source.
2) Plug the red and white connectors from the composite video cable into the corresponding ports at the left side of projector, then plug the other end into the corresponding ports on the Video Source.

Note: When you are using the S-Video cable along with the A/V cable, do not plug in the A/V cable's yellow connector.

After you have connected all of the components to the projector, you are ready to begin using the projector.

6.4 Turning on the projector:

1) Remove the lens cap.
2) Ensure the cable connectors are connected properly.
3) Plug in the power cord, set the main switch (located above the power cord socket) to “1”. The Power LED blinks steadily and slowly.
4) Press the “Power” button on the remote control or control panel to turn on the projector, the Power LED lights steady blue and the Lamp LED lights steady green.
5) A 30 second countdown will be displayed, after the countdown the projector will automatically detect and display the input source. Press the "Power" button one time to bypass the 30 second warm up period.
6) If the screen displays “No signal”, ensure the proper source is selected and the cables are properly connected.
7) To ensure the best possible image performance, press “AUTO/ENTER” after the source is displayed.

Note: If you try to turn on the projector when the internal temperature is too high, the Lamp LED will blink rapidly and the projector will automatically enter cool down mode for 8 seconds. During the cool down sequence, the projector will not light the lamp or respond to remote control or control panel inputs.

6.5 Basic image adjustment

1) Power up your equipment in the right order and point the projector at the screen.
2) Rotate the zoom ring to adjust the image size.
3) Rotate the focus ring to adjust the image focus.
4) Use the tilt foot to adjust the image height.
5) Use the control panel or remote control to adjust the horizontal and vertical position of the image or to adjust the keystone correction.
6) Use the OSD menu to adjust the brightness, contrast and color of the image.

6.6 Turning off the projector

1) Press Power and the “Press Power again to turn off the lamp!” message appears.
2) Press “Power” again to turn off the projector (the message will disappear automatically after 5 sec if the power button is not pressed again).
3) The lamp turns off and the Power LED indicator blinks rapidly. The fans continue to run for 60 seconds to cool down the projection lamp. During this cool down sequence the projector will not respond to any user input.
4) When the fans stop and the Power LED starts flashing slowly, you can either turn the projector back on or set the power switch to “o” and disconnect the power cord.

Note: To extend the lamp life-span, please do not unplug the power cord immediately after the lamp is turned off. Please allow at least 120 sec for the fan to stop, and then you can unplug the power cord.

6.7 Adjusting the projected image height.

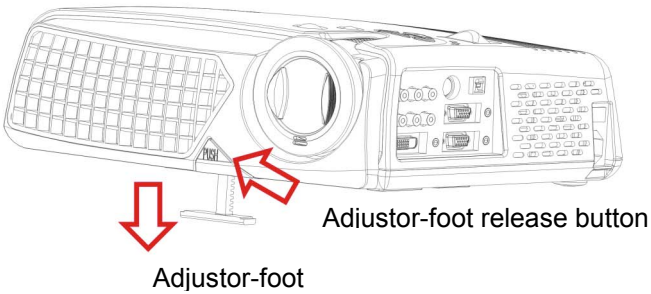

To adjust the angle of the projector

<u>To raise the projector</u>

1. Press and hold the Adjustor-foot release button.
2. Raise the projector to the height you want, then release the button to lock the foot into position.

To lower the projector

1. Press and hold the Adjustor-foot release button.
2. Lower the projector to the height you want, then release the button to lock the foot into position.

6.8 Adjusting the image focus and zoom

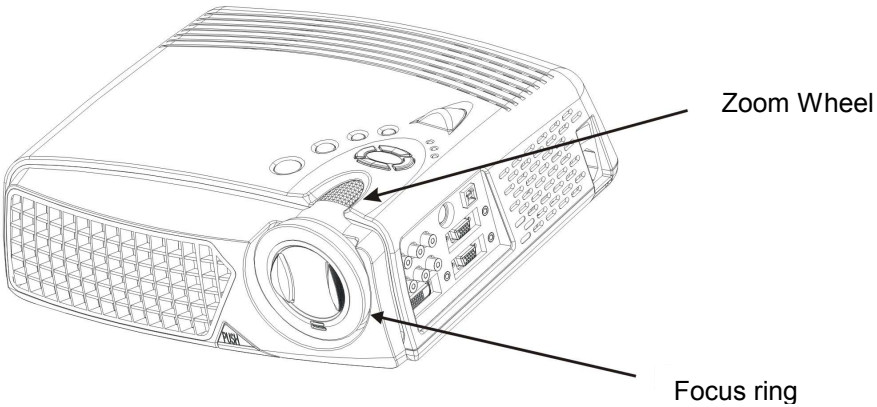

Adjust the zoom ring to enlarge or reduce the image size. Rotate counterclockwise to enlarge the image. Rotate clockwise to reduce the image. To adjust the focus, rotate the focus ring to obtain the best focus. The focus distance of this projector is 1.4~12 meter(3.9~39ft).

7. OSD Menu

Press “Menu” to open the menu. Press up or down to choose the OSD options or press Esc to exit. To enter a submenu, press “Auto/Enter” or the right mouse button. Under the submenu, press “Menu” or Esc on the remote control to return to the main Menu screen or double click to exit the OSD menu.

7.1 Image (Computer mode)

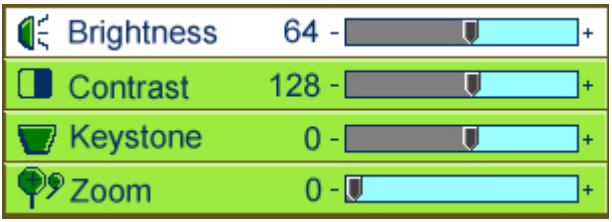

Submenu options	Description	Operation method
Brightness (**)	Adjusts the overall brightness of the image	• Press← to reduce the brightness of the image. • Press→ to increase the brightness of the image. (*)
Contrast	Adjusts the contrast of the image.	• Press← to reduce the contrast of the image. • Press→ to increase the contrast of the image. (*)
Keystone	Corrects an image that is wider at the top or at the bottom.	• Press← to correct an image that is wider at the bottom. • Press→ to correct an image that is wider at the top. (*)
Zoom	Enlarges or reduces a portion of the image.	• Press← to reduce the zoom. • Press→ to enlarge the zoom. (*) ➢ Please press Auto/Enter button to enter zoom mode. Inthis mode, press←→ to move the image, press Pg Up and Pg Dn on the remote control to adjust the image size.

* Press “Auto” button to return to previous setting value.

**If the source is switched to HDTV/DVD 480P, “Brightness” becomes “Tint” which adjusts the balance between red and blue in the image.

7.2 Image (Video mode)

User Menu – Normal

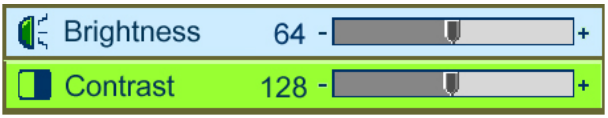

User Menu –Advanced

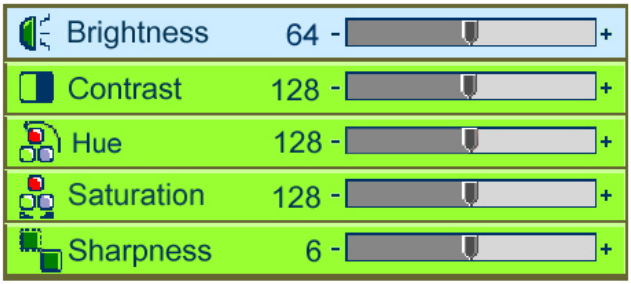

Note: Advanced and Normal functions are set up in Management/User Menu (p.23).

Submenu options	Description	Operation method
Brightness	Adjusts the overall brightness of the image	• Press←to reduce the brightness of the image. • Press→ to increase the brightness of the image. (*)
Contrast	Adjusts the contrast of the image.	• Press←to reduce the contrast of the image. • Press→ to increase the contrast of the image. (*)
Hue	Adjusts the balance between red and green in the image.	• Press← to increase the amount of green. • Press→ to increase the amount of red. (*)
Saturation	Changes the image from black and white to color.	• Press← to reduce the color saturation. • Press→ to increase the color saturation level. (*)
Sharpness	Adjusts the sharpness of the image.	• Press←to make the image softer. • Press→to make the image sharper. (*)

* Press “Auto” to return the setting to the previous value.

7.3 Display (Computer mode)

User Menu – Normal

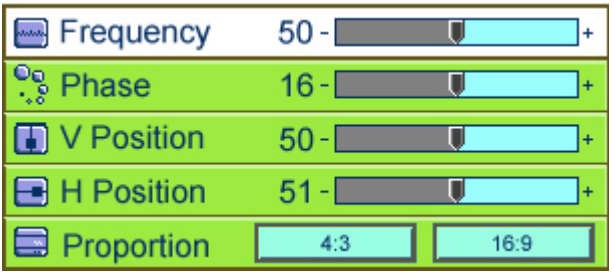

User Menu – Advanced

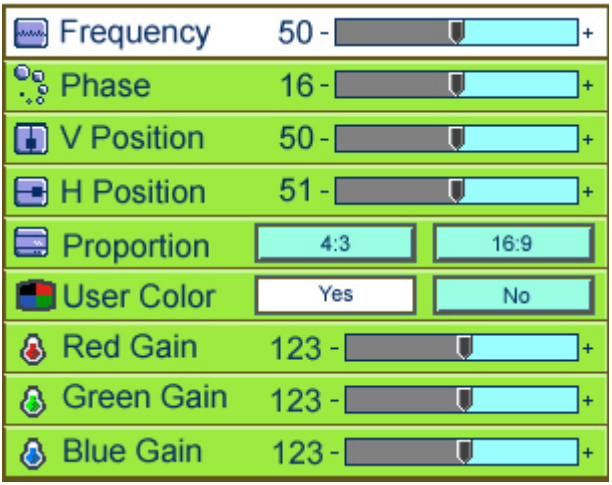

Submenu options	Description	Operation method
Frequency	Minimizes vertical bars or stripes visible on the screen background.	• Press← → to adjust (*).
Phase	Removes horizontal distortion and clears or sharpens characters.	• Press ← → to adjust(*).
V position	Adjusts the display image position up and down.	• Press← to move the image down. • Press→ to move the image up. (*)

H position	Adjusts the image position left and right.	• Press← to move the image to the left. • Press→ to move the image to the right. (*)
Proportion	Switches between 4:3 and 16:9 screen ratio.	• Press ← → to choose.
User Color	Activates individual red, green, or blue color correction controls.	• Choose Yes, and the user red, user green, and user blue adjustments are displayed. • Choose No the user adjustments are hidden.
Red Gain	Adjusts the red color level.	• Press← to reduce the red color level. • Press→ to increase the red color level. (*)
Green Gain	Adjusts the green color level.	• Press← to reduce the green color level. • Press→ to increase the green color level. (*)
Blue Gain	Adjusts the blue color level.	• Press← to reduce the blue color level. • Press→ to increase the blue color level. (*)
Color temperature	Adjusts the red or blue tint of the image.	• Press← to reduce the color temperature, and make the image appear warmer (more red). • Press→ to increase the color temperature, and make the image appear cooler (more blue). (*)

* Press “Auto” to return to previous setting.

7.4 Display (Video mode)

User Menu – Normal

User Menu –Advanced

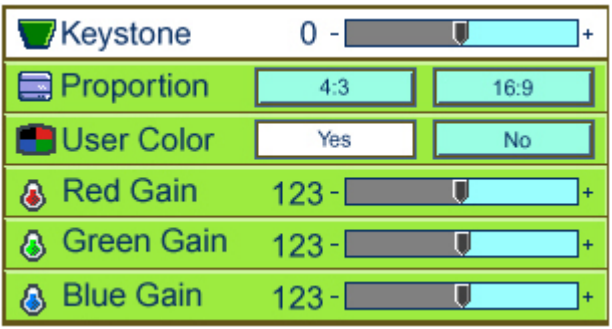

Submenu options	Description	Operation method
Keystone	Corrects an image that is wider at the top or at the bottom.	• Press← to correct an image that is wider at the bottom than the top. • Press→ to correct an image that is wider at the top than the bottom. (*)
Proportion	Switches between 4:3 and 16:9 screen ratios.	• Press ← → to change.
User Color	Activates individual red, green, or blue color correction controls.	• Choose Yes, and the user red, user green, and user blue adjustments are displayed. • Choose No, the user adjustments are hidden.

Red Gain	Adjusts the red color level.	• Press← to reduce the red color level. • Press→ to increase the red color level. (*)
Green Gain	Adjusts the green color level.	• Press← to reduce the green color level. • Press→ to increase the green color level. (*)
Blue Gain	Adjusts the blue color level.	• Press← to reduce the blue color level. • Press→ to increase the blue color level. (*)
Color temperature	Adjusts the red or blue tint of the image.	• Press← to reduce the color temperature, and make the image appear warmer (more red). • Press→ to increase the color temperature, and make the image appear cooler (more blue). (*)

* Press “Auto” to return to previous setting.

7.5 Audio

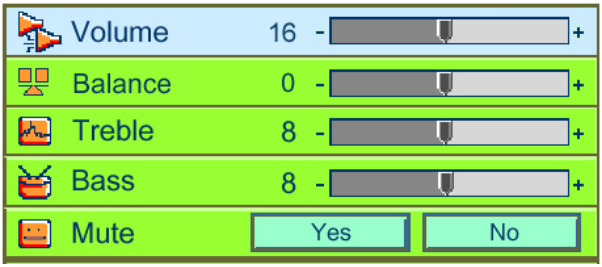

Submenu options	Description or operation method
Volume	• Press← to decrease the volume. • Press→ to increase the volume. (*)
Balance	• Press← to decrease the volume of the left speaker. • Press→ to increase the volume of the right speaker. (*)
Treble	• Press← to decrease the treble • Press→ to increase the treble. (*)
Bass	• Press← to weaken the bass. • Press→ to enhance the bass. (*)
Mute	• Choose “Yes” to mute.

* Press “Auto” button to return to previous setting.

7.6 Management

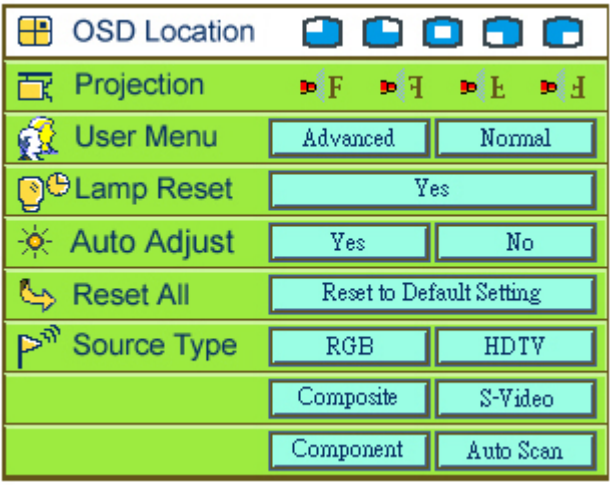

Submenu options	Description	Operation method
OSD location	Adjusts the position of the OSD within the image.	• Press← → to select (*).
Projection	**(Projector in front of the screen)** Default **(Projector behind the screen)** Flips the display image so it can be viewed correctly when the projector is set up for rear screen projection. **(Projector ceiling-mounted)** Flips the display image so it can be viewed correctly when the projector is ceiling-mounted.	• Press← → to select (*).
User Menu	There are two types of functions , Advanced and Normal, for users to choose.	• Press← → to select (*).

Lamp Reset	Resets the lamp timer.	• Press right, and the “Press Auto/Enter button, reset the lamp timer” message will be displayed, press “Auto/Enter” to reset the timer. Press “Menu” or “Esc” on the remote control to exit without resetting the timer.
Auto Adjust	Automatically adjusts the display settings to the ideal settings for the display source.	• Select Yes, and the brightness and contrast value will be adjusted automatically each time you press “Auto” button. • Select No, the brightness and contrast value is fixed and unchanged.
Reset All	Returns all settings to the factory defaults.	• Press right button.
Source type	Switches between available video input sources.	• Press← → button to choose.

* Press “Auto” to return to previous setting.

7.7 Language

Changes the language of the OSD menu. Choose between English, German, French, Italian, Spanish, Portuguese, Japanese, Traditional, Chinese, and Simple Chinese.

8. Maintenance and service

Change the lamp module immediately when the lamp life reaches 1500 hrs to maintain the best projection image.

8.1 Replacing the lamp module

When the lamp is within 30 hours of maximum lamp life, the projector will display the “Lamp has reached its end of life! Lamp replacement is suggested!” warning. When this message appears, change the lamp.

To replace the lamp module:

1. Turn off the projector and wait for the fan to stop.
2. Turn off the main power switch, and disconnect the power cord and all cables.
3. Let the projector lamp cool down completely (approximately 30 minutes).
4. Use a screwdriver to loosen the screws of lamp door and lamp module.
5. Take out the lamp module.
6. Gently insert the new lamp module into the lamp bay, replace the lamp module retaining screws.
7. Replace the lamp door, and tighten the door screw.
8. Reset the lamp timer using the Lamp Reset function in the Management menu.

Use a screwdriver to loosen the lamp door, and press down the lock to remove the door.

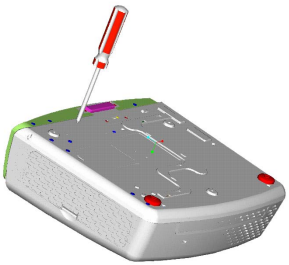

Remove the three lamp module retaining screws, unsnap the lamp removal handle to change the lamp module.

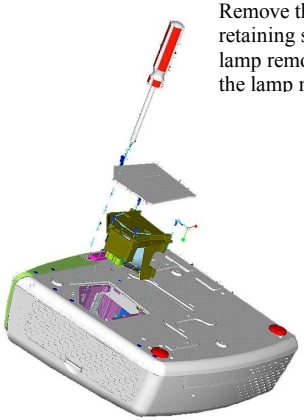

8.2 Cleaning the projector lens

Follow this procedure to clean the projector lens:

1. Use a small amount of cleaner on a clean soft cloth. Do not use abrasive cleaners, solvents, or other chemicals, they may cause damage to the projector lens.
2. After cleaning and while the projector is not being used, place the lens cap on the lens to protect the lens.

9. Appendix

9.1 Common problems and solutions

When you encounter problems while using the projector, refer to the following troubleshooting tips:
If you are unable to correct the problem, contact your dealer or Boxlight Technical Support.

■ No image on the screen

⇨Make sure that all components are connected correctly.
⇨Make sure the power cord is not damaged.
⇨Make sure the main switch of the projector is turned on.
⇨Ensure the lamp is securely installed.
⇨Make sure the lens cap is removed.

■ The screen resolution is not right

⇨ Make sure the computer resolution is not set higher than 1280 X 1024.

■ Display image is instable or flashing

⇨Press the “Auto” button on the remote control or the Auto/Enter button on the projector.
⇨Adjust the “Phase” setting in the “Display” menu.
⇨Change the color setting of on your computer.

■ Image has vertical flashing stripes or bars.

⇨Press the “Auto” button on the remote control or the Auto/Enter button on the projector.
⇨ Adjust the “Frequency” setting in the “Display” menu.
⇨Check the display mode of your display .

■ The image is blurry

⇨Adjust the focus ring on the projector.
⇨Make sure the projection screen is 1.4 ~12 meters (3.9 ~ 39 ft) from the projector.

■ Projected colors don't match the computer or video player's colors

⇨This is a normal phenomenon; adjust the brightness, color or contrast value in the menu.

■ When the projector is connected to a DVD player, and the film aspect ratio is 16:9, the display image is distorted.

⇨Adjust the image proportion of projector into 4:3.

■ Image is reversed

⇨Open the Menu, and then choose "Projection setting" option to adjust the projection method.

■ Lamp is burned or cracking sound happens.

⇨When the lamp has reached its end of life, it may burn out and shatter. Contact your dealer or Boxlight to buy a replacement lamp module.

9.2 The distance proportion between screen and projector (Based on Zoom Ratio 1.18:1, for reference only)

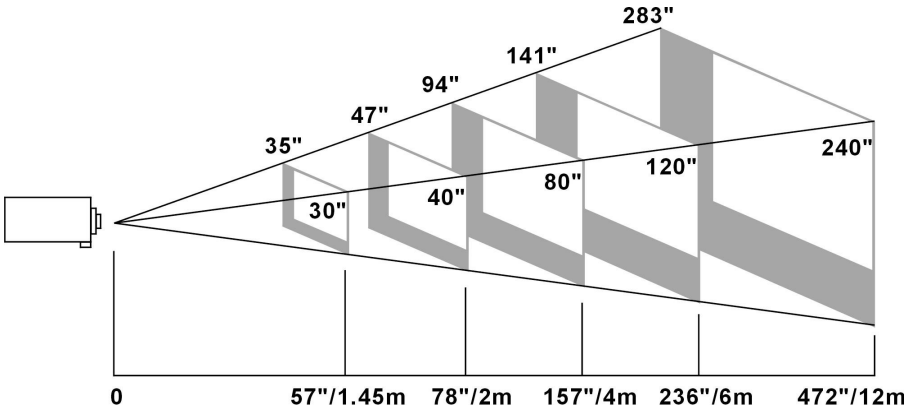

Projection distance	1.45M	2M	4M	6M	12M
Minimum diagonal screen size	30”	40”	80”	120”	240”
Maximum diagonal screen size	35”	47”	94”	141”	283”

9.3 Specifications

Resolution	XGA(1024*768), SXGA(1280*1024) compressed
Lamp	250W User Replaceable VIP Lamp
Dimensions	330 x 276 x 104 mm
Weight	7.5 lbs
Projection distance	1.4m～12m (3.9 ~ 39 ft)
Ratio of projection	1.34:1～ 1.6:1 (Distance: Diagonal)
Zoom ratio	1.2:1 (Manual Zoom/Focus)
Uniformity	80%
Screen proportion	4:3 / 16:9 screen selectable
Contrast ratio	1800：1
H. Frequency	31.5 ～ 80 kHz
V. Scan rate	56 ～ 85 Hz
Video compatibility	NTSC / PAL /SECAM
HDTV compatibility	480p/720p/1080i
Power supply	90 to 240 VAC, 50 to 60 Hz
Power consumption	350W
IO port	DVI, USB Mouse, RGB In(D-Sub 15 pin), RGB Out(D-Sub 15 pin), Component Video, S-Video Mini DIN 4 pin, Audio: RCA Jack, 3.5mm Mini Jack, Composite Video(RCA Jack), PC Audio In, PC Audio Out, 2 watt speaker

* These specifications are subject to change without notice.

This device complies with Part 15 of the FCC Rules. Operation is subject to the following two conditions: (1) the device may not cause harmful interference, and (2) this device must accept any interference received, including interference that may cause undesired operation.

LIMITED WARRANTY

Boxlight ("Boxlight") warrants that each Boxlight CD-726c ("the Product") sold hereunder will conform to and function in accordance with the written specifications of Boxlight. Said limited warranty shall apply only to the first person or entity that purchases the Product for personal or business use and not for the purpose of distribution or resale. Said warranty shall continue for a period of two (2) years from the date of such purchase. The standard limited warranty excludes the lamps in projectors after 120 days or 500 hours (whichever comes first) and the accessories after one year. Boxlight does not warrant that the Product will meet the specific requirements of the first person or entity that purchases the Product for personal or business use. Boxlight's liability for the breach of the foregoing limited warranty is limited to the repair or replacement of the Product or refund of the purchase price of the Product, at Boxlight's sole option. Replacement Product may be re-furbished in "like-new" condition, at Boxlight's sole discretion. To exercise the Purchaser's rights under the foregoing warranty, the Product must be returned at the Purchaser's sole cost and expense, to Boxlight or to any authorized Boxlight service center, and the Product must be accompanied by a written letter explaining the problem and which includes (i) proof of date of purchase; (ii) the dealer's name; and (iii) the model and serial number of the Product. When sending your unit in for repair, please ship your unit in its original packing material or a Boxlight approved ATA Shipping Case, or have a professional packaging company pack the unit. Please insure your shipment for its full value. **A return authorization number, issued by the Boxlight Customer Service department, must also be clearly displayed on the outside of the shipping carton containing the Product.**

WARRANTY LIMITATION AND EXCLUSION

Boxlight shall have no further obligation under the foregoing limited warranty if the Product has been damaged due to abuse, misuse, neglect, accident, unusual physical or electrical stress (unusual physical and electrical stress includes unusually long operation, exposure to smoke and other airborne contaminants), unauthorized modifications, tampering, alterations, or service other than by Boxlight or its authorized agents, causes other than from ordinary use or failure to properly use the Product in the application for which said Product is intended.

DISCLAIMER OF UNSTATED WARRANTIES

THE WARRANTY PRINTED ABOVE IS THE ONLY WARRANTY APPLICABLE TO THIS PURCHASE. ALL OTHER WARRANTIES, EXPRESS OR IMPLIED, INCLUDING, BUT NOT LIMITED TO, THE IMPLIED WARRANTIES OF MERCHANTABILITY AND FITNESS FOR A PARTICULAR PURPOSE ARE DISCLAIMED. THERE ARE NO WARRANTIES THAT EXTEND BEYOND THE FACE HEREOF AND THE FOREGOING WARRANTY SHALL NOT BE EXTENDED, ALTERED OR VARIED EXCEPT BY WRITTEN INSTRUMENT SIGNED BY BOXLIGHT. SOME STATES DO NOT ALLOW LIMITATIONS ON HOW LONG AN IMPLIED WARRANTY MAY LAST, SO SUCH LIMITATIONS MAY NOT APPLY TO YOU.

LIMITATION OF LIABILITY

IT IS UNDERSTOOD AND AGREED THAT BOXLIGHT'S LIABILITY WHETHER IN CONTRACT, IN TORT, UNDER ANY WARRANTY, IN NEGLIGENCE OR OTHERWISE SHALL NOT EXCEED THE RETURN OF THE AMOUNT OF THE PURCHASE PRICE PAID BY PURCHASER AND UNDER NO CIRCUMSTANCES SHALL BOXLIGHT BE LIABLE FOR SPECIAL, INDIRECT, INCIDENTAL OR CONSEQUENTIAL DAMAGES OR LOST PROFITS, LOST REVENUES OR LOST SAVINGS. THE PRICE STATED FOR THE PRODUCT IS A CONSIDERATION IN LIMITING BOXLIGHT'S LIABILITY. NO ACTION, REGARDLESS OF FORM, ARISING OUT OF THE AGREEMENT TO PURCHASE THE PRODUCT MAY BE BROUGHT BY PURCHASER MORE THAN ONE YEAR AFTER THE CAUSE OF ACTION HAS ACCRUED. SOME STATES DO NOT ALLOW THE EXCLUSION OR LIMITATION OF INCIDENTAL OR CONSEQUENTIAL DAMAGES SO THE ABOVE LIMITATION OR EXCLUSION MAY NOT APPLY TO YOU. THIS LIMITED WARRANTY GIVES YOU SPECIFIC LEGAL RIGHTS, AND YOU MAY ALSO HAVE OTHER RIGHTS THAT VARY FROM STATE TO STATE.

Boxlight Corporation
19332 Powder Hill Place
Poulsbo, WA 98370-7407 USA
USA and Canada 800.762.5757
International +1.360.779.7901
www.boxlight.com