USA's primary source for projector lamps
myprojectorlamps

PROJECTOR OWNER'S MANUAL

BenQ

SL 705X-S

Need a replacement lamp for this projector?

www.myprojectorlamps.com

Original manufacturer manual, provided unmodified as a courtesy of MyProjectorLamps.com.
All trademarks belong to their respective owners.

DLP PROJECTOR

SL 705X/S

USER'S MANUAL

Thank you for purchasing the Benq DLP Projector.

Please read this user's guide to ensure correct use of the device. Save this user's guide for future reference.

OUTLINE

This DLP Projector can display various computer signals and NTSC/PAL/SECAM video signals.

FEATURES

1. **High Brightness**
2. **High Resolution**
3. **Compact Size, Feather Weight for Portability**
4. **Durable Magnesium Alloy Body**
5. **RGB Input Terminal**
6. **One Touch Auto-Adjustment Function**
7. **Easy Keystone Adjustment**

Copyright

Copyright © 2002 by Benq Corporation (formerly Acer Communications & Multimedia Inc.). All rights reserved. No part of this publication may be reproduced, transmitted, transcribed, stored in a retrieval system or translated into any language or computer language, in any form or by any means, electronic, mechanical, magnetic, optical, chemical, manual or otherwise, without the prior written permission of Benq Corporation.

Disclaimer

Benq Corporation makes no representations or warranties, either expressed or implied, with respect to the contents hereof and specifically disclaims any warranties, merchantability or fitness for any particular purpose. Furthermore, Benq Corporation reserves the right to revise this publication and to make changes from time to time in the contents hereof without obligation of Benq Corporation to notify any person of such revision or changes.

Fill this in!!	
For future service convenience, record the following information in the space below. The serial number is on the back of the product.	
Projector Information	
Product Name:	SL 705X/S
Serial Number:	
Date of Purchase:	
Dealer Information	
Dealer:	
Telephone Number:	
Address:	

Table of Contents

Introduction 1

Safety Instructions 1

Warranty 2

Limited Warranty 2

Shipping Contents 3

Optional Accessories. 3

Projector Description 4

Projector 4

External Control Panel 5

Adjuster 6

Projector Features. 6

Remote Control Description 7

Remote Control Features 7

Installing or Replacing Batteries 9

Installation 10

Screen Size 10

Connecting to Various Equipment 10

Operation 11

Start Up 11

Digital Keystone Correction 12

Auto Adjustment 12

Source Selection 13

Menu System 13

1. Display Menu 14

2. Image Menu 15

3. Source Menu 16

4.Control Menu 17

5. PIP Menu 17

Shutdown 18

Maintenance 19

Lamp Information 19

Use and Replacement of Lamp 19

LED Status Indicators 19

Lamp Replacement 19

Resetting Lamp Hours 21

Service Information 22

Accessories (Included in the Standard Package). 22

Optional Accessories (Not Included in the Standard Package) 22

Ordering Parts or Getting Information. 22

Troubleshooting 23
Status Messages 24
Specifications 25
Projector Specifications 25
Timing Chart 26
Dimensions. 27

INTRODUCTION

⚠ Caution

TO PREVENT SHOCK, DO NOT OPEN THE CABINET. NO USER –SERVICEABLE PARTS INSIDE. REFER SERVICING TO QUALIFIED SERVICE PERSONNEL. PLEASE READ THIS USER'S GUIDE BEFORE YOU OPERATE YOUR PROJECTOR. SAVE THIS USER'S GUIDE FOR FUTURE REFERENCE .

Safety Instructions

1. Read this user's guide before you operate your projector and save it for future reference.
2. The lamp becomes extremely hot during operation. Allow the projector to cool for approximately 45 minutes prior to removing the lamp assembly for replacement. Do not operate lamps beyond the rated lamp life. Excessive operation of lamps beyond the rated life could cause them to explode on rare occasions.
3. Never replace lamp assembly or any electronic components unless the projector is unplugged.
4. To reduce the risk of electric shock, do not disassemble this appliance. Take it to a qualified technician when service or repair is required. Incorrect reassembly can cause electric shock when the appliance is subsequently used.
5. Do not place this product on an unstable cart, stand, or table. The product may fall, causing serious damage to the product.
6. This product is capable of displaying inverted images for ceiling mount installation. Please use suitable equipment for mounting the unit and ensure it is securely installed.

⚠ Caution

- **Always open the lens shutter or remove the lens cap when the projector lamp is on.**
- **Do not look straight at the projector lens during operation. The intense light beam may damage your eyesight.**
- **In some countries, the line voltage is NOT stable. This projector is designed to operate safely within a bandwidth of 110 to 230 volts, but could fail if power cuts or surges of ±10 volts occur. In these high-risk areas, it is recommended to install a power stabilizer unit.**

Save this user's guide: The information contained in this manual will assist you in operating and maintaining your Personal Projector.

Warranty

Limited Warranty

Benq warrants this product against any defects in material and workmanship, under normal usage and storage.
Exclusion to Warranty: The lamps are considered a consumable item and are warrantied for 90 days or 500 hours, whichever occurs first. Proof of purchase date will be required with any warranty claim. In the event this product is found to be defective within the warranty period, Benq's only obligation and your exclusive remedy shall be replacement of any defective parts (labor included). To obtain warranty service, notify the dealer immediately from which you purchased the product of any defects.
Important: The above warranty shall be void if the customer fails to operate the product in accordance with Benq's written instructions. This warranty gives you specific legal rights, and you may have other rights which vary from country to country.

FCC STATEMENT - CLASS A: This equipment generates, uses and can radiate radio frequency energy, and if not installed and used in accordance with the instruction manual, may cause interference to radio communications. It has been tested and found to comply with the limits for a Class "A" computing device pursuant to Subpart B of Part 15 of the FCC Rules, which are designed to provide reasonable protection against such interference when operated in a commercial environment. Operation of this equipment in a residential area is likely to cause interference, in which case the user at his/her own expense will be required to take whatever measures may be required to correct the interference.

FCC STATEMENT - CLASS B: This equipment generates, uses and can radiate radio frequency energy and, if not installed and used in accordance with the instructions, may cause harmful interference to radio communications. However, there is no guarantee that interference will not occur in a particular installation. If this equipment does cause harmful interference to radio or television reception, which can be determined by turning the equipment off and on, the user is encouraged to try to correct the interference by one or more of the following measures:

- Reorient or relocate the receiving antenna.
- Increase the distance between the equipment and receiver.
- Connect the equipment into an outlet on a circuit different from that to which the receiver is connected.
- Consult the dealer or an experienced radio/TV technician for help.

EEC STATEMENT: This machine was tested against the 89/336/EEC (European Economic Community) for EMC (Electro Magnetic Compatibility) and fulfills these requirements.

Shipping Contents

The Projector is shipped with the necessary cables required for standard PC or laptop computer connections. Carefully unpack and verify that you have all the items shown below. If any of these items are missing, please contact your place of purchase.

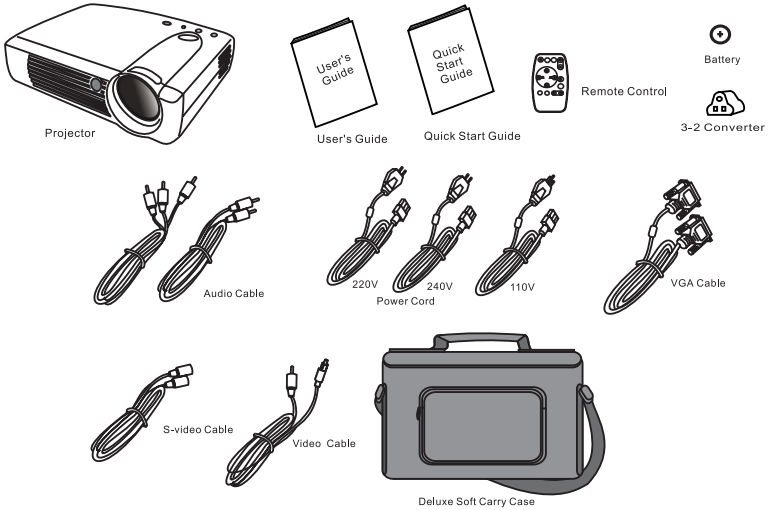

Optional Accessories

1. Spare lamp kit
2. Macintosh adaptor

Projector Description

Projector

1. External control panel (see next page)	9. Video connector
2. Projection lens	10. D-sub connector (for computer/ HDTV input)
3. Front adjustment feet	11. Audio input
4. IR remote sensor	12. Rear adjustment feet
5. Ventilation grill	13. Lamp access door (underneath unit)
6. Kensington lock	
7. AC power cord input	
8. S-video connector	

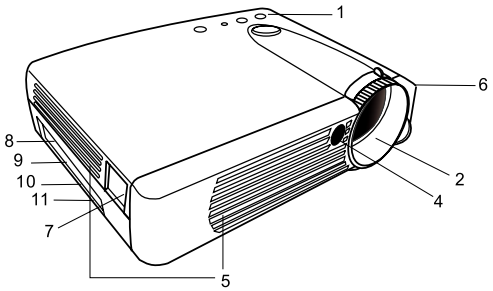

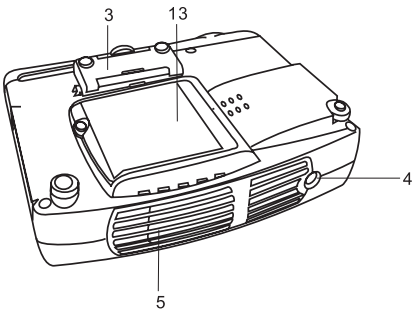

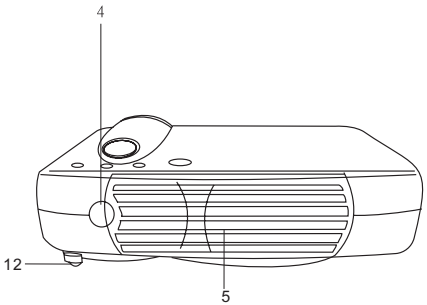

External Control Panel

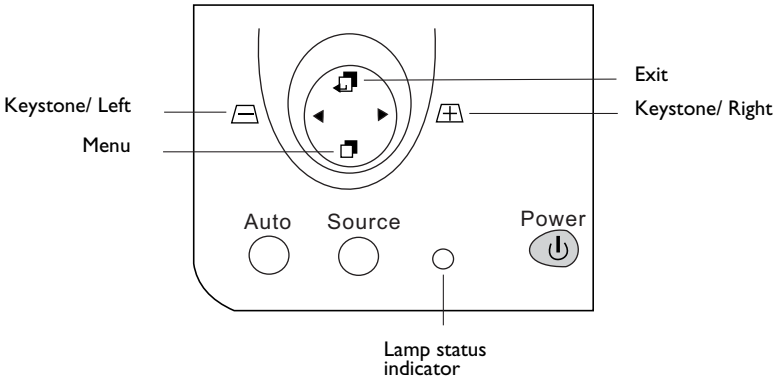

- The **Infrared Remote Receiver (Front and Rear)** allows the projector to accept signals from the remote control. For best results, be sure to aim the control toward the sensor without any obstructions between the two, and at a distance no greater than 6 meters.
- **Menu** will display the menu system on screen. Press **Menu** again to access the sub-menus. **Left** and **Right** help you navigate among choices and settings in the menus and sub-menus. However, when the on screen menu is not activated, the **Left** and **Right** buttons will function as **Keystone +/-** hot keys.
- Press the **Exit** button to go back to the main menu. Press **Exit** again to leave the menu system.
- The **Status Indicator** will blink or light up when the lamp needs service, cooling or replacement. See "Lamp Information" on page 19. for more detailed information.
- When the projector is on, **Back-lit Power** will blink during warm-up and turn to solid green to indicate the projector is ready for use.
- Press **Power** for 1 second to turn the projector on or off.
- **Auto** key: Automatically sense the best picture quality for current received signals.
- **Source** key: Select signal sources, PC, Video, S-video and YPbPr.

Adjuster

The projector is equipped with a quick-release adjuster foot and button for adjusting its tilt angle.

1. Lift the projector up and press the adjuster button to release the adjuster.
2. The adjuster will drop into position and be locked.

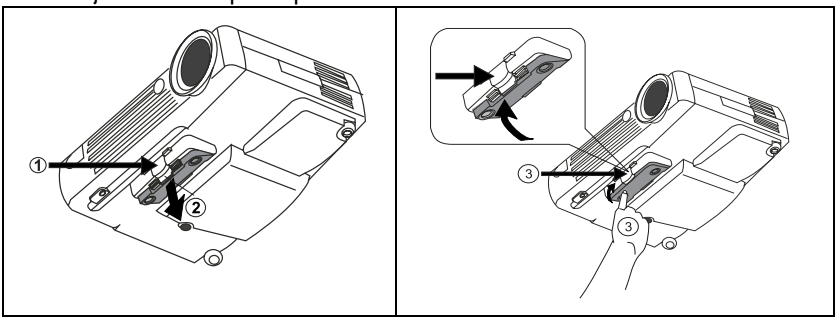

Projector Features

The Projector integrates high performance optical engine projection and user-friendly design to deliver high reliability and ease of use experience.

The Projector offers the following features:

- Compact and portable unit
- Full-function remote control
- Manual zoom lens
- One key auto-adjustment to display the best picture quality
- Easy digital keystone correction through hot keys to correct tilted pictures
- Adjustable color balance control for data/video
- Ultra-high brightness projection lamp
- Ability to display high quality 16.7 million colors
- On screen menus in 7 languages: English, French, German, Italian, Spanish, Simplified Chinese, and Traditional Chinese.
- Powerful AV function to provide high AV picture results.
- HDTV compatibility (YPbPr)

Note: The brightness of your machine will vary depending on the ambient room conditions and contrast/brightness settings.

Remote Control Description

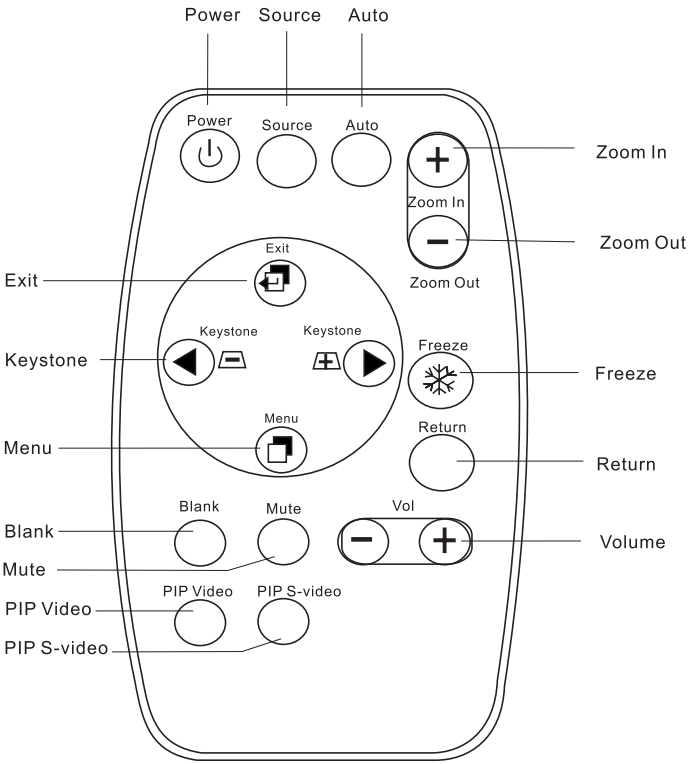

Remote Control Features

The remote control sensors are located in the front/ back of the projector. The distance between the sensor and the remote control should not exceed 6 meters.

FREEZE

The image can be frozen when FREEZE is pressed. A “Pause” icon will appear in the lower right corner of the screen for three seconds. To release the freeze function, press the FREEZE button, RETURN button or SOURCE button (when the input source is switched over during display) again. A “Play” icon will appear in the lower right corner of the screen for three seconds when the freeze function is released.

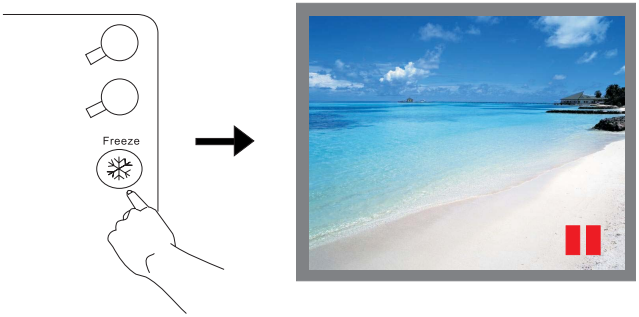

ZOOM IN/OUT

By pressing ZOOM IN +, the center of the picture will be magnified. When the **+** button is pressed again, the picture is further magnified, up to four times the original size. By pressing ZOOM OUT -, the size of the image is reduced. When the **-** button is pressed again, the picture is further reduced until it is restored to its original size. To return to the normal display mode, press the RETURN button. (This function can be used in combination with FREEZE.)

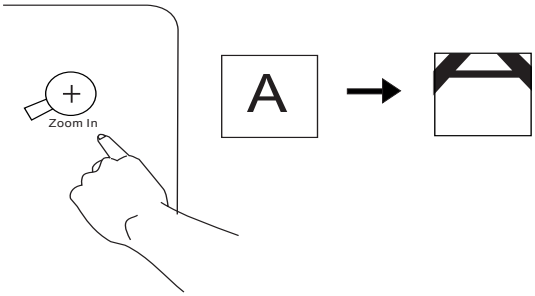

Installing or Replacing Batteries

- Push and slide the battery compartment lid in the direction shown.
- Install a battery as indicated by the diagram inside the compartment.
- Position the lid over the compartment and snap it back into place.

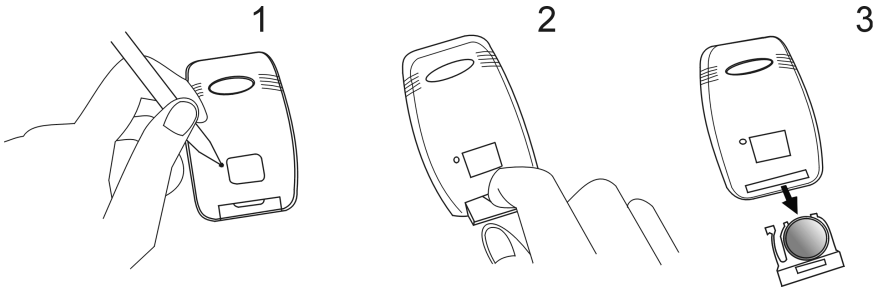

⚠ Caution

Avoid excessive heat and humidity. Danger of explosion may happen if a battery is incorrectly replaced. Replace only with the same or equivalent type recommended by the manufacturer. Dispose of used batteries according to the manufacturer's instructions.

INSTALLATION

Screen Size

Place the projector at the required distance from the screen according to the desired picture size (see the table below).

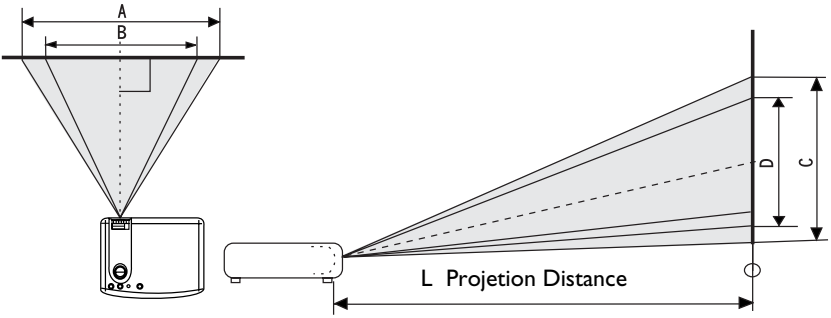

Screen Size (Max.)			L. Projection distance (cm)	Screen Size (Min.)	
Diagnal	A. Width (cm)	C. Height (cm)		B. Width (cm)	D. Height (cm)
30.4	61.8	46.3	100	50.7	38.0
60.8	123.65	92.7	200	101.3	76.0
91.2	185.3	138.9	300	151.9	113.9
121.5	247.0	185.2	400	202.5	151.9
151.9	308.7	231.6	500	253.2	189.9
182.3	370.5	277.9	600	303.8	227.9
213.1	432.2	324.18	700	354.4	266.2
243.1	494.0	370.5	800	405.1	303.8
273.5	555.7	416.7	900	455.7	341.8
303.9	617.5	463.11	1000	506.3	379.8

Connecting to Various Equipment

It only takes a few seconds to connect your projector to your computer/notebook, VCR or other systems. However, a Mac adapter (an optional accessory) is needed for connection for Macintosh users.

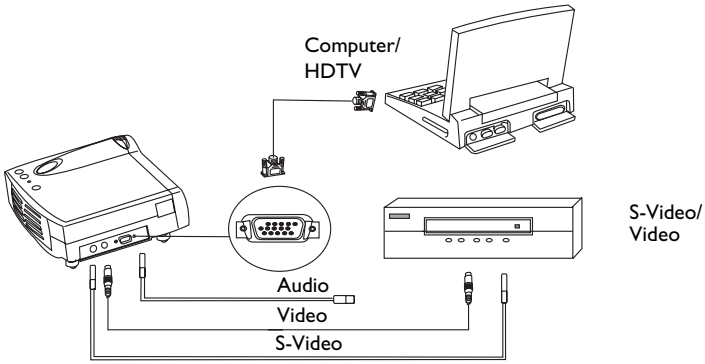

OPERATION

Start Up

1. Plug the power cord into a wall socket.
2. Press POWER for 1 second.

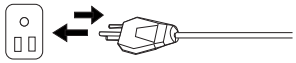

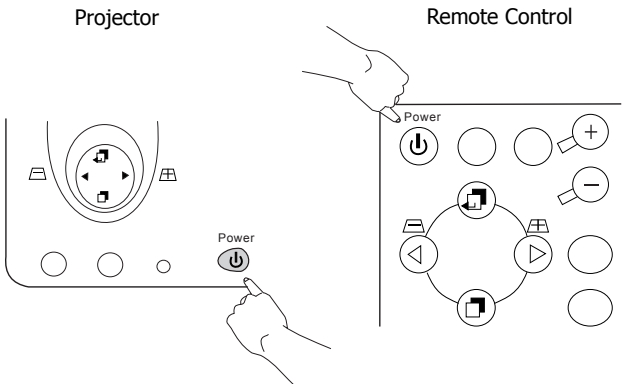

- The back-lit POWER key blinks green and stays green when the power is turned on.
  (When the power is turned off, there is a 60-second cooling period before the projector can be re-started.)

3. Switch on all connected equipment.

Digital Keystone Correction

Keystoning is when the projected image is noticeably wider on either the top or bottom. To correct this, press KEYSTONE +/- (hot key) on the control panel of the projector or on the remote control, then adjust the sliding bar labeled Keystone, as needed. Press **+** to correct keystoning at the top of the image. Press **-** to correct keystoning at the bottom of the image.

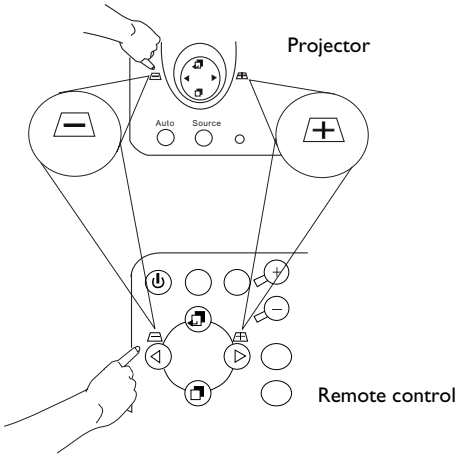

Auto Adjustment

In some cases, you may have to optimize the picture quality manually. To do this, press the AUTO key on the control panel of the projector or on the remote control. Within 3 seconds, the built-in Intelligent Auto Adjustment function will re-adjust to the best picture quality.

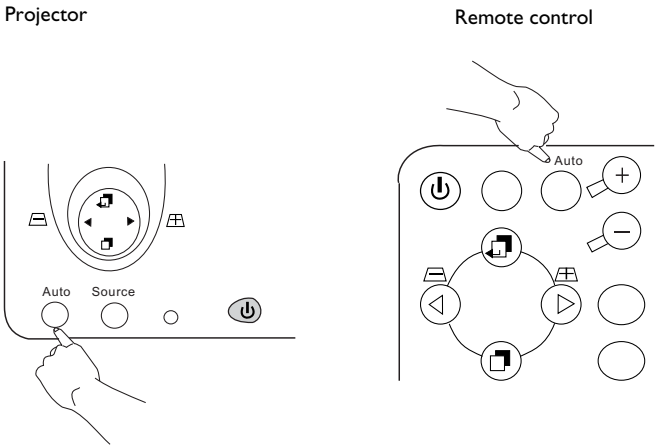

Source Selection

When several input sources are available, press the SOURCE key to make a selection from the control panel of the projector or the remote control.

Projector

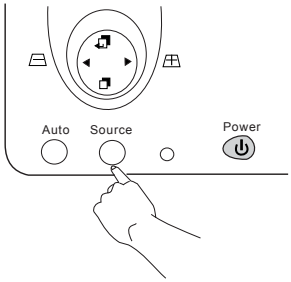

Remote control

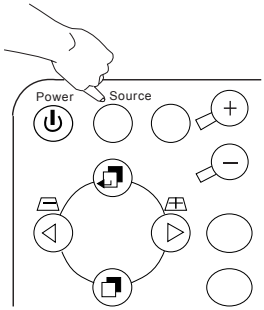

Menu System

Press **Menu** for the main menu and press ◀ or ▶ to select a sub-menu. Press **Menu** again to select items in the sub-menu.

Menu Bar	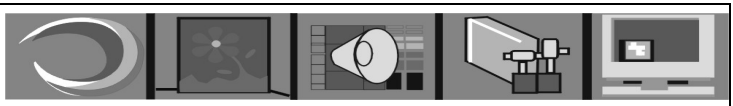				
Sub-menu	**Display**	**Image**	**Source**	**Control**	**PIP**
PC	Keystone Brightness Contrast Phase H.Size	Auto resize H-position V-position Color Temp Information	Mirror Source Volume Treble Bass Mute	Langauge OSD OSD Time Auto Off Reset Lamp hour	Main page: PIP Source PIP Size PIP Pos. H. Position V.Position More Options Sub Page: Brightness Contrast Color Tint Sharpness System
Y/Pb/Pr		Auto resize H-position V-position Color Tint Color Temp			
Video	Keystone Brightness Contrast Color Tint	Ratio System Sharpness Color Temp Information			

1. Display Menu

Keystone	Corrects the keystone of the image. 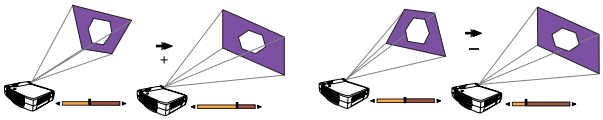
Brightness	Adjusts the brightness of image. 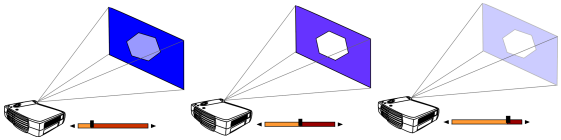
Contrast	Adjusts the degree of difference between darkness and lightness of image. 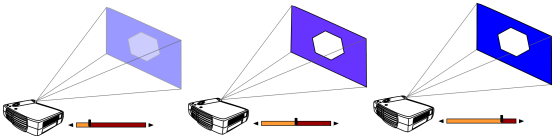
Phase	Adjusts to fit in the desired image size. 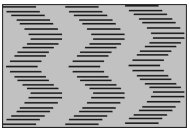 ***This function is not available when the input modes are Video, S-Video.**
H.Size	Adjusts to avoid the occurrence of flicker. ***This function is not available when the input modes are Video, S-Video.**
Color	Adjusts to increase or decrease the colors (R, G, B) of image. ***This function is not available when the input mode is PC.**
Tint	Adjusts to make the image look more red or blue. ***This function is not available when the input mode is PC.**

2. Image Menu

Auto resize	Makes the best fit of the image to the screen, **OFF ON**
H-position	Adjusts the horizontal position of image. 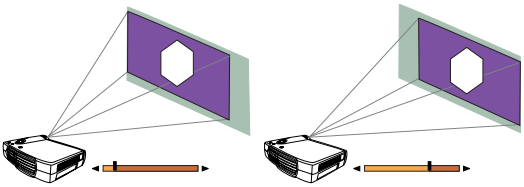
V-position	Adjusts the vertical positon of image. 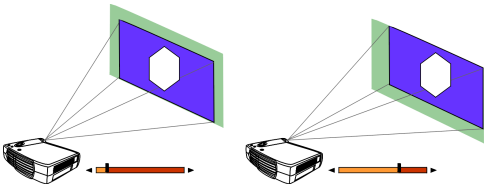
Color Temp.	Adjusts the color temperature to fit your preference.
Information	Shows the current resolution.
Ratio	Users have 2 options for the image ratio. 1. 4:3 (Normal) 2. 16:9 (Wide) ***This function is not available when the input modes are PC, YPbPr.***
System	4 modes can be selected. 1. Auto 2. PAL-M 3. PAL-N 4.SECAM ***The default setting of System is Auto.*** ***This function is not available when the input modes are PC, YPbPr.***
Sharpness	Adjusts to make the image look sharper or softer. ***This function is not available when the input modes are PC, YPbPr.***
Color	Adjusts to increase or decrease the colors (R, G, B) of image. ***This function is not available when the input mode is PC.***
Tint	Adjusts to make the image look more red or blue. ***This function is not available when the input mode is PC.***

3. Source Menu

Mirror 1. Default 2. Ceiling - mounted projection 3. Rear screen projection 4. Ceiling - mounted and rear screen projection	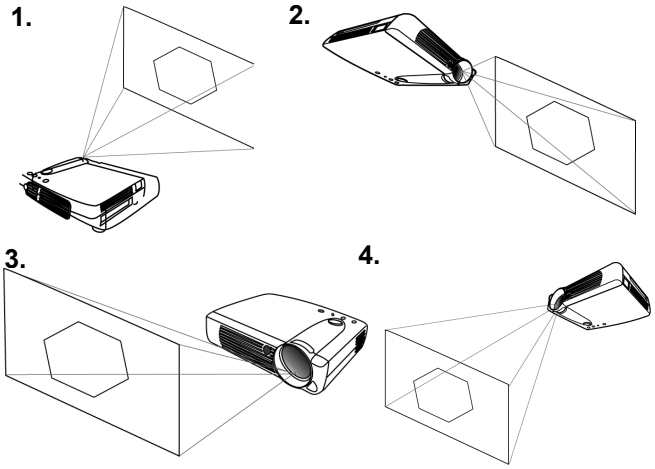
Source	Selects sources between PC, Video, S-Video, and YPbPr.
Volume	Adjusts the volume level.
Treble	Adjusts the treble level.
Bass	Adjusts the bass level.
Mute	**Off** **On** 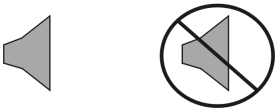

4.Control Menu

Language	Language sets the OSD to display in one of 7 languages. Use ◀ / ▶ key to select the languages: English, French, German, Italian, Spanish, Simplified Chinese and Traditional Chinese.
OSD	Selects a desired OSD position.
OSD Time	Sets the length of time the OSD will remain active after the last time you pressed the button. The range is from 5 to 60 seconds in 5-second increments.
Auto Off	Sets the length of time to shut off the system when no input is detected.
Reset	Returns all settings to the time of manufacturing.
Lamp hour	Shows lamp usage time.

5. PIP Menu

These functions are valid only when the input mode is PC and the PIP source is Video or S-Video.

PIP Source	Selects the source from which the PIP picture comes.
PIP Size	Uses ◀ / ▶ key to scroll through the 4 alternatives: Off, Small, Medium, Large.
PIP Position	Selects a desired PIP position.
H Position	Adjusts the horizontal position of PIP image.
V Position	Adjusts the vertical position of PIP image.
More Options	Uses ◀ / ▶ key to select more PIP functions including Brightness, Contrast, Color, Tint, Sharpness and System.
Brightness	Adjusts the brightness of PIP image.
Contrast	Adjusts the degree of difference between darkness and lightness of PIP image.
Color	Adjusts to increase or decrease the colors (R, G, B) of image.
Tint	Adjusts to make the image look more red or blue.
Sharpness	Adjusts to make the image look sharper or softer
System	Selects PIP image systems: Auto, NTSC, PAL, SECAM

Shutdown

1. Press **POWER** and a warning message will prompt up. To turn off the projector, Press **POWER** again.
2. The fan will continue to run for approximately 60 seconds.

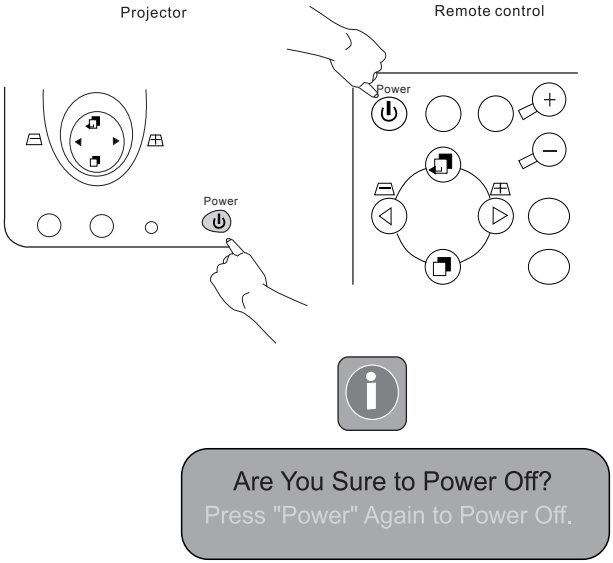

3. Disconnect the power cord from the wall socket.

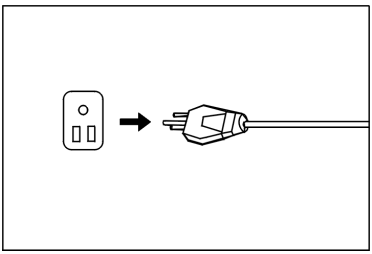

⚠ Caution

Please do not unplug the power cord before POWER is shut down or during the 60-second cooling process.

MAINTENANCE

Lamp Information

Use and Replacement of Lamp

When the Lamp Indicator lights up red or a message displays to suggest the time of lamp replacement, please change a new lamp or consult your dealer.An old lamp could cause a malfunction to the projector and may explode.

LED Status Indicators

Lamp Life Indicators	When this LED shows red continuously, it is warning you that the lamp life has exceeded 1500 hours. Replace the projection lamp with a new one immediately.
CHANGE THE LAMP, AND RESET THE LAMP TIMER	The lamp has been in operation for 1400 hours. Change a new lamp for optimal performance.
CHANGE THE LAMP. THE POWER WILL TURN OFF AFTER 20 HOURS	The lamp has been in operation for 1480 hours, and the power will turn off after 20 hours.
CHANGE THE LAMP!	The lamp has been in operation for over 1500 hours. The warning message will display for 30 seconds every 5 minutes after you turn on the projector and the power will turn off automatically in 10 minutes.
Lamp is not properly attached	LED blinks rapidly.
Temperature is too high	When the projector's internal temperature is too hot to operate safely, the LED blinks slowly for one minute and the lamp turns off automatically. If the LED light is off, the projector's lamp and temperature are operating under normal conditions.

⚠ Caution

The LAMP indicator will light up if the lamp becomes too hot. Turn off the power and let the projector cool for 45 minutes. If the LAMP indicator is still red when turning the power on, please contact your dealer.

Lamp Replacement

⚠ Caution

To reduce the risk of electrical shock, always turn off the projector and disconnect the power cord before changing the lamp.

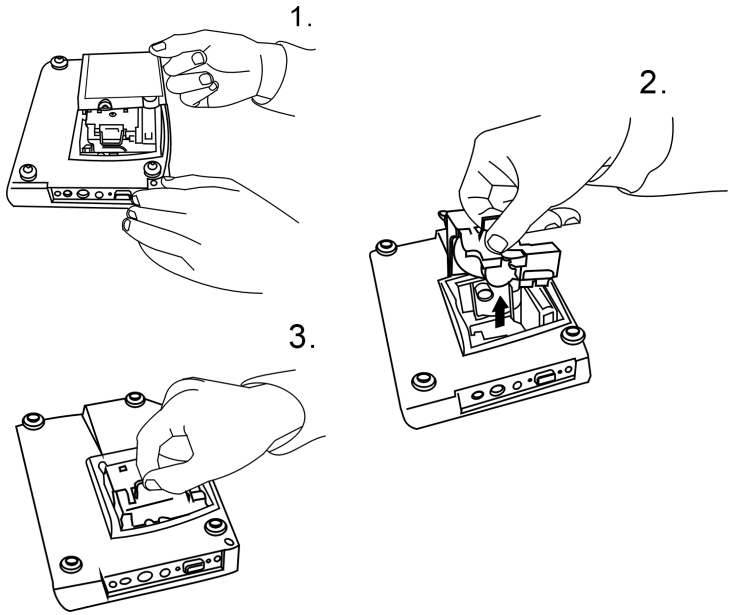

1. Press the **POWER** button to switch off the projector. Disconnect the power cord from the outlet and the projector.
2. Loosen the screw and remove the lamp cover. If the lamp is hot, avoid burns by waiting 45 minutes until the lamp has cooled.
3. Loosen the 3 screws. (It is strongly recommended you use a magnetic-headed screwdriver.) Pull the handle to remove the lamp housing. If the screws are not loosened completely, they could injure your fingers. Do not insert your hand into the box after the lamp is removed. If you touch the optical parts inside, this could cause color unevenness.
4. Replace the lamp with a new one. Insert it into the projector, and tighten the screws firmly. Loose screws may cause a bad connection, which may result in malfunction.
5. Re-install the lamp cover and tighten the screw. **Do not turn on the power with the lamp cover removed.** Whenever the lamp is replaced, reset the total lamp operation time. Do not reset if the lamp is not replaced as this could cause breakage.

⚠ Caution

To reduce the risk of severe burns, allow the projector to cool for at least 45 minutes before replacing the lamp.

To reduce the risk of injuries to fingers and damage to internal components, use caution when removing lamp glass that has shattered into sharp pieces.

To reduce the risk of injuries to fingers and/or decreasing image quality by touching the lens, do not touch the empty lamp compartment when the lamp is removed.

This lamp contains mercury. Consult your local hazardous waste regulations to dispose of this lamp in a proper manner.

Resetting Lamp Hours

If you replace the lamp after 1500 hours of operation, please proceed as follows within 10 minutes of power on.

OSD	FUNCTION
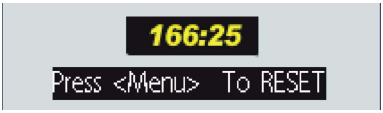	Press the Exit button on the projector for 3 seconds to display the total used lamp time.
	• Press the MENU button on the projector during the lamp hour message. An adjustment message will appear. • Press ◀ or ▶ to rest lamp hours or press EXIT to leave.

Service Information

Accessories (Included in the Standard Package)

Description	Part Number
Power cord (EU)	27.01218.191
Power cord (US)	27.01118.131
Power cord (UK)	27.02718.201
Signal cable	50.J0508.502
Video cable	50.J1303.501
S-Video cable	50.72920.011
PC - PC Audio cable	50.74405.501
Audio - PC Audio cable	50.J0705.501
Soft carrying case	98.J1302.001
Lens cover	60.J1334.001
Remote control	98.J2406.001
3-2 converter	22.91007.001

Optional Accessories (Not Included in the Standard Package)

Description of parts	Part number
Mac Adapter (switchable)	20.20118.A15
120W Lamp module	60.J1322.001
HDTV Cable	50.J2401.001
Compact leather case	98.J1904.001

Ordering Parts or Getting Information

For product information, product assistance, service information, or to order accessories, please contact Benq corporation at http://www.benq.com.

TROUBLESHOOTING

Common Problems & Solutions

PROBLEMS	TRY THESE SOLUTIONS
NO POWER	• Plug the power cord into the AC inlet. • Plug the power cord into the power inlet. • Wait two minutes after the projector is turned off before turning the projector back on.
NO PICTURE	• Check for the proper input source. • Ensure all cables are connected properly. • Adjust the brightness and contrast. • Remove the lens cap.
TRAPEZOID IMAGE ON THE SCREEN	• Reposition the unit to improve its angle on the screen. • Use the **Keystone** correction key on the control panel of the projector or the remote control unit.
POOR COLOR	• Select the correct video system. • Adjust brightness, contrast, or saturation.
BLURRED IMAGE	• Press **Auto** on the control panel of the projector or the remote control unit to get better picture quality. • Adjust the focus. • Reposition the unit to improve its screen angle. • Ensure the distance between the unit and screen is within the adjustment range of the lens.
REMOTE CONTROL DOES NOT WORK	• Replace the batteries with new ones. • Make sure there is no obstacle between the remote control and the unit. • Stand within 4 meters (13 feet) of the unit. • Make sure nothing blocking the front and rear receivers.

Status Messages

On Screen Messages	Description
SEARCHING	Projector is searching for input.
INPUT SIGNAL DETECTED, ACTIVATING AUTO IMAGE	Projector has identified the input signal and is running the auto image adjustment function.
SYNC IS OUT OF RANGE	Input signal frequency exceeds the projector's.
CHANGE THE LAMP, AND RESET THE LAMP TIMER	The lamp has been in operation for 1400 hours. Lamp replacement is recommended.
CHANGE THE LAMP, THE POWER WILL TURN OFF AFTER 20 HOURS	The lamp has been in operation for 1480 hours, and the power will turn off after 20 more hours. Replace the lamp as soon as possible.
CHANGE THE LAMP!	The lamp has been in operation for over 1500 hours, and the power will turn off automatically in 10 minutes. Replace the lamp immediately.

SPECIFICATIONS

Projector Specifications

Technical Specifications

Note: All specifications are subject to change without notice.

General		
Product name	Personal Projector	
Model name	SL705X	1024X768 XGA
	SL705S	800X600 SVGA
Optical		
Display system	1-CHIP DMD	
Lens F/Number	F/2.6	
Lamp	120W VIP lamp	
Electrical		
Power supply	AC100 ~ 240V, 2.3A, 50/60 Hz (Automatic)	
Power consumption	185 W (Max)	
Mechanical		
Dimensions	220 mm (W) x 52 mm (H) x 175 mm (D)	
Operating Temperature range	10°C ~ 40°C	
Weight	3.85 lbs (1.69 Kg)	
Input terminal		
Computer Input		
RGB/ HDTV Input	D-sub 15-pin (female)	
Video Signal Input		
S VIDEO	Mini DIN 4-pin terminal	
VIDEO	RCA Jack terminal	
Audio Signal Input		
Audio	Mini Jack Stero Terminal	
Output		
Speaker	1 Watt x 1	

Timing Chart

Resolution	H Sync (kHz)	V Sync (Hz)	Remark
640x350	31.5	70.1	
640x400	37.9	85.1	VESA
720x400	31.5	70.0	
720x400	37.9	85.1	VESA
640x480	31.5	60.0	VESA
640x480	37.9	72.8	VESA
640x480	35	66.7	Macintosh
640x480	43.3	85.0	VESA
800x600	35.2	56.3	VESA
800x600	37.9	60.3	VESA
800x600	46.9	75.0	VESA
800x600	48.1	72.2	VESA
800x600	53.7	85.1	VESA
832x624	49.7	74.5	Macintosh
1024x768	48.4	60.0	VESA
1024x768	56.5	70.1	VESA
1024x768	60.0	75.0	VESA
1024x768	68.7	85.0	VESA
1280x1024	64.0	60.0	VESA
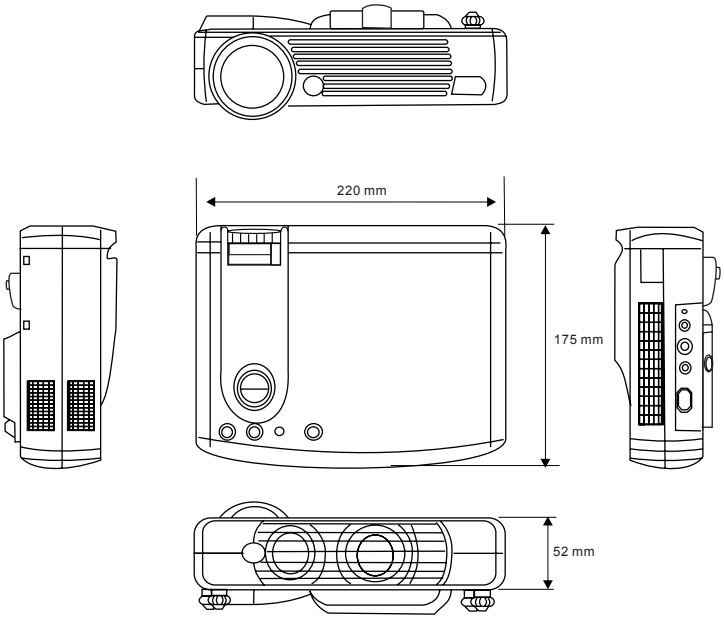
DIMENSIONS