USA's primary source for projector lamps
myprojectorlamps

PROJECTOR OWNER'S MANUAL

BenQ

MH760

Need a replacement lamp for this projector?

www.myprojectorlamps.com

Original manufacturer manual, provided unmodified as a courtesy of MyProjectorLamps.com.
All trademarks belong to their respective owners.

MH760

Digital Projector

User Manual

V 1.00

English

Table of contents

Important safety instructions 3

Overview.....6

Shipping contents.....6
Remote control batteries.....7
Remote control operation.....7
Projector features 8
Projector exterior view.....9
Controls and functions.....11
- Control panel 11
- Remote control.....12

Positioning your projector 13

Choosing a location 13
Obtaining a preferred projected image size 14
- Projection dimensions 15
- Shifting the projection lens.....16

Connecting to video equipment 17

- Preparations.....17
- Connecting HDMI devices.....17
- Connecting MHL devices.....18
- Connecting S-Video devices.....18
- Connecting video devices.....19
- Connecting a computer 20
- Connecting a monitor 20

Using the projector 21

Turning the projector on 21
Selecting an input source.....22
Using the menus 23
Securing the projector 24
- Using a security cable lock 24
- Utilizing the password function.....24

Adjusting the projected image.....27
- Adjusting the projection angle 27
- Auto-adjusting the image 27
- Fine-tuning the image size and clarity.....27
- Correcting picture distortion.....28

Using the preset and user modes 30
Fine-tuning the picture quality 32
Advanced picture quality controls 33
Selecting the aspect ratio 36
Setting a wall color 38
Hiding the image..... 38
Locking control keys 38
Freezing the image..... 38
Adjusting the sound..... 39
Using the test pattern 39
Using the teaching templates 40
Setting the lamp mode..... 41
Controlling the projector through a Wired LAN environment 42
Operating in a high altitude environment..... 46
Turning the projector off..... 47
On-Screen Display (OSD) menus..... 48

Additional information 58

Care of the projector 58
Lamp information..... 59
- Getting to know the lamp hour.....59
- Extending lamp life 59
- Timing of replacing the lamp 60
- Replacing the lamp 61
- Indicators.....64

Troubleshooting..... 65
Specifications..... 66

Warranty and Copyright information 72

Thank you for your purchase of this quality BenQ projector! It has been designed to provide you with an enjoyable home theater viewing experience. For the best results, please read this manual through carefully as it is your guide through the control menus and operation.

Important safety instructions

Your projector is designed and tested to meet the latest standards for safety of information technology equipment. However, to ensure safe use of this product, it is important that you follow the instructions mentioned in this manual and marked on the product.

1. Please read this user manual before you operate your projector. Keep this manual in a safe place for future reference.

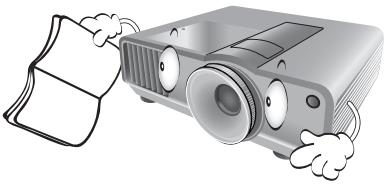

2. Always place the projector on a level, horizontal surface during operation.
   - Do not place the projector on an unstable cart, stand, or table as it may fall and be damaged;
   - Do not place inflammables near the projector;
   - Do not use if tilted at an angle of more than 10 degrees left to right, nor at angle of more than 15 degrees front to back.

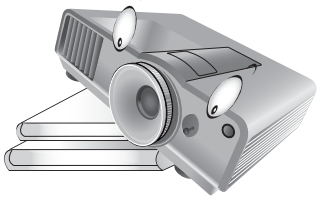

3. Do not store the projector on end vertically. Doing so may cause the projector to fall over, causing injury or resulting in damage.

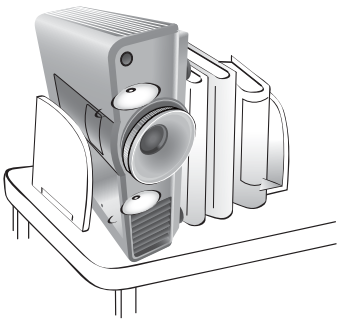

4. Do not place the projector in any of the following environments:
   - space that is poorly ventilated or confined. Allow at least 50 cm clearance from walls and free flow of air around the projector;
   - locations where temperatures may become excessively high, such as the inside of a car with all windows closed;
   - locations where excessive humidity, dust, or cigarette smoke may contaminate optical components, shorten the projector's lifespan and darken the screen;

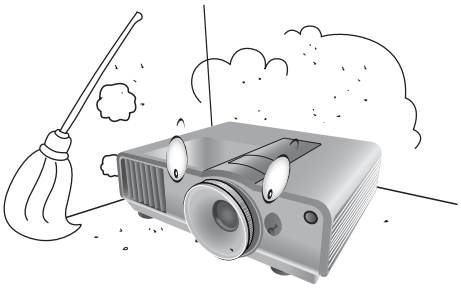

   - locations near fire alarms;
   - locations with an ambient temperature above 40°C/104°F;
   - locations where altitude is higher than 3000 meters/9840 feet above sea level.

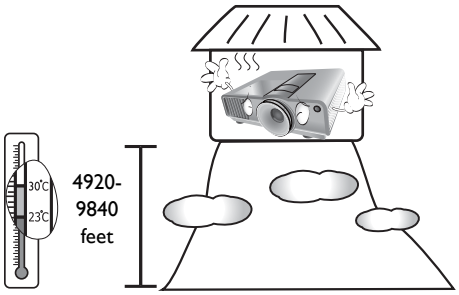

5. Do not block the vents holes while the projector is on (even in standby mode):
   - Do not cover the projector with any item;
   - Do not place the projector on a blanket, bedding or any other soft surface.

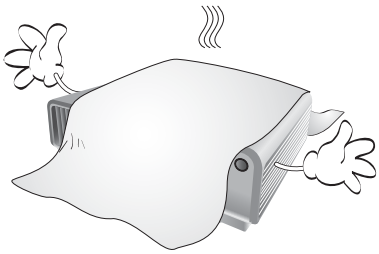

6. In areas where the mains power supply voltage may fluctuate by ±10 volts, it is recommended that you connect your projector through a power stabilizer, surge protector or uninterruptible power supply (UPS) as appropriate to your situation.

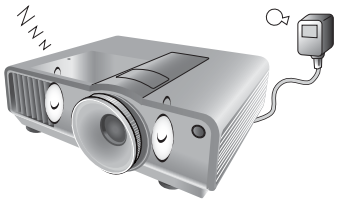

7. Do not step on the projector or place any objects upon it.

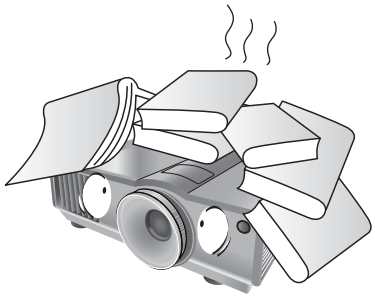

8. Do not place liquids near or on the projector. Liquids spilled into the projector will void your warranty. If the projector does become wet, disconnect it from the power point and call BenQ to have the projector repaired.

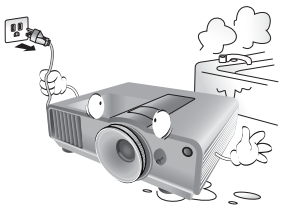

9. Do not look straight into the projector lens during operation. It may harm your sight.

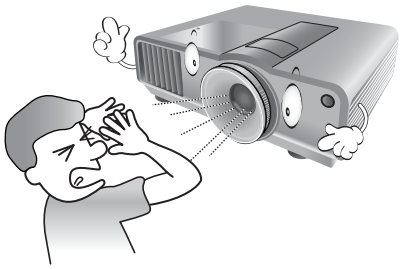

10. Do not operate the projector lamp beyond the rated lamp life. Excessive operation of lamps beyond the rated life could cause a lamp to break on rare occasions.

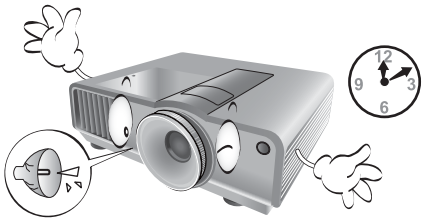

11. The lamp becomes extremely hot during operation. Allow the projector to cool for approximately 45 minutes prior to removing the lamp assembly for replacement.

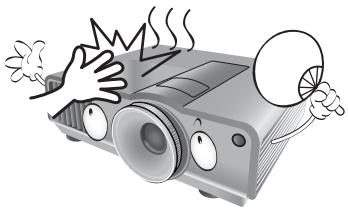

12. This projector is capable of displaying inverted images for ceiling mount installation. Use only BenQ's Ceiling Mount Kit for mounting.

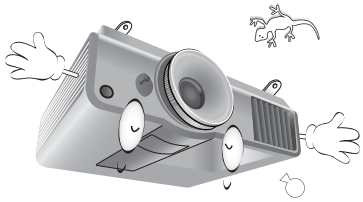

13. Never attempt to replace the lamp assembly until the projector has cooled down and is unplugged from the power supply.

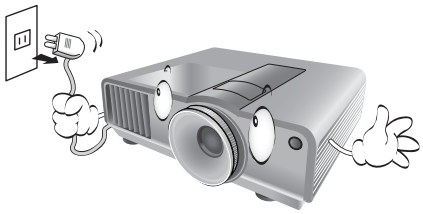

14. When you think service or repair is required, take the projector only to a suitably qualified technician.

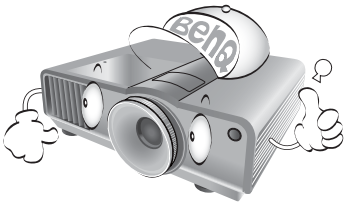

15. Do not attempt to disassemble this projector. There are dangerous high voltages inside which may cause death if you should come into contact with live parts. The only user serviceable part is the lamp which has its own removable cover. See page 59.

    Under no circumstances should you ever undo or remove any other covers. Refer servicing only to suitably qualified professional service personnel.

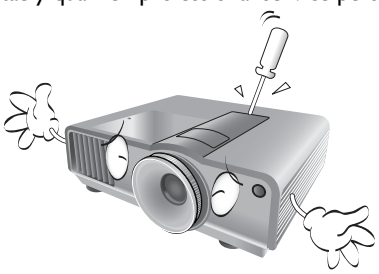

Notice

Please keep the original packing for possible future shipment. If you need to pack your projector after use, adjust the projection lens to an appropriate position, put the lens cushion around the lens, and fit the lens cushion and projector cushion together to prevent damage during transportation.

Moisture condensation

Never operate the projector immediately after moving it from a cold location to a hot location. When the projector is exposed to such a change in temperature, moisture may condense on the crucial internal parts. To prevent the projector from possible damage, do not use the projector for at least 2 hours when there is a sudden change in temperature.

Avoid volatile liquids

Do not use volatile liquids, such as insecticide or certain types of cleaner, near the projector. Do not have rubber or plastic products touching the projector for a long time. They will leave marks on the finish. If cleaning with a chemically treated cloth, be sure to follow the cleaning product's safety instructions.

Disposal

This product contains the following materials which are harmful to human bodies and environment.

- Lead, which is contained in solder.
- Mercury, which is used in the lamp.

To dispose of the product or used lamps, consult your local environment authorities for regulations.

Overview

Shipping contents

Carefully unpack and verify that you have the items below. Some of the items may not be available depending on your region of purchase. Please check with your place of purchase.

Some of the accessories may vary from region to region.

The warranty card is only supplied in some specific regions. Please consult your dealer for detailed information.

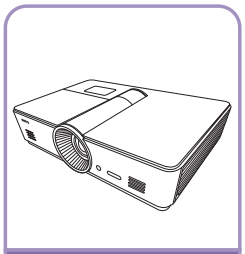
Projector

Remote control

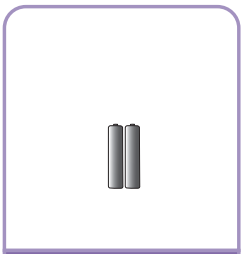
Batteries

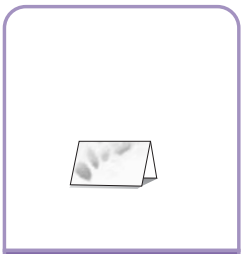
Warranty card

User manual CD

Quick start guide

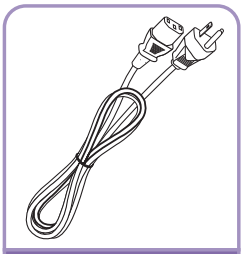
Power cable

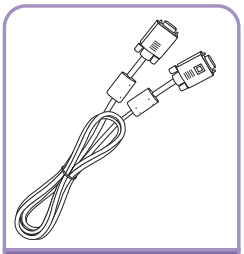
VGA cable

Remote control batteries

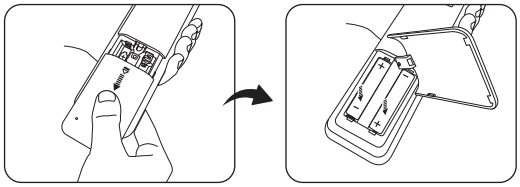

1. To open the battery cover, turn the remote control over to view its back, push on the finger grip on the cover and slide it up in the direction of the arrow as illustrated. The cover will slide off.
2. Remove any existing batteries (if necessary) and install two new AAA batteries observing the battery polarities as indicated in the base of the battery compartment. Positive (+) goes to positive and negative (-) goes to negative.
3. Refit the cover by aligning it with the case and sliding it back up into position. Stop when it clicks into place.

Notes on handling batteries

- **Do not mix old batteries with new ones, or mix different types of batteries.**
- **Avoid leaving the remote control and batteries in an excessive hot or humid environment like the kitchen, bathroom, sauna, sunroom, or in a closed car.**
- **Dispose of used batteries according to the battery manufacturer's instructions and local environment regulations for your region.**
- **If the remote control will not be used for an extended period of time, remove the batteries to avoid damage to the control from possible battery leakage.**

Remote control operation

- Make sure that there is nothing positioned between the remote control and the infrared (IR) sensors on the projector that might obstruct the IR beam from the remote control reaching the projector.
- The effective range of the remote control is up to 8 meters, and at an angle within 30 degrees from the center of the IR beam. Always aim straight at the projector, however, most screens will also reflect the IR beam to the projector.

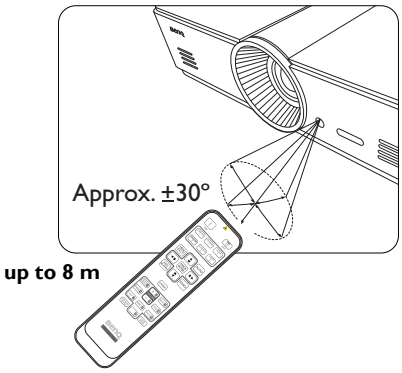

Ceiling mounting the projector

We want you to have a pleasant experience using your BenQ projector, so we need to bring this safety matter to your attention to prevent damage to person and property.

If you intend to mount your projector on the ceiling, we strongly recommend that you use a proper fitting BenQ projector ceiling mount kit and that you ensure it is securely and safely installed.

If you use a non-BenQ brand projector ceiling mount kit, there is a safety risk that the projector may fall from the ceiling due to an improper attachment through the use of the wrong gauge or length screws.

You can purchase a BenQ projector ceiling mount kit from the place you purchased your BenQ projector. BenQ recommends that you also purchase a separate Kensington lock compatible security cable and attach it securely to both the Kensington lock slot on the projector and the base of the ceiling mount bracket. This will perform the secondary role of restraining the projector should its attachment to the mounting bracket become loose.

Projector features

- **FHD resolution**

  The projector is HDTV compatible with FHD resolution, providing 1920 x 1080 pixels at its native resolution.
- **High picture quality**

  The projector provides excellent picture quality due to its high resolution, excellent home theater brightness, super high contrast ratio, vivid color and rich gray-scale reproduction.
- **Rich gray-scale**

  When viewed in a darkened environment, the automatic gamma control provides excellent gray-scale display which reveals details in shadows and in night or darkened scenes.
- **Wide variety of inputs and video formats**

  The projector supports a wide variety of inputs for connection to your video and PC equipment, including composite video, S-Video, HDMI, PC, and an output trigger for connection to automated screen and environment lighting systems.
- **3D function supported**

  The projector supports 3D format signals and allows you to enjoy 3D movies, videos, and sporting events in a more realistic way.
- **Built-in teaching template**

  The projector comes with built-in teaching templates, including letter formation, worksheet and coordinate chart, to make teaching easier.
- **Corner fit correction**

  A flexible and convenient way to correct picture distortion by adjusting each corner of an image independently when projecting on restricted or uneven space.

Projector exterior view

Front and upper side view

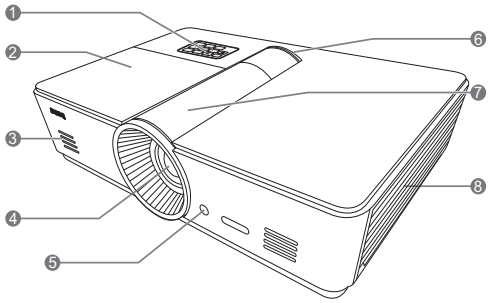

1. Control panel (See "Control panel" on page 11 for details.)
2. Lamp cover
3. Speaker Grill
4. Projection lens
5. Front IR sensor
6. LED indicator
7. Lens adjustment panel cover (See "Control panel" on page 11 for details.)
8. Vent (cold air intake)

Rear view

See "Connecting to video equipment" on page 17 for connection details.

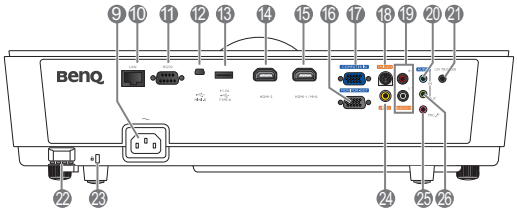

9. AC Power cable inlet
10. RJ45 LAN input jack
11. RS-232 control port
    Used to interface with a PC or home theater control/automation system.
12. Mini B type USB port
13. Type-A USB port (5V 1.5A Power)
    (For charging external device only)
14. HDMI-2 port
15. HDMI-1/MHL port
16. RGB signal output jack
17. RGB (PC)/Component video (YPbPr/YCbCr) signal input jack
18. S-Video input jack
19. RCA audio input jack
20. Audio input jack
21. 12VDC output terminal
    Used to trigger external devices such as an electric screen or light control, etc. Consult your dealer for how to connect these devices.
22. Security bar
23. Kensington lock slot
24. Video input jack
25. Microphone jack
26. Audio output jack

Under view

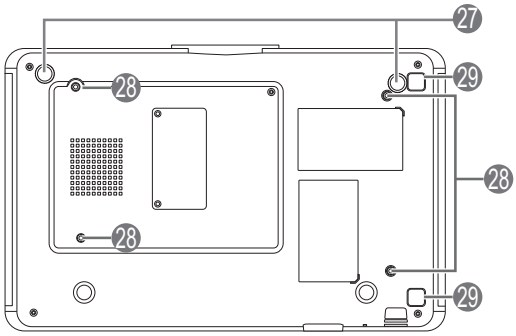

27. Adjustable feet
28. Ceiling mount holes
29. Filter cover release button
    (Filter function is available only for models with pre-installed filter)

Controls and functions

Control panel

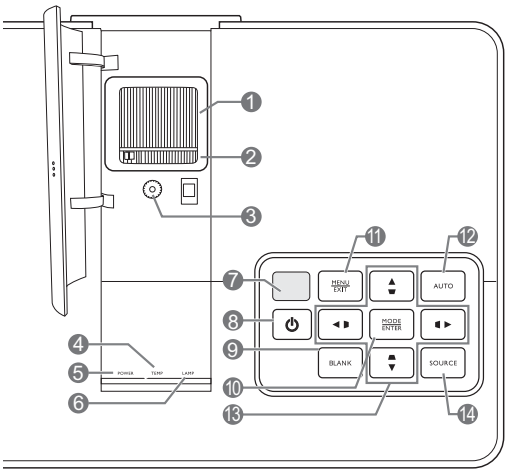

1. **Focus ring**
   Adjusts the focus of the projected image.
2. **Zoom ring**
   Adjusts the size of the projected image.
3. **Lens shift ring**
   Adjusts the position of the projected image.
4. **TEMPerature warning light**
   Lights up or flashes if the projector's temperature becomes too high.
5. **POWER indicator light**
   Lights up or flashes when the projector is operating.
6. **LAMP indicator light**
   Lights up or flashes when the projector lamp has developed a problem.
7. **Top IR sensor**
8. **⏻ POWER**
   Performs the same action as **POWER** on the remote control.

   Toggles the projector between standby and on.
9. **ECO BLANK**
   Used to hide the screen image.
10. **MODE/ENTER**
    When On-Screen Display (OSD) is off, sequentially selects a predefined picture setting available for each input.

    When OSD is on, enacts to selected OSD menu item.
11. **MENU/EXIT**
    Toggles the On-Screen Display (OSD) menu on and off.

    Goes back to previous OSD menus, exits and saves any changes made using the On-Screen Display (OSD) menu.
12. **AUTO**
    Automatically determines the best picture timings for the displayed image.
13. **Arrow/Keystone keys (Left ◄/⊐, Up ▲/⊏, Right ►/⊏, Down▼/⊐)**
    Moves the current On-Screen Display (OSD) menu selection in the direction of the arrow being pressed when the OSD menu is activated.

    Manually corrects distorted pictures resulting from an angled projection.
14. **SOURCE**
    Performs the same action as the source selection keys on the remote control.

    Switches sequentially through input sources.

Remote control

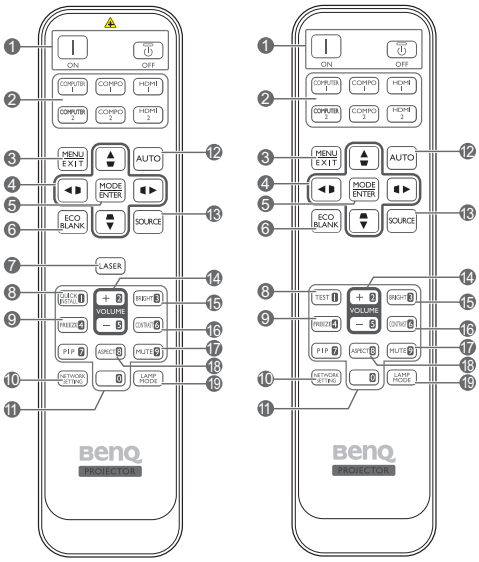

For Japan region only

1. Power **ON/OFF**
   Toggles the projector between standby mode and on.
2. **Source selection keys**
   Selects an input source for display.
3. **MENU/EXIT**
   Turns on the On-Screen Display (OSD) menu. Goes back to previous OSD menu, exits and saves menu settings.
4. **Arrow/Keystone keys (Left ◀/▷, Up ▲/▱, Right ▶/◁, Down▼/▱)**
   Moves the current On-Screen Display (OSD) menu selection in the direction of the arrow being pressed when the OSD menu is activated.

   Manually corrects distorted pictures resulting from an angled projection.
5. **MODE/ENTER**
   Activates the selected On-Screen Display (OSD) menu item.

   Depending upon the input signal in use, selects an available picture mode.
6. **ECO BLANK**
   Used to hide the screen image.
7. **LASER**
   Emits visible laser pointer light for presentation purposes.

   Not available for Japan region.
8. **QUICK INSTALL**
   Displays the quick install page.

   This key is "TEST" for remote controls in the Japan region. Its function is the same as Quick Install.
9. **FREEZE**
   Freezes the projected image.
10. **NETWORK SETTING**
    Enters network settings directly.
11. **Numeric buttons**
    Enters numbers in network settings.

    Numeric buttons 1, 2, 3, 4 cannot be pressed when asked to enter password.
12. **AUTO**
    Automatically determines the best picture timings for the displayed image.
13. **SOURCE**
    Selects an input source for display.
14. **VOLUME+/VOLUME-**
    Adjusts the sound level.
15. **BRIGHTNESS**
    Adjusts brightness.
16. **CONTRAST**
    Adjusts contrast.
17. **MUTE**
    Toggles projector audio between on and off.
18. **ASPECT**
    Selects the display aspect ratio.
19. **LAMP MODE**
    Selects a preferred lamp mode.

Operating the LASER pointer

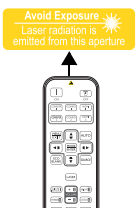

The Laser Pointer is a presentation aid for professionals. It emits red colored light when you press it and the indicator lights up red.

The laser pointer is not a toy. Parents should be mindful of the dangers of laser energy and keep this remote control out of the reach of children.

Do not look into the laser light window or shine the laser light beam on yourself or others. See the warning messages on the back of the remote control prior to using it.

- **PIP is not available for this model.**
- **COMPUTER 2 and COMPO 2 key functions are not available for this model.**

Positioning your projector

Choosing a location

Your projector is designed to be installed in one of four possible installation locations.

Your room layout or personal preference will dictate which installation location you select. Take into consideration the size and position of your screen, the location of a suitable power outlet, as well as the location and distance between the projector and the rest of your equipment.

1. Front:

Select this location with the projector placed near the floor in front of the screen. This is the most common way to position the projector for quick setup and portability.

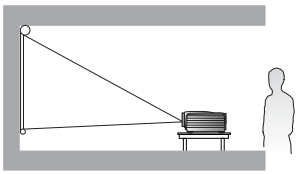

2. Front Ceiling:

Select this location with the projector suspended from the ceiling in front of the screen.

Purchase the BenQ Projector Ceiling Mount Kit from your dealer to mount your projector on the ceiling.

***Set Front Ceiling after you turn the projector on.**

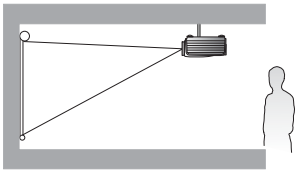

3. Rear:

Select this location with the projector placed near the floor behind the screen.

Note that a special rear projection screen is required.

***Set Rear after you turn the projector on.**

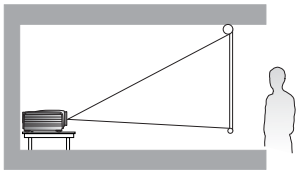

4. Rear Ceiling:

Select this location with the projector suspended from the ceiling behind the screen.

Note that a special rear projection screen and the BenQ Projector Ceiling Mount Kit are required for this installation location.

***Set Rear Ceiling after you turn the projector on.**

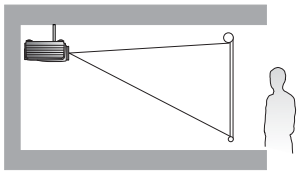

***To set the projector position:**

1. **Press MENU/EXIT and then press ◀/▶ until the System Setup: Basic menu is highlighted.**
2. **Press ▲/▼ to highlight Projector Installation and press ◀/▶ until the correct position is selected.**

Obtaining a preferred projected image size

The distance from the projector lens to the screen, the zoom setting, and the video format each factors in the projected image size. The diagram from page 15 offers recommendations on projection distances and screen sizes.

This projector is equipped with a movable lens. See "Shifting the projection lens" on page 16 for details. You can see the diagram from page 15 for the vertical offset values in the dimension tables that are measured when the lens is shifted fully up or down.

If you place the projector in a different position (to that recommended), you will have to tilt it down or up to center the image on the screen. In these situations, some image distortion will occur. Use the Keystone function to correct the distortion. See "Correcting picture distortion" on page 28 for details.

Projection dimensions

Installation for a 16:9 ratio screen

Floor Installation

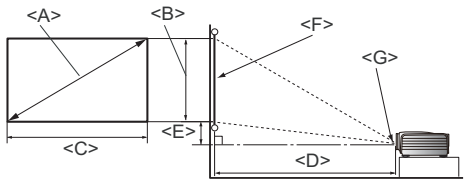

<F>: Screen **<G>: Center of lens**

Ceiling Installation

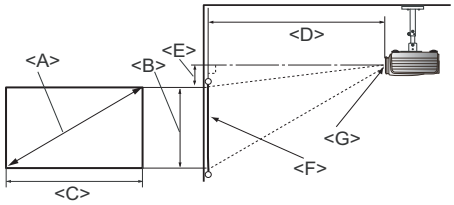

<F>: Screen **<G>: Center of lens**

■ **The screen aspect ratio is 16:9 and the projected picture is 16:9**

Screen dimensions			Projection distance <D> [cm]			Lowest/ Highest lens position <E> [cm]
Diagonal <A> [inch (mm)]	Height <B> [cm]	Width <C> [cm]	Min distance	Average	Max distance	
40 (1016)	50	87	103	118	133	7.5
50 (1270)	62	111	128	148	167	9.3
60 (1524)	75	133	154	177	200	11.2
70 (1778)	87	155	180	206	233	13.1
80 (2032)	100	177	205	236	266	14.9
90 (2286)	112	199	231	265	300	16.8
100 (2540)	125	221	256	295	333	18.7
110 (2794)	137	244	282	324	366	20.5
120 (3048)	150	266	307	353	399	22.4
130 (3302)	162	288	333	383	433	24.3
140 (3556)	174	310	358	412	466	26.2
150 (3810)	187	332	384	442	499	28.0
160 (4064)	199	354	410	471	532	29.9
170 (4318)	212	376	435	501	566	31.8
180 (4572)	224	399	461	530	599	33.6
190 (4826)	237	421	486	559	632	35.5
200 (5080)	249	443	512	589	666	37.4
250 (6350)	311	554	640	736	832	46.7
300 (7620)	374	664	768	883	998	56.0

If you have a 16:9-aspect-ratio screen and your measured projection distance was 5.0 m (500 cm), the closest match in the "Average" column is 501 cm. Looking across this row shows that a 170-inch screen is required.

Checking the min and max projection distance values in the columns of "Projection distance <D> [cm]" indicates that the 5.0 m measured projection distance will also fit the 160-inch screen, as well as 180 to 190-inch size screens. The projector can be adjusted (using the zoom control) to display on these different screen sizes at the projection distance.

The above numbers are approximate and may be slightly different from the actual measurements. Only the recommended screen sizes are listed. If your screen size is not in the table above, please contact your dealer for assistance.

Shifting the projection lens

The lens shift control provides flexibility for installing your projector. It allows the projector to be positioned off the center of the screen.

The lens shift is expressed as a percentage of the projected image height or width. It is measured as an offset from the projected image's vertical or horizontal center. You can shift the projection lens in vertical directions within the allowable range depending on your desired image position. The maximum vertical shift for this projector is 3% from the vertical center. Horizontal shift is not available.

To shift the lens vertically:

1. Press down lightly on the lens adjustment panel cover switch (indicated by the three dots) to click it open.
2. Lift the lens adjustment panel cover up.
3. Turn the lens shift ring to adjust the projected image position.
4. When done, press down and click close the lens adjustment panel cover.

- **When the screen position is fixed**

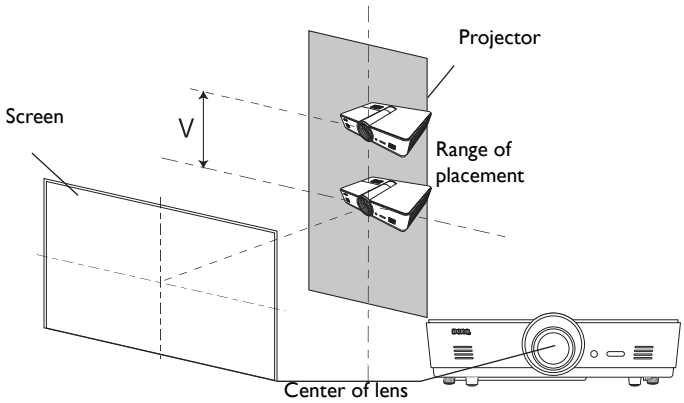

- **When the projector position is fixed**

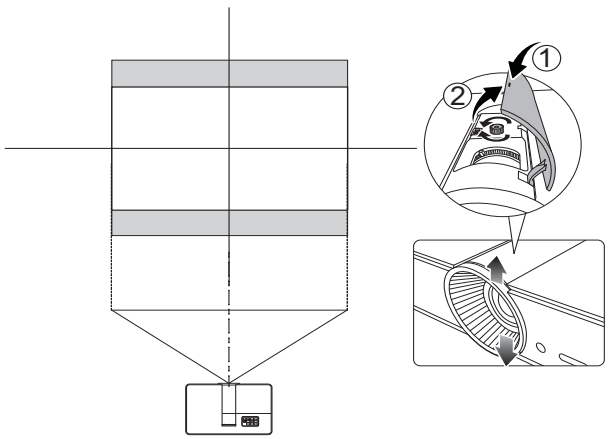

- **Lens shift adjustment will not result in a degraded picture quality. In the unlikely event that the image distortion is produced, see "Adjusting the projected image" on page 27 for details.**

Connecting to video equipment

You can connect the projector to any type of video equipment, such as a DVD or Blu-ray player, digital tuner, cable or satellite decoder, video game console or digital camera. You can also connect it to a desktop PC, a laptop PC, or Apple Macintosh system. You can connect the projector to a source device using just one of the connecting methods; however, each provides a different level of video quality. The method you choose will most likely depend upon the availability of matching terminals on both the projector and the video source device as described below:

Terminal name	Terminal appearance	Reference	Picture quality
HDMI/MHL		"Connecting HDMI devices" on page 17 "Connecting MHL devices" on page 18	Best
S-Video		"Connecting S-Video devices" on page 18	Good
Video		"Connecting video devices" on page 19	Normal
Computer (D-SUB)		"Connecting a computer" on page 20	Better

Preparations

When connecting a signal source to the projector, be sure to:

1. Turn off all equipment before making any connections.
2. Use only the correct type cables for each source with proper type plugs.
3. Ensure that all cable plugs are firmly fitted to the equipment jacks.

Note that all cables shown in the following connection diagrams may not be supplied with the projector (See "Shipping contents" on page 6 for details). Most cables are commercially available from electronics stores.

Connecting HDMI devices

HDMI (High-Definition Multimedia Interface) supports uncompressed video data transmission between compatible devices like DTV tuners, DVD or Blu-ray players and displays over a single cable. It provides pure digital viewing and listening experience. You should use an HDMI cable when making connection between the projector and HDMI devices.

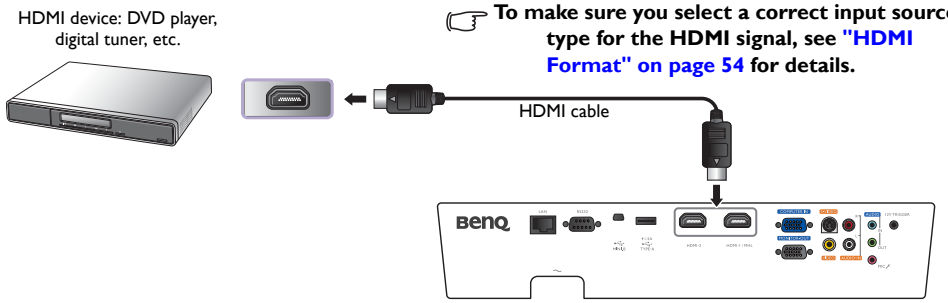

To make sure you select a correct input source type for the HDMI signal, see "HDMI Format" on page 54 for details.

Connecting MHL devices

MHL (Mobile High-definition Link) supports uncompressed HD video (1080/30p) and audio (7.1 surround sound) transmission between compatible devices like smartphones, tablets and other mobile devices. It provides pure digital viewing and listening experience. You should use an MHL cable when making connection between the projector and MHL devices.

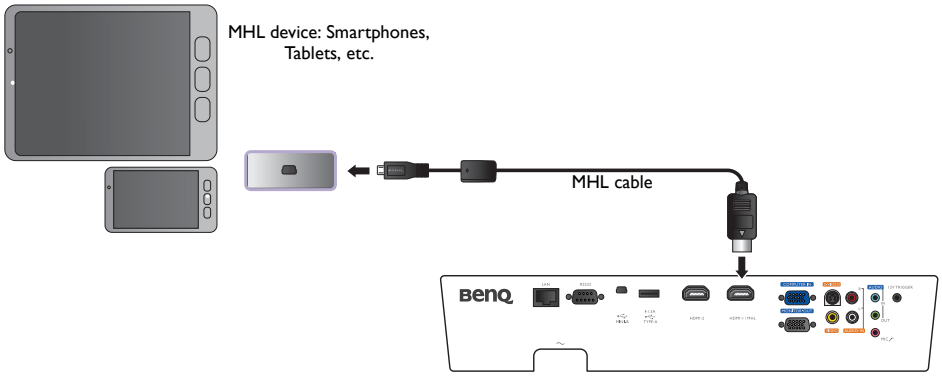

Not all mobile devices are MHL compatible. Consult with you mobile device manufacturer to verify MHL compatibility of your device.

Connecting S-Video devices

Connect the projector to your S-Video device with an S-Video cable. The audio connections are provided for informational purposes only. You can also connect a separate audio cable to a suitable audio amplifier.

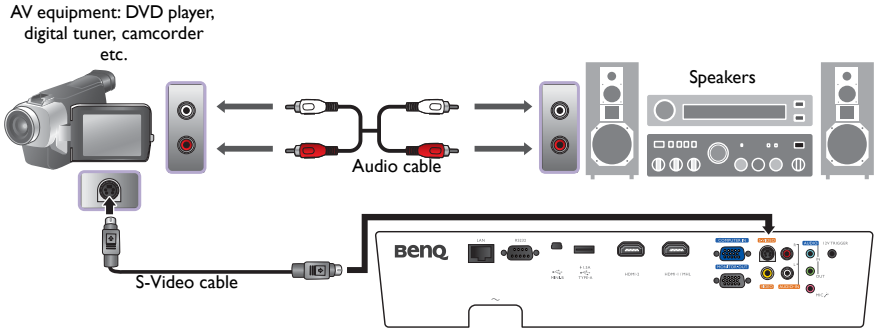

Connecting video devices

The audio connections are provided for informational purposes only. You can also connect the separate audio cable to a suitable audio amplifier.

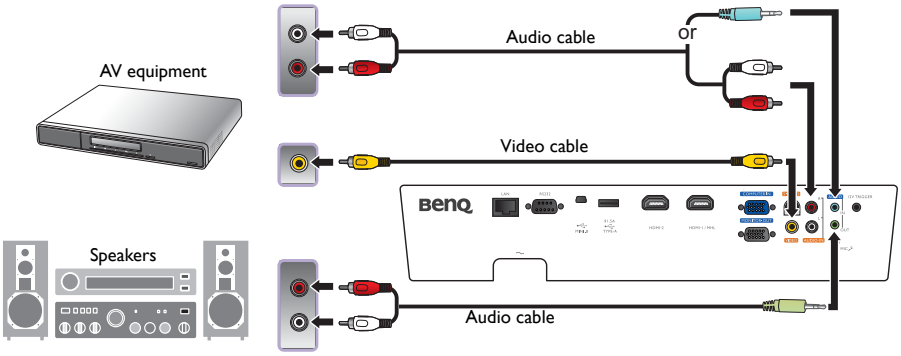

- **If you have already made a Component Video connection between the projector and the video source device, you need not connect to this device again using a composite Video connection as this makes an unnecessary second connection of poorer picture quality.**
- **If the selected video image is not displayed after the projector is turned on and the correct video source has been selected, please check that the video source device is turned on and operating correctly. Also check that the signal cables have been connected correctly.**

Connecting a computer

Connect the projector to a computer with a VGA cable.

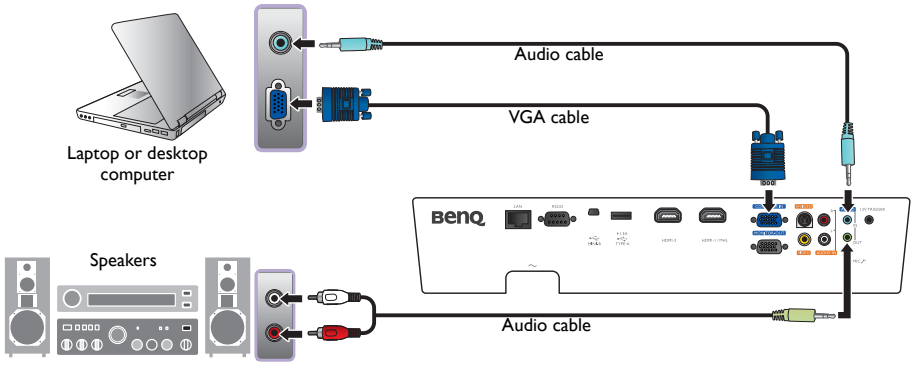

Many laptops do not turn on their external video ports when connected to a projector. Usually a key combination like Fn + F3 or CRT/LCD key turns the external display on/off. Locate a function key labeled CRT/LCD or a function key with a monitor symbol on the laptop. Press Fn and the labeled function key simultaneously. Refer to your laptop's documentation to discover your laptop's key combination.

Connecting a monitor

If you want to view your presentation close-up on a monitor as well as on the screen and the **MONITOR OUT** jack is available on your projector, you can connect the **MONITOR OUT** signal output jack on the projector.

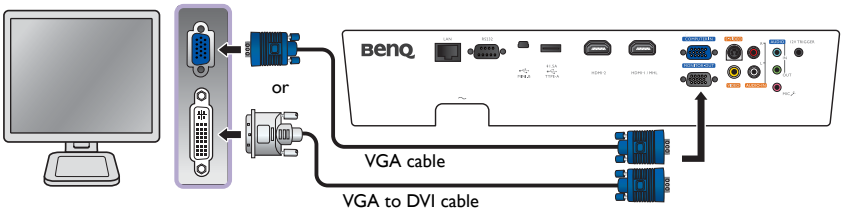

- **The MONITOR OUT only works when an appropriate D-Sub input is made to the PC jack.**
- **If you wish to use this connection method when the projector is in standby mode, make sure the Monitor Out function is turned on in the System Setup: Advanced menu. See "Monitor Out" on page 57 for details.**

Using the projector

Preparations

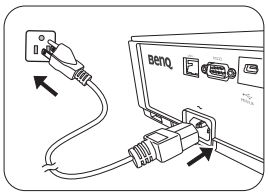

1. Plug in and turn all of the connected equipment on.
2. If not already in, plug the supplied power cable into the AC inlet on the rear of the projector.
3. Plug the power cable into a wall power outlet and turn the wall switch on.

Please use the original accessories (e.g. power cable) only with the device to avoid possible dangers such as electric shock and fire.

Turning the projector on

Follow the steps below

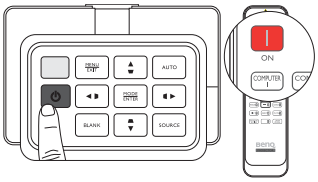

1. Make sure the Power light is orange after power has been applied.
2. Press **POWER** on the projector or **ON** on the remote control to start the projector. As soon as the lamp lights up, a "**Power On Tone**" will be heard.

   To turn off the ring tone, see "Turning off the Power On/Off Ring Tone" on page 39 for details.
3. The fans will start operating, and a start-up image will be displayed on the screen for a few seconds while it warms up.

   The projector will not respond to further commands while it is warming up.
4. If you are prompted for a password, press the arrow keys to enter a six-digit password. See "Utilizing the password function" on page 24 for details.
5. Press one of the Source keys on the remote control, or press **SOURCE** on the projector repeatedly until your desired signal is selected. See "Selecting an input source" on page 22 for details.
6. If the horizontal frequency of the input source exceeds the range of the projector, the message "No Signal" will be displayed on the screen. This message will remain on-screen until you change the input source to an appropriate one.

If you attempt to re-start the projector shortly after shutdown, the fans may run for a few minutes to cool down. Press ⏻ Power again to start the projector after the fans stop and the Power indicator light turns orange.

Selecting an input source

The projector can be connected to multiple equipment at the same time. When the projector is first turned on, it will attempt to reconnect with the input source which was in use when the projector was last shut down.

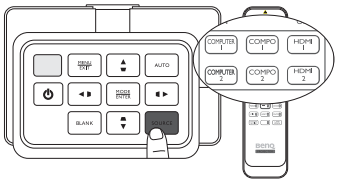

To select the video source:

- **Using the remote control**

Press one of the Source keys on the remote control.

- **Using the OSD menu**

Press SOURCE and then press ▲/▼ until your desired signal is selected and press MODE/ENTER.

Once detected, the selected source information will be displayed on the screen for seconds. If there are multiple pieces of equipment connected to the projector, you can go back to the source selection bar again to search for other signals.

- **Using Quick Search**

If you want the projector to automatically search for the signals:

1. Press **MENU/EXIT** to turn the OSD menu on.
2. Press ◄/► to highlight the **Source** menu.
3. Press ▼ to highlight **Quick Search** menu.
4. Press ◄/► to toggle the function **On**.

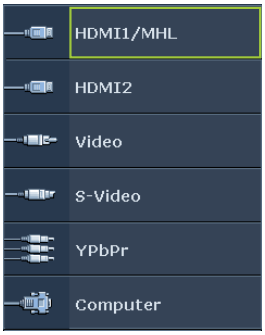

NOTE: When automatically searching for a valid input source, the projector cycles through the available signals following the sequence from top to bottom as the source selection bar shows.

Using the menus

The projector is equipped with multilingual On-Screen Display (OSD) menus for making various adjustments and settings.

Below is the overview of the OSD menu.

The OSD screenshots below are for reference only, and may differ from the actual design.

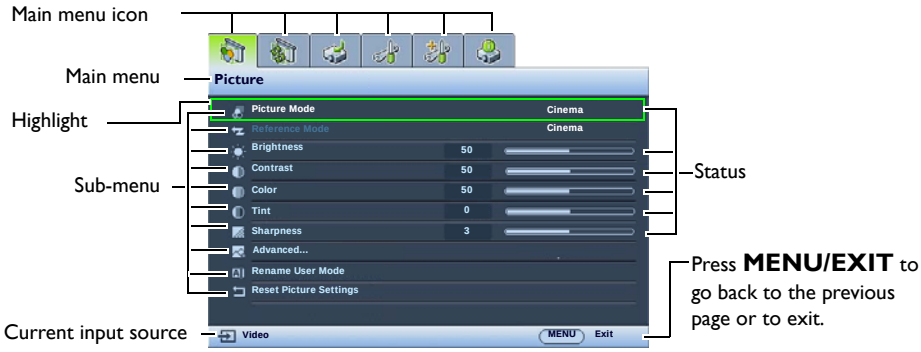

To use the OSD menus, please set the OSD menu to your familiar language.

1. Press **MENU/EXIT** to turn the OSD menu on.

2. Use ◄/► to highlight the **System Setup: Basic** menu.

3. Press ▼ to highlight **Language** and press **MODE/ENTER**, and the language list is displayed.

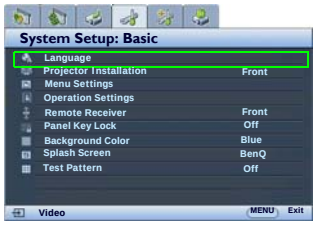

4. Press ▲/▼/◄/► to select a preferred language and press **MODE/ENTER**.

5. Press **MENU/EXIT** twice* to leave and save the settings.

***The first press leads you back to the main menu and the second press closes the OSD menu.**

Securing the projector

Using a security cable lock

The projector has to be installed in a safe place to prevent theft. Otherwise, purchase a lock, such as the Kensington lock, to secure the projector. You can locate a Kensington lock slot on the projector. See item 23 on page 9 for details.

A Kensington security cable lock is usually a combination of key(s) and the lock. Refer to the lock's documentation for finding out how to use it.

Utilizing the password function

For security purposes and to help prevent unauthorized use, the projector includes an option for setting up password security. The password can be set through the On-Screen Display (OSD) menu. Once the password is set and this function is selected, the projector is password-protected. Users who do not know the correct password can not use the projector.

You will be inconvenienced if you activate the password functionality and subsequently forget the password. Print out this manual (if necessary) and write the password you used in this manual, and keep the manual in a safe place for later recall.

Setting a password

Once a password has been set and the Power On Lock is activated, the projector cannot be used unless the correct password is entered every time the projector is started.

1. Press **MENU/EXIT** and then press ◄/► until the **System Setup: Advanced** menu is highlighted.
2. Press ▼ to highlight **Security Settings** and press **MODE/ENTER**.
3. Press ▼ to highlight **Power On Lock** and press ◄/► to toggle **Power On Lock** on, the input password page appears.
4. As the picture indicates, the four arrow keys (▲, ►, ▼, ◄) respectively represent 4 digits (1, 2, 3, 4). According to the password you desire to set, press the arrow keys on the remote control or projector to enter six digits for the password.
   If the function is used for the first time, enter the default password (1, 1, 1, 1, 1, 1) of the projector by pressing the arrow key ▲ six times.
   Once the password is set, the OSD menu returns to the **Security Settings** page.

   IMPORTANT: The digits being input will be displayed as asterisks on-screen. Write your selected password down here in this manual in advance or right after the password is entered so that it is available to you should you ever forget it.
   Password: _ _ _ _ _ _
5. To leave the OSD menu, press **MENU/EXIT**.

If you forget the password

If the password function is activated, you will be asked to enter the six-digit password every time you turn on the projector. If you enter the wrong password, the password error message is displayed lasting for three seconds, and the Input Password page follows. You can retry by entering another six-digit password, or if you did not record the password in this manual, and you absolutely do not remember it, you can use the password recall procedure. See "Entering the password recall procedure" on page 25 for details.

If you enter an incorrect password 5 times in succession, the projector will automatically shut down in a short time.

Entering the password recall procedure

1. Make sure the **Input Password** page is displayed on screen. Press **AUTO**. The projector will display a coded number on the screen.
2. Write down the number and turn off your projector.
3. Seek help from the local BenQ service center to decode the number. You may be required to provide proof of purchase documentation to verify that you are an authorized user of the projector.

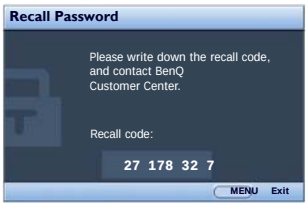

Changing the password

1. In the **System Setup: Advanced** > **Security Settings** menu, press ▲/▼ to highlight **Change Password** and press **MODE/ENTER**. The **Change Password** page is displayed.
2. Enter the old password.
   - If the password is correct, the message "**Input New Password**" is displayed.
   - If the password is incorrect, the password error message is displayed lasting for three seconds, and the message "**Input Current Password**" is displayed for your retry. You can press **MENU/EXIT** to cancel the change or try another password.
3. Enter a new password.

   IMPORTANT: The digits being input will be displayed as asterisks on-screen. Write your selected password down here in this manual in advance or right after the password is entered so that it is available to you should you ever forget it.

   Password: __ __ __ __ __ __
   Keep this manual in a safe place.
4. Confirm the new password by re-entering the new password.
5. You have successfully assigned a new password to the projector. Remember to enter the new password next time the projector is started.
6. To leave the OSD menu, press **MENU/EXIT**.

Disabling the password function

To disable password protection, go back to the **System Setup: Advanced** > **Security Settings** menu. Highlight **Power On Lock** and select **Off** by pressing ◄ /► . The message "**Input Password**" is displayed. Enter the current password.

- If the password is correct, the OSD menu returns to the **Power On Lock** page with "**Off**" shown in the row of **Password**. You will not have to enter the password next time when turning on the projector.
- If the password is incorrect, the password error message is displayed lasting for three seconds, and the message "**Input Password**" is displayed for your retry. You can press **MENU/EXIT** to cancel the change or try another password.

Though the password function is disabled, you need to keep the old password in hand should you ever need to re-activate the password function by entering the old password.

Adjusting the projected image

Adjusting the projection angle

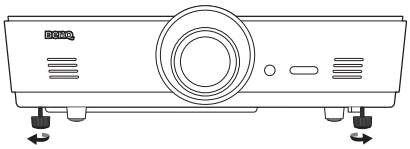

There are two adjuster feet on the bottom of the projector. These can be used if necessary to change the projection angle. Screw the feet in or out as appropriate to aim and level the projection angle.

If the screen and the projector are not perpendicular to each other, the projected image becomes vertical trapezoidal. To correct this problem, see "Correcting picture distortion" on page 28 for details.

Auto-adjusting the image

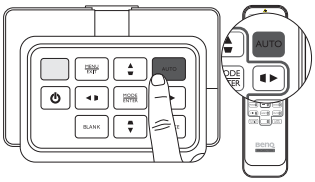

In some cases, you may need to optimize the picture quality. To do this, press AUTO. Within 3 seconds, the built-in Intelligent Auto Adjustment function will re-adjust the values of Frequency and Clock to provide the best picture quality.

The current source information will be displayed in the corner of the screen for 3 seconds.

This function is only available when a PC signal (analog RGB) is selected.

Fine-tuning the image size and clarity

1. Adjust the projected picture to the size that you need using the zoom ring.

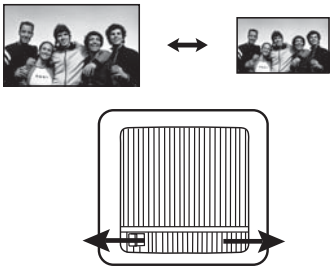

2. Sharpen the picture by rotating the focus ring.

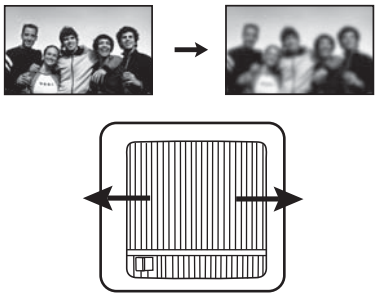

Correcting picture distortion

Keystoning occurs when the projector is not perpendicular to the screen and is where the projected picture displays visible as a trapezoid shape like either of the following:

- Two parallel sides (left and right, or top and bottom) but is noticeably wider on either side.
- No parallel sides.

To correct the picture's shape, you can perform the following steps.

1. Adjust the projection angle. Move the projector to be in front of the center of the screen with the center of the lens level with the screen.
2. If the picture is still distorted, or the projector is unable to be positioned as described above, you will need to manually correct the picture by using the **2D Keystone** and **Corner Fit** functions.

The 2D Keystone function is closely related to the Corner Fit function as both make adjustments to correct picture distortion. When correcting picture distortion, use the following procedure to adjust 2D Keystone and Corner Fit functions in order to achieve the best picture shape:

1. Use **2D Keystone** function to adjust the picture roughly to the correct shape.
2. Use **Corner Fit** funtion to fine tune the corners to acheive best picture shape.
3. If optimal effect cannot be achieved using **Corner Fit**, reset **2D Keystone** and repeat steps 1 and 2.

☞ **2D Keystone and Corner Fit functions are closely correlated, when 2D Keystone is over adjusted, the adjustment range for Corner Fit will be limited.**

Using 2D Keystone function

- **Using the remote control or projector**

i. Press one of the Arrow/Keystone keys (Left ◀/▷, Up ▲/▱, Right ▶/◁, Down▼/▱) to display the **2D Keystone** page.

ii. See step iii below for further operation.

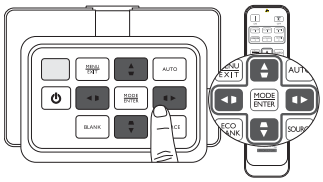

- **Using the OSD menu**

i. Press **MENU/EXIT** and then press ◀/▶ until the **Display** menu is highlighted.

ii. Press ▼ to highlight **2D Keystone** and press **MODE/ENTER**. The **2D Keystone** page is displayed.

iii. Press the key whose keystone icon is opposite to the shape of the projected picture. Continue pressing the same key or press the other keys until you are satisfied with the shape.
The values on the lower portion of the page change while pressing. When the values reach their maximum or minimum with repeated key presses, the picture's shape will stop changing. You will not be able to change the picture further in that direction.

iv. If desired picture shape cannot be achieved, press **MODE/ENTER** to reset **2D Keystone** value and repeat the previous step.

☞ **When resetting 2D Keystone, both 2D Keystone and Corner Fit values will return to default value.**

v. When done, press **MENU/EXIT** to go back to the previous page.

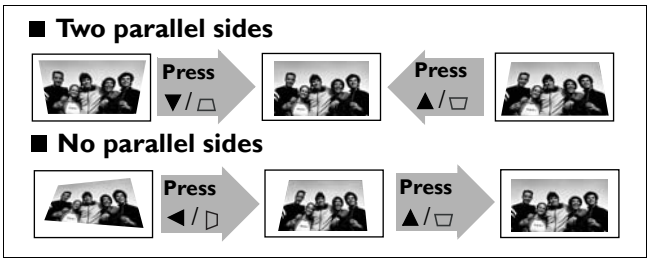

Using Corner Fit function

Manually adjust four corners of the image by setting the horizontal and vertical values.

1. Press **MENU/EXIT** and then press ◀/▶ until the **DISPLAY** menu is highlighted.
2. Press ▼ to highlight **Corner Fit** and press **MODE/ENTER**. The **Corner Fit** correction page displays.
3. Press ▲/▼ /◀ /▶ to select one corner and press **MODE/ENTER**.

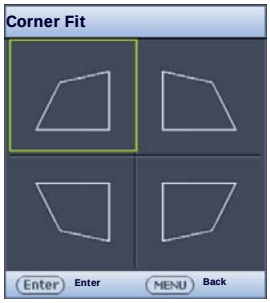

4. Press ◀/▶ to adjust horizontal values.
5. Press ▲/▼ to adjust vertical values.
6. If optimal effect cannot be achieved, press **MODE/ENTER** to reset **Corner Fit** value and repeat steps 4 and 5.

☞ **When resetting any one corner of the Corner Fit function, all corners will return to default value.**

7. When done, press **MENU/EXIT** to go back to the previous page.

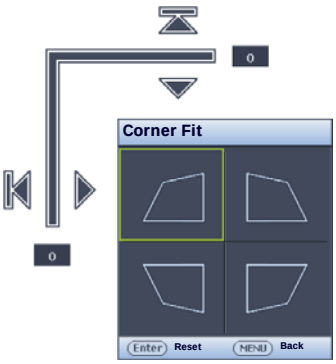

Using the preset and user modes

Selecting a preset mode

The projector is preset with several pre-defined picture modes so that you can choose one to suit your operating environment and input source picture type.

To select a picture mode that suits your need:

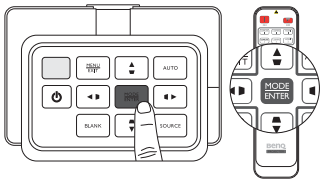

- Press **MODE/ENTER** repeatedly until your desired mode is selected.
- **Using the OSD menu**

1. Press **MENU/EXIT** and then press ◀/▶ until the **Picture** menu is highlighted.
2. Press ▼ to highlight **Picture Mode**.
3. Press ◀/▶ until your desired mode is selected.

These modes consist of preset values suitable for various projection situations as described below:

- **Bright**: Maximizes the brightness of the projected image. This mode is suitable for environments where extra-high brightness is required, such as using the projector in well lit rooms.
- **Presentation**: Is designed for presentations. The brightness is emphasized in this mode to match PC and notebook coloring.
- **sRGB**: Maximizes the purity of RGB colors to provide true-to-life images regardless of brightness setting. It is most suitable for viewing photos taken with an sRGB compatible and properly calibrated camera, and for viewing PC graphic and drawing applications such as AutoCAD.
- **Cinema**: Is appropriate for playing colorful movies, video clips from digital cameras or DVs through the PC input for best viewing in a blackened (little light) environment.
- **3D**: This projector supports playing three-dimensional (3D) content transferred through your 3D-compatible video devices and contents, such as game consoles (with 3D game discs), 3D Blu-ray players (with 3D Blu-ray discs), 3D TV (with 3D channel), and so on.

When watching 3D contents:

- **The image may seem misplaced, however, this is not a product malfunction.**
- **Take appropriate breaks when watching 3D content.**
- **Stop watching 3D content if you feel fatigue or discomfort.**
- **Keep a distance from the screen of about three times the effective height of the screen when watching 3D content.**
- **Children and people with a history of oversensitivity to light, heart problems, or have any other existing medical condition should be refrained from watching 3D content.**

- **User 1**/**User 2**: Recalls the customized settings. See "Setting the User 1/User 2 mode" on page 31 for details.

Fine-tuning the selected picture mode

The pre-defined picture mode settings can be altered via the available items shown in the **Picture** menu.

To fine-tune the picture mode:

1. Press **MENU/EXIT** and then press ◀/▶ until the **Picture** menu is highlighted.
2. Press ▼ to highlight the item you want to adjust and press ◀/▶ to set your desired value. Your selection is automatically stored in the projector and associated with that input source.

   See "Fine-tuning the picture quality" on page 32 and "Advanced picture quality controls" on page 33 for details.

Each time you change the picture mode, the projector also changes the setting to the one which was last set for that particular picture mode on that particular input. If you change the input source, the most recently used picture mode and settings for that input and resolution will be restored.

Setting the User 1/User 2 mode

There are two user-definable modes if the current available picture modes are not suitable for your need. You can use one of the picture modes (except the selected User mode) as a starting point and customize the settings.

1. In the **Picture** menu, highlight **Picture Mode** and press ◀/▶ to select **User 1** or **User 2** mode.
2. Press ▼ to highlight **Reference Mode**.

This function is only available when User 1 or User 2 mode is selected up in the Picture Mode sub-menu item.

3. Press ◀/▶ to highlight a picture mode that is closest to your need.
4. Press ▼to select a sub-menu item to be changed and adjust the value with ◀/▶. See "Fine-tuning the picture quality" on page 32 and "Advanced picture quality controls" on page 33 for details.
5. When all settings have been done, press **MENU/EXIT** to save and leave the settings.

Renaming user modes

You can change User 1 and User 2 to the names easy to be identified or understood by the users of this projector. The new name can be up to 12 characters including English letters (A-Z, a-z), digits (0-9), and space (_).

To rename user modes:

1. Make sure you have selected **User 1** or **User 2** as your picture mode.

If you are not under User 1 or User 2 mode, the projector will automatically select User 1 as the user mode to rename.

2. In the **Picture** menu, highlight **Rename User Mode** and press **MODE/ENTER** to display the virtual keypad.
3. Use ▲/▼/◀/▶ and **ENTER** keys to select the letters on the virtual keypad to type in desired name.
4. When done, press **MENU/EXIT** to leave the virtual keypad.

Resetting the picture mode

All of the adjustments you've done in the **Picture** menu can be returned to the factory preset values with a key press on the highlight of **Reset**.

To reset the picture mode to the preset factory values:

1. In the **Picture** menu, highlight **Picture Mode** and press ◀/▶ to select the picture mode (including **User 1** or **User 2**) you want to reset.
2. Press ▼ to highlight **Reset Picture Settings** and press **MODE/ENTER**.
3. Press ▲/▼ to select **Current** or **All** Picture modes and press **MODE/ENTER**. The confirmation message is displayed.
4. Press ◀/▶ to highlight **Reset** and press **MODE/ENTER**. The picture mode will return to the factory preset settings.
5. Repeat steps 1-4 if you want to reset other picture modes.

Do not confuse the Reset Picture Settings function here with the Reset All Settings in the System Setup: Advanced menu. The Reset All Settings function returns most of the settings to the factory preset values system wide. See "Reset All Settings" on page 57 for details.

Fine-tuning the picture quality

No matter what picture mode you have selected, you are able to fine-tune those settings to fit every presentation purpose. Those adjustments will be saved to the preset mode you are at when you exit the OSD menu.

Adjusting Brightness

Highlight **Brightness** in the **Picture** menu and adjust the values by pressing ◀/▶ on the projector or remote control.

The higher the value, the brighter the picture. And the lower the setting, the darker the picture. Adjust this control so the black areas of the picture appear just as black and that detail in the dark areas is visible.

Adjusting Contrast

Highlight **Contrast** in the **Picture** menu and adjust the values by pressing ◀/▶ on the projector or remote control.

The higher the value, the greater the contrast. Use this to set the peak white level after you have previously adjusted the Brightness setting to suit your selected input and viewing environment.

Adjusting Color

Highlight **Color** in the **Picture** menu and adjust the values by pressing ◀/▶ on the projector or remote control.

Lower setting produces less saturated colors; setting to the minimum value makes the image black and white. If the setting is too high, colors on the image will be overpowering, which makes the image unrealistic.

Adjusting Tint

Highlight **Tint** and adjust the values by pressing ◀/▶ on the projector or remote control.

The higher the value, the more greenish the picture becomes. The lower the value, the more reddish the picture becomes.

Adjusting Sharpness

Highlight **Sharpness** and adjust the values by pressing ◀/▶ on the projector or remote control.

The higher the value, the sharper the picture becomes. The lower the value, the softer the picture becomes.

The Brightness, Contrast functions can also be accessible by pressing BRIGHTNESS, CONTRAST on the remote control to display the adjustment bar and then you can press ◀/▶ to adjust the values.

Advanced picture quality controls

There are more advanced functions in the **Picture** > **Advanced...** menu to be adjusted to your preference. To save the settings, just press **MENU/EXIT** to leave the OSD menu.

Setting Black Level

Highlight **Black Level** and press ◄/► on the projector or remote control to select **0 IRE** or **7.5 IRE**.

The grayscale video signal is measured in IRE units. In some areas which use NTSC TV standard, the grayscale is measured from 7.5 IRE (black) to 100 IRE (white); however, in other areas where PAL equipment or Japanese NTSC standards are used, the grayscale is measured from 0 IRE (black) to 100 IRE (white). We suggest that you check the input source to see if it is with 0 IRE or 7.5 IRE, then select accordingly.

Setting Noise Reduction

You may have static or noisy projected pictures. **Noise Reduction** reduces electrical image noise caused by different media players. The higher the setting, the less the noise.

To achieve better picture clarity:

Highlight **Noise Reduction** and adjust the level by pressing ◄/► on the projector or remote control.

Selecting a color temperature*

Highlight **Color Temperature** and select a preferred setting by pressing ◄/► on the projector or remote control.

There are several color temperature settings available.

1. **Lamp Native:** With the lamp's original color temperature and higher brightness. This setting is suitable for environments where high brightness is required, such as projecting pictures in well lit rooms.
2. **Warm:** Makes pictures appear reddish white.
3. **Normal**: Maintains normal colorings for white.
4. **Cool:** Makes pictures appear bluish white.

***About color temperatures:**

There are many different shades that are considered to be "white" for various purposes. One of the common methods of representing white color is known as the "color temperature". A white color with a low color temperature appears to be reddish white. A white color with a high color temperature appears to have more blue in it.

Setting a preferred color temperature

To set a preferred color temperature:

1. Highlight **Color Temperature** and select **Cool**, **Normal**, **Warm** or **Lamp Native** by pressing ◄/► on the projector or remote control.
2. Press ▼ to highlight **Color Temperature Fine Tuning** and press **MODE/ENTER**. The **Color Temperature Fine Tuning** page is displayed.
3. Press ▲/▼ to highlight the item you want to change and adjust the values by pressing ◄/►.
   - **Red Gain**/**Green Gain**/**Blue Gain**: Adjusts the contrast levels of Red, Green, and Blue.
   - **Red Offset**/**Green Offset**/**Blue Offset**: Adjusts the brightness levels of Red, Green, and Blue.
4. To save and leave the settings, press **MENU/EXIT**.

Selecting a Gamma setting

Highlight **Gamma Selection** and select a preferred setting by pressing ◄/► on the projector or remote control.

Gamma refers to the relationship between input source and picture brightness.

- Gamma 1.6/1.8/2.0/BenQ

  Select these values according to your preference.
- Gamma 2.2

  Increases the average brightness of the picture. Best for a lit environment, meeting room or family room.
- Gamma 2.4/2.5/2.6

  Best for viewing movies in a darkened environment.
- Gamma 2.8

  Best for viewing movies which are mostly composed of dark scenes.

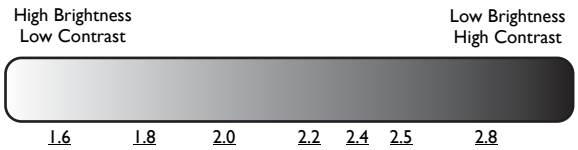

Adjusting Brilliant Color

This feature utilizes a new color-processing algorithm and system level enhancements to enable higher brightness while providing truer, more vibrant colors in picture. When set to **Off**, **Brilliant Color** is disabled.

Color Management

In most installation situations, color management will not be necessary, such as in classroom, meeting room, or lounge room situations where lights remain on, or where building external windows allow daylight into the room.

Only in permanent installations with controlled lighting levels such as boardrooms, lecture theaters, or home theaters, should color management be considered. Color management provides fine color control adjustment to allow for more accurate color reproduction, should you require it.

Proper color management can only be achieved under controlled and reproducible viewing conditions. You will need to use a colorimeter (color light meter), and provide a set of suitable source images to measure color reproduction. These tools are not provided with the projector, however, your projector supplier should be able to provide you with suitable guidance, or even an experienced professional installer.

The **3D Color Management** provides six sets (RGBCMY) of colors to be adjusted to favorite colors. When you select each color, you can independently adjust its color range and saturation according to your preference.

To adjust and store the settings:

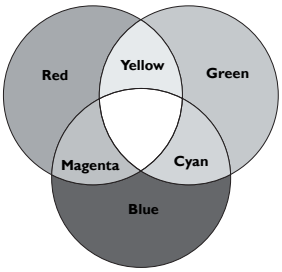

1. In the **Picture** menu, highlight **Advanced...** and press **MODE/ENTER**. Then, highlight **3D Color Management** and press **MODE/ENTER**. The **3D Color Management** page is displayed.
2. Highlight **Primary Color** and press ◄/► to select a color from among **Red**, **Green**, **Blue**, **Cyan**, **Magenta**, and **Yellow**.
3. Press ▼ to highlight **Hue** and press ◄/► to select the color range you wish to make adjustment. The bigger the range, the more proportions of its two adjacent colors the color contains.

   Please refer to the illustration to the right for how the colors relate to each other. For example, if you select **Red** and set its range at 0, only pure red is selected. Increasing its range will include both the red color close to yellow and red color close to magenta.

   Press ▼ to highlight **Saturation** and adjust the color saturation level by pressing ◄/► .

   If you select **Red** and set its range at 0, only the saturation of the pure red will be affected.

   ☞ **Saturation is the amount of that color in a video picture. Lower settings produce less saturated colors; a setting of "0" removes that color from the image entirely. If the saturation is too high, that color will be overpowering and unrealistic.**

4. To leave and save the settings, press **MENU/EXIT**.

Selecting the aspect ratio

The "aspect ratio" is the ratio of the image width to the image height. The default for this projector is 16:9 while digital TV and Blu-ray discs are usually in 16:9 ratio, and most analog TV signals and DVDs are in 4:3 ratio.

With the advent of digital signal processing, digital display devices like this projector can dynamically stretch and scale the image output to a different aspect than that of the image input source. Images can be stretched in a linear manner so the whole of the image is stretched equally, or non-linearly, which distorts the image.

To change the projected picture ratio (no matter what aspect the source is):

- **Using the remote control button**

1. Press **ASPECT** to show the current setting.
2. Press **ASPECT** repeatedly to select an aspect ratio to suit the format of the video signal and your display requirements.

- **Using the OSD menu**

1. Press **MENU/EXIT** and then press ◀/▶ until the **Display** menu is highlighted.
2. Press ▼ to highlight **Aspect Ratio**.
3. Press ◀/▶ to select an aspect ratio to suit the format of the video signal and your display requirements.

About the aspect ratio

1. **Auto**: Scales a picture proportionally to fit the projector's native resolution in its horizontal or vertical width. This makes the most use of the screen and maintains the aspect ratio of a picture when projecting images that are neither 4:3 nor 16:9 ratio.
2. **4:3**: Scales a picture so that it is displayed in the center of the screen with a 4:3 aspect ratio. This is most suitable for 4:3 pictures like computer monitors, standard definition TV and 4:3 aspect DVD movies, as it displays them without aspect alteration.
3. **16:9**: Scales a picture so that it is displayed in the center of the screen with a 16:9 aspect ratio. This is most suitable for 16:9 pictures like LCD monitors, high definition TV and 16:9 aspect DVD movies, as it displays them without aspect alteration.
4. **16:10**: Scales a picture so that it is displayed in the center of the screen with a 16:10 aspect ratio. This is most suitable for images which are already in a 16:10 aspect, as it displays them without aspect alteration.

5. **Real**: This setting displays the image in a one-to-one pixel mapping without alteration or resize in the center of the projection. This is most suitable for use with PC source inputs.

- **The black portions are inactive areas and the white portions are active areas.**
- **OSD menus can be displayed on those unused black areas.**

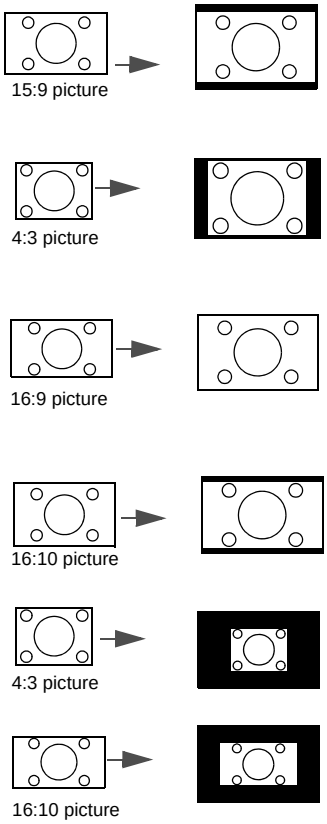

Setting a wall color

In the situation where you are projecting onto a colored surface such as a painted wall which may not be white, the Wall Color feature can help correct the projected picture's color to prevent possible color difference between the source and projected pictures. There are several precalibrated colors to choose from: Light Yellow, Pink, Light Green, Blue, and Blackboard.

To select wall color:

1. Press **MENU/EXIT** and then press ◀/▶ until the **Display** menu is highlighted.
2. Press ▼ to highlight **Wall Color**.
3. Press ◀/▶ to select a wall color to suit the color of the surface which you are projecting on.

Hiding the image

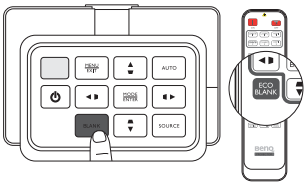

In order to draw the audience's full attention to the presenter, you can use **ECO BLANK** to hide the screen image. When this function is activated with an audio input connected, the audio can still be heard.

You can set the blank time in the **System Setup: Basic** > **Operation Settings** > **Blank Timer** menu to let the projector return the image automatically after a period of time when there is no action taken on the blank screen. The length of time can be set from 5 to 30 minutes in 5-minute increments.

If the preset time spans are not suitable for your personation, select **Disable**.

No matter **Blank Timer** is activated or not, you can press any key on the projector or remote control to restore the picture.

Once ECO BLANK is pressed, the projector lamp enters Economic mode automatically.

Locking control keys

With the control keys on the projector locked, you can prevent your projector settings from being changed accidentally (by children, for example). When the **Panel Key Lock** is on, no control keys on the projector will operate except **Power**.

To lock or unlock the control panel keys:

1. Press **MENU/EXIT** to open the OSD menu and press ◀/▶ to highlight the **System Setup: Basic** menu.
2. Press ▼ to highlight **Panel Key Lock** and press ◀/▶ to toggle the function **On**. A confirmation message is displayed.
3. Press ◀/▶ to select Yes and press **MODE/ENTER**.

Freezing the image

Press **FREEZE** on the remote control to freeze the image. The word "FREEZE" will be displayed in the upper left corner of the screen. To release the function, press any key on the projector or remote control.

Even if an image is frozen on the screen, the pictures are running on the video or other device. If the connected devices have active audio output, you will still hear the audio even though the image is frozen onscreen.

Adjusting the sound

The sound adjustments made (such as functions shown below) will have an effect on the projector speaker(s). Be sure you have made a correct connection to the projector audio input. See "Connecting to video equipment" on page 17 for how the audio input is connected.

- **Each time when you select a different source, the projector also changes the sound settings to which was last set for that particular source.**
- **Sound adjustments cannot be made during Quick Search.**

Muting the sound

To temporarily turn off the sound:

1. Press **MENU/EXIT** to open the OSD menu and press ◀/▶ to highlight the **Source** menu.
2. Press ▼ to highlight **Audio Settings** and press **MODE/ENTER**. The **Audio Settings** page is displayed.
3. Press ▼ to highlight **Mute** and press ◀/▶ to select **On**.

If available, you can also press MUTE on the remote control to toggle projector audio between on and off.

Adjusting the sound level

To adjust the sound level, press VOLUME+/VOLUME- on the remote control, or:

1. Repeat steps 1-2 from above.
2. Press ▼ to highlight **Volume** and press ◀/▶ to select a desired sound level.

Turning off the Power On/Off Ring Tone

To turn off the ring tone:

1. Repeat steps 1-2 from above.
2. Press ▼ to highlight **Power On/Off Ring Tone** and press ◀/▶ to select **Off**.

The only way to change Power On/Off Ring Tone is setting On or Off here. Setting the sound mute or changing the sound level will not affect the Power On/Off Ring Tone.

Using the test pattern

The projector is able to display the grid test pattern. It helps you adjust the image size and focus on checking that the projected image is free from distortion.

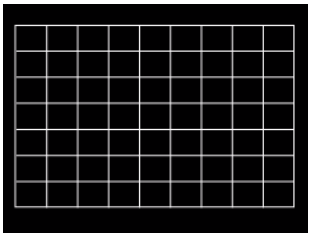

To display the test pattern:

1. Press **MENU/EXIT** to open the OSD menu and press ◀/▶ to highlight the **System Setup: Basic** menu.
2. Press ▼ to highlight **Test Pattern** and press ◀/▶ to select **On**.

Using the teaching templates

The projector provides several preset patterns for various teaching purposes. To activate the pattern:

1. Press **MENU/EXIT** to open the OSD menu and press ◄/► to highlight the **Display** menu.
2. Press ▼ to highlight **Teaching Template** and press **MODE/ENTER**.
3. Press ▲/▼ to highlight **Blackboard** or **Whiteboard**.
4. Press ◄/► to select the desired pattern and press **MODE/ENTER**.

Teaching Template	Whiteboard	Blackboard
Letter Formation	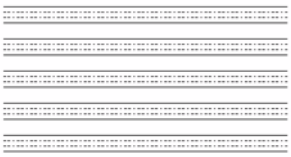	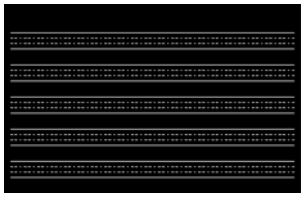
Worksheet		
Coordinate Chart		

Setting the lamp mode

This projector provides two lamp modes for different purposes:

Lamp mode	User benefit	Suitable environment
Normal (The lamp is used in normal mode)	• Delivering bright and clear images • Suitable for high-ambient-light environments • Allowing continuous and non-stop operation under critical situations	Large, well lit meeting rooms or auditoriums
Economic (The lamp is used in economic mode)	• Extending the lamp life • Allowing continuous and non-stop operation under critical situations	Small-mid boardrooms

You can perform one of the following methods to choose a lamp mode according to your preference.

Using the remote control:

1. Press **Lamp Mode** on your remote control, the lamp mode page is displayed.
2. Press ▼ to highlight your preferred lamp mode and press **MODE/ENTER**.

Using the OSD menu:

1. Press **MENU/EXIT** and then press ◀ / ▶ until the **System Setup: Advanced** menu is highlighted.
2. Press ▼ to highlight **Lamp Settings** and press **MODE/ENTER**.
3. Press ▼ to highlight **Lamp Mode** and press **MODE/ENTER**.
4. Press ▼ to highlight your preferred lamp mode and press **MODE/ENTER**.

A slight variation in the picture brightness and colors may be observed during the very short time of switching lamp modes.

Controlling the projector through a Wired LAN environment

Wired LAN allows you to manage the projector from a computer using a web browser when the computer and the projector are properly connected to the same local area network.

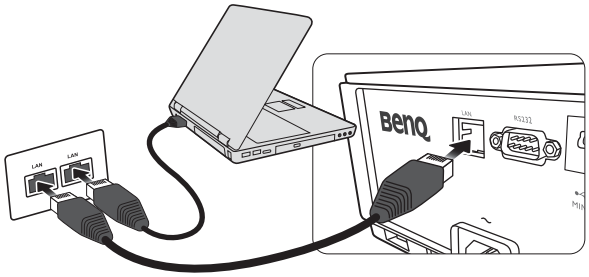

Configuring the Wired LAN

If you are in a DHCP environment:

1. Take a RJ45 cable and connect one end to the RJ45 LAN input jack of the projector and the other end to the RJ45 port.

When connecting the RJ45 cable, avoid coiling and intertwining the cable as it may cause signal noise or interruption.

2. Press **MENU/EXIT** and then press ◄/► until the **System Setup: Advanced** menu is highlighted.
3. Press ▼ to highlight **Network Settings** and press **MODE/ENTER**. The **Network Settings** page is displayed.
4. Press ▼ to highlight **Wired LAN** and press **MODE/ENTER**. The **Wired LAN** page is displayed.
5. Press ▼ to highlight **DHCP** and press ◄/► to select **On**.
6. Press ▼ to highlight **Apply** and press **MODE/ENTER**.
7. Go back to **System Setup: Advanced** > **Network Settings** page.
8. Press ▼ to highlight **AMX Device Discovery** and press ◄/► to select **On** or **Off**. When **AMX Device Discovery** is **On**, the projector can be detected by AMX controller.
9. Please wait for around 15 - 20 seconds, and then re-enter the **Wired LAN** page.
10. The **IP Address**, **Subnet Mask**, **Default Gateway**, and **DNS Server** settings will be displayed. Note down the IP address displayed in the **IP Address** row.

If the IP Address still does not display, contact your ITS administrator.

If you are in a non-DHCP environment:

1. Repeat steps 1-4 above.
2. Press ▼ to highlight **DHCP** and press ◄/► to select **Off**.
3. Contact your ITS administrator for information on the **IP Address**, **Subnet Mask**, **Default Gateway**, and **DNS Server** settings.
4. Press ▼ to select the item you want to modify and press **MODE/ENTER**.
5. Press ◄/► to move the cursor and then press ▲/▼ to enter the value.
6. To save the setting, press **MODE/ENTER**. If you do not want to save the setting, press **MENU/EXIT**.
7. Press **MENU/EXIT** to return to **Network Settings** page, press ▼ to highlight **AMX Device Discovery** and press ◄/► to select **On** or **Off**.
8. Press **MENU/EXIT** to exit the menu.

Controlling the projector remotely through a web browser

Once you have the correct IP address for the projector and the projector is on or in standby mode, you can use any computer that is on the same local area network to control the projector.

1. Enter the address of the projector in the address bar of your browser and click Go.

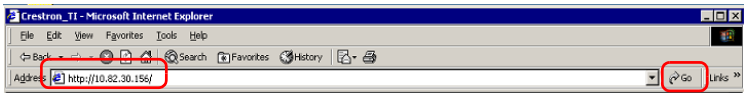

2. The remote network operation page opens. This page allows you to operate the projector as if you were using the remote control or control panel on the projector.

i	• Menu • Blank • ▲(▽) • ◀(▷)	• Auto PC • Input • ▼(△) • ▶(◁)	See "Remote control" on page 12 for details.
	• OK		Activates the selected On-Screen Display (OSD) menu item.
ii	To switch input source, click on your desired signal. ☞ **The source list varies according to the connectors available on the projector. "Video" stands for the Video signal.**		

The tools page allows you to manage the projector, configure the LAN control settings and secure access of remote network operation on this projector.

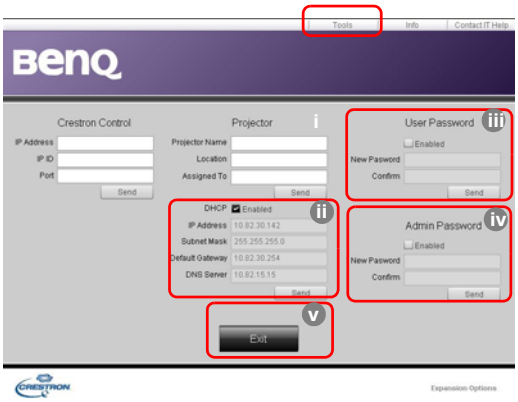

i. You can name the projector, keep track of its location and the person in charge of it.
ii. You can adjust the **LAN Control Settings**.
iii. Once set, access to the remote network operation on this projector has been password-protected.
iv. Once set, access to the tools page has been password-protected.

After making the adjustments, press the Send button and the data will be saved in the projector.

v. Press **Exit** to go back to the remote network operation page.

Please pay attention to the limitation of input length (including space and other punctuation keys) in the list blow:

Category Item	Input Length	Maximum Number of Characters
Crestron Control	IP Address	15
	IP ID	4
	Port	5
Projector	Projector Name	22
	Location	22
	Assigned To	22
Network Configuration	DHCP (Enabled)	(N/A)
	IP Address	15
	Subnet Mask	15
	Default Gateway	15
	DNS Server	15
User Password	Enabled	(N/A)
	New Password	15
	Confirm	15
Admin Password	Enabled	(N/A)
	New Password	15
	Confirm	15

The info page displays the information and status of this projector.

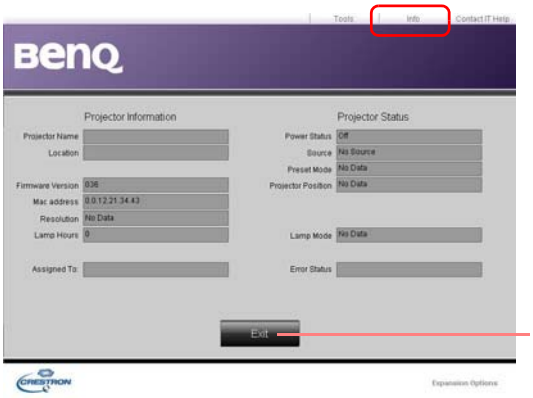

Press **Exit** to go back to the remote network operation page.

For more information, visit http://www.crestron.com & www.crestron.com/getroomview.

Operating in a high altitude environment

We recommend that you activate **High Altitude** when your environment is higher than 1500 meters (around 4920 feet) above sea level, or whenever the projector will be used for extended periods of time (>10 hours) without shutdown.

To activate High Altitude:

1. Press **MENU/EXIT** and then press ◄/► until the **System Setup: Advanced** menu is highlighted.
2. Press ▼ to highlight **High Altitude**.
3. Press ◄/► to select **On**. A confirmation message is displayed.
4. Highlight **Yes** and press **MODE/ENTER**.

Operation under High Altitude may cause a higher decibel operating noise level because of increased fan speed necessary to improve overall system cooling and performance.

If you use this projector under other extreme conditions excluding the above, it may display auto shut-down symptoms, which is designed to protect your projector from over-heating. In cases like this, you should switch to High Altitude to solve these symptoms. However, this is not to state that this projector can operate under any and all harsh or extreme conditions.

Turning the projector off

To turn the projector off, press **POWER** (⏻) on the projector or **OFF** ⏻ on the remote control and a warning message appears. Press **POWER/OFF** (⏻) again.

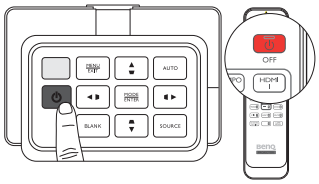

- The Power indicator light flashes orange and the fans run for about two minutes to cool the lamp. The projector will not respond to any commands until the cooling process is complete.

After turning off the projector, do NOT unplug the projector until the cooling process is complete and the fans stop running. Interrupting the cooling process in any way may cause overheating and result in damage to the projector.

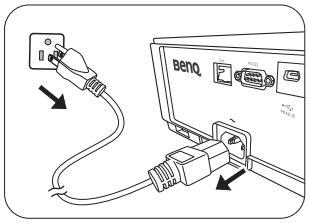

- Then, the Power indicator light is a steady orange once the cooling process has finished and fans stop.
- If the projector will not be used for an extended period, unplug the power cable from the power outlet.
- To protect the lamp, the projector will not respond to any commands during the cooling process.

- **Actual lamp life may vary due to different environmental conditions and usage.**
- **If you attempt to re-start the projector shortly after shutdown, the fans may run for a few minutes to cool down. Press ⏻ Power/ON again to start the projector after the fans stop and the Power indicator light turns orange.**

On-Screen Display (OSD) menus

On-Screen Display (OSD) structure

Please note that the on-screen display (OSD) menus vary according to the signal type selected.

Main menu	Sub-menu			Options
Picture	Picture Mode	Bright/Presentation/sRGB/Cinema/(3D)/User 1/User 2		
	Reference Mode	Bright/Presentation/sRGB/Cinema/User 1/User 2		
	Brightness			0~50~100
	Contrast			0~50~100
	Color			0~50~100
	Tint			0~50~100
	Sharpness			0–15
	Advanced...	Black Level		0 IRE/7.5 IRE
		Noise Reduction		0-31
		Color Temperature		Cool/Normal/Warm/Lamp Native
		Color Temperature Fine Tuning	Red Gain	0–200
			Green Gain	0–200
			Blue Gain	0–200
			Red Offset	0–511
			Green Offset	0–511
			Blue Offset	0–511
		3D Color Management	Primary Color	Red/Green/Blue/Cyan/Magenta/Yellow
			Hue	0–100
			Saturation	0–100
			Gain	0–100
		Gamma Selection		1.6/1.8/2.0/2.2/2.4/2.5/2.6/2.8/BenQ
		Brilliant Color		On/Off
	Rename User Mode			User 1/User 2
	Reset Picture Settings			Current/All

Main menu	Sub-menu			Options
Display	Wall Color			Off/Light Yellow/Pink/Light Green/Blue/ Blackboard
	Aspect Ratio			Auto/Real/4:3/16:9/16:10
	Overscan Adjustment			0/1/2/3
	2D Keystone			
	Corner Fit			Top Left/Top Right/Bottom Left/ Bottom Right
	3D		3D Mode	Auto/Off/Frame Sequential/Frame Packing/Top-Bottom/Side-by-Side
			3D Sync Invert	Disable/Invert
			Save 3D Settings	3D Settings 1/3D Settings 2/ 3D Settings 3
			Apply 3D Settings	3D Settings 1/3D Settings 2/ 3D Settings 3/Off
	Teaching Template	Blackboard	Off/Letter Formation/Worksheet/Coordinate Chart	
		Whiteboard	Off/Letter Formation/Worksheet/Coordinate Chart	
Source	Quick Search			On/Off
	HDMI Setting		HDMI Format	Auto/Full/Limit
			Color Space Conversion	Auto/RGB/YUV
			HDMI Equalizer	HDMI 1: Auto/1/2/3/4/5
				HDMI 2: Auto/1/2/3/4/5
	Audio Settings		Mute	On/Off
			Volume	0 ~ 5 ~ 10
			Power On/Off Ring Tone	On/Off
	Position			H: -10 ~ 0 ~ 10/ V: -10 ~ 0 ~ 10
	Phase			0 ~ Auto ~ 31
	H. Size			-15 ~ 0 ~ 15

System Setup: Basic	**Language**		English / Français / Deutsch Italiano / Español / Русский 繁體中文 / 简体中文 / 日本語 / 한국어 / Svenska / Nederlands / Türkçe/ Čeština / Português / ไทย / Polski Magyar/ Hrvatski/ Română/ Norsk/ Dansk / Български/ Suomi/ Indonesian/Ελληνικά/ العربية / हिन्दी
	Projector Installation		**Front/Rear/Rear Ceiling/Front Ceiling**
	Menu Settings	**Menu Display Time**	**5 sec/10 sec/20 sec/30 sec/Always**
		Menu Position	**Center/Top-Left/Top-Right/Bottom-Right/Bottom-Left**
		Reminder Message	**On/Off**
	Operation Settings	**Direct Power On**	**On/Off**
		Signal Power On	**On/Off**
		Auto Power Off	**Disable/3 min/10 min/15 min/20 min/25 min/30 min**
		Blank Timer	**Disable/5 min/10 min/15 min/20 min/25 min/30 min**
		Sleep Timer	**Disable/30 min/1 hr/2 hr/3 hr/4 hr/8 hr/ 12 hr**
	Remote Receiver		**Front/Top/Front+Top/Off**
	Panel Key Lock		**On/Off**
	Background Color		**BenQ/Black/Blue/Purple**
	Splash Screen		**BenQ/Black/Blue**
	Test Pattern		**On/Off**

Main menu	Sub-menu			Options
System Setup: Advanced	High Altitude			On/Off
	Lamp Settings	Lamp Mode		Normal/Economic
		Reset Lamp Timer		Reset/Cancel
		Lamp Timer		Lamp Usage Time
				Normal Mode
				Economic Mode
				Equivalent Lamp Hour
	Security Settings	Power On Lock		On/Off
		Change Password		
	Baud Rate			2400/4800/9600/14400/19200/38400/57600/115200
	Closed Caption	Closed Caption Enable		On/Off
		Caption Version		CC1 / CC2 / CC3 / CC4
	Standby Settings	Network	Enable Network Standby Mode	On/Off
			Auto Disable Network Standby Mode	Never/20 min/1 hr/3 hr/6 hr
		Monitor Out		On/Off
		Audio Pass Through		Off/Audio In/Audio L/R/HDMI-2/HDMI-1/MHL
	Network Settings	Wired LAN		Status/DHCP/IP Address/Subnet Mask/Default Gateway/DNS Server/Apply
		AMX Device Discovery		On/Off
		MAC Address		
	Reset All Settings			Reset / Cancel
Information	Native Resolution			
	Detected Resolution			
	Source			
	Picture Mode			
	Lamp Mode			
	3D Format			
	Color System			
	Lamp Usage Time			
	Firmware Version			

Note that the menu items are available when the projector detects at least one valid signal. If there is no equipment connected to the projector or no signal detected, limited menu items are accessible.

Picture menu

Function	Description
Picture Mode	Pre-defined picture modes are provided so you can optimize your projector picture set-up to suit your program type. See "Selecting a preset mode" on page 30 for details.
Reference Mode	Selects a preset mode that most suits your need for the picture quality and further fine-tune the picture based on the selections listed below. See "Setting the User 1/User 2 mode" on page 31 for details.
Brightness	Adjusts the brightness of the picture. See "Adjusting Brightness" on page 32 for details.
Contrast	Adjusts the degree of difference between dark and light in the picture. See "Adjusting Contrast" on page 32 for details.
Color	Adjusts the color saturation level -- the amount of each color in a video picture. See "Adjusting Color" on page 32 for details.
Tint	Adjusts the red and green color tones of the picture. See "Adjusting Tint" on page 32 for details.
Sharpness	Adjusts the picture to make it look sharper or softer. See "Adjusting Sharpness" on page 32 for details.
Reset Picture Settings	Returns all settings in the **Picture** menu to the factory preset values. See "Resetting the picture mode" on page 31 for details.
Rename User Mode	Renames **User 1** or **User 2**. See "Renaming user modes" on page 31 for details.

Picture menu (Advanced)

Function	Description
Black Level	Sets the picture grayscale as **0 IRE** or **7.5 IRE**. See "Setting Black Level" on page 33 for details.
Noise Reduction	Adjusts the picture quality. See "Setting Noise Reduction" on page 33 for details.
Color Temperature	There are several color temperature settings available. See "Selecting a color temperature*" on page 33 for details.
Color Temperature Fine Tuning	See "Setting a preferred color temperature" on page 34 for details.
3D Color Management	See "Color Management" on page 34 for details.
Gamma Selection	See "Selecting a Gamma setting" on page 34 for details.
Brilliant Color	See "Adjusting Brilliant Color" on page 34 for details.

Display menu

Function	Description
Wall Color	Corrects the projected picture color when the projection surface is not white. See "Setting a wall color" on page 38 for details.
Aspect Ratio	There are several options to set the aspect ratio depending on your input source. See "Selecting the aspect ratio" on page 36 for details.
Overscan Adjustment	Conceals the poor picture quality in the four edges. You can also manually press ◀/▶ to decide how much to be concealed. Setting 0 means the picture is 100% displayed. The greater the value, the more portion of the picture is concealed while the screen remains filled and geometrically accurate.
2D Keystone	Corrects any keystoning of the picture. See "Correcting picture distortion" on page 28 for details.
Corner Fit	Adjusts one of the four corners separately to make sure the projected image is straight. See "Using Corner Fit function" on page 29 for details. **Upon adjusting Corner Fit, if you adjust the aspect ratio or overscan, Corner Fit will be resetted.**
3D	This projector supports playing three-dimensional (3D) content transferred through your 3D-compatible video devices and contents, such as game consoles (with 3D game discs), 3D Blu-ray players (with 3D Blu-ray discs), 3D TV (with 3D channel), and so on. After you have connected the 3D video devices to the projector, wear the BenQ 3D glasses and make sure the power is on to view 3D contents. **When watching 3D contents:** • **The image may seem misplaced, however, this is not a product malfunction.** • **Take appropriate breaks when watching 3D content.** • **Stop watching 3D content if you feel fatigue or discomfort.** • **Keep a distance from the screen of about three times the effective height of the screen when watching 3D content.** • **Children and people with a history of oversensitivity to light, heart problems, or have any other existing medical condition should be refrained from watching 3D content.** The default setting is **Auto** and the projector automatically chooses an appropriate 3D format when detecting 3D contents. If the projector cannot recognize the 3D format, manually choose a 3D mode according to your preference. **When this function is enabled:** • **The brightness level of the projected image decreases.** • **The Picture Mode cannot be adjusted.** • **The 2D Keystone can only be adjusted within limited degrees.** **The function is accessible through the remote control.**
Teaching Template	See "Using the teaching templates" on page 40 for details.

Source menu

Function	Description
Quick Search	Allows the projector to search automatically for input sources. If the source scan is **On**, the projector will scan for input sources until it acquires a signal. If the function is not activated, the projector selects the last used input source.
HDMI Format	**HDMI Format** Selects an input source type for the HDMI signal. **Auto** is the default and recommended setting. You can also manually select the source type. The different source types carry different standards for the brightness level. **This function is only available when the HDMI signal is selected.** **Color Space Conversion** In the unlikely event that you connect the projector to a device (like a DVD or Blu-ray player) via the projector's HDMI input and the projected picture displays wrong colors, please change the color space to an appropriate one that fits the color space setting of the output device. • **Auto: Automatically selects a suitable color space for the incoming HDMI signal.** • **RGB: Sets the color space as RGB.** • **YUV: Sets the color space as YUV.** **These functions are only available when the HDMI/MHL or HDMI signal is selected.** **HDMI Equalizer** Adjusts the equalizer gain settings for an HDMI signal. The higher the setting, the stronger the gain value. If there are more than one HDMI port on the projector, select the HDMI port first before adjusting the value.
Audio Settings	See "Adjusting the sound" on page 39 for details.
Position	Displays the position adjustment page. To move the projected picture, use the directional arrow keys. The values shown on the lower position of the page change with every key press you made until they reach their maximum or minimum. They will return to their factory preset values whenever the projector is re-started. **This function is only available when the Component or PC signal is selected.**
Phase	Adjusts the clock phase to reduce picture distortion. 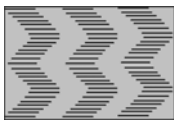 **This function is only available when the Component or PC signal is selected.**
H. Size	Adjusts the horizontal width of the picture. **This function is only available when the Component or PC signal is selected.**

System Setup: Basic menu

Function	Description
Language	Sets the language for the On-Screen Display (OSD) menus. See "Using the menus" on page 23 for details.
Projector Installation	The projector can be installed on a ceiling or behind a screen, or with one or more mirrors. See "Choosing a location" on page 13 for details.
Menu Settings	**Menu Display Time** Sets the length of time the OSD will remain active after your last key press. The range is from 5 to 30 seconds in 5-second increments. **Menu Position** Sets the On-Screen Display (OSD) menu position. **Reminder Message** Sets whether to display the OSD messages about the status of detecting signals.
Operation Settings	**Direct Power On** Sets whether to turn the projector directly on without pressing the ⏻**POWER** key on the projector or ⏻**ON** on the remote control when the projector is plugged in. **Signal Power On** Sets whether to turn the projector directly on without pressing the ⏻**POWER** key on the projector or ⏻**ON** on the remote control when the projector is in standby mode and the signal is feed through the VGA cable. **Auto Power Off** Prevents unnecessary projection when no signal is detected for a long time. See "Setting Auto Power Off" on page 59 for details. **Blank Timer** Sets the image blank time when the Blank feature is activated, once elapsed the image will return to the screen. See "Hiding the image" on page 38 for details. **Sleep Timer** Sets the auto-shutdown timer. The timer can be set to a value between 30 minutes and 12 hours.
Remote Receiver	Allows you to choose to activate the **Front**, **Top**, or **Front+Top** remote control IR sensors.
Panel Key Lock	Disable or enables all panel key functions except **POWER** on the projector and keys on remote control. See "Locking control keys" on page 38 for details.
Background Color	Allows you to choose the color of the background screen that will be displayed when there is no input source detected.
Splash Screen	Allows you to select which logo screen will be displayed during projector start-up. You can choose **BenQ** logo screen, **Blue** screen or **Black** screen.
Test Pattern	See "Using the test pattern" on page 39 for details. ☞ **The function is only available when the projector detects no input signal.**

System Setup: Advanced menu

Function	Description
High Altitude	A mode for operation in areas like high altitude or high temperature. See "Operating in a high altitude environment" on page 46 for details.
Lamp Settings	**Lamp Mode** Selects the projector lamp power among Normal and Economic modes. See "Setting the lamp mode" on page 41 for details. **Reset Lamp Timer** Once the lamp is renewed, select **Reset** to return the lamp timer to "0". See "Resetting the lamp timer" on page 63 for details. **Lamp Timer** Shows the lamp hour information. See "Getting to know the lamp hour" on page 59 for details.
Security Settings	**Password / Power On Lock** Limits use of the projector to only those who know the correct password. See "Utilizing the password function" on page 24 for details. **Change Password** You will be asked to enter the current password before changing to a new one. See "Changing the password" on page 26 for details.
Baud Rate	Selects a baud rate that is identical with your computer's so that you can connect the projector using a suitable RS-232 cable and update or download the projector's firmware. This function is intended for qualified service personnel.
Closed Caption	**Closed Caption Enable** Activates the function by selecting **On** when the selected input signal carries closed captions. • Captions: An on-screen display of the dialogue, narration, and sound effects of TV programs and videos that are closed captioned (usually marked as "CC" in TV listings). **Caption Version** Selects a preferred closed captioning mode. To view captions, select CC1, CC2, CC3, or CC4 (CC1 displays captions in the primary language in your area). **These functions are only available when the Video signal is selected.**

Standby Settings	**Network** Selecting **On** enables the function. The projector is able to provide the network function when it is in standby mode. **Monitor Out** Selecting **On** enables the function. The projector can output a VGA signal when it is in standby mode and the **PC** jack is correctly connected to devices. See "Connecting a monitor" on page 20 for how to make the connection. **Audio Pass Through** Press ◀/▶ to choose the source that you wish to use in operation mode. See "Connecting to video equipment" on page 17 for how to make the connection. When corresponding jacks are correctly connected to the device, the projector can output an audio signal to the external speaker when it is in standby mode. The built-in speaker(s) will be muted in standby mode. ☞ **Enabling this function slightly increases the standby power consumption.**
Network Settings	**Wired LAN** See "Controlling the projector through a Wired LAN environment" on page 42 for details.
Reset All Settings	Returns all settings to the factory preset values. ☞ **The following settings will still remain: names of user modes, 2D Keystone, Color Space Conversion, Language, Projector Installation, High Altitude, and Password.**

Information menu

This menu shows you the current operating status of the projector.

☞ **Some picture adjustments are available only when certain input sources are in use. Unavailable adjustments are not shown on the screen.**

Function	Description
Native Resolution	Shows the native resolution of the input signal.
Detected Resolution	Shows the detected resolution of the input signal.
Source	Shows the current signal source.
Picture Mode	Shows the selected mode in the **Picture > Picture Mode** menu.
Lamp Mode	Shows the selected lamp mode in the **System Setup: Advanced > Lamp Mode** menu.
3D Format	Shows the current 3D mode. Only available when **3D** mode is enabled.
Color System	Shows input system format.
Lamp Usage Time	Shows the total lamp time used.
Firmware Version	Shows the current firmware version.

Additional information

Care of the projector

Your projector needs little maintenance. The only thing you have to do on a regular basis is keep the lens clean. Never remove any parts of the projector except the lamp. Contact your dealer or local customer service center if the projector fails to operate as expected.

Cleaning the lens

Clean the lens whenever you notice dirt or dust on the surface. Before you attempt to clean the lens, turn the projector off, unplug the power cable, and leave it several minutes to cool completely.

1. Use a canister of compressed air to remove dust. (Available from building hardware or photographic suppliers.)
2. If there is stubborn dirt or smudge marks, use a proper photographic lens brush or moisten a clean soft lens cloth with lens cleaner to gently wipe the lens surface.
3. Never use any type of abrasive pad, alkaline/acid cleaner, scouring powder, or volatile solvent, such as alcohol, benzene, thinner or insecticide. Using such materials or maintaining prolonged contact with rubber or vinyl materials may result in damage to the projector surface and cabinet material.

Never touch the lens with your finger or rub the lens with abrasive materials. Even paper towels can damage the lens coating. Only ever use a proper photographic lens brush, cloth, and cleaning solution. Do not attempt to clean the lens while the projector is switched on or is still hot from previous use. Be sure to turn off the projector and let it cool down completely before cleaning the lens.

Cleaning the projector case

Before you attempt to clean the case, turn the projector off, unplug the power cable, and leave it several minutes to cool completely.

1. To remove dirt or dust, wipe the case with a soft, dry, lint-free cloth.
2. To remove stubborn dirt or stains, moisten a soft cloth with water and a neutral detergent. Then wipe the case.

Never use wax, alcohol, benzene, thinner or other chemical detergents. These can damage the case.

Storing the projector

If you need to store the projector for an extended time, please:

1. Make sure the temperature and humidity of the storage area are within the recommended range for the projector. Please refer to the Spec. page in this manual or consult your dealer about the range.
2. Retract the adjuster feet.
3. Remove the batteries from the remote control.
4. Pack the projector in its original packing or equivalent.

Transporting the projector

It is recommended that you ship the projector with its original packing or equivalent.

More information

Please visit the below local website to find service contact window:

http://www.benq.com/welcome

Lamp information

Getting to know the lamp hour

When the projector is in operation, the duration (in hours) of lamp usage is automatically calculated by the built-in timer.

To obtain the lamp hour information:

1. Press **MENU/EXIT** and then press ◄/► until the **System Setup: Advanced** menu is highlighted.
2. Press ▼ to highlight **Lamp Settings** and press **MODE/ENTER**. The **Lamp Settings** page is displayed.
3. Press ▼ to highlight **Lamp Timer** and press **MODE/ENTER**. The **Lamp Timer** page is displayed.
4. To leave the menu, press **MENU/EXIT**.

Extending lamp life

The projection lamp is a consumable item. To keep the lamp life as long as possible, you can do the following settings via the OSD menu.

- **Setting Lamp Mode as Economic**

Using **Economic** mode reduces system noise and power consumption. If the **Economic** mode is selected, the light output will be reduced and result in darker projected pictures.

Setting the projector in **Economic** mode also extends the lamp life. To set **Economic** mode, go to the **System Setup: Advanced** > **Lamp Settings** > **Lamp Mode** menu and press **MODE/ENTER**. Press ▼ to select **Economic** and press **MODE/ENTER**.

- **Setting Auto Power Off**

This function allows the projector to turn off automatically if no input source is detected after a set period of time.

To set **Auto Power Off**, go to the **System Setup: Basic** > **Operation Settings** > **Auto Power Off** menu and press ◄/► to select a time period. The time period can be set for 3 minutes or 10 to 30 minutes in 5-minute increments. If the preset time lengths are not suitable for your presentation, select **Disable**. The projector will not automatically shut down in a certain time period.

Timing of replacing the lamp

When the Lamp indicator lights up red or a message appears suggesting it is time to replace the lamp, please install a new lamp or consult your dealer. An old lamp may cause a malfunction in the projector and in some instances the lamp may explode. Go to http://www.BenQ.com for a replacement lamp.

The Lamp indicator light and Temperature warning light will light up if the lamp becomes too hot. Turn the power off and let the projector cool for 45 minutes. If the Lamp or Temp indicator still lights up after turning the power back on, please contact your dealer. See "Indicators" on page 64 for details.

The following Lamp warning displays will remind you to change the lamp.

Status	Message
Install a new lamp for optimal performance. If the projector is normally run with **Economic** selected (See "Getting to know the lamp hour" on page 59), you may continue to operate the projector until the next hour lamp warning appears. Press **MODE/ENTER** to dismiss the message.	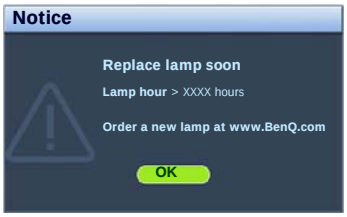
It is strongly recommended that you replace the lamp at this age. The lamp is a consumable item. The lamp brightness diminishes with use. This is normal lamp behavior. You can replace the lamp whenever you notice that the brightness level has significantly diminished. Press **MODE/ENTER** to dismiss the message.	
The lamp MUST be replaced before the projector will operate normally. Press **MODE/ENTER** to dismiss the message.	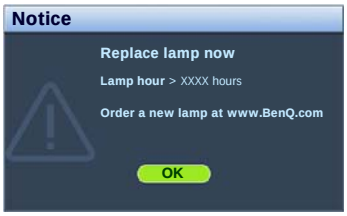

"XXXX" shown in the above messages are numbers that vary depending on different models.

Replacing the lamp

- **To reduce the risk of electrical shock, always turn the projector off and disconnect the power cable before changing the lamp.**
- **To reduce the risk of severe burns, allow the projector to cool for at least 45 minutes before replacing the lamp.**
- **To reduce the risk of injuries to fingers and damage to internal components, use caution when removing lamp glass that has shattered into sharp pieces.**
- **To reduce the risk of injuries to fingers and/or compromising image quality by touching the lens, do not touch the empty lamp compartment when the lamp is removed.**
- **This lamp contains mercury. Consult your local hazardous waste regulations to dispose of this lamp in a proper manner.**
- **To assure optimal performance from the projector, it is recommended that you purchase a qualified projector lamp for lamp replacement.**
- **If lamp replacement is performed while the projector is suspended upside-down from the ceiling, make sure that no one is underneath the lamp socket to avoid any possible injury or damage to the human eyes caused by fractured lamp.**
- **Ensure good ventilation when handling broken lamps. We recommend that you use respirators, safety glasses, goggles or face shield and wear protective clothing such as gloves.**

1. Turn the power off and disconnect the projector from the power outlet. Turn off all connected equipment and disconnect all other cables. See "Turning the projector off" on page 47 for details.
2. Loosen the screw on the lamp cover.

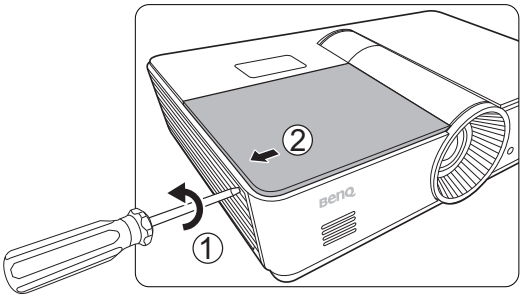

3. Remove the lamp cover.

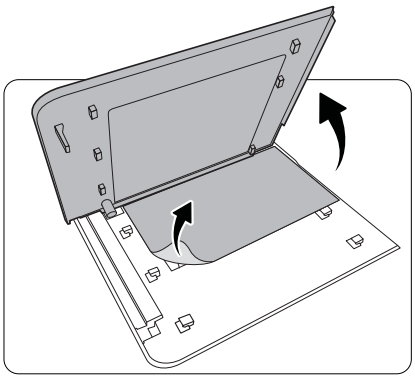

4. Loosen the screw that hold the lamp to the projector. Disconnect the lamp connector from the projector.

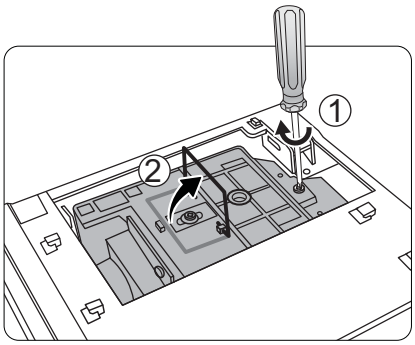

5. Lift the handle so that it is perpendicular to the lamp. Use the handle to slowly pull the lamp out of the projector.

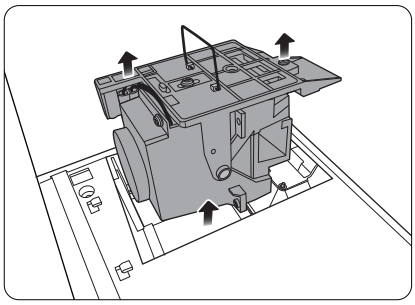

Notes

- **Pulling it too quickly may cause the lamp to break and scatter broken glass in the projector. To reduce the risk of injuries to fingers and damage to internal components, use caution when removing lamp glass that has shattered.**
- **Do not place the lamp in locations where water might splash on it, children can reach it, near or above heat sources, or near flammable materials.**
- **Do not insert your hand into the projector when the lamp is removed. If you touch the optical components inside, it could cause blurred images.**

6. Insert the replacement lamp. Make sure it is pushed fully and firmly in place.

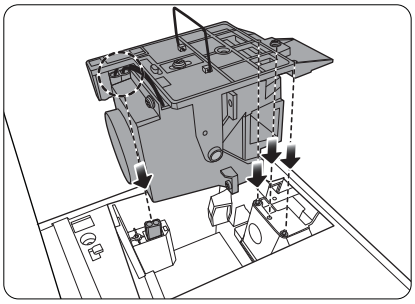

7. Ensure the handle is fully locked in place. Tighten the screw securing the lamp box.

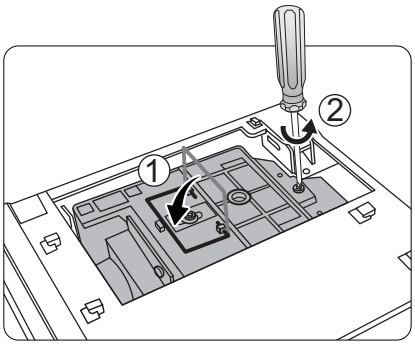

Notes

- **Please be careful to not over-tighten the screws.**
- **Loose screws may cause a bad connection, which could result in malfunction.**

8. Replace the lamp cover.

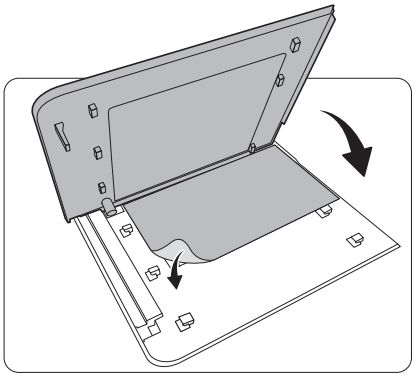

9. Tighten the screws on the lamp cover.
10. Reapply power and turn the projector back on.

Resetting the lamp timer

Do not reset the lamp timer if the lamp has not been replaced as this could cause damage.

1. After the start-up logo, press **MENU/EXIT** and then press ◀/▶ until the **System Setup: Advanced** menu is highlighted.
2. Press ▼ to highlight **Lamp Settings** and press **MODE/ENTER**. The **Lamp Settings** page is displayed.
3. Highlight **Reset Lamp Timer** and press **MODE/ENTER**. A warning message is displayed asking if you want to reset the lamp timer. Highlight **Reset** and press **MODE/ENTER**. The lamp time will be reset to "0".

Indicators

Light			Status
POWER	TEMP	LAMP	
Power events			
Orange	Off	Off	Stand-by mode.
Green Flashing	Off	Off	Powering up.
Green	Off	Off	Normal operation.
Orange Flashing	Off	Off	Normal power-down cooling.
Red Flashing	Red Flashing	Red Flashing	Download
Red Flashing	Off	Off	Scaler shutdown fail (data abort)
Red	Off	Red	Scaler reset fail (video projector only)
Off	Red	Off	LAN download fail
Off	Green	Off	LAN download OK
Green	Off	Orange	Lamp Life exhausted
Burn-in events			
Green	Off	Off	Burn-in ON
Green	Green	Green	Burn-in OFF
Lamp events			
Off	Off	Red	Lamp error in normal operation
Off	Off	Orange Flashing	Lamp is not lit up
Thermal events			
Red	Red	Off	Fan 1 error (Fan speed is ±25% outside the desired speed)
Red	Red Flashing	Off	Fan 2 error (Fan speed is ±25% outside the desired speed)
Red	Green	Off	Fan 3 error (Fan speed is ±25% outside the desired speed)
Red	Green Flashing	Off	Fan 4 error (Fan speed is ±25% outside the desired speed)
Red Flashing	Red	Off	Fan 5 error (Fan speed is ±26% outside the desired speed)
Red Flashing	Red Flashing	Off	Fan 6 error (Fan speed is ±27% outside the desired speed)
Green	Red	Off	Temperature 1 error (exceeding temperature limit)

Troubleshooting

Problem	Cause	Remedy
The projector does not turn on.	There is no power from the power cable.	Plug the power cable into the AC inlet on the rear of the projector, and plug the power cable into to the power outlet. If the power outlet has a switch, make sure that it is switched on. (See page 21.)
	Attempting to turn the projector on again during the cooling process.	Wait until the cooling down process has completed.
	The lamp cover is not securely attached.	Correctly attach the lamp cover. (See page 61.)
No picture.	The video source is not turned on or connected correctly.	Turn the video source on and check that the signal cable is connected correctly. (See page 17.)
	The projector is not correctly connected to the input source device.	Check the connection. (See page 17.)
	The input source has not been correctly selected.	Select the correct input source with the Source keys on the remote control or **SOURCE** on the projector. (See page 22.)
Image is unstable.	The connection cables are not securely connected to the projector or the signal source.	Correctly connect the cables to the appropriate terminals. (See page 17.)
Picture is blurred.	The projection lens is not correctly focused.	Adjust the focus of the lens using the focus ring. (See page 27.)
	The projector and the screen are not aligned properly.	Adjust the projection angle and direction as well as the height of this projector if necessary. (See page 27.)
Remote control does not work correctly.	The batteries are out of power.	Replace both of the batteries with new ones. (See page 7.)
	There is an obstacle between the remote control and the projector.	Remove the obstacle. (See page 7.)
	You are too far away from the projector.	Stand within 8 meters (26.2 feet) of the projector. (See page 7.)
3D content does not display correctly	The 3D glasses are out of battery.	Recharge the 3D glasses.
	The settings in the **3D** menu are not set correctly.	Correctly set the settings in the **3D** menu.
	Your Blu-ray Disc is not in 3D format.	Use a 3D Blu-ray Disc and try again.
	The input source has not been correctly selected.	Select the correct source with the **SOURCE** key on the projector or remote control.

Specifications

All specifications are subject to change without notice.

■ Optical

Projection system	Single-chip DLP™ system
Native resolution	0.65" DLP (1920 x 1080)
Lens	F = 2.59 to 2.87, f = 16.88 to 21.88 mm
Projection screen size	60" to 180"
Lamp	370W

■ Electrical

Compatibility	PC
	640 x 480 to 1920 x 1080
	Video
	NTSC, PAL, SECAM, YPbPr (480i/480p/576i/576p/720p/1080i/1080p), HDTV (720p/1080i/1080p)
Color Space	Typ. = 60% NTSC

■ Terminals

Input	Analog RGB: D-Sub 15-pin (female) x 1
	HDMI (V. 1.4a) x 2
	MHL (V. 2.1) x 1 (shared with HDMI input)
	S-Video: Mini DIN 4pin x 1
	Component Video (Y/CB/CR + Y/PB/PR) x 1 (shared with RGB input)
	Composite Video x 1
	RCA Audio in x 1
	PC Audio in x 1
	Microphone x 1
	RJ45 LAN x 1
Output	Analog RGB: D-Sub 15-pin (female) x 1
	Audio out x 1
	Speaker: 10W x 2
Control	Serial Connector: RS232 9 pin (male)
	USB (Type-A) x 1
	USB (Mini B type) x 1
	IR receiver x 2
	LAN x 1 (RJ45)
	12VDC Trigger x 1 (Max. 0.5 A)

■ General characteristics

Projector weight	4.9 kg (10.80 lbs)
Power	VAC 100-240V, 6 A, 50-60Hz
Power consumption	Max. 594 W; Standby < 0.5 W; Network Standby < 3 W
Operating temperature	0 °C to 40 °C (without condensation)
Storage temperature	-20°C to 60°C at sea level
Operating/Storage humidity	10% - 90% (without condensation)
Operating altitude	0 ~ 1499 m at 0 °C to 35 °C 1500 ~ 3000 m at 0 °C to 30 °C (with High Altitude Mode on)
Storage altitude	0 ~ 12200 m @ 30 °C

■ Dimensions

411.4 mm x 267.5 mm x 118.4 mm (W x D x H)

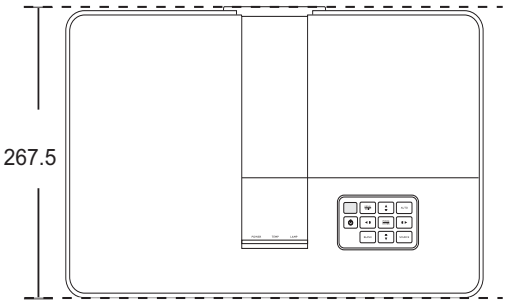

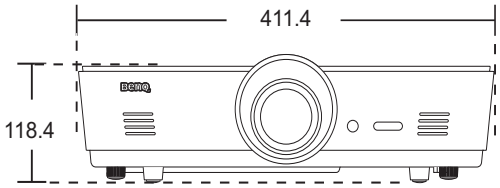

Unit: mm

■ Ceiling mount installation

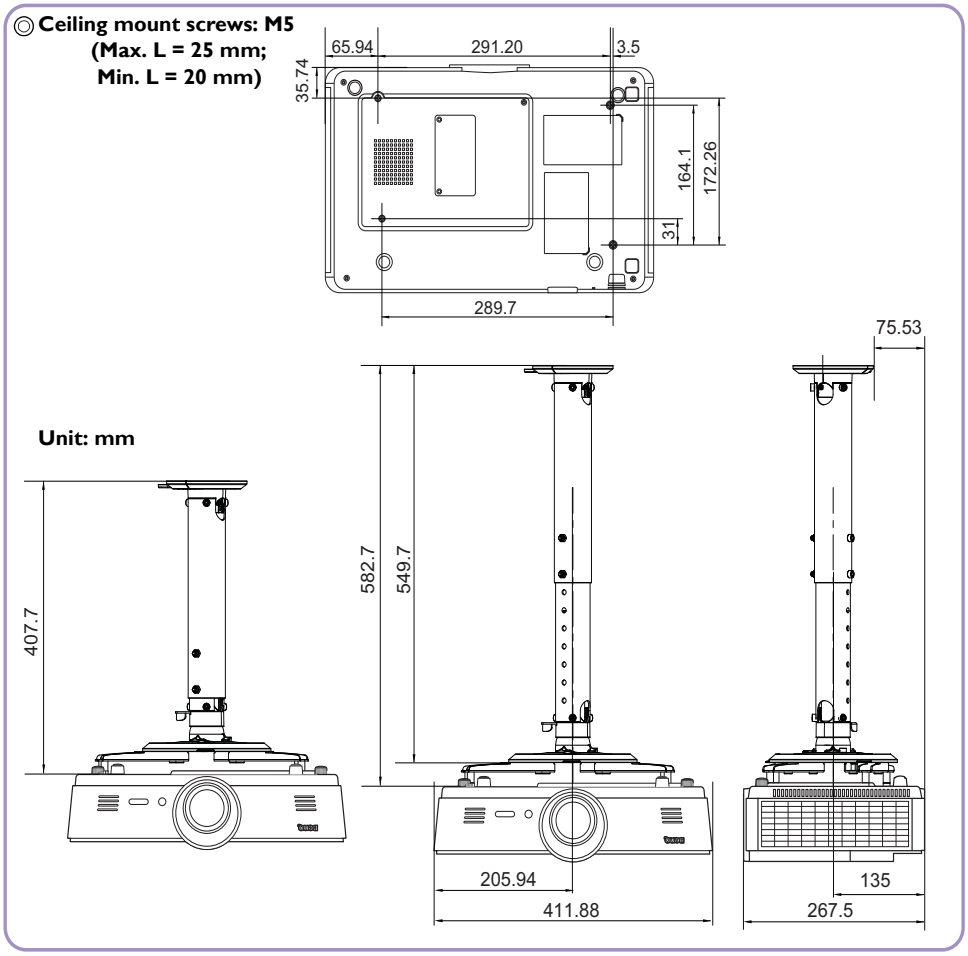

■ Timing chart

Supported timing for PC input

Format	Resolution	Refresh rate (Hz)	H. Frequency (KHz)	Pixel Frequency (MHz)
640 x 480	VGA_60*	59.94	31.469	25.175
	VGA_72	72.809	37.861	31.5
	VGA_75	75	37.5	31.5
	VGA_85	85.008	43.269	36
720 x 400	720 x 400_70	70.087	31.469	28.3221
800 x 600	SVGA_60*	60.317	37.879	40
	SVGA_72	72.188	48.077	50
	SVGA_75	75	46.875	49.5
	SVGA_85	85.061	53.674	56.25
	SVGA_120** (Reduce Blanking)	119.854	77.425	83
1024 x 768	XGA_60*	60.004	48.363	65
	XGA_70	70.069	56.476	75
	XGA_75	75.029	60.023	78.75
	XGA_85	84.997	68.667	94.5
	XGA_120** (Reduce Blanking)	119.989	97.551	115.5
1152 x 864	1152 x 864_75	75	67.5	108
1024 x 576****	Notebook Timing	60	35.82	46.996
1024 x 600****	Notebook Timing	64.995	41.467	51.419
1280 x 720	1280 x 720_60*	60	45	74.25
1280 x 768	1280 x 768_60*	59.87	47.776	79.5
1280 x 800	WXGA_60*	59.81	49.702	83.5
	WXGA_75	74.934	62.795	106.5
	WXGA_85	84.88	71.554	122.5
	WXGA_120** (Reduce Blanking)	119.909	101.563	146.25
1280 x 1024	SXGA_60***	60.02	63.981	108
	SXGA_75	75.025	79.976	135
	SXGA_85	85.024	91.146	157.5
1280 x 960	1280 x 960_60***	60	60	108
	1280 x 960_85	85.002	85.938	148.5
1360 x 768	1360 x 768_60***	60.015	47.712	85.5
1440 x 900	WXGA+_60***	59.887	55.935	106.5
1400 x 1050	SXGA+_60***	59.978	65.317	121.75
1600 x 1200	UXGA***	60	75	162
1680 x 1050	1680 x 1050_60***	59.954	65.29	146.25
1920 x 1200	1920 x 1200_60*** (Reduce Blanking)	59.95	74.038	154

640 x 480@67Hz (MAC13)	640 x 480@67Hz	66.667	35	30.24
832 x 624@75Hz (MAC16)	832 x 624@75Hz	74.546	49.722	57.28
1024 x 768@75Hz (MAC19)	1024 x 768@75Hz	74.93	60.241	80
1152 x 870@75Hz (MAC21)	1152 x 870@75Hz	75.06	68.68	100
1920 x 1080@60Hz	1920 x 1080_60 (Reduce Blanking)	60	67.5	148.5
1920 x 1200@60Hz	1920 x 1200_60 (Reduce Blanking)	59.95	74.038	154

*** Supported timing for 3D signal with Frame Sequential, Top-Bottom and Side-by-Side format.**
**** Supported timing for 3D signal with Frame Sequential format.**
***** Supported timing for 3D signal with Top-Bottom and Side-by-Side format.**
****** Only for the PC (analog RGB) inputs**

The timings showing above may not be supported due to EDID file and VGA graphic card limitations. It is possible that some timings cannot be chosen.

Supported timing for HDMI (HDCP)/MHL input

Format	Resolution	Refresh rate (Hz)	H. Freq. (KHz)	Pixel Freq. (MHz)
480i	720 (1440) x 480*	59.94	15.73	27
480p	720 x 480*	59.94	31.47	27
576i	720 (1440) x 576	50	15.63	27
576p	720 x 576	50	31.25	27
720/50p	1280 x 720**	50	37.5	74.25
720/60p	1280 x 720***	60	45	74.25
1080/50i	1920 x 1080****	50	28.13	74.25
1080/60i	1920 x 1080****	60	33.75	74.25
1080/24P	1920 x 1080**	24	27	74.25
1080/25P	1920 x 1080	25	28.13	74.25
1080/30P	1920 x 1080	30	33.75	74.25
1080/50P	1920 x 1080*****	50	56.25	148.5
1080/60P	1920 x 1080*****	60	67.5	148.5

*** Supported timing for 3D signal with Frame Sequential format.**
**** Supported timing for 3D signal with Frame Packing, Top-Bottom and Side-by-Side format.**
***** Supported timing for 3D signal with Frame Sequential, Frame Packing, Top-Bottom and Side-by-Side format.**
****** Supported timing for 3D signal with Side-by-Side format.**
******* Supported timing for 3D signal with Top-Bottom and Side-by-Side format.**

Supported timing for EDTV and HDTV (via Component inputs)

Format	Resolution	Refresh rate (Hz)	H. Freq. (KHz)	Pixel Freq. (MHz)
480i	720 x 480*	59.94	15.73	13.5
480p	720 x 480*	59.94	31.47	27
576i	720 x 576	50	15.63	13.5
576p	720 x 576	50	31.25	27
720/50p	1280 x 720	50	37.5	74.25
720/60p	1280 x 720*	60	45	74.25
1080/50i	1920 x 1080	50	28.13	74.25
1080/60i	1920 x 1080	60	33.75	74.25
1080/24P	1920 x 1080	24	27	74.25
1080/25P	1920 x 1080	25	28.13	74.25
1080/30P	1920 x 1080	30	33.75	74.25
1080/50P	1920 x 1080	50	56.25	148.5
1080/60P	1920 x 1080	60	67.5	148.5

*** Supported timing for 3D signal with Frame Sequential format.**

Supported timing for Video and S-Video input

Format	Refresh rate (Hz)	H. Freq. (KHz)	Pixel Freq. (MHz)
NTSC*	60	15.73	3.58
NTSC 4.43	60	15.73	4.43
PAL-B/D/G/H/I/N	50	15.63	4.43
PAL M	60	15.73	3.58
PAL N	50	15.63	3.58
PAL 60	60	15.73	4.43
SECAM	50	15.63	4.25/4.41

Supported timing for 3D signal with Frame Sequential format.

Warranty and Copyright information

Warranty

BenQ warrants this product against any defects in material and workmanship, under normal usage and storage.

Proof of purchase date will be required with any warranty claim. In the event this product is found to be defective within the warranty period, BenQ's only obligation and your exclusive remedy shall be replacement of any defective parts (labor included). To obtain warranty service, immediately notify the dealer from which you purchased the product of any defects.

Important: The above warranty shall be void if the customer fails to operate the product in accordance with BenQ's written instructions, especially the ambient humidity must be in-between 10% and 90%, temperature in-between 0°C and 35°C, altitude lower than 3000 meters, and avoiding to operate the projector in a dusty environment. This warranty gives you specific legal rights, and you may have other rights which vary from country to country.

For other information, please visit www.BenQ.com.

Copyright

Copyright © 2017 by BenQ Corporation. All rights reserved. No part of this publication may be reproduced, transmitted, transcribed, stored in a retrieval system or translated into any language or computer language, in any form or by any means, electronic, mechanical, magnetic, optical, chemical, manual or otherwise, without the prior written permission of BenQ Corporation.

All trademarks and registered trademarks are the property of their respective owners.

Disclaimer

BenQ Corporation makes no representations or warranties, either expressed or implied, with respect to the contents hereof and specifically disclaims any warranties, merchantability or fitness for any particular purpose. Further, BenQ Corporation reserves the right to revise this publication and to make changes from time to time in the contents hereof without obligation of BenQ Corporation to notify any person of such revision or changes.

*DLP, Digital Micromirror Device and DMD are trademarks of Texas Instruments. Others are copyrights of their respective companies or organizations.

Patents

Please go to http://patmarking.benq.com/ for the details of BenQ projector patent coverage.