USA's primary source for projector lamps
myprojectorlamps

PROJECTOR OWNER'S MANUAL

BenQ

DXS660

Need a replacement lamp for this projector?

www.myprojectorlamps.com

Original manufacturer manual, provided unmodified as a courtesy of MyProjectorLamps.com.
All trademarks belong to their respective owners.

BenQ

BenQ DX/S660 DX/S650

User's Guide

Copyright

Copyright © 2002 by BENQ Corporation (formerly Acer Communications & Multimedia Inc.). All rights reserved. No part of this publication may be reproduced, transmitted, transcribed, stored in a retrieval system or translated into any language or computer language, in any form or by any means, electronic, mechanical, magnetic, optical, chemical, manual or otherwise, without the prior written permission of BENQ Corporation.

Disclaimer

BENQ Corporation makes no representations or warranties, either expressed or implied, with respect to the contents hereof and specifically disclaims any warranties, merchantability or fitness for any particular purpose. Furthermore, BENQ Corporation reserves the right to revise this publication and to make changes from time to time in the contents hereof without obligation of BENQ Corporation to notify any person of such revision or changes.

Fill this in!!	
In case service is needed in the future, record the information described below. The serial number is on the back of the product.	
Projector Information	
Product Name:	DX/S660 DX/S650
Serial Number:	
Date of Purchase:	
Dealer Information	
Dealer:	
Telephone Number:	
Address:	

Table of Contents

Introduction 1

Safety Instructions 1
Warranty 2
Limited Warranty 2
Shipping Contents 3
Optional Accessories 3
Projector Description 4
Projector 4
External Control Panel 5
Adjuster 6
Projector Features 6
Remote Control Description 7
Installing or Replacing Batteries 8

Installation 9

Screen Size 9
Connecting to Various Equipment 9

Operation 11

Start Up 11
Digital Keystone Correction 12
Auto Adjustment 12
Source Selection 13
Menu System 13
1. Display Menu 14
2. Image Menu 15
3. Source Menu 16
4. Control Menu 17
5. PIP Menu 18
Shutdown 19

Maintenance 20

Lamp Information 20
Use and Replacement of the Lamp 20
Lamp LED Indicators 20
Lamp Replacement 21
Resetting Lamp Hours 22
Temp Information 22
Service Information 23
Accessories (included in the Standard Package) 23
Optional Accessories (not included in the Standard Package) 23
Ordering Parts or Getting Information 23

Troubleshooting 24

Status Messages 25

Specifications 26
Projector Specifications 26
Timing Chart 27
Dimensions 28

INTRODUCTION

⚠ Caution

TO PREVENT SHOCK, DO NOT OPEN THE CABINET. NO USER –SERVICEABLE PARTS INSIDE. REFER SERVICING TO QUALIFIED SERVICE PERSONNEL. PLEASE READ THIS USER'S GUIDE BEFORE YOU OPERATE YOUR PROJECTOR. SAVE THIS USER'S GUIDE FOR FUTURE REFERENCE .

Safety Instructions

1. Read this user's guide before you operate your projector and save it for future reference.
2. The lamp becomes extremely hot during operation. Allow the projector to cool for approximately 45 minutes prior to removing the lamp assembly for replacement. Do not operate lamps beyond the rated lamp life. Excessive operation of lamps beyond the rated life could cause them to explode on rare occasions.
3. Never replace the lamp assembly or any electronic components unless the projector is unplugged.
4. To reduce the risk of electric shock, do not disassemble this appliance. Take it to a qualified technician when service or repair is required. Incorrect reassembly can cause electric shock when the appliance is subsequently used.
5. Do not place this product on an unstable cart, stand, or table. The product may fall, sustaining serious damage.
6. This product is capable of displaying inverted images for ceiling mount installation. Please use suitable equipment for mounting the unit and ensure it is securely installed.

⚠ Caution

- **Always open the lens shutter or remove the lens cap when the projector lamp is on.**
- **Do not look straight at the projector lens during operation. The intense light beam may damage your eyes.**
- **In some countries, the line voltage is NOT stable. This projector is designed to operate safely within a bandwidth of 110 to 240 volts, but could fail if power cuts or surges of more than10 volts occur. In these high-risk areas, it is recommended that a power stabilizer unit be used in conjuction with this projector.**

Save this user's guide: The information contained in this manual will assist you in operating and maintaining your personal projector.

Warranty

Limited Warranty

BENQ warrants this product against any defects in material and workmanship, under normal usage and storage.
Exclusion to Warranty: The lamps are considered a consumable item and are warranted for 90 days or 500 hours, whichever occurs first. Proof of purchase date will be required with any warranty claim. In the event this product is found to be defective within the warranty period, BENQ's only obligation and your exclusive remedy shall be replacement of any defective parts (labor included). To obtain warranty service, immediately notify the dealer from which you purchased the product of any defects.
Important: The above warranty shall be void if the customer fails to operate the product in accordance with BENQ's written instructions. This warranty gives you specific legal rights, and you may have other rights which vary from country to country.

FCC STATEMENT - CLASS A: This equipment generates, uses and can radiate radio frequency energy, and if not installed and used in accordance with the instruction manual, may cause interference to radio communications. It has been tested and found to comply with the limits for a Class "A" computing device pursuant to Subpart B of Part 15 of the FCC Rules, which are designed to provide reasonable protection against such interference when operated in a commercial environment. Operation of this equipment in a residential area is likely to cause interference, in which case the user at his/her own expense will be required to take whatever measures may be required to correct the interference.

FCC STATEMENT - CLASS B: This equipment generates, uses and can radiate radio frequency energy and, if not installed and used in accordance with the instructions, may cause harmful interference to radio communications. However, there is no guarantee that interference will not occur in a particular installation. If this equipment does cause harmful interference to radio or television reception, which can be determined by turning the equipment off and on, the user is encouraged to try to correct the interference by one or more of the following measures:

- Reorient or relocate the receiving antenna.
- Increase the distance between the equipment and receiver.
- Connect the equipment into an outlet on a circuit different from that to which the receiver is connected.
- Consult the dealer or an experienced radio/TV technician for help.

EEC STATEMENT: This machine was tested against the 89/336/EEC (European Economic Community) for EMC (Electro Magnetic Compatibility) and fulfills these requirements.

Shipping Contents

The Projector is shipped with the cables required for connection to standard PC or laptop computers. Carefully unpack and verify that you have all the items shown below. If any of these items are missing, please contact personnel at the place of purchase.

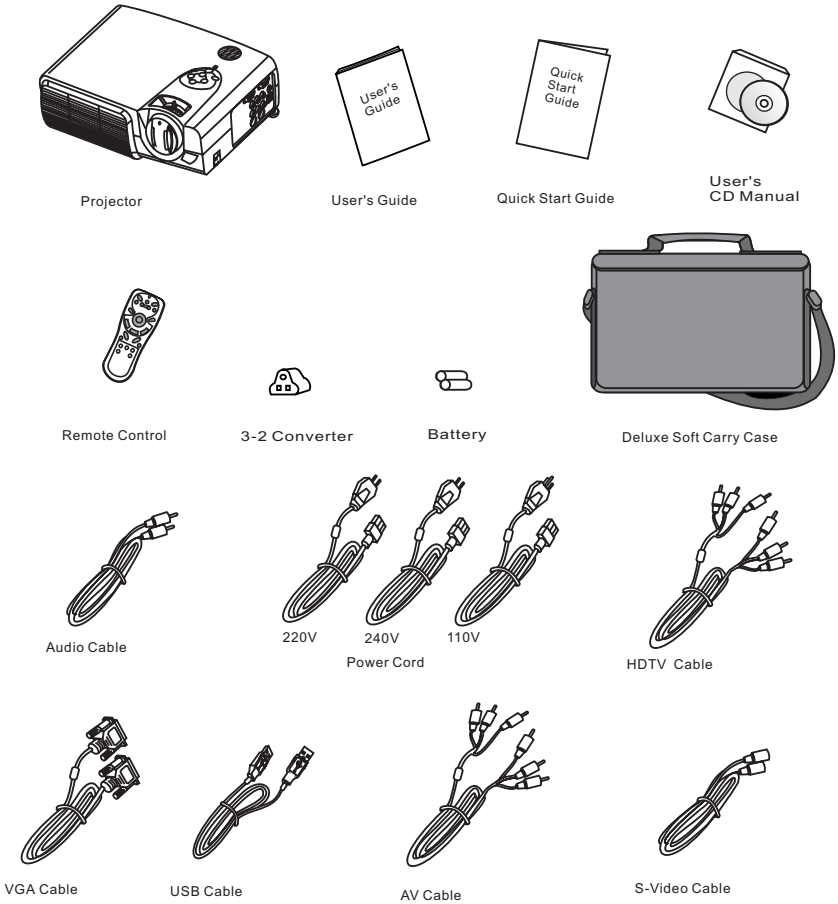

Optional Accessories

1. Macintosh adapter
2. 210W Lamp module

Projector Description

Projector

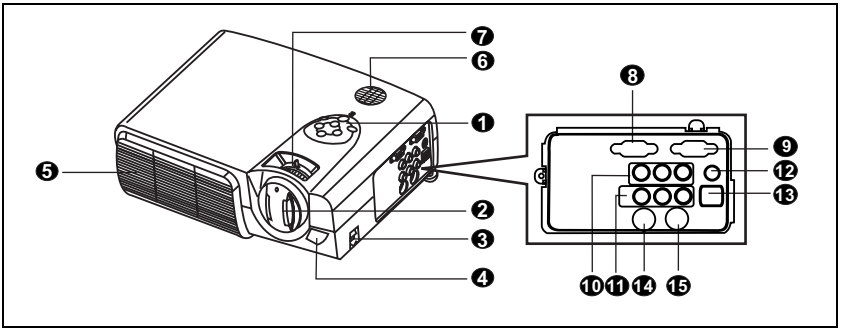

1	External control panel (see next page)	11	Audio/ Video connector
2	Projection lens	12	Audio jack
3	Front adjuster	13	USB mouse connector
4	IR remote sensor	14	S-Video jack
5	Ventilation grill	15	RS 232 control port
6	Speaker	16	Rear adjuster feet
7	Projection lens adjuster	17	Kensington lock
8	RGB signal input	18	AC power cord inlet
9	RGB signal output	19	Main power switch
10	YPBPR connector	20	Lamp door

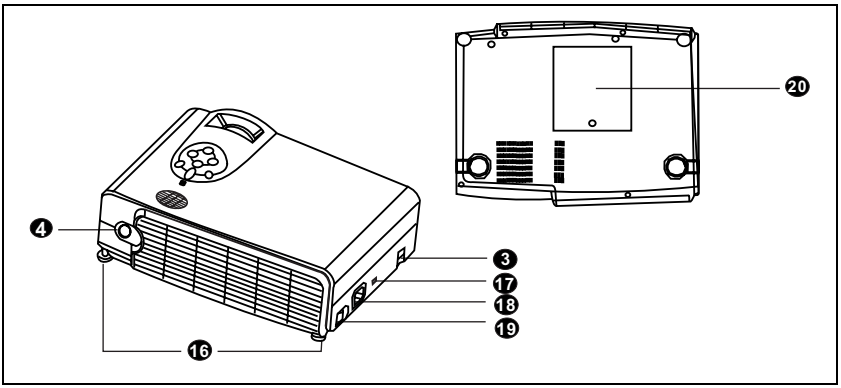

External Control Panel

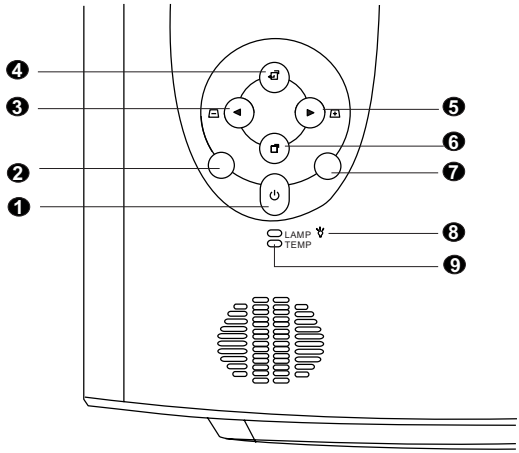

❶ **Power**

Presses the **Power** key to turn the projector on or off.

❷ **Auto**

Automatically determines the best picture settings for current received signals.

❸ **Left/ Keystone -**

❹ **Exit**

❺ **Right/ Keystone +**

❻ **Menu**

Menu will display the menu system on screen. Press **Menu** again to access the sub-menus. **Left** and **Right** help you navigate among choices and settings in the menus and sub-menus. However, when the on-screen menu is not activated, the **Left** and **Right** buttons will function as **Keystone +/-** hot keys.

Press the **Exit** button to go back to the main menu. Press **Exit** again to leave the menu system.

❼ **Source**

Selects signal sources from among PC, Video, S-Video and YPBPR.

❽ **Lamp Indicator**

The Lamp Indicator will light up when the lamp needs service, cooling or replacement. See "Lamp Information" on page 20 for more detailed information.

❾ **Temp indicator**

The Temp indicator will flash when the system temperature is too high, which may occur if the projector is operated improperly. See "Temp Information" on page 22 for more detailed information.

Adjuster

The projector is equipped with 2 quick-release adjuster feet. Push the buttons to adjust its tilt angle.

1. Lift the projector up and press the adjuster button to release the adjuster.
2. The adjuster will drop into position and be locked.

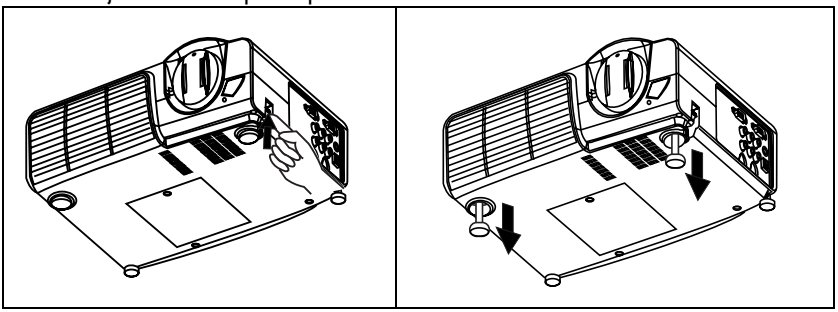

Projector Features

The projector integrates high-performance optical engine projection and a user-friendly design to deliver high reliability and ease of use.

The projector offers the following features:

- Small and light for portability
- Full-function remote control with laser pointer/ remote mouse function
- Hight quality manual zoom lens
- One-key auto-adjustment to display the best picture quality
- Easy digital keystone correction through hot keys to correct distorted images
- Adjustable color balance control for data/video display
- Ultra-high brightness projection lamp
- Ability to display 16.7 million colors
- On-screen menus in 8 languages: English, French, German, Italian, Spanish, Korean, Simplified Chinese, and Traditional Chinese.
- Switchable Normal/ Video mode for data/ video display
- Powerful AV function to provide high quality AV picture
- HDTV compatibility (YPBPR)

Note: The brightness of the projected image will vary depending on the ambient lighting conditions and contrast/brightness settings.

Remote Control Description

The remote control sensors are located in the front/ back of the projector. The distance between the sensor and the remote control should not exceed 6 meters.

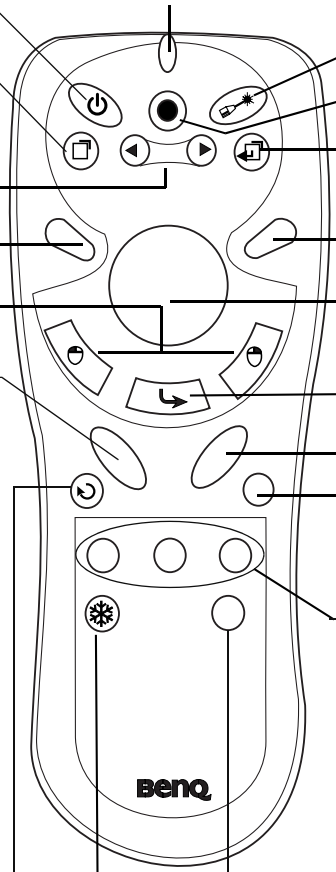

By pressing ZOOM IN +, the center of the picture will be magnified. When the **+** button is pressed again, the picture is further magnified, up to four times the original size. By pressing ZOOM OUT -, the size of the image is reduced. When the **-** button is pressed again, the picture is further reduced until it is restored to its original size. To return to the normal display mode, press the RETURN button. (This function can be used in combination with FREEZE.)

By pressing the PIP-Source, PIP-Pos and PIP-Size hotkeys, you can enable the PIP (Picture In Picture) function and choose the position and size of the PIP image.

By pressing the Ratio hotkey, you can select the screen aspect ratio you prefer: 4:3,16:9

The image is frozen when FREEZE is pressed. A "Pause" icon will appear in the lower right corner of the screen for three seconds. To stop the freeze function, press the FREEZE button, RETURN button or SOURCE button (when the input source is switched over during display) again. A "Play" icon will appear in the lower right corner of the screen for three seconds when the freeze function is stopped.

Installing or Replacing Batteries

❶ Push and slide the battery compartment lid in the direction shown.

❷ Install batteries as indicated by the diagram inside the compartment.

❸ Position the lid over the compartment and snap it back into place.

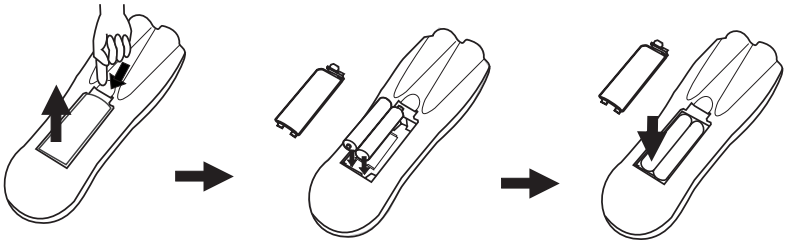

⚠ Caution

Avoid excessive heat and humidity. There may be danger of an explosion if batteries are incorrectly replaced. Replace only with the same or equivalent type recommended by the manufacturer. Dispose of used batteries according to the manufacturer's instructions.

INSTALLATION

Screen Size

Place the projector at the required distance from the screen according to the desired picture size (see the table below).

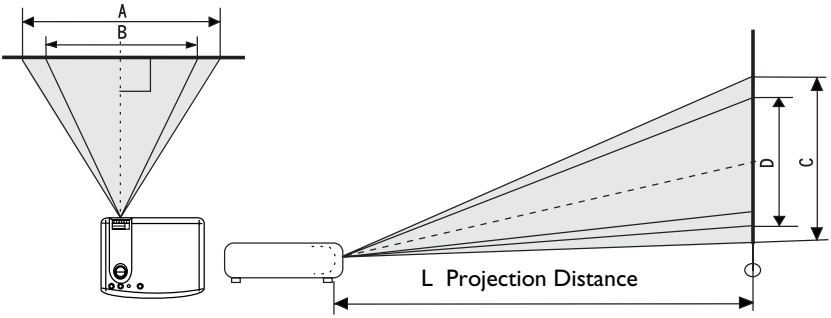

Screen Size (Max.)			L. Projection distance (cm)	Screen Size (Min.)	
Diagonal	A. Width (cm)	C. Height (cm)		B. Width (cm)	D. Height (cm)
30.4	61.8	46.3	100	50.7	38.0
60.8	123.65	92.7	200	101.3	76.0
91.2	185.3	138.9	300	151.9	113.9
121.5	247.0	185.2	400	202.5	151.9
151.9	308.7	231.6	500	253.2	189.9
182.3	370.5	277.9	600	303.8	227.9
213.1	432.2	324.18	700	354.4	266.2
243.1	494.0	370.5	800	405.1	303.8
273.5	555.7	416.7	900	455.7	341.8
303.9	617.5	463.11	1000	506.3	379.8

Connecting to Various Equipment

HDTV description

The projector is capable of displaying various High Definition TV display modes. Some of these sources are:

- Digital-VHS (D-VHS) player
- DVD player
- Satellite Dish HDTV receiver
- DTV tuners

Most of these sources will provide an analog component video output, a standard VGA output, or a YPBPR (default) format.

The projector is capable of accepting HDTV data through a YPBPR connector. Use a HDTV cable that came with your projector to display HDTV images.

The following standards are supported in the HDTV function:

- 480i
- 480p
- 720p
- 1080i

Please refer to "Menu System" on page 13 for information on the HDTV OSD selections.

Connecting to Various Equipment

It only takes a few seconds to connect your projector to your desktop or notebook computer, VCR, or other systems. However, a Mac adapter (an optional accessory) is needed for connection to Macintosh computers.

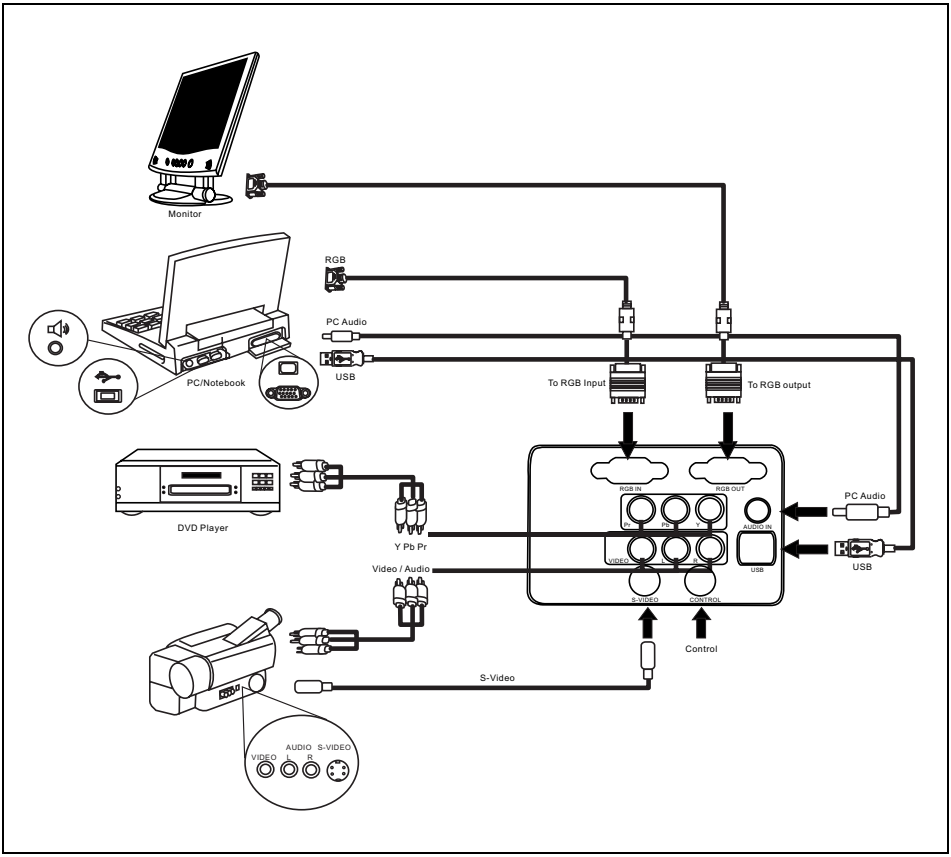

OPERATION

Start Up

1. Plug the power cord into a wall socket.

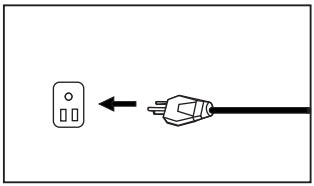

2. Turn on the main power switch.

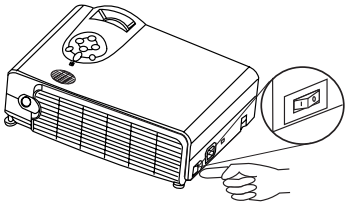

3. Press POWER to start the unit. The back-lit POWER key flashes green and stays green when the power is turned on.

Projector Remote Control

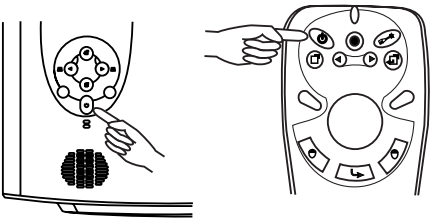

(When the power is turned off, there is a 60-second cooling period before the projector can be re-started.)

4. Switch on all connected equipment.

Digital Keystone Correction

Keystoning refers to the situation where the projected image is noticeably wider at either the top or bottom. To correct this, press KEYSTONE +/- (hot key) on the control panel of the projector or on the remote control, and then adjust the sliding bar labeled Keystone, as needed. Press **+** to correct keystoning at the top of the image. Press **-** to correct keystoning at the bottom of the image.

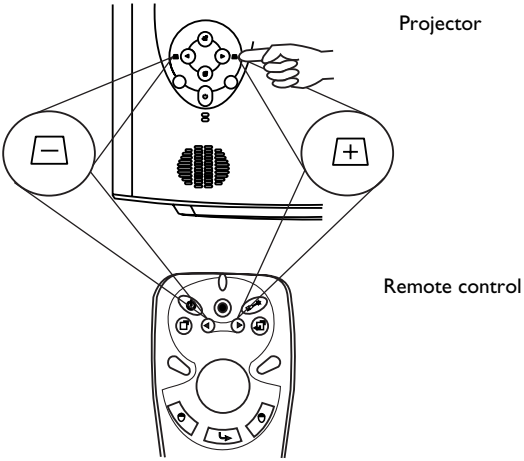

Auto Adjustment

In some cases, you may need to optimize the picture quality. To do this, press the AUTO key on the control panel of the projector or on the remote control. Within 3 seconds, the built-in Intelligent Auto Adjustment function will re-adjust settings to provide the best picture quality.

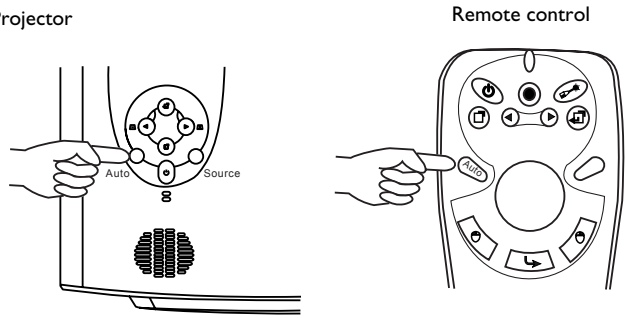

Source Selection

When several input sources are available, press the SOURCE key to make a selection from the control panel of the projector or the remote control.

Projector

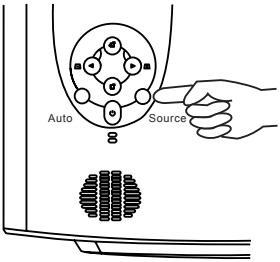

Remote control

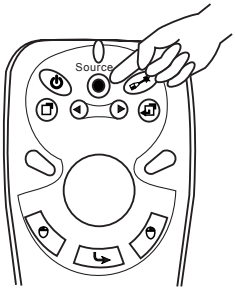

Menu System

Press **Menu** for the main menu, and then press ◀ or ▶ to select a sub-menu. Press **Menu** again to select items in the sub-menu.

Menu Bar		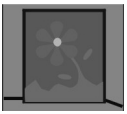	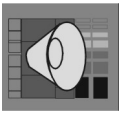	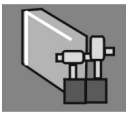	
Sub-menu	**Display**	**Image**	**Source**	**Control**	**PIP**
PC	Keystone Brightness Contrast Phase H.Size	Ratio H-position V-position Color Temp Information	Mirror Source Volume Treble Bass Mute	Langauge OSD Setup Default Video Mode Lamp hour	**Main page:** PIP Source PIP Size PIP Pos. H. Position V.Position More Options **Sub Page:** Brightness Contrast Color Tint Sharpness System
Y/Pb/Pr		Ratio H-position V-position Color Tint Color Temp			
Video	Keystone Brightness Contrast Color Tint	Ratio System Sharpness Color Temp Information			

1. Display Menu

FUNCTION	DESCRIPTION
Keystone	Corrects any keystoning of the image. 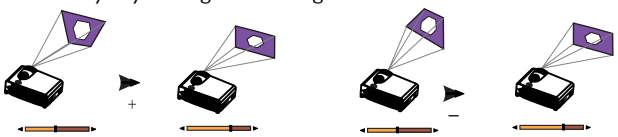
Brightness	Adjusts the brightness of the image. 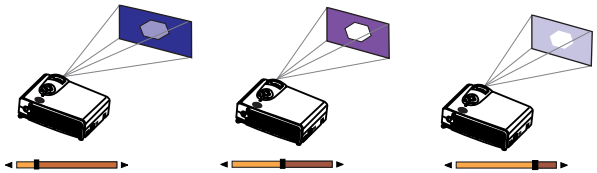
Contrast	Adjusts the degree of difference between dark and light in the image. 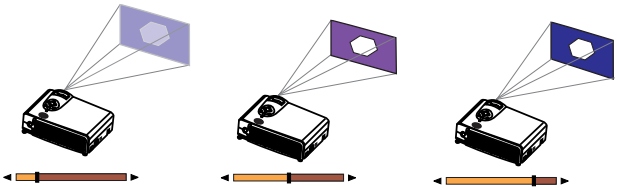
Phase	Adjusts to avoid the occurrence of flicker. 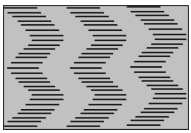 ***This function is not available when the input mode is Video or S-Video.**
H.Size	Adjusts to fit in the desired image size. ***This function is not available when the input mode is Video or S-Video.**
Color	Increases or decreases the color range (R, G, B) of the image. ***This function is not available when the input mode is PC.**
Tint	Adjusts the image to make it appear more red or blue. ***This function is not available when the input mode is PC.**

2. Image Menu

FUNCTION	DESCRIPTION
Ratio	Users have 3 options for the image ratio. 1. 1:1 2. 4:3 3. 16:9
H-position	Adjusts the horizontal position of the projected image. 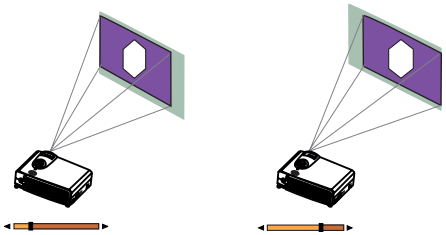
V-position	Adjusts the vertical positon of the projected image. 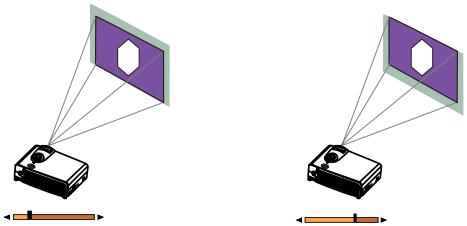
Color Temp.	Adjusts the color temperature to fit your preference.
Information	Shows the current resolution.
System	System information will be shown: 1. Auto 2.NTSC 3. PAL 4.SECAM ***The default setting for System is Auto.***
Sharpness	Adjusts the image to make it look sharper or softer. ***This function is not available when the input mode is PC or YPBPR.***
Color	Increases or decreases the color range (R, G, B) of the image. ***This function is not available when the input mode is PC.***
Tint	Adjusts the image to make it appear more red or blue. ***This function is not available when the input mode is PC.***

3. Source Menu

FUNCTION	DESCRIPTION
Mirror	**1.** Default 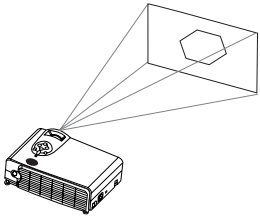 **2.** Ceiling mounted projection 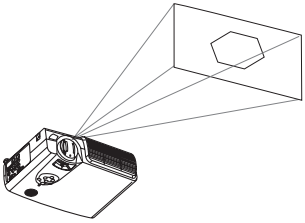 **3.** Rear screen projection 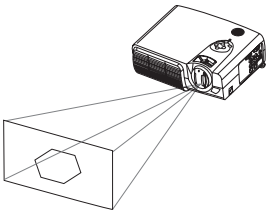 **4.** Ceiling mounted and rear-screen projection 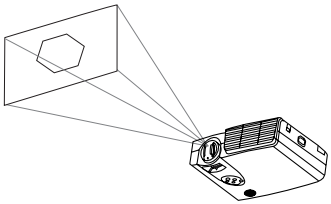
Source	Selects the input source from among PC, Video, S-Video, and YPBPR.
Volume	Adjusts the volume level.
Treble	Adjusts the treble level.
Bass	Adjusts the bass level.
Mute	**Off** **On**

4. Control Menu

FUNCTION	DESCRIPTION
Language	Language sets the language for the OSD control menus. Use the ◀ / ▶ key to select the desired language from among English, French, German, Italian, Spanish, Korean, Simplified Chinese and Traditional Chinese.
OSD	**OSD Pos.** Selects a desired OSD position.
	OSD Time Sets the length of time the OSD will remain active after the last time you pressed the button. The range is from 5 to 60 seconds in 5-second increments.
Setup	**Source Scan** When selected, activates the Source scan function.
	Keystone hold When selected, preserves the last keystone correction value even when the projector is restarted.
	Mirror hold When selected, preserves the last mirror correction value even when the projector is restarted.
	Blank time Determines the length of time before the projector is shut off when Blank is activated.
	Auto Off Sets the length of time before the system is shut off when no input is detected.
	User logo Enables the user to define his/her own logo screen that will display during strat-up. Three modes are available: Default (BENQ logo), black screen and blue screen.
Default	Returns all settings to their factory preset values.
Video Mode	Selects video mode.
Lamp hour	Shows lamp usage time.

5. PIP Menu

These functions are available only when the input mode is PC and the PIP source is Video or S-Video.

FUNCTION	DESCRIPTION
PIP Source	Selects the source for the PIP.
PIP Size	Enables use of the ◀ / ▶ key to scroll through the four alternatives: Off, Small, Medium, Large. 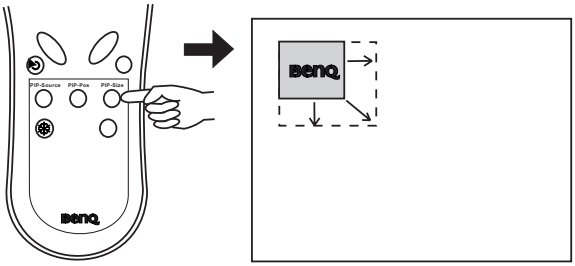
PIP Position	Selects a desired position for the PIP. 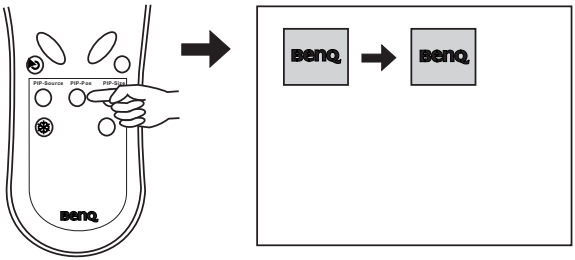
H. Position	Adjusts the horizontal position of the PIP image.
V. Position	Adjusts the vertical position of the PIP image.
More Options	Enables use of the ◀ / ▶ key to select more PIP functions including Brightness, Contrast, Color, Tint, Sharpness and System.
Brightness	Adjusts the brightness of the PIP image.
Contrast	Adjusts the degree of difference between dark and light for the PIP image.
Color	Increases or decreases the color range (R, G, B) of the image.
Tint	Adjusts the image to make it appear more red or blue.
Sharpness	Adjusts the image to make it appear sharper or softer
System	Selects PIP image systems: Auto, NTSC, PAL, SECAM

Shutdown

1. Press **POWER** and a warning message will appear. To turn off the projector, press **POWER** again.

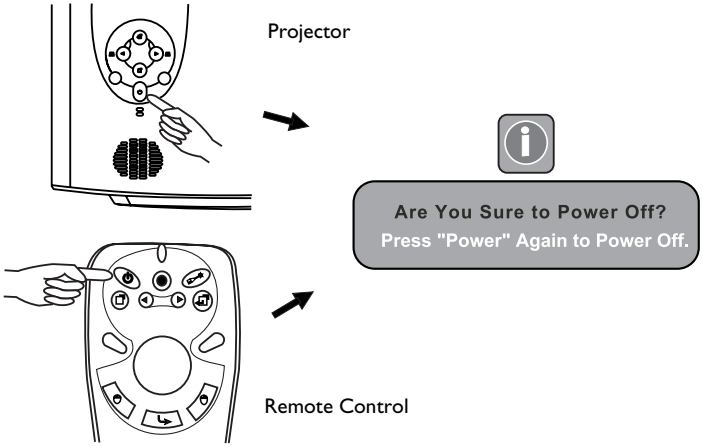

2. The fan will continue to run for approximately two minutes.
3. Turn off the main power switch.

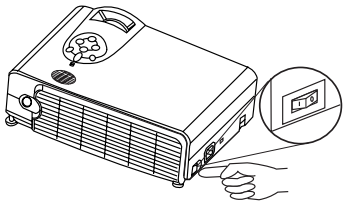

4. Disconnect the power cord from the wall socket.

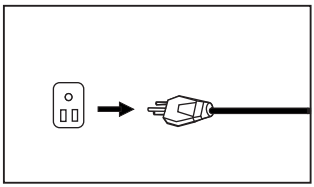

⚠ Caution

Please do not unplug the power cord before POWER is shut down or during the two-minute cooling process.
If the projector is not properly shut down, to protect the lamp, the system will detect this and cool the lamp for two minutes automatically before turning on again.

MAINTENANCE

Lamp Information

Use and Replacement of the Lamp

When the Lamp Indicator lights up red or a message appears suggesting the time of lamp replacement, please install a new lamp or consult your dealer. An old lamp could cause a malfunction in the projector and in rare instances may even explode.

Lamp LED Indicators

Lamp Life Indicators	When the LED lights up red, it is warning you that lamp uage has exceeded 1500 hours. Replace the projection lamp with a new one immediately.
The Lamp is not properly attached	LED lights up red.
The temperature is too high	When the projector's internal temperature is too high for the projector to operate safely, the LED blinks orange and the lamp turns off automatically. The LED keeps blinking while the unit is off. If the LED light is off, the operation and temperature of the projector's lamp are normal.

⚠ Caution

The LAMP indicator will light up if the lamp becomes too hot. Turn off the power and let the projector cool for 45 minutes. If the LAMP indicator is still red when turning the power on, please contact your dealer.

Lamp Replacement

⚠ Caution

To reduce the risk of electrical shock, always turn off the projector and disconnect the power cord before changing the lamp.

1. Press the **POWER** button to switch off the projector. Disconnect the power cord from the outlet and the projector.
2. Loosen the screw and remove the lamp cover. If the lamp is hot, avoid burns by waiting 45 minutes until the lamp has cooled.
3. Loosen the 3 screws. (It is strongly recommended that you use a magnetic-head screwdriver.) Pull the handle to remove the lamp housing. If the screws are not loosened completely, they could injure your fingers. Do not insert your hand into the box after the lamp is removed. If you touch the optical components inside, this could cause color unevenness in projected images.
4. Replace the lamp with a new one. Insert it into the projector, and tighten the screws firmly. Loose screws may cause a bad connection, which may result in malfunction.
5. Re-install the lamp cover and tighten the screw. **Do not turn on the power with the lamp cover removed.** Whenever the lamp is replaced, reset the total lamp operation time. **Do not reset if the lamp is not replaced as this could cause damage.**

Step 1

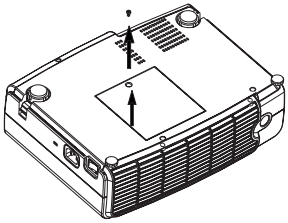

Step 2

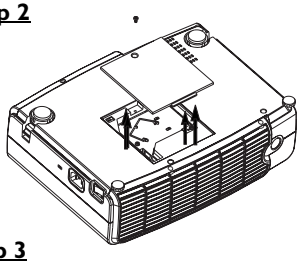

Step 3

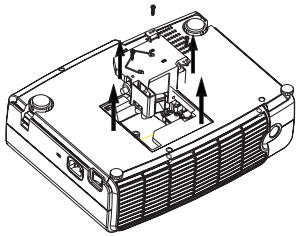

Step 4

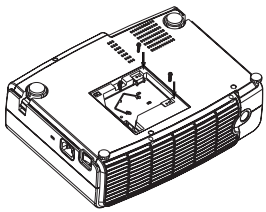

⚠ Caution

To reduce the risk of severe burns, allow the projector to cool for at least 45 minutes before replacing the lamp.

To reduce the risk of injuries to fingers and damage to internal components, use caution when removing lamp glass that has shattered into sharp pieces.

To reduce the risk of injuries to fingers and/or compromising image quality by touching the lens, do not touch the empty lamp compartment when the lamp is removed.

This lamp contains mercury. Consult your local hazardous waste regulations to dispose of this lamp in a proper manner.

Resetting Lamp Hours

If you replace the lamp after 1500 hours of operation, please follow the instructions below within 10 minutes of powering on.

OSD	FUNCTION
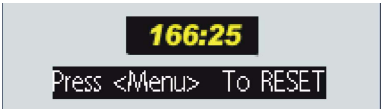	Press the Exit button on the projector for 3 seconds to display the total used lamp time.
	• Press the MENU button on the projector during the lamp hour message. An adjustment message will appear. • Press ◀ or ▶ to reset lamp hours or press EXIT to leave.

Temp Information

When the LED lights up, it is warning you of the following possible problems:

1. The internal temperature is too high.
2. The fans are not working.

Turn off the projector and contact qualified service personnel for further help.

Service Information

Accessories (included in the Standard Package)

Description	Part Number
Power cord (EU)	27.82718.281
Power cord (US)	27.01818.000
Power cord (UK)	27.02718.201
Signal cable	50.J0508.502
Video cable	50.J2918.001
S-Video cable	50.72920.011
PC - PC audio cable	50.74405.501
Soft carrying case	98.J3402.B11
HDTV cable	50.J7111.501
USB mouse cable	50.73213.501
Remote control	98.J3401.B11
3-2 converter	22.91007.001

Optional Accessories (not included in the Standard Package)

Description of parts	Part number
Mac adapter (switchable)	20.20118.A15
210W lamp module	60.J3004.001

Ordering Parts or Getting Information

For product information, product assistance, service information, or to order accessories, please see the BENQ corporation website at http://www.BenQ.com.

TROUBLESHOOTING

Common Problems & Solutions

PROBLEMS	TRY THESE SOLUTIONS
NO POWER	• Make sure the power cord is inserted snuged into the AC adapter socket. • Make sure the power cord is inserted snuged into the power outlet. • Toggle the power switch to the position "I". • Wait two minutes after the projector is turned off before turning the projector back on.
NO PICTURE	• Check for the proper input source. • Ensure all cables are connected properly. • Adjust the brightness and contrast. • Remove the lens cap.
TRAPEZOID IMAGE ON THE SCREEN	• Reposition the unit to improve its angle on the screen. • Use the **Keystone** correction key on the control panel of the projector or the remote control unit.
POOR COLOR	• Select the correct video system. • Adjust brightness, contrast, or saturation.
BLURRED IMAGE	• Press **Auto** on the control panel of the projector or the remote control unit to get better picture quality. • Adjust the focus. • Reposition the unit to improve its projection angle. • Ensure the distance between the unit and screen is within the adjustment range of the lens.
REMOTE CONTROL DOES NOT WORK	• Replace the batteries with new ones. • Make sure there is no obstacle between the remote control and the projector. • Stand within 4 meters (13 feet) of the projector. • Make sure nothing is blocking the front and rear receivers.

Status Messages

On-Screen Messages	Description
SEARCHING	Projector is searching for input.
ACQUIRING SIGNAL	Projector has identified the input signal and is running the auto image adjustment function.
OUT OF RANGE	Input signal frequency exceeds the projector's range.
LAMP WARNING - CHANGE LAMP AND RESET LAMP TIMER!	The lamp has been in operation for 1400 hours. Install a new lamp for optimal performance.
OUT OF LAMP USAGE TIME. CHANGE THE LAMP!	The lamp has been in operation for 1480 hours, and the power will turn off after 20 hours.
OUT OF LAMP USAGE TIME. YOU HAVE TO CHANGE THE LAMP!	The lamp has been in operation for over 1500 hours. The warning message will display for 30 seconds every 5 minutes after you turn on the projector and the power will turn off automatically after 10 minutes.

SPECIFICATIONS

Projector Specifications

Technical Specifications

Note: All specifications are subject to change without notice.

General		
Product name	Personal Projector	
Model name	DX660/650	1024X768 XGA
	DS660/650	800X600 SVGA
Optical		
Display system	1-CHIP DMD	
Lens F/Number	F/2.6	
Lamp	210W NSH lamp	
Electrical		
Power supply	AC100 ~ 240V, 3.5A, 50/60 Hz (Automatic)	
Power consumption	330 W (Max)	
Mechanical		
Dimensions	308 mm (W) x 95 mm (H) x 238 mm (D)	
Operating temperature range	10°C ~ 40°C	
Weight	6.8 lbs (3.1 Kg)	
Input terminal		
Computer input		
RGB input	D-sub 15-pin (female)	
Video signal input		
S-VIDEO	Mini DIN 4-pin port x1	
VIDEO	RCA jack x1	
HDTV signal input	YPBPR RCA jack x3	
Audio signal input		
Audio 1	Mini jack stero port	
Audio 2	RCA jack L, R x2	
Output		
USB mouse connector	A/B series x1	
Speaker	3 watt x 1	
Control		
RS-232C	9-pin x1	

Timing Chart

Resolution	H Sync (kHz)	V Sync (Hz)	Remark
640x350	31.5	70.1	
640x400	37.9	85.1	VESA
720x400	31.5	70.0	
720x400	37.9	85.1	VESA
640x480	31.5	60.0	VESA
640x480	37.9	72.8	VESA
640x480	35	66.7	Macintosh
640x480	43.3	85.0	VESA
800x600	35.2	56.3	VESA
800x600	37.9	60.3	VESA
800x600	46.9	75.0	VESA
800x600	48.1	72.2	VESA
800x600	53.7	85.1	VESA
832x624	49.7	74.5	Macintosh
1024x768	48.4	60.0	VESA
1024x768	56.5	70.1	VESA
1024x768	60.0	75.0	VESA
1024x768	68.7	85.0	VESA
1280x1024	64.0	60.0	VESA

DIMENSIONS

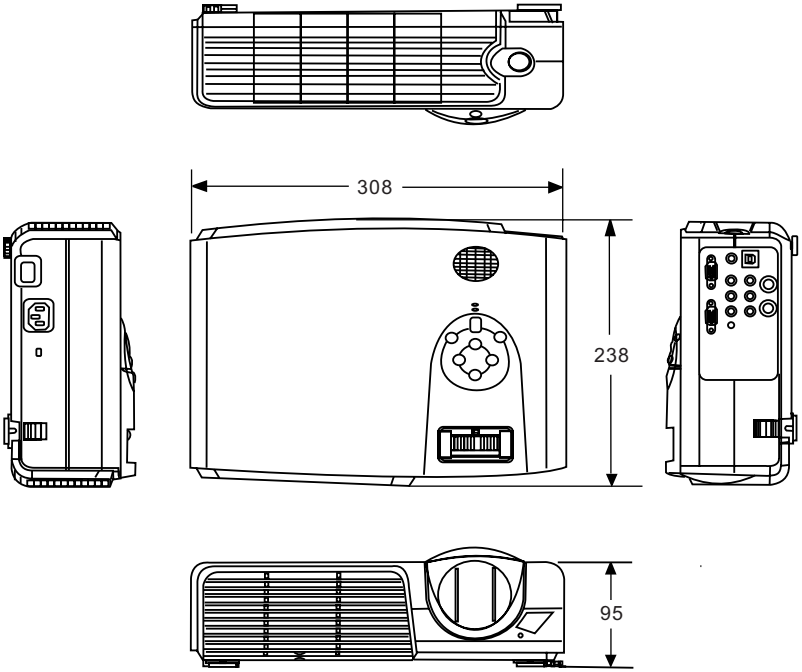

Unit: mm