USA's primary source for projector lamps
myprojectorlamps

PROJECTOR OWNER'S MANUAL

Barco

CINEVERSUM BLACKWING TWO

Need a replacement lamp for this projector?

www.myprojectorlamps.com

Original manufacturer manual, provided unmodified as a courtesy of MyProjectorLamps.com.
All trademarks belong to their respective owners.

BLACK WING TWO

User manual

R599740

CineVERSUM

Changes

CineVERSUM provides this manual 'as is' without warranty of any kind, either expressed or implied, including but not limited to the implied warranties or merchantability and fitness for a particular purpose. CineVERSUM may make improvements and/or changes to the product(s) and/or the program(s) described in this publication at any time without notice.
This publication could contain technical inaccuracies or typographical errors. Changes are periodically made to the information in this publication; these changes are incorporated in new editions of this publication.

Copyright

All right reserved. No part of this document may be copied, reproduced or translated. It shall not otherwise be recorded, transmitted or stored in a retrieval system without the prior written consent of CineVERSUM.

Guarantee

CineVERSUM provides a guarantee relating to perfect manufacturing as part of the legally stipulated terms of guarantee. On receipt, the purchaser must immediately inspect all delivered goods for damage incurred during transport, as well as for material and manufacturing faults. CineVERSUM must be informed immediately in writing of any complaints.
If the purchaser or third party caries out modifications or repairs on goods delivered by CineVERSUM, or if the goods are handle incorrectly, in particular if the systems are commissioned operated incorrectly or if, after the transfer of risks, the goods are subject to influences not agreed upon in the contract, all guarantee claims of the purchaser will be rendered invalid. Not included in the guarantee coverage are system failures which are attributed to programs or special electronic circuitry provided by the purchaser, e.g. interfaces. Normal wear as well as normal maintenance are not subject to the guarantee provided by CineVERSUM either.
The environmental conditions as well as the servicing and maintenance regulations specified in this manual must be complied with by the customer.

Trademarks

Brand and product names mentioned in this manual may be trademarks, registered trademarks or copyrights of their respective holders. All brands and product names mentioned in this manual serve as comments or examples and are not to be understood as advertising for the products of their manufactures.

TABLE OF CONTENTS

1.0 PACKAGING AND DIMENSIONS 6
1.1 Box content 6
1.2 Projector Packaging 6
Way of Packaging 6
To unpack 6
1.3 Projector Dimensions 6

2.0 SAFETY INSTRUCTIONS 7
2.1 Important information 7
Lead-free regulation 7
Information for Users on Disposal of Old Equipment 7
About burning-in of the D-ILA device 7
About the installation place 7
2.2 Important safeguards 7
2.3 REGIONAL SPECIFIC INFORMATION 9
FCC INFORMATION (USA ONLY) 9

3.0 INSTALLATION GUIDELINES 10
3.1 Viewing Conditions 10
3.2 Environment of Use 10
Mounting this unit to the ceiling 10
Installation Environment 10
Precautions of Usage 10
3.3 Air-Flow and Space Requirements 11
3.4 Ceiling mounting the unit 12
Precautions for Ceiling-mount 12
3.5 Projection Distance and Offset Setting 12
Projection Distance 12
Vertical and Horizontal Offset Setting 13

4.0 REMOTE CONTROL UNIT (RCU) 16
4.1 General view 16
4.2 Loading and replacing batteries 16
4.3 How to use the remote control unit 17

5.0 GETTING STARTED 18
5.1 General View 18
Front side 18
Rear side 18
5.2 Connecting the Power Cord 18
5.3 Focus and Zoom Adjust 19
5.4 Operating LEDs 20
5.5 Operating and Navigation Buttons 21

6.0 CONNECTIONS 22
6.1 The BlackWing Two PRO Version 22
6.2 Connecting a device with Digital Output 22
Connecting a device with DVI-D Output 22
Connecting to a device with HDMI Output 23
6.3 Connecting a device with S-Video Output 23
6.4 Connecting a device with Video Output 23
6.5 Connecting a device with Component Output 24
6.6 Connecting a device with SCART Output (European market) 24
6.7 Automation and control port: RS-232 Input. 24

7.0 MENU AND PICTURE SETTING 25
7.1 How to start up the Menu 25
Box like Menu Structure 25
How to activate the Menu Structure 25
How to select an Item and make an Adjustment 25

7.2 Menu Structure 26
7.3 Image Menu 28
Contrast 28
Brightness 28
Color 28
Tint 28
Sharpness 28
DNR 28
Color Temp 28
Gamma 29
Offset 29
Pixel Adjust 29
7.4 Setup Menu 29
Image Profile 29
Profile Memory 29
Picture Position 29
Picture Shift setting 29
HDMI Input Level 29
Mask 30
7.5 Custom Image Profile 30
Parameters stored into an Image Profile 30
Setting a new Image Profile 30
7.6 Video Menu 30
COMP 30
HDMI Color Space 31
Aspect 31
Film Mode 31
Color System 31
Black Level 31
7.7 Install Menu 31
Menu Position 31
Menu Display 31
Line Display 31
Flip H. 31
Flip V. 31
High Altitude 31
7.8 Function Menu 32
Back Color 32
Sleep Timer 32
D-ILA Logo 32
Lamp Power 32
Test Pattern 32
Language 32
7.9 Information Menu 32
Input 32
Source 32
Lamp Time 32

8.0 MAINTENANCE 33
8.1 Clean Dirt on the Cabinet 33
Caution 33
8.2 Dirt on the Lens 33
8.3 Replacing the Lamp 33
Light-source Lamp and Lamp Usage Time 33
Procedure for Lamp Replacement 34
Resetting Lamp Time 34
8.4 Cleaning and Replacing the Dust Filter 34
Pull out the plug from the power outlet 34
Remove the inner filter 34
Clean the filter 35

Reinstall the inner filter 35
8.5 Troubleshooting 35
On Screen Warnings 35
LED Warning 36
Before sending the projector to repair 37
9.0 MISCELLANEOUS 38
9.1 RS-232C input 38
Pin Assignment 38
External Control 38
Communication Specifications 38
Command Format 38
Response data format 38
Available Commands and Parameters 39
9.2 Specifications 41
Overview 41
Dimensions 42

1.0 PACKAGING AND DIMENSIONS

1.1 Box content

The following accessories are packed together with this unit. Please confirm all items.
If any item is missing, please contact your dealer.

- 1 CineVERSUM Full HD projector, model BlackWing Two (R9010086)
- 1 User Manual (R599740)
- 1 Remote control unit RCU
- 1 Power Cord
- 2 AAA size batteries

1.2 Projector Packaging

Way of Packaging

The projector is packed in a carton box. To provide protection during transportation, the projector is surrounded with foam. The package is secured with banding and fastening clips.

To unpack

a) Pull off the adhesive tape or cut the adhesive tape but take care not to insert the knife too deep otherwise the projector can be damaged.

b) Take the projector out of its shipping carton, remove the foam rubber and place it on a table.

1.3 Projector Dimensions

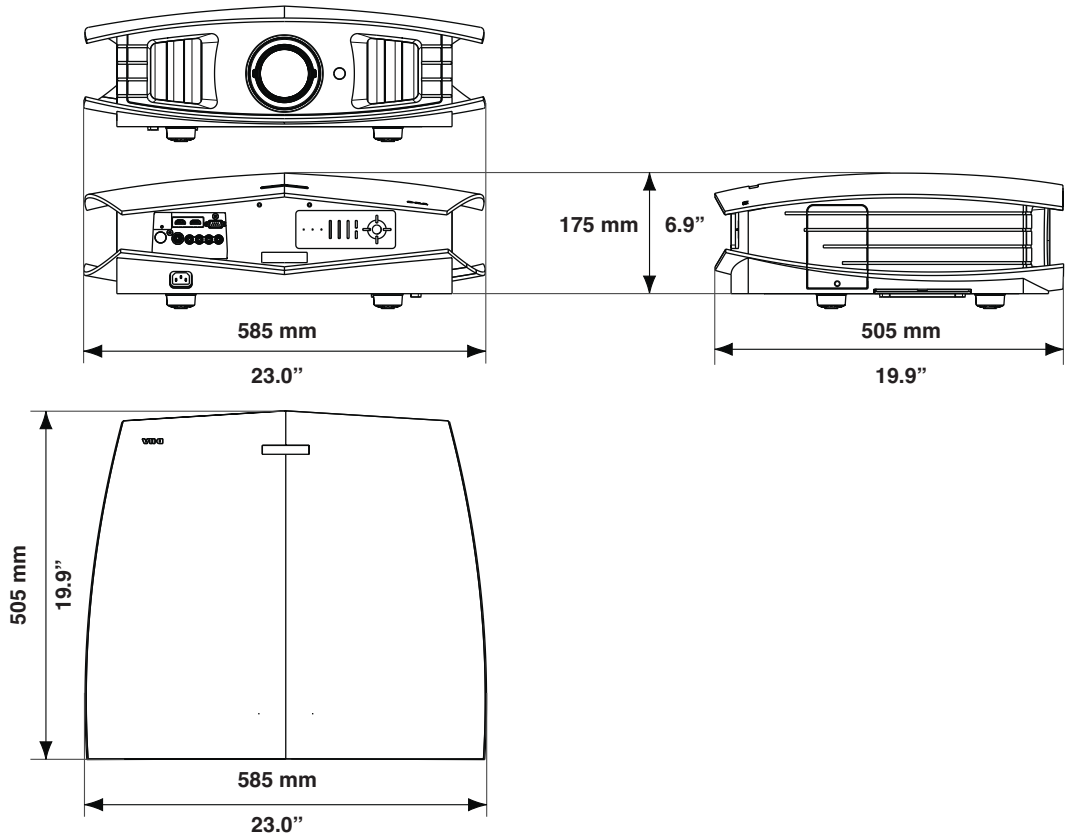

2.0 SAFETY INSTRUCTIONS

2.1 Important information

Lead-free regulation

This product has a High Intensity Discharge (HID) lamp that contains a small amount of mercury. It also contains lead in some components.
Disposal of these materials may be regulated in your community due to environmental considerations. For disposal or recycling information please contact your local authorities, or the Electronics Industries Alliance: http://www.eiae.org.

Information for Users on Disposal of Old Equipment

This symbol indicates that the electrical and electronic equipment should not be disposed as general household waste at its end of life. Instead, the product should be handed over to the applicable collection point for the recycling of electrical and electronic equipment for proper treatment, recovery and recycling in accordance with your national legislation.
By disposing of this product correctly, you will help to conserve natural resources and will help prevent potential negative effects on the environment and human health which could otherwise be caused by inappropriate waste handling of this product.
For more information about collection point and recycling of this product, please contact your local municipal office, your household waste disposal service or the shop where you purchased the product. Penalties may be applicable for incorrect disposal of this waste, in accordance with national legislation.

Other Countries outside the European Union:

If you wish to dispose of this product, please do so in accordance with applicable national legislation or other rules in your country for the treatment of old electrical and electronic equipment.

About burning-in of the D-ILA device

Do not allow the same still picture to be projected for a long time or an abnormally bright video picture to be projected. Do not project video images with high-intensity or high contrast on a screen. The video image could be burnt into the D-ILA device.
Use special care when projecting video games or computer program images. There is no problem with ordinary video-cassette playback images.

About the installation place

Do not install the projector in a place that cannot support its weight securely.
If the installation place is not sturdy enough, the projector could fall or overturn, possibly causing personal injury.

CAUTION:
To reduce the risk of electric shock, do not remove cover. Refer servicing to qualified service personnel. This projector is equipped with a 3-blade grounding type plug to satisfy FCC rule. If you are unable to insert the plug into the outlet, contact your electrician.

WARNING:
To prevent fire or shock hazards, do not expose this appliance to rain or moisture. This apparatus must be earthed.

2.2 Important safeguards

Electrical energy can perform many useful functions. This unit has been engineered and manufactured to assure your personal safety. **But IMPROPER USE CAN RESULT IN POTENTIAL ELECTRICAL SHOCK OR FIRE HAZARD.** In order not to defeat the safeguards incorporated into this product, observe the following basic rules for its installation, use and service.

The power input is auto-ranging from 100 to 240 VAC.

Please read these Important Safeguards carefully before use.

- All the safety and operating instructions should be read before the product is operated.

- All warnings on the product and in the operating instructions should be adhered to.
- All operating instructions should be followed.
- Place the projector near a wall outlet where the plug can be easily unplugged.
- Unplug this product from the wall outlet before cleaning. Do not use liquid cleaners or aerosol cleaners. Use a damp cloth for cleaning.
- Do not use attachments not recommended by the product manufacturer as they may be hazardous.
- Do not use this product near water. Do not use immediately after moving from a low temperature to high temperature, as this causes condensation, which may result in fire, electric shock, or other hazards.
- Do not place this product on an unstable cart, stand, or table. The product may fall, causing serious injury to a child or adult, and serious damage to the product. The product should be mounted according to the manufacturer's instructions, and should use a mount recommended by the manufacturer.
- When the product is used on a cart, care should be taken to avoid quick stops, excessive force, and uneven surfaces which may cause the product and cart to overturn, damaging equipment or causing possible injury to the operator.
- Slots and openings in the cabinet are provided for ventilation. These ensure reliable operation of the product and protect it from overheating. These openings must not be blocked or covered. (The openings should never be blocked by placing the product on bed, sofa, rug, or similar surface. It should not be placed in a built-in installation such as a bookcase or rack unless proper ventilation is provided and the manufacturer's instructions have been adhered to). For proper ventilation, separate the product from other equipment, which may prevent ventilation and keep a distance of more than 5-9" (150 mm).
- This product should be operated only with the type of power source indicated on the label. If you are not sure of the type of power supply to your home, consult your product dealer or local power company.
- This product is equipped with a three-wire plug. This plug will fit only into a grounded power outlet. If you are unable to insert the plug into the outlet, contact your electrician to install the proper outlet. Do not defeat the safety purpose of the grounded plug.
- Power-supply cords should be routed so that they are not likely to be walked on or pinched by items placed upon or against them. Pay particular attention to cords at doors, plugs, receptacles, and the point where they exit from the product.
- For added protection of this product during a lightning storm, or when it is left unattended and unused for long periods of time, unplug it from the wall outlet and disconnect the cable system. This will prevent damage to the product due to lightning and power line surges.
- Do not overload wall outlets, extension cords, or convenience receptacles on other equipment as this can result in a risk of fire or electric shock.
- Never push objects of any kind into this product through openings as they may touch dangerous voltage points or short out parts that could result in a fire or electric shock. Never spill liquid of any kind on the product.
- Do not attempt to service this product yourself as opening or removing covers may expose you to dangerous voltages and other hazards. Refer all service to qualified service personnel.
- Unplug this product from the wall outlet and refer service to qualified service personnel under the following conditions:

a) When the power supply cord or plug is damaged.

b) If liquid has been spilled, or objects have fallen on the product.

c) If the product has been exposed to rain or water.

d) If the product does not operate normally by following the operating instructions. Adjust only those controls that are covered by the Operation Manual, as an improper adjustment of controls may result in damage and will often require extensive work by a qualified technician to restore the product to normal operation.

e) If the product has been dropped or damaged in any way.

f) When the product exhibits a distinct change in performance - this indicates a need for service.

- When replacement parts are required, be sure the service technician has used replacement parts specified by the manufacturer or with same characteristics as the original part. Unauthorized substitutions may result in fire, electric shock, or other hazards.
- Upon completion of any service or repairs to this product, ask the service technician to perform safety checks to determine that the product is in proper operating condition.
- The product should be placed more than one foot away from heat sources such as radiators, heat registers, stoves, and other products (including amplifiers) that produce heat.
- When connecting other products such as VCR's, and personal computers, you should turn off the power of this product for protection against electric shock.
- Do not place combustible behind the cooling fan. For example, cloth, paper, matches, aerosol cans or gas lighters that present special hazards when over heated.
- Do not look into the projection lens while the illumination lamp is turned on. Exposure of your eyes to the strong light can result in impaired

eyesight.

- Do not look into the inside of this unit through vents (ventilation holes), etc. Do not look at the illumination lamp directly by opening the cabinet while the illumination lamp is turned on. The illumination lamp also contains ultraviolet rays and the light is so powerful that your eyesight can be impaired.
- Do not drop, hit, or damage the light-source lamp (lamp unit) in any way. It may cause the light-source lamp to break and lead to injuries. Do not use a damaged light source lamp. If the light-source lamp is broken, ask your dealer to repair it. Fragments from a broken light-source lamp may cause injuries.
- The light-source lamp used in this projector is a high pressure mercury lamp. Be careful when disposing of the light source lamp. If anything is unclear, please consult your dealer.
- Do not ceiling-mount the projector to a place which tends to vibrate; otherwise, the attaching fixture of the projector could be broken by the vibration, possibly causing it to fall or overturn, which could lead to personal injury.
- Use only the accessory cord designed for this product to prevent shock.
- The power supply voltage rating of this product is AC120 V, AC100 V – AC240 V, the power cord attached conforms to the following power supply voltage. Use only the power cord designated by our dealer to ensure Safety and EMC.
- When it is used by other power supply voltage, power cable must be changed.
- Ensure that the power cable used for the projector is the correct type for the AC outlet in your country. Consult your product dealer.
- **Caution:** Do not allow any unqualified person to install the unit. Be sure to ask your dealer to install the unit (e.g. attaching it to the ceiling) since special technical knowledge and skills are required for installation. If installation is performed by an unqualified person, it may cause personal injury or electrical shock.

2.3 REGIONAL SPECIFIC INFORMATION

FCC INFORMATION (USA ONLY)

Changes or modification not approved by CineVERSUM could void the user's authority to operate the equipment.
Note: This equipment has been tested and found to comply with the limits for Class B digital devices, pursuant to Part 15 of the FCC Rules. These limits are designed to provide reasonable protection against harmful interference in a residential installation. This equipment generates, uses, and can radiate radio frequency energy and, if not installed and used in accordance with the instructions, may cause harmful interference to radio communications. However, there is no guarantee that interference will not occur in a particular installation. If this equipment does cause harmful interference to radio or television reception, which can be determined by turning the equipment off and on, the user is encourage to try to correct the interference by one or more of the following measures:

- Reorient or relocate the receiving antenna.
- Increase the separation between the equipment and receiver.
- Connect the equipment into an outlet on a circuit different from that to which the receiver is connected.
- Consult the dealer or an experienced radio/TV technician for help.

FCC

The Federal Communications Commission (FCC) is an independent United States government agency, created, directed, and empowered by Congressional statute.
The FCC was established by the Communications Act of 1934 as the successor to the Federal Radio Commission and is charged with regulating all non-Federal Government use of the radio spectrum, including radio and television broadcasting, and all interstate telecommunications like wire, satellite and cable as well as all international communications that originate or terminate in the United States. The FCC's jurisdiction covers the 50 states, the District of Columbia, and U.S. possessions.

3.0 INSTALLATION GUIDELINES

3.1 Viewing Conditions

Brightness of the room

Avoid direct exposure of screen to direct sunlight and illumination. Block light using a curtain. Images can be well projected by darkening the brightness of the room.

Do not view screen for prolonged hours.

Looking at the screen continually for a prolonged time will cause your eyes to get tired. Allow your eyes to rest at intervals.

Do not use this unit when image flickers

This may cause your eyesight to deteriorate.

3.2 Environment of Use

- Do not use this unit in rooms with cigarette smoke or oily smoke. This may cause the unit to malfunction.

Mounting this unit to the ceiling

Check temperature around the unit. When a heater is in use, the ceiling may reach a temperature higher than anticipated, hence leading to malfunction of the unit.

Installation Environment

This unit is a precision device. Do not install it at the following places. Doing so may cause fire or malfunction of the unit.

- Where there is water, humidity or dust.
- Where the unit may be subjected to oily or cigarette smoke.
- On a soft surface such as carpet or cushion.
- Where the unit may be subjected to high temperature due to direct sunlight.
- When temperature is high or low.

Operation temperature range: +5°C to +35°C.
Storage temperature range: -10°C to +60°C.
Relative humidity range 20% to 80% (without condensation).

Precautions of Usage

This unit makes use of a light source lamp that may reach a high temperature during projection. Do not allow projection under the following conditions. Doing so may cause fire or malfunction of the unit.

- Projection with the unit laid on sides.
- Projection with the unit installed in an unreasonable angle. Avoid using this unit at an angle of more than 5° horizontally and 25° vertically. Doing so may cause unevenness in the color or shorten the lamp life.
- Projection at a location that blocks the air inlets or exhaust vents.
- Projection at a place exposed to air blasts from an air conditioner.

3.3 Air-Flow and Space Requirements

This unit can be installed in table position. Make sure that the unit is installed within the space requirements described below.

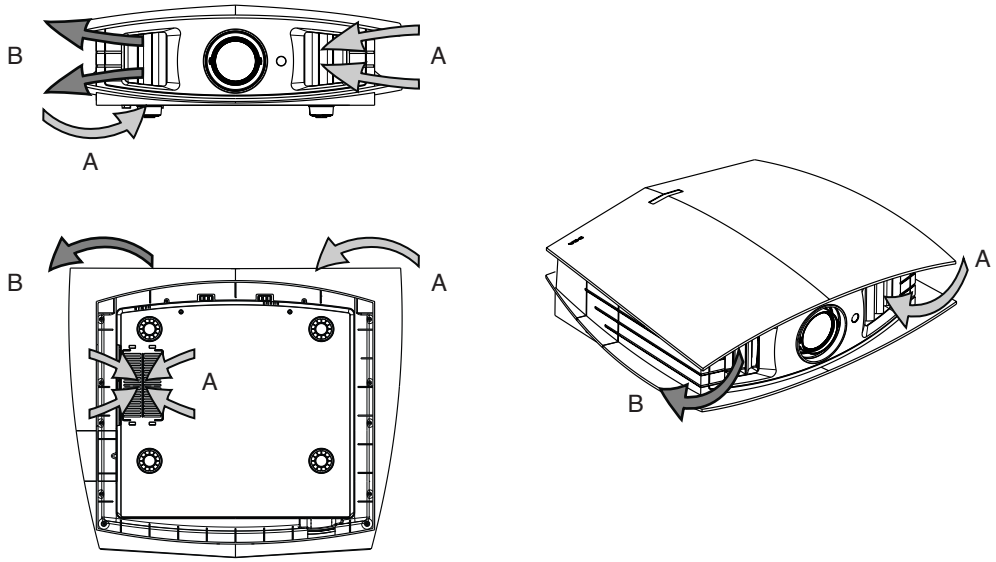

- A: Air inlets
- B: Air outlets

Air flow

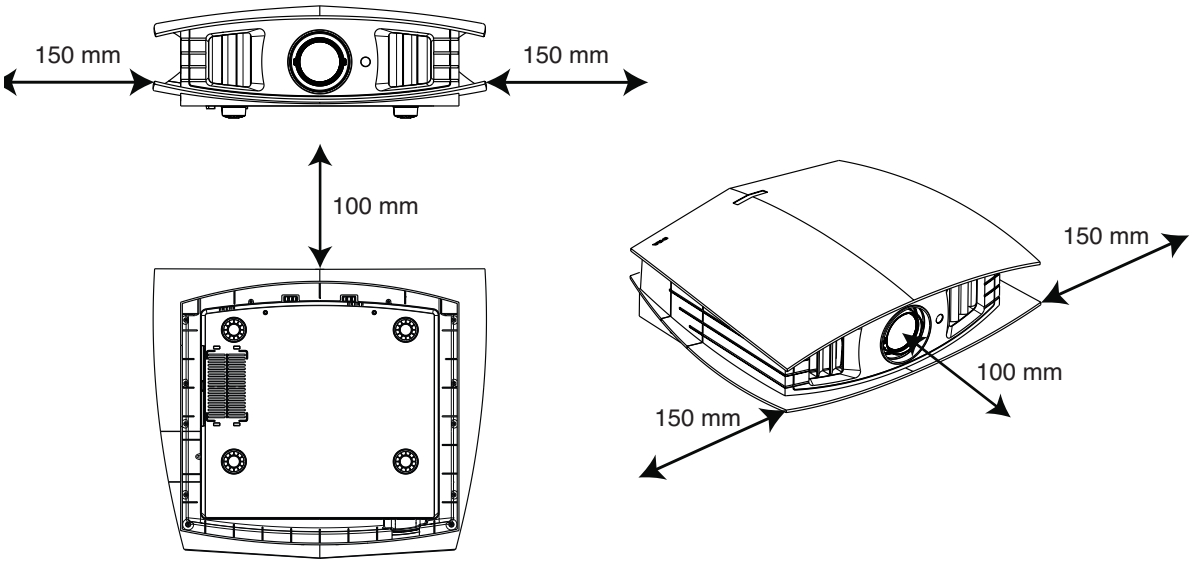

Space requirements

3.4 Ceiling mounting the unit

When mounting of this unit is required, do so by removing the 4 feet and make use of the 4 screw holes (M5 screws) at the bottom of this unit. Allow sufficient space around the air inlets to avoid blocking them.

Precautions for Ceiling-mount

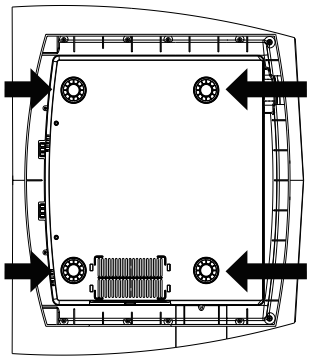

- To ceiling-mount this unit, special expertise and techniques are necessary. Be sure to ask your dealer or specialist to perform mounting.
- Do not mount at places that may be subjected to vibration and shock.
- Depth of the screw holes (screw length) is 30 mm. Use screws shorter than 30 mm but longer than 19 mm.
- Install at a safe place in case this unit or a part of it may drop. If the light-source lamp is broken, small pieces of glass from the mesh of the filter may appear outside the unit.
- Regardless whether the unit is still under guarantee, CineVERSUM is not liable for any product damage caused by mounting the unit with third party ceilling mount or when the environment is not suitable for ceiling-mount.

3.5 Projection Distance and Offset Setting

Projection Distance

Projection Screen Size Diagonal size (Aspect Ratio 16:9)	Projection Screen Size Base size (Aspect Ratio 16:9)	Projection Screen Height (Aspect Ratio 16:9)	BlackWing Two
			Projecting Distance minimum - maximum
50" (1270 mm)	43,6" (1107 mm)	24,5" (623 mm)	1518 mm - 3050 mm
60" (1524 mm)	52,3" (1328 mm)	29,4" (747 mm)	1821 mm - 3659 mm
70" (1778 mm)	61,0" (1550 mm)	34,3" (872 mm)	2125 mm - 4269 mm
83" (2108 mm)	72,3" (1837 mm)	40,7" (1034 mm)	2519 mm - 5062 mm
92" (2337 mm)	80,2" (2037 mm)	45,1" (1146 mm)	2792 mm - 5611 mm
100" (2540 mm)	87,2" (2214 mm)	49,0" (1245 mm)	3035 mm - 6099 mm
110" (2794 mm)	95,9" (2435 mm)	53,9" (1370 mm)	3339 mm - 6709 mm
138" (3505 mm)	120,3" (3055 mm)	67,7" (1718 mm)	4188 mm - 8417 mm
150" (3810 mm)	130,7" (3321 mm)	73,5" (1868 mm)	4553 mm - 9149 mm
180" (4572 mm)	156,9" (3985 mm)	88,2" (2241 mm)	5463 mm - 10978 mm
200" (5080 mm)	174,3" (4428 mm)	98,1" (2491 mm)	6070 mm -12198 mm
250" (6350 mm)	218" (5535 mm)	122,6" (3113 mm)	7588 mm - 15248 mm

- The projection screen sizes and projecting distances in the table above are provided only as a guide. Please use them as reference during installation.
- Use a projection image of 16:9 aspect ratio for setup adjustment.

Vertical and Horizontal Offset Setting

The optimum image can be obtained when the centre of this projector's lens and the screen are placed perpendicular to each other. Take note of the projection angle when placing them. Failing to do so may give rise to trapezoidal distortion of the projected image.

This unit comes with a vertical and horizontal shift to suit most installations. Make sure that your installation does not exceed 80% vertical offset and 34% horizontal offset.

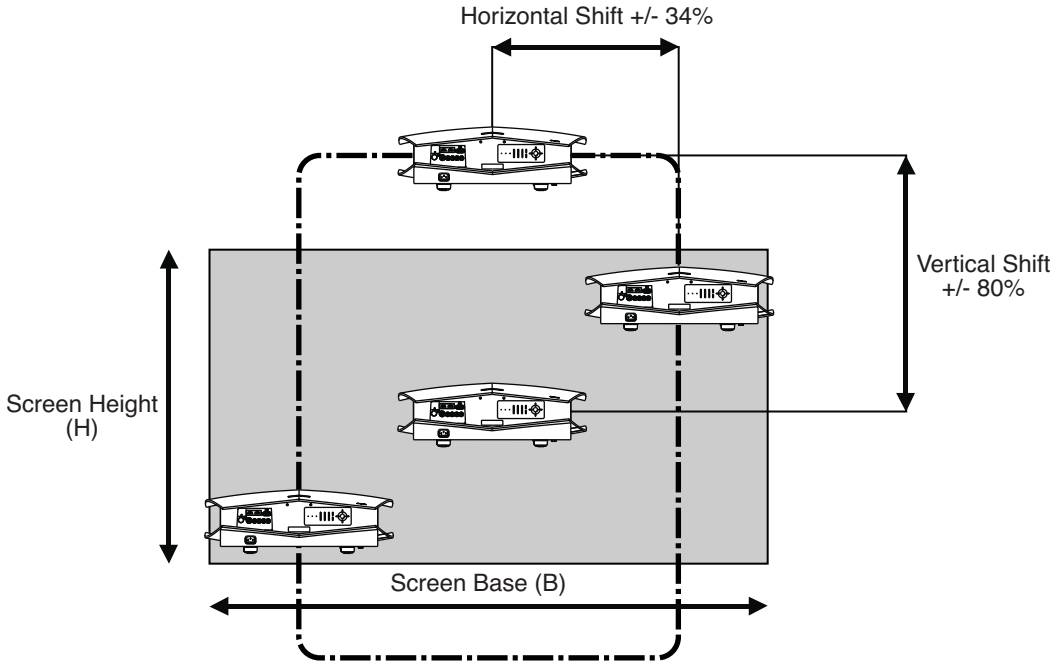

This unit comes with a optical shift that features vertical and horizontal adjustment of the projection screen position. Adjust the picture to your screen.

- The Vertical Shift level is between -80% and 80% of the Screen Height (0.80 x H).
- The Horizontal Shift level is between -34% and 34% of the Screen Base (0.34 x B).
- The shift level is set to 0% vertically and horizontally by default, that means that the optical lens is aligned with the center of the screen.
- The position of the projection screen may be out of alignment due to the gear movement.

3.5.0.1 Adjust the picture position vertically

The BlackWing Two projector has two dials to center the picture to the screen vertically and horizontally. Refer to the picture below to locate the dials.

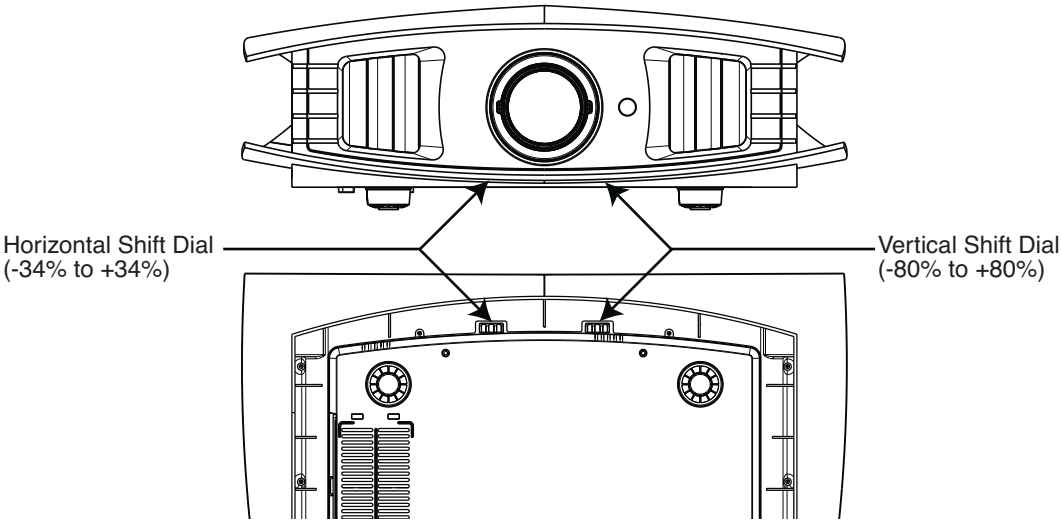

The Vertical and Horizontal shift dials are located at the bottom of the unit.

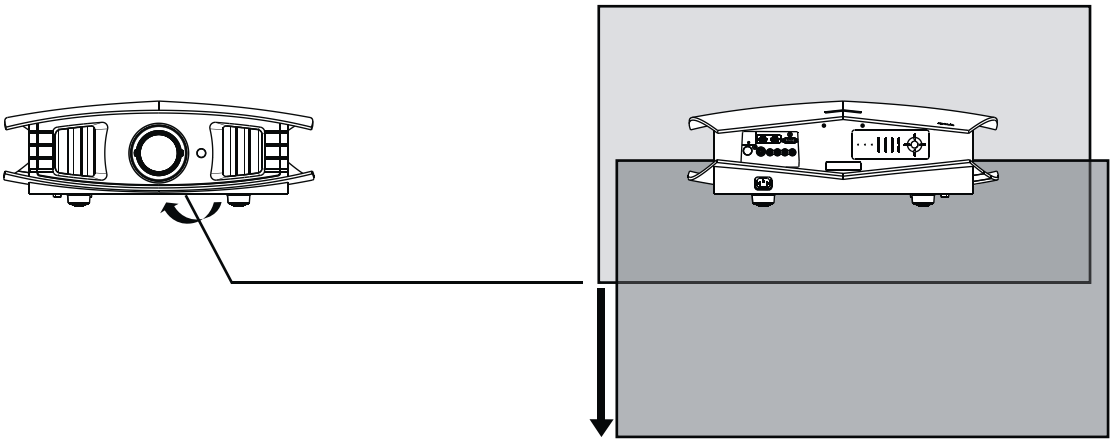

Turn clockwise to shift the picture on the screen downward.

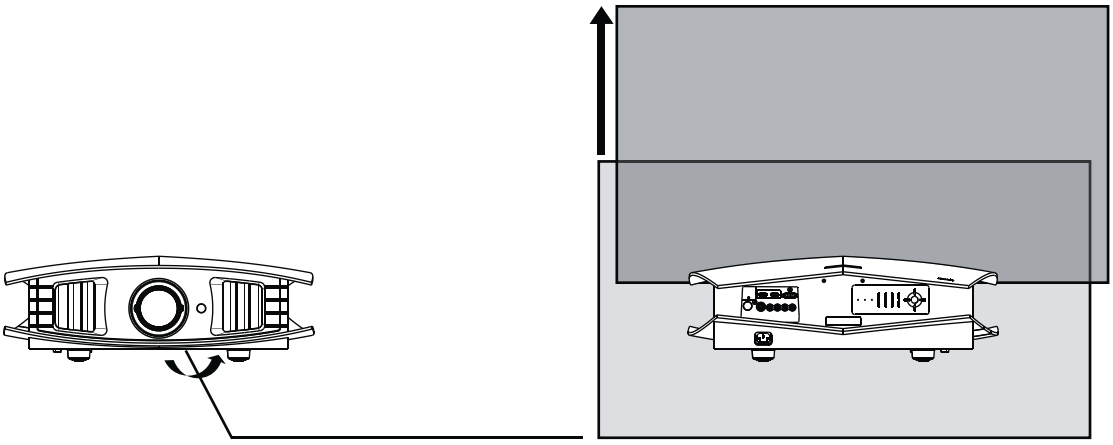

Turn anti-clockwise to shift the picture on the screen upward.

3.5.0.2 Adjust the picture position horizontally

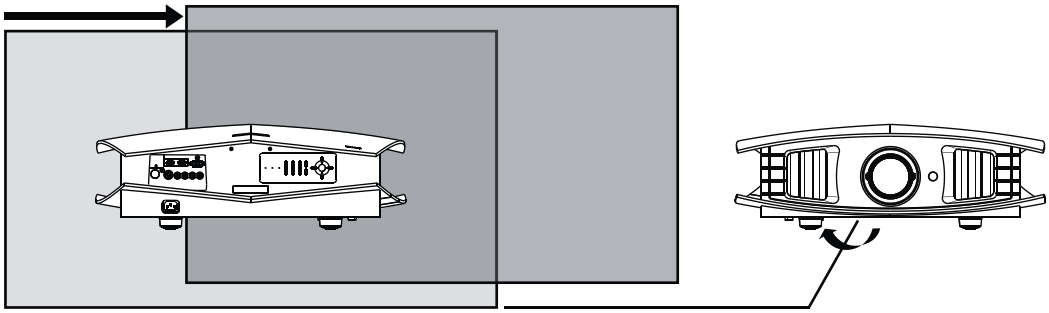

Turn clockwise to shift right the picture on the screen.

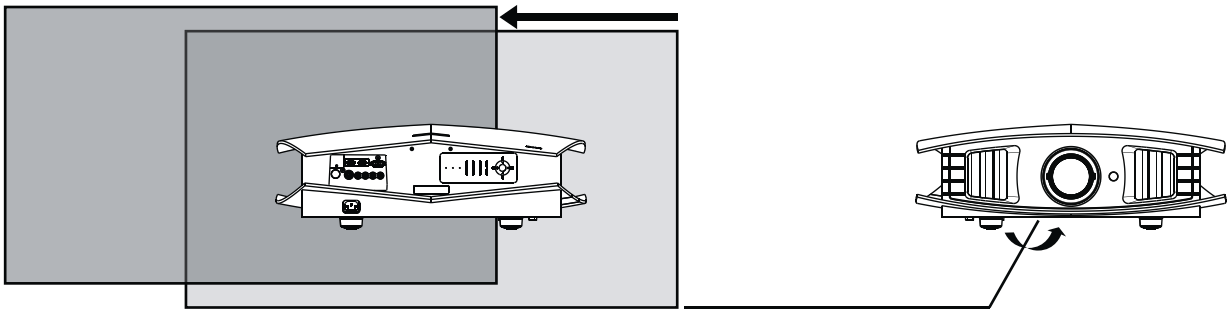

Turn anti-clockwise to shift left the picture on the screen.

4.0 REMOTE CONTROL UNIT (RCU)

4.1 General view

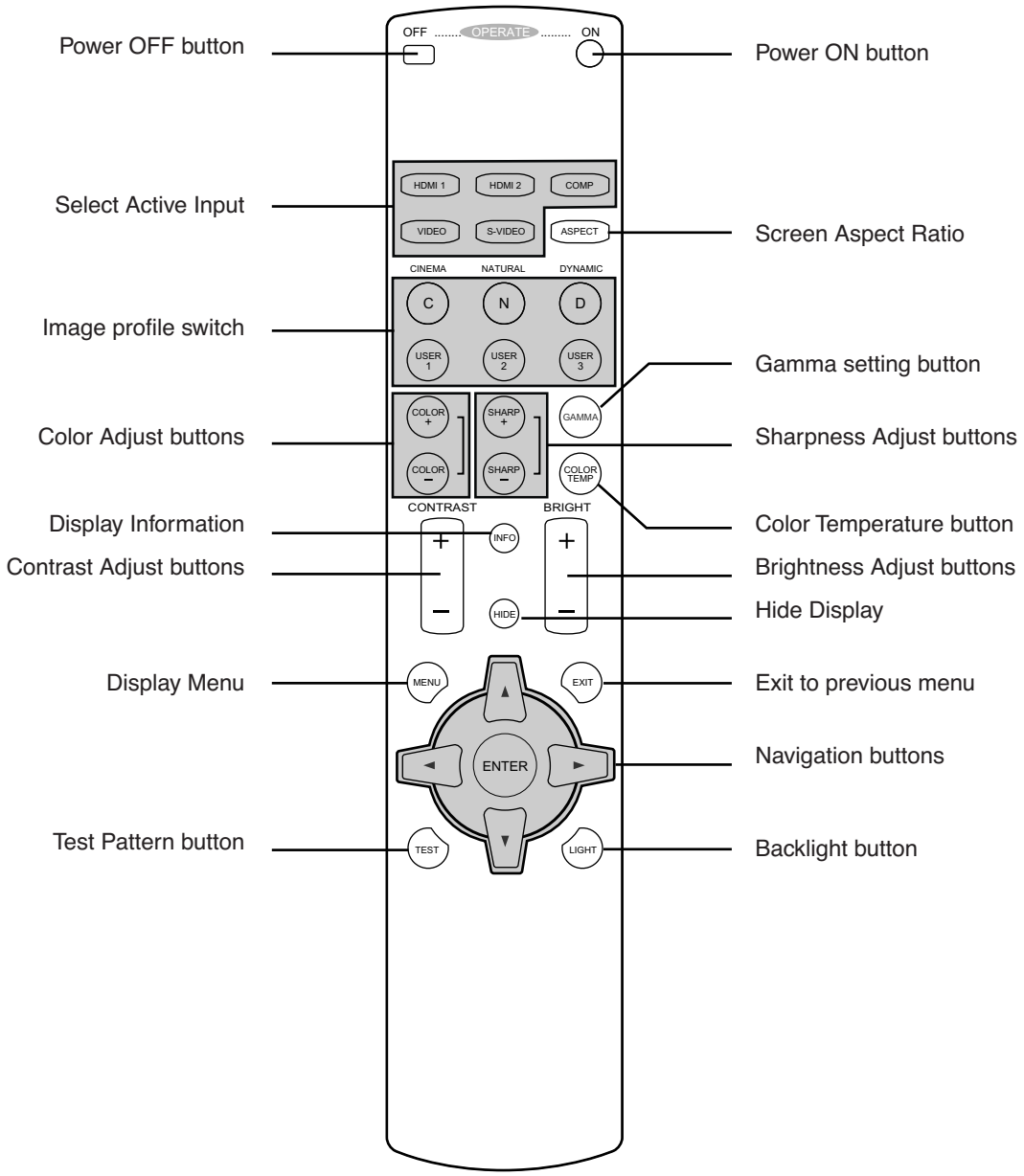

4.2 Loading and replacing batteries

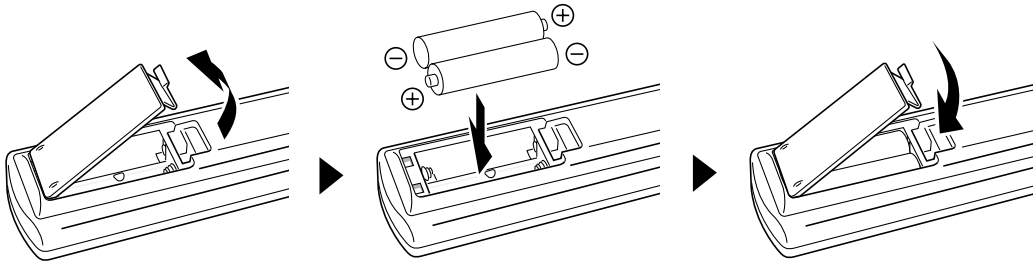

- Push the cover tab with the fingernail a little backwards and pull upwards the cover top.
  Slide the cover forward to remove.

- Push the battery body towards the spring and lift up to remove.
  Insert two AAA size batteries, making sure the polarities match the + and - marks inside the battery compartment.
- Insert the lower tab of the battery cover in the gap at the bottom of the remote control, and press the cover until it clicks in place.

CAUTION WHEN USING BATTERIES

Do not mix new and old batteries.
Do not mix different type of batteries as they are different in characteristics.
Insert batteries according to the + and - marks on the battery case.
Do not put batteries into fire or recharge them if they are not design to.
Remove the batteries if the remote control is not to be used for a prolonged period.
Use manganese batteries wherever possible, Do not use rechargeable batteries.

NOTICE

If the remote control has to be brought closer to the projector to operate, it means that the batteries are wearing out. When this happens, replace the batteries. Insert the batteries according to the + and - marks.

4.3 How to use the remote control unit

The operable distance of the remote control unit is about 7m for direct reception and within 30 degree angle with respect to the sensor.

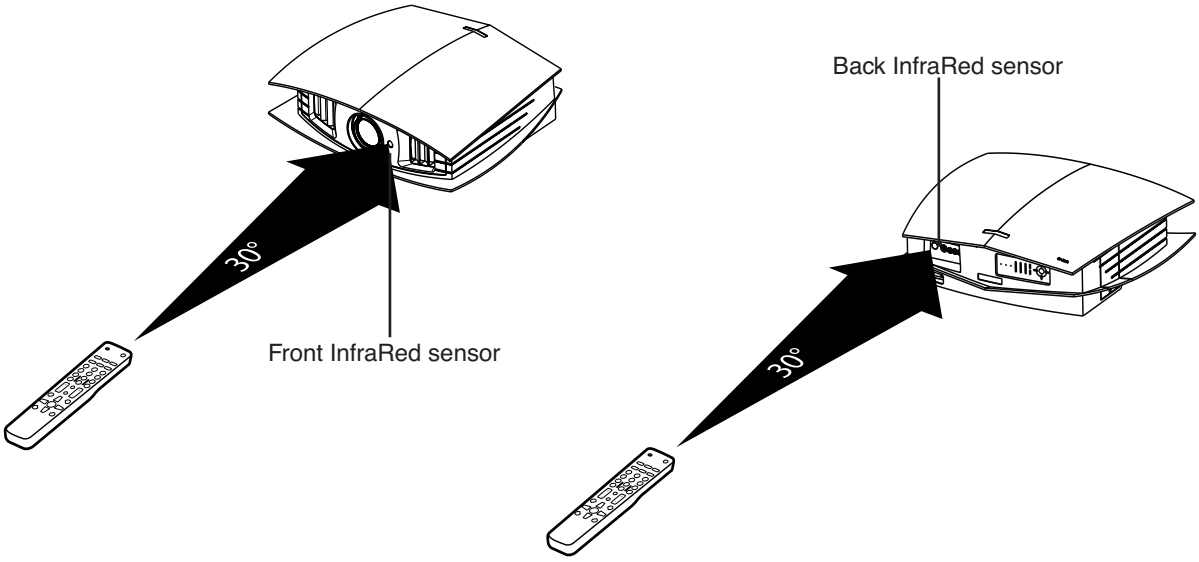

The remote control unit can be used by having the transmission signal reflected off a screen, as the effect of signals reflected from the RCU differ with the type of screen used, operable distance may decrease.

5.0 GETTING STARTED

5.1 General View

Front side

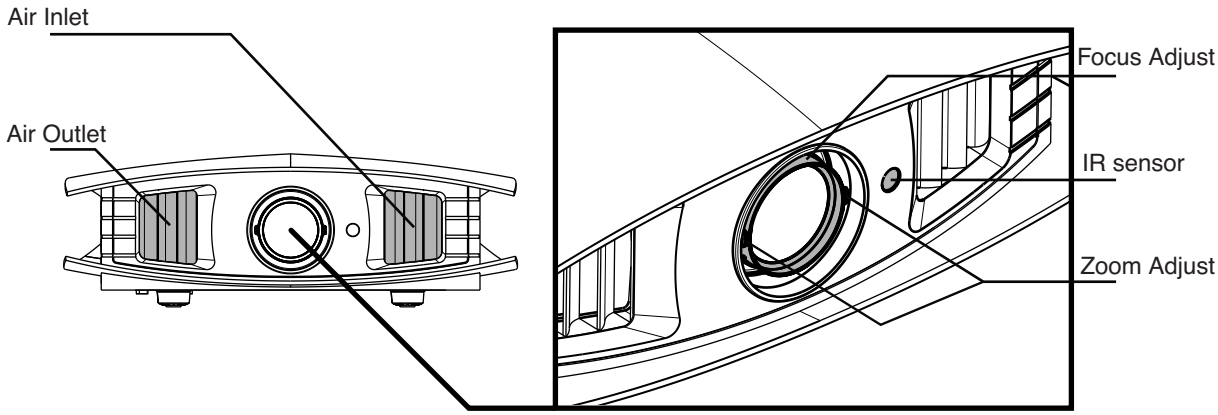

- Air Outlet / Inlet: see “Air-Flow and Space Requirements”, page 11.
- Focus and Zoom Adjust: see “Focus and Zoom Adjust”, page 19.
- This unit comes with buffer material that cushions the lens during transport. Remove the material before use.

Rear side

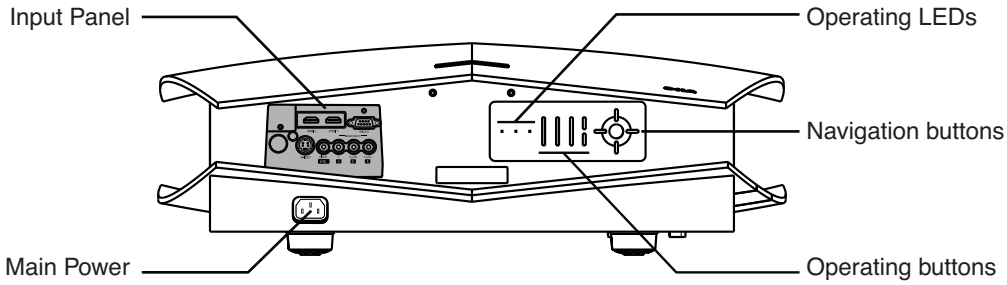

- Input Panel: see page 22.
- Main Power: connect the power cord. See below.
- Operating LEDs: see page 20 for more details.
- Operating and Navigation buttons described in section 5.5, page 21.

5.2 Connecting the Power Cord

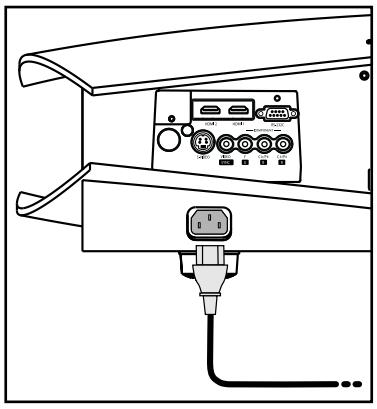

•Before plugging in the Power Cord, ensure that all devices have been connected.

•Connect the power cord to the power input terminal of the projector.

CAUTION AGAINST FIRE AND ELECTRIC SHOCK

Since the power consumption of this unit is high, insert the power plug directly into a wall outlet.
When not using devices, remove the power plug from the wall outlet.
Do not use power cords for connection other than specified.
Do not use a power voltage different from that which is indicated.
Do not cut, tear or modify the power cords. Also, do not place a heavy object on, heat or stretch the power cords as this may cause damage to the cords.
Do not insert or pull plugs with a wet hand.

5.3 Focus and Zoom Adjust

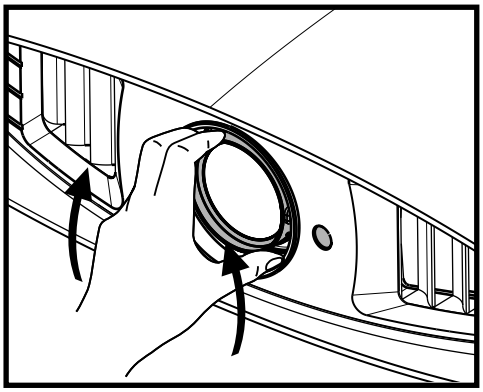

Focus Adjust

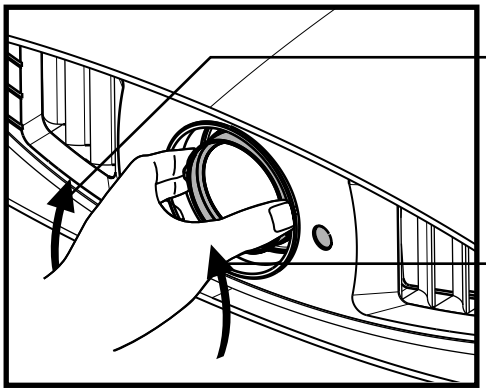

Zoom Adjust

5.4 Operating LEDs

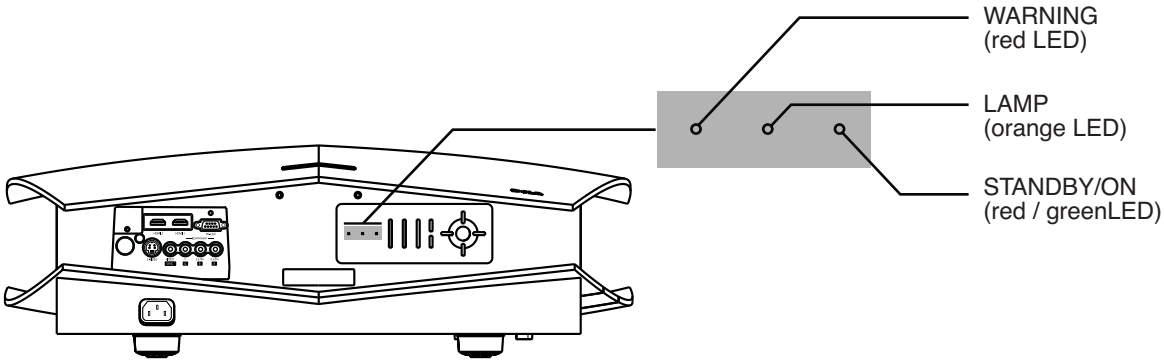

Operating LED			Description
WARNING	**LAMP**	**STANDBY /ON**	
Off	Off	Light On (red)	Unit is in standby mode
Off	Off	Light On (green)	Unit is in operate mode (during projection)
Off	Off	Blinking (green)	The video image is temporarily cleared upon pressing the [HIDE] button during projection.
Off	Off	Blinking (red)	Unit is in CooL Down* mode (when cooling lamp)
Light On (red)	Off	-	An error occurred during operation, the projector will enter Cool Down* mode.
Off	Light On (orange)	-	Lamp replacement is near (Lamp usage time has exceeded 1900 hours)
Light On (red)	Blinking (orange)	-	An error occurred with the lamp or the lamp cover.

ABOUT COOL DOWN MODE

After projection or when warning occurred, the heated lamp will go through a 60-seconds cool-down process known as the Cool Down mode. This function is to prevent damage and deformation from the heated lamp may cause to the internal components of the projector. It also prevents lamp breakage and shortened lamp life.
The Cool Down mode is indicated by the blinking red [STANDBY/ON] Indicator. When in Cool Down mode, the projector cannot be turned ON for 60 seconds.
After the Cool Down process is completed, the unit will automatically switch to the Standby mode.

CAUTION

When in Cool Down mode, do not pull out the plug from the outlet. Also, do not block the air inlets/exhaust vents by standing the projector on its end or laying it on its side.

5.5 Operating and Navigation Buttons

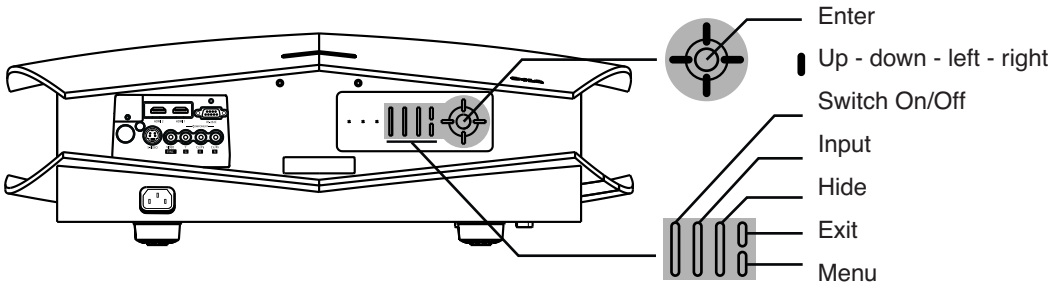

Button	Description
Enter	To select or confirm.
Up - down - left - right	To navigate into On Screen Display Menu.
Switch On/Off	To turn On or Off the projector.
Input	To switch the input selection.
Hide	To hide temporary the picture.
Exit	To return to previous menu or cancel action.
Menu	To display On Screen Display (OSD) Menu.

6.0 CONNECTIONS

The BlackWing Two can be connected to any compatible devices. The available inputs are:

- 2x HDMI revision 1.2 with HDCP
- 1x S-Video (or Composite)
- 1x Video
- 1x Component (YCbCr or YPbPr or RGB or SCART with adapter)

The RS-232C terminal can be used for automation or software updates.
During the connection, make sure that the unit is powered OFF.
For audio output, connect your audio video source to an amplifier.

6.1 The BlackWing Two PRO Version

To get the best performances, the BlackWing Two PRO features an external high-definition video processor with VRS technology. The projection system would accept up to twelve different multi-standard sources. Each source is automatically de-interlaced and upscaled to the BlackWing Two's native resolution using the latest technology in video processing.
Get with the PRO Version:

- 4 plug and play HDMI inputs.
- Up to 12 inputs: 4x HDMI, 2x Video, 2x S-Video, 2 Component, 1 RGBHV and D-SDI input
- 2 dedicated Game modes for low latency
- Film-grade video processing algorithms
- 12 Volt screen trigger

6.2 Connecting a device with Digital Output

The two HDMI inputs fully support HDMI 1.2 revision and are compatible with HDCP protection. You can connect this unit to a HDMI 1.3 video source configured to output a signal coded up to 24 color bits per pixel.

Connecting a device with DVI-D Output

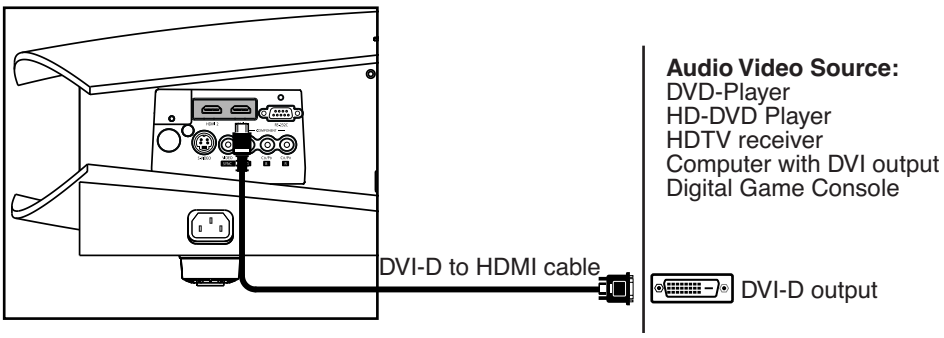

Connecting to a device with HDMI Output

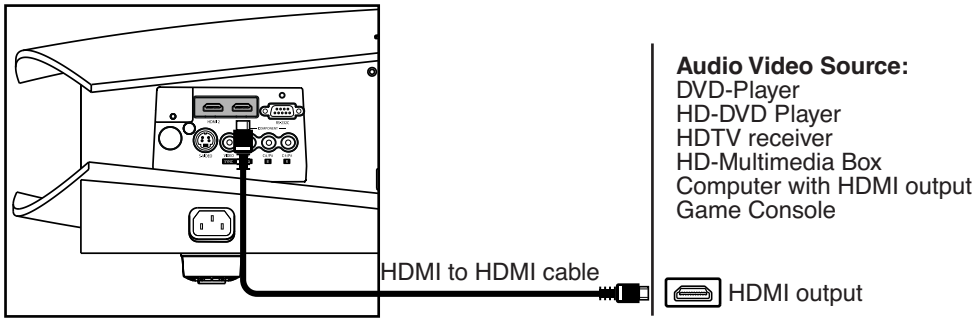

Make sure to use a good quality cable, especially when the distance between the different devices are longer than 5 meters. If it is the case, the use of a split system or optical fiber cable is highly recommended.

6.3 Connecting a device with S-Video Output

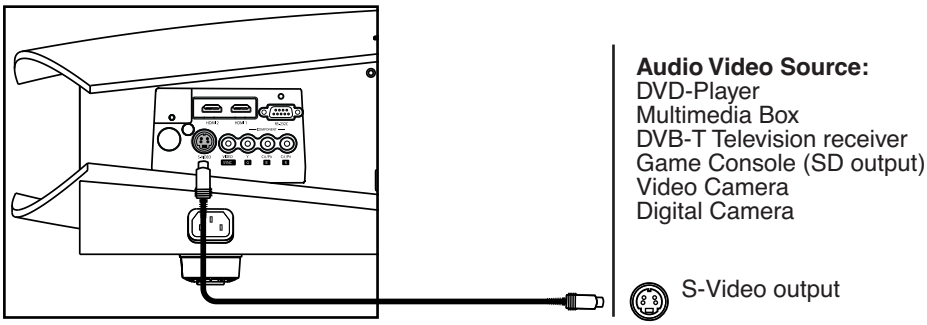

6.4 Connecting a device with Video Output

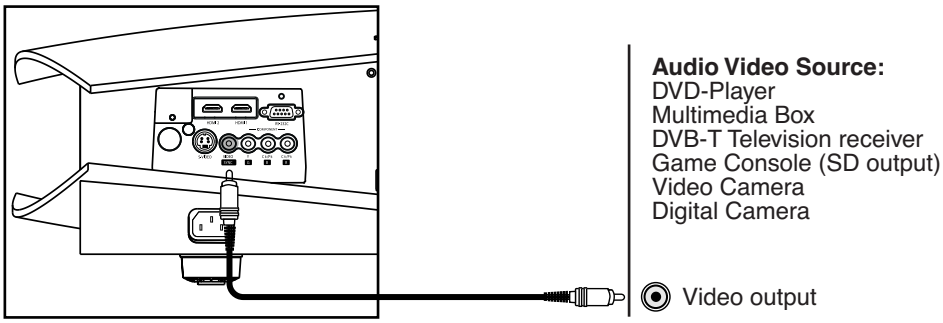

6.5 Connecting a device with Component Output

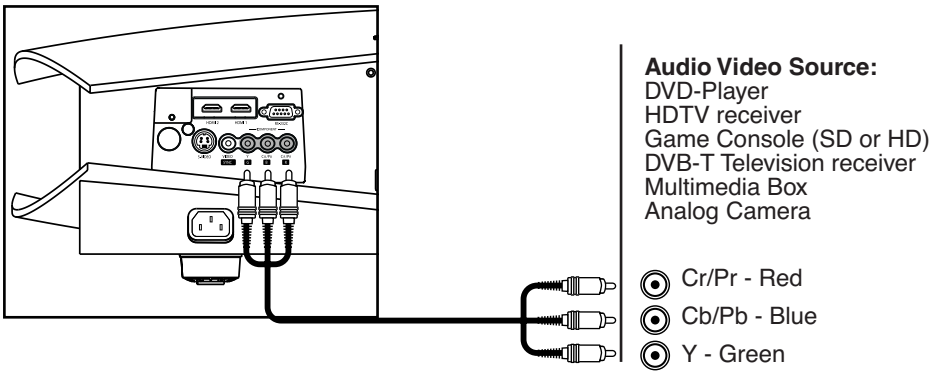

6.6 Connecting a device with SCART Output (European market)

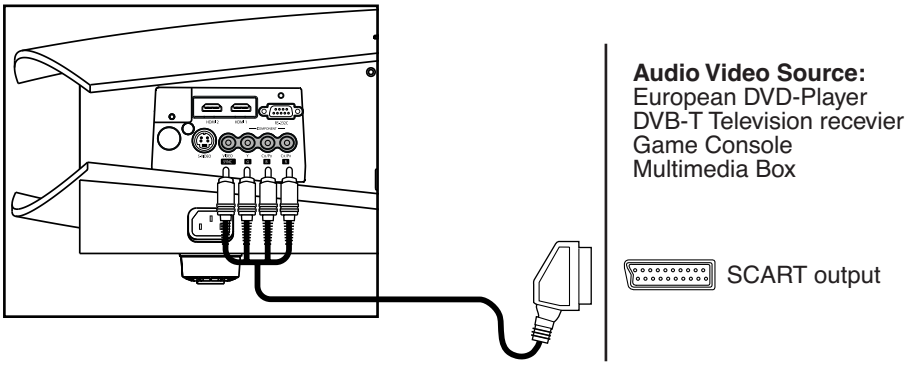

You must configure in the BlackWing Two's Menu the Component Input to 'SCART'. Making so will configure the Video Input as Sync. Input. See "COMP", page 30 for more details.

6.7 Automation and control port: RS-232 Input.

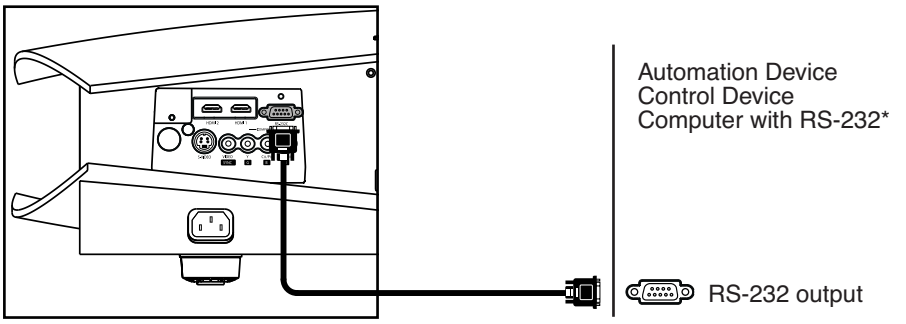

***USING RS-232C WITH A COMPUTER**

The RS-232 Control and Automation may require specific softwares and tools. See "RS-232C input", page 38 for more details on RS-232C cabling and protocol.

7.0 MENU AND PICTURE SETTING

7.1 How to start up the Menu

Box like Menu Structure

The menu structure is built up with boxes which allow easy access to different parameters for setting up the projector. A menu box item can generate an adjustment box on the right of the main menu.

How to activate the Menu Structure

- Press the [MENU] on the RCU or Digital Control Panel located at the rear side of the projector.
- The main menu will be displayed

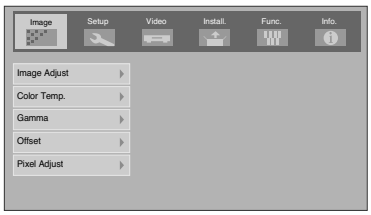

How to select an Item and make an Adjustment

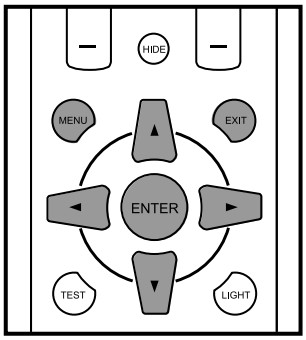

Remote Control Unit

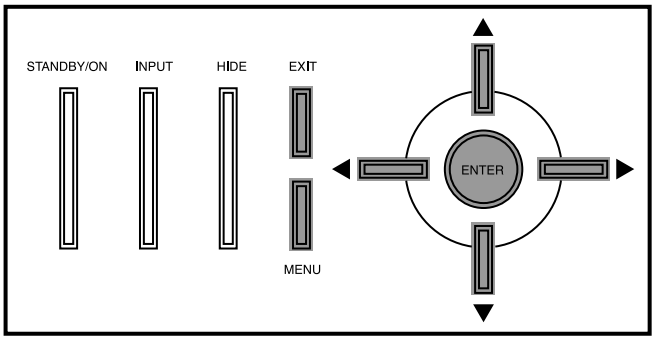

Digital Control Panel

Navigation Keys

- Use the [UP] or [DOWN] keys to highlight the desired Menu
- Press [ENTER] to select
  If the selected item has adjustment values, use the [LEFT] and [RIGHT] to change the value.
  If the selected item has a sub menu, this sub menu will open. (Input Adjust, Offset, etc.)
- Use the [EXIT] key to return to the previous menu, or to clear the menu screen when the main menu is displayed.

7.2 Menu Structure

MAIN MENU	SUBMENU	AVAILABLE OPTIONS	
Image	Image Adjust	Contrast	-30 +30
		Brightness	-30 +30
		Color	-30 +30
		Tint (for NTSC sources)	-30 +30
		Sharpness	-30 +30
		DNR (Digital Noise Reduction)	-30 +30
	Color Temp.	Presets: Low, Middle, High	
		User 1	
		Red	-255 to 0
		Green	-255 to 0
		Blue	-255 to 0
		User 2	
		Red	-255 to 0
		Green	-255 to 0
		Blue	-255 to 0
	Gamma	Normal, A, B, C	
	Offset	Red	-30 +30
		Green	-30 +30
		Blue	-30 +30
	Pixel Adjust	Horiz. Red	1 to 7
		Horiz. Green	1 to 7
		Horiz. Blue	1 to 7
		Vert. Red	1 to 5
		Vert. Green	1 to 5
		Vert. Blue	1 to 5
Setup	Image Profile Parameters: Contrast / Brightness Color / Sharpness DNR / ColorTemp Gamma / Offset	Cinema (Movie quality in dark room) Natural (Picture as is in dark room) Dynamic (Bright scenes or bright room) User1 (User defined) User2 (User defined) User3 (User defined)	
	Profile Memory	Save: User1 User2 User3 Clear User1 User2 User3 Reset (to default settings) Cinema Natural Dynamic	
	Picture Position	Adjust the horizontal and vertical position of the picture on the screen	
	HDMI Input Level (Available for HDMI1 and 2 inputs)	Standard Enhanced (see page 29)	
	Mask (for High Definition picture)	2.5%, 5%, Off	

Video	COMP (for Component Input)	Y PbCb/PrCr RGB SCART
	HDMI (for HDMI 1 and HDMI 2 Inputs)	Auto (Autodetect the HDMI color space) YCbCr (4:4:4) YCbCr (4:2:2) RGB
	Aspect (fixed to 16:9 for HD pictures)	4:3 16:9 Zoom
	Film Mode	Auto Off
	Color System (for Video or S-Video Inputs)	Auto, NTSC, NTSC4.43, PAL, PAL-M, PAL-N, SECAM
	Black Level (for NTSC sources)	0%, 7.5%
Install	Menu Position	Upper Left Upper Center Upper Right Left Center Center Right Center Lower Left Lower Center Lower Right
	Menu Display	15 sec. The menu fade out after 15 sec. On Must press [EXIT] to exit menu
	Line Display (Display the active input when switching input)	5 sec. Off
	Flip H. (for rear projection)	On Off
	Flip V. (for ceiling mounting)	On Off
	High Altitude (>900m above sea level)	On Off
Func.	Back Color (background color when no signal)	Blue Black
	Sleep Timer (The projector goes automatically into Standby Mode when no signal)	15 (in minutes) 30 60 Off
	D-ILA Logo (Logo displayed during startup)	On (D-ILA logo is displayed 5 sec.) Off
	Lamp Power	Normal (170W) High (200W)
	Test Pattern*	6 Test Patterns
	Language	Japanese, English, German, Spanish, Italian, French, Portuguese, Dutch, Swedish, Norwegian, Chinese (Simplified)
Info.	Input	Display selected video Input
	Source	Display the type of the current input video signal
	Lamp Time	Display the accumulated hours usage of the lamp

***TEST PATTERN MENU**

Press the [ENTER] button to switch to the test pattern image. Press the [ENTER] or [TEST] button to alter the test pattern to be projected. Press the [EXIT] button to clear the menu screen.Press the [EXIT] button again to clear the test pattern.

7.3 Image Menu

Contrast

The contrast function is used to adjust the contrast between the light and dark areas of the displayed image. A correct contrast setting is important for good image reproduction. Adjust the Contrast value between -30 and +30.

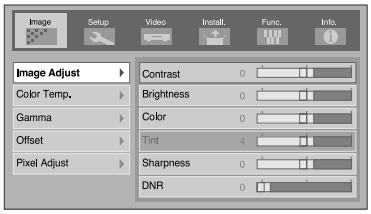

Enter Image Adjust Menu

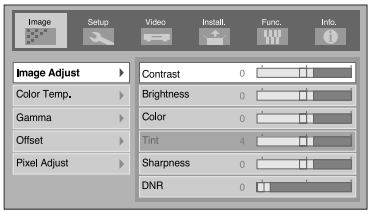

Select Contrast tab

Set a Value between -30 and +30

Brightness

The brightness function is used to adjust the overall light output. Adjust the Brightness value between -30 and +30.

MENU ⇒ Image ⇒ Image Adjust ⇒ Brightness

Color

The Color function (or Saturation) is used to adjust the color saturation levels. Adjust the Color value between -30 and +30.

MENU ⇒ Image ⇒ Image Adjust ⇒ Color

Tint

The Tint function is used to adjust the color hue to obtain true color reproduction and is only active for NTSC sources on Video and S-Video inputs. Adjust the Tint value between -30 (more red) and +30 (more green).

MENU ⇒ Image ⇒ Image Adjust ⇒ Tint

Sharpness

The Sharpness function is used to adjust the image sharpness of the picture. Adjust the Sharpness value between -30 (soft) and +30 (sharp).

MENU ⇒ Image ⇒ Image Adjust ⇒ Sharpness

DNR

The DNR function (Digital Noise Reduction) is used to reduce digital noise on the picture. Adjust the DNR value between 0 (low) and +30 (high).

MENU ⇒ Image ⇒ Image Adjust ⇒ DNR

Color Temp.

Color temperature can be set to Low, Middle, High, User 1 or User 2. (User 1 and 2 allows a fine adjustment of the values for red, green, and blue channels).
Color temperature stands for the spectral properties of a light source. Low color temperature implies warmer (more yellow/red) light while high color temperature implies a colder (more blue) light.

The User settings allow a manual configuration of each primary color Red, Green and Blue from -255 to 0.

Accurate picture calibrations may require professional tools such as dedicated software and colormeter.

Gamma

Gamma is the relationship between the color values of the data and the color values displayed. The Gamma coefficient makes it possible to adjust the brightness of the midtones only without affecting the very bright and very dark areas. If gamma is set too high, middle tones appear too dark. If it's set too low, middle tones appear too light. The Gamma correction factor can be set to Normal, A, B or C.

MENU ⇒ Image ⇒ Gamma

Offset

The Offset function is used to adjust the black level. Adjust the Offset values for each color channel between -30 and +30 (red, blue and green).

MENU ⇒ Image ⇒ Offset ⇒ red / blue / green

Pixel Adjust

The pixel adjust can fine-tune the overall image position and the panel alignments up to +/- 3 pixels horizontally and +/- 2 pixels vertically. Modifying the optical lens shift may require a pixel adjustment.

MENU ⇒ Image ⇒ Pixel Adjust

7.4 Setup Menu

Image Profile

An Image Profile defines a set of values that customize a picture setting. These values are stored into memory in Cinema, Natural Dynamic, User 1, User 2 and User 3 Image Profiles. The following parameters can be adjusted and memorized:

- Contrast
- Brightness
- Color
- Sharpness
- DNR
- Color Temp.
- Gamma
- Offset

See “Custom Image Profile”, page 30 for more details.

Profile Memory

Profile memory menu is used to save, clear or reset an Image Profile stored into memory. See “Custom Image Profile”, page 30 for more details.

Picture Position

Picture Shift setting

When projecting images with black bands at the top and bottom (cinema image), use this to move the image up or down while retaining one of the black bands at the upper or lower end. The default value is 0 (Off) and can be set from -30 Screen Masking

Mask adjustment affects only the edges of the projected image and are used to frame the projected image on to the screen and to hide or black out unwanted information and noise. The masking can be set to 0% (off), 2.5% or 5%).

MENU ⇒ Setup ⇒ Picture Position

HDMI Input Level

The HDMI input level function is used to setup the HDMI 1 and HDMI 2 input terminals. It can be set to:

- Standard, for normal circumstances, typically using a video source with HDMI output.
- Enhanced. select this setting when the black and white of the picture is unclear with RGB video signals from DVI devices.

MENU ⇒ Setup ⇒ HDMI Input Level ⇒ Standard / Enhanced

Mask

The Mask function is used to hide the outer area of the picture. Adjust the Mask value between 0%, 2,5% and 5%.

MENU ⇒ Setup ⇒ Mask ⇒ Off, 2,5% or 5%

7.5 Custom Image Profile

You can adjust the projected image to a desired image quality and save the adjusted values into the Image profile Menu. Besides the default “Cinema”, “Natural” and “Dynamic” settings, there are 3 more types of user-defined settings for image profile.

Parameters stored into an Image Profile

An Image Profile defines a set of values that customize a picture setting. These values can be stored into memory in User 1, User 2 and User 3 Image Profiles. The following parameters can be adjusted and memorized:

- Contrast
- Brightness
- Color
- Sharpness
- DNR
- Color Temp.
- Gamma
- Offset

Setting a new Image Profile

- Select a Preset Image Profile

  MENU ⇒ Setup ⇒ Image Profile ⇒ Cinema

- Go to Image Adjust Menu and modify the Contrast / Brightness / Color / Sharpness / DNR / Color Temp. / Gamma and Offset values to your convenience.

  MENU ⇒ Image ⇒ Image Adjust ⇒ Contrast ⇒ set a value between -30 and +30
  MENU ⇒ Image ⇒ Image Adjust ⇒ Brightness ⇒ set a value between -30 and +30
  MENU ⇒ Image ⇒ Image Adjust ⇒ Color ⇒ set a value between -30 and +30
  MENU ⇒ Image ⇒ Image Adjust ⇒ Sharpness ⇒ set a value between -30 and +30
  MENU ⇒ Image ⇒ Image Adjust ⇒ DNR ⇒ set a value between 0 and +30
  MENU ⇒ Image ⇒ Color Temp. ⇒ set a value between -255 and 0 for each color
  MENU ⇒ Image ⇒ Gamma ⇒ set to Normal / A / B or C
  MENU ⇒ Image ⇒ Offset ⇒ set a value between -30 and +30 for each color

- Save these values into a User Profile, by example User 1:

  MENU ⇒ Setup ⇒ Profile Memory ⇒ Save User 1

- If you want to reset the Preset Image Profiles (Cinema, Natural and Dynamic), you can reset to default values through the Profile Memory Menu.

  MENU ⇒ Profile Memory ⇒ Reset Cinema
  MENU ⇒ Profile Memory ⇒ Reset Natural
  MENU ⇒ Profile Memory ⇒ Reset Dynamic

You can set up to 6 profiles: Cinema, Natural, Dynamic, User 1, User 2 and User 3. The Image Profile can be directly accessed with the Remote Control Unit buttons.

7.6 Video Menu

COMP

The COMP function is used to configure the input signal of the Component Input terminal.

- Y Pb/Cb Pr/Cr to be selected when a component video signal is input.
- RGB to be selected when a RGB video signal is input.
- SCART to be selected when a RGB video signal with Sync signal is input. Typically from a video source equipped with a SCART output. (European market)

HDMI Color Space

The HDMI function is used to define the active color space of the HDMI input.

- Auto, Configure the color space automatically
- YCbCr(4:4:4) for a video source with YCbCr 4:4:4 color encoding.
- YCbCr(4:2:2) for a video source with YCbCr 4:2:2 color encoding.
- RGB for a video source with RGB color encoding.

Aspect

The Aspect function can stretch the picture on the screen.

- 4:3 sets the screen size of the picture into a 4:3 image.
- 16:9 set the screen size of the picture to 16:9
- Zoom enlarge the picture vertically to fill the screen

Film Mode

The Film Mode function can detect the video cadence of film based video. This function can be switch off.

- Auto, for normal circumstances
- Off, switch the Film Mode Off when you are not watching movies shot on film

Color System

The Color System function is available for S-Video and Video inputs. This function is used to configure the color system to be used. Adjust the Color System value to Auto / NTSC / NTSC4,43 / PAL / PAL-M / PAL-N / SECAM.

Black Level

The Black Level function enhances the black level of NTSC sources on S-Video and Video inputs. Adjust its value to 0% or 7,5%.

7.7 Install Menu

Menu Position

Sets the On Screen Menu position.

Menu Display

Sets the duration for displaying the Menu.

- 15 sec.
- On

Line Display

Sets whether to display the input when switching input.

- 5 sec. Displays the selected input during 5 seconds after switching.
- Off, the active input is not displayed.

Flip H.

Set Flip H. On if the unit is used for rear projection.

Flip V.

Set Flip V. On if the unit is installed in ceiling position.

High Altitude

Set High Altitude On when using the unit at low atmospheric pressure, typically higher than 900 meters above sea

level.

7.8 Function Menu

Back Color

Configures the screen color displayed when there is no signal input.

- Blue
- Black

Sleep Timer

The Sleep Timer function is used to automatically switch Off the unit when there is no active video signal. Adjust the value between 15 minutes, 30 minutes, 60 minutes and Off.

D-ILA Logo

This function is used to display the D-ILA logo during the startup or not. Setting this function to On will display for 5 seconds the D-ILA Logo during the startup.

- On
- Off

Lamp Power

The Lamp Power function is used to configure the light output of the lamp.

- Normal, for normal circumstances the lamp is set to 170W.
- High, for bright rooms: sets the lamp to 200W.

Test Pattern

Use the 6 test patterns to adjust the focus, zoom, screen size or position.

NOTICE

The projector internal test patterns are intended to be used only for low level calibration and debugging such as panel alignments, table/ceiling-mounting or troubleshooting. It is recommended to use a video switch with advanced calibration tools to get a perfect calibration on every video source.

Language

Choose the language of the On Screen Display Menu between Japanese, English, German, Spanish, Italian, French, Portuguese, Dutch, Swedish, Norwegian and Chinese (simplified).

7.9 Information Menu

Input

Displays the active video input.

Source

Displays the type of the current input video signal.

Lamp Time

Displays the accumulated hours of usage of the lamp.

8.0 MAINTENANCE

8.1 Clean Dirt on the Cabinet

Always use a soft cloth. In case of heavy soiling, soak a cloth in neutral detergent diluted with water, wring dry and wipe, followed by wiping again using a dry cloth.

Caution

Pay attention to the following as the cabinet may deteriorate in condition, get damaged or paint may come off.

- Do not wipe with a stiff cloth.
- Do not wipe with force.
- Do not wipe with thinner or benzene.
- Do not spray volatile chemicals like insecticide.
- Do not allow prolonged contact with rubber or plastic products.

8.2 Dirt on the Lens

The lens shall be cleaned using commercial blowers or lens cleaning papers (for cleaning glasses and cameras). Do not use fluid-type cleaning agents. This may lead to peeling of the surface coating film. The lens surface is fragile. Avoid rubbing it hard or knocking.

8.3 Replacing the Lamp

Light-source Lamp and Lamp Usage Time

The life of light-source lamps used for this unit is about 2000 hours.

- The lamp life of 2000 hours is merely the average life span of light-source lamps and we do not provide any guarantee for this figure. The lamp life may not reach 2000 hours depending on the operating conditions.
  Deterioration progresses rapidly when the remaining lamp usage time is short. Get ready or replace with a new lamp when the accumulated usage time exceeds 1900 hours. Depending on the operating conditions, the lamp may have to be exchanged earlier.
  If the image is dark or color tone abnormal, replace the lamp as soon as possible.
- You can also check the accumulated hours of usage. Please refer to Lamp Time of the Information menu.
- Setting Power Save of the Options menu to On does not affect the usage time of the light-source lamp.

Please consult your authorized dealer when purchasing a new lamp unit.

When the lamp usage time exceeds 1900 hours (but less than 2000 hours

The [LAMP] indicator lights On orange and the Lamp replacement message will be displayed on the screen when projection starts.

- The message can be cleared by pressing any button on the remote control or this unit.

When the lamp usage time exceeds 2000 hours

The [LAMP] indicator lights On orange and the Lamp replacement message will be displayed on the screen when projection starts and the Warning mark will appear blinking.

- Press the [EXIT] button to clear the display. However, the same Warning and Lamp replacement messages will be displayed after 1 hour.
- When the unit is switched to the standby mode or turned off after the lamp usage time exceeds 2000 hours, it cannot be switched back to the projection mode again. In this case, replace with a new lamp and reset the lamp time.
- The projection mode (operating mode) cannot be restored until a new lamp is replaced and the lamp time reset.

ABOUT LAMP REPLACEMENT

If this unit is installed in a constricted place, attempting to replace the lamp in that place may cause injury. Move this unit to a place large enough to perform work.
Use only genuine replacement parts for the lamp unit. Otherwise, malfunction may occur. Also, never attempt to re-use an old lamp unit. This may cause marked performance deterioration or lamp blowout, thus leading to unit malfunction. Broken pieces of the lamp outside this unit may also cause injuries during lamp unit exchange.
Do not replace the lamp immediately after this unit has been used. The temperature of the lamp is still high and this may cause a burn. Allow a cooling period of 1 hour or more before replacement.
Before replacing the lamp unit, pull out the power plug from the outlet while the [STANDBY/ON] indicator is still light red. Replacing a lamp with the plug connected to the outlet may cause injuries or electric shocks.

Procedure for Lamp Replacement

During the lamp replacement process, you may have access to sensitive parts of the projector.

- Open the lamp Cover, on the side of the projector.
- Loosen the 2 screws on the lamp unit and lift up the handle.
- Pull out the lamp unit.
- Insert the new lamp unit until it is fully in.
- Tighten the screws of the lamp unit and close the handle.
- Attach the lamp cover and fasten the screw.

Resetting Lamp Time

After installing a new lamp, reset the lamp time. The lamp time counter will be reset and a new count will start. If the accumulated lamp time has reached 2000 hours, this unit will not work (lamp does not light up) unless the lamp time is reset.

a) Insert plug into the power outlet

The main power turns on and the [STANDBY/ON] indicator on the unit lights up.

b) Press the [EXIT], [ENTER] and [HIDE] buttons sequentially, then press the [DOWN] button for 2 seconds or more.

- The [STANDBY/ON] indicator will alternately blink for a duration of about 3 seconds each. After blinking stops, lamp time resets and the unit returns to the standby mode ([STANDBY/ON] indicator lights up red).

TO ENSURE THE LAMP TIME HAS BEEN RESET

The lamp time can be checked via the Lamp Time item of the Information menu.

CAUTION DURING RESET WORK

Reset the lamp time only when you have replaced the lamp.
Never reset it when the lamp is still in use.
Otherwise, the approximate standard for gauging replacement time may be inaccurate, lamp performance may deteriorate and lamp blowout may occur.

8.4 Cleaning and Replacing the Dust Filter

The filter must be cleaned regularly to allow an efficient air intake. If the filter is extremely dirty and cannot be cleaned, or if it is damaged, replace the filter with a new one. Otherwise, dirt may enter the unit and appear on the screen, preventing you from enjoying the video fully. If dirt has entered the unit or if you need information about the filter, please consult your authorized dealer.

Pull out the plug from the power outlet

Pull out the power plug from the outlet while the [STANDBY/ON] indicator is still on.

Remove the inner filter

Push up and lift the claw at the base of the inner filter, followed by drawing out the filter.

Clean the filter

Clean the filter with water and dry it, avoiding direct sunlight. In extremely soiled cases, use of a neutral detergent is recommended.

Reinstall the inner filter

Check that the 2 claws at the left and right of the inner filter are locked to this unit.

8.5 Troubleshooting

On Screen Warnings

MESSAGE	CAUSE DETAIL
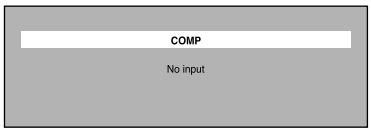	No device is connected to the Input terminal. The terminal is connected but there is no signal. Input a video signal.
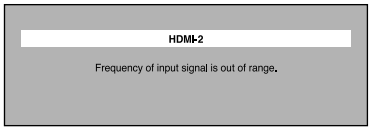	A video signal that cannot be used with this unit has been input. Input a compatible video signal.
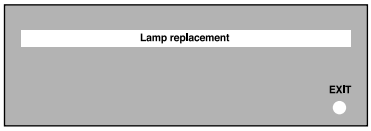	The message is displayed when the accumulated lamp time reaches 1900 hours. The message can be cleared by pressing the [EXIT] button. Get ready a new lamp in advance or replace as soon as possible.
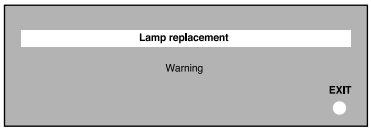	The message will be displayed with the Warning word when the accumulated lamp time exceeds 2000 hours. The message can be cleared by pressing the [EXIT] button. Install a new lamp and reset the lamp time. see “Procedure for Lamp Replacement”, page 34.

LED Warning

If abnormality occurs in this unit during projection, the warning LED will light On, and the type of abnormality will be indicated by a combination of indicators at the rear of this unit.

When the unit enters in Warning Mode, it will automatically stop projection and run the cooling fan for about 60 seconds.

No.	OPERATING LED			SIGNIFICATION
	STANDBY/ON	LAMP	WARNING	
1	-	Light On	-	Lamp time exceeds 1900 hours.
2	-	Light On	-	Lamp time exceeds 2000 hours and need replacement.
3	-	Blinking	Light On	Lamp error during startup.
4	-	Blinking	Light On	Lamp error during projection.
5	-	-	Light On	Microprocessor circuit error.
6	-	-	Light On	Drive circuit error.
7	-	Blinking	Light On	Lamp cover is removed.
8	-	-	Light On	Internal temperature is too high.
9	-	-	Light On	External temperature is too high.
10	-	-	Light On	Cooling Fan speed error.

Actions to be taken upon warning indications

No.	SIGNIFICATION	ACTIONS TO BE TAKEN
1	Lamp time exceeds 1900 hours.	Get prepared a new lamp for replacement.
2	Lamp time exceeds 2000 hours and need replacement.	Replace the lamp with a new one, see “Procedure for Lamp Replacement”, page 34.
3	Lamp error during startup.	Turn ON the power again.
4	Lamp error during projection.	Check that an impact shock has not occurred during projection, then turn ON again.
5	Microprocessor circuit error.	Turn ON the power again.
6	Drive circuit error.	Turn ON the power again.
7	Lamp cover is removed.	Check that the lamp unit and lamp cover are correctly installed and turn ON the power.
8	Internal temperature is too high.	Check that nothing is blocking the air inlets and leave the unit until it cool down. Then turn ON the power.
9	External temperature is too high.	Check that the external temperature is normal and leave the unit until it cools down. After that, turn ON the power again.
10	Cooling Fan speed error.	Leave the unit until it cools down, then turn ON the power again.

Before sending the projector to repair

Symptom	Probable Cause	Corrective Action
Power is not supplied	Is the power cord disconnected?	Insert the power cord, see page 18.
	Is the lamp cover properly shut?	Remove the plug when the [STANDBY/ON] LED is light On red. Close the lamp cover properly and insert the plug again.
	Has the lamp life expired (has the lamp usage time reached 2000 hours)?	Remove the plug when the [STANDBY/ON] indicator is light On red. Install a new lamp. Upon doing so, insert the plug. Reset the lamp time after installing a new lamp.
Projected image is too dark	Is the lamp near exhaustion?	Check the lamp usage time on the Information Menu. Prepare a new lamp or replace as soon as possible when the lamp is near exhaustion.
	Have the Picture settings been modified?	Reset the current Image Profile settings to default values. See “Custom Image Profile”, page 30 for details.
Unit works but stops abruptly after a few minutes	Are the air suction openings (air inlets) and exhaust vents blocked?	Remove the plug when the [STANDBY/ON] indicator is light On red. Remove any blocking object that could prevent the normal air flow. See “Air-Flow and Space Requirements”, page 11.
	Are the filters dirty?	Clean the filters.
No Picture on the screen	Are the video devices properly connected?	Connect the devices correctly.
	Is the lens cap removed?	Remove the lens cap.
	Is the video image temporarily turned off when the [HIDE] button is being pressed?	Press the [HIDE] button to display the video image again.
Video image is fuzzy.	Is the focus correctly adjusted?	Adjust accordingly using the focus button.
	Is the unit placed too near or too far away from the screen?	Set the unit at a correct distance from the screen.
Video images are missing	Has setting been performed for screen mask?	Set the Mask setting of the Setup menu to Off.
	Has setting been performed for picture shift?	Check in the Setup Menu that the picture position is correctly set and that there is no picture portion missing.
Remote control unit does not work	Are batteries installed correctly?	Match the polarities (+ or -) correctly when inserting the batteries.
	Are batteries exhausted?	Replace with new batteries.
	Is there an obstructive object between the remote control unit and remote sensor?	Remove any obstructive objects.
	Is the remote control held too far away from the sensor?	Hold the remote control closer to the sensor when using.

This unit uses a microcomputer. External noise may cause it to malfunction. If this happens, turn off the power and remove the plug from the power outlet. Insert plug again into the outlet and check operation of the unit.

9.0 MISCELLANEOUS

9.1 RS-232C input

Pin Assignment

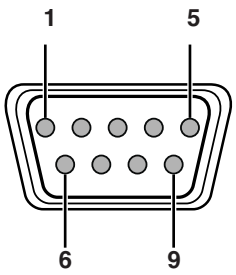

Pin No.	Signal Name	Pin No.	Signal Name
1	N/C	6	N/C
2	RD	7	N/C
3	TD	8	N/C
4	N/C	9	N/C
5	GND		

External Control

Control of this unit is possible via a computer by connecting this unit to an automation device or computer with a RS-232C cross cable (D-sub 9 pins). The commands to control this unit and the response data format against the received commands are explained here.

Communication Specifications

Communication specifications for this unit are as follows:

Baud Rate	19200 bps
Data Format	Binary
Character Length	8 bits
Parity	None
Start Bit	1 bit
Stop Bit	1 bit
Flow Control	None

Command Format

When sending a command to this unit, use the following data format:

Header	Proj. ID	Command	[Com. Parameters]	LF
1 byte	2 bytes	2 bytes	Variable length: 0, 1 or 4 bytes	1 byte

Header	: Designates the Command type. 2 possible headers:
	! (21h): Assigns command to the projector (Command)
	? (3Fh): Query data from the projector (Asking command)
Proj. ID	: Designates the Projector Identification. Fixed to 89h 01h.
Command	: Designates command.
Com. Parameters	: Designates the command parameters. Variable length from 0 to 4 bytes
LF	: Designates the end of the data. Fixed to Line Feed (0Ah)

*[ ] is not necessary

Response data format

Upon receiving a valid control command, the unit sends back the following response data to the computer to

confirm the command: this command is sent to the computer.

Header	Proj. ID	Command Received	Data	LF
1 byte	2 bytes	2 bytes	0 or 1 byte	1 byte

Header	: Designates the header of the projector answer, 2 possible headers:
	Ack (06h): Acknowledgement of valid Command
	@ (40h): Response to a Query data from projector (Asking command)
Proj. ID	: Designates the Projector Identification. Fixed to 89h 01h
Command Received	: Copy the command received (should be the same as the command sent)
Data	: Available only if the command received is a Asking Command.
LF	: Designates the end of the data. Fixed to Line Feed (0Ah)

Available Commands and Parameters

a) Commands

Command Header (21h)	ASCII code	Parameters	Description
Connection Check	00h 00h	none	Checks whether communication between the projector and the computer is working
Power ON/OFF	50h 57h	31h	If the projector is in standby mode, this command switch this unit ON.
		30h	If the projector is powered ON, this command switch this unit into Standby Mode.
Switch Input	49h 50h	30h	Switch active input to S-Video
		31h	Switch active input to Video
		32h	Switch active input to Comp.
		36h	Switch active input to HDMI 1
		37h	Switch active input to HDMI 2
Emulate RCU	52h 43h	xxh xxh xxh xxh	The command sent is executed as a Remote Control Unit command. (See below the RCU Command list and Parameters)

b) Emulate Remote Control Unit Commands (4 bytes)

To emulate a command sent by the RCU, you should send the following command:
Header: 21h Proj. ID: 89h 01h Command: 52h 43h Parameters: 4 bytes

Choose the correct Parameters listed below according to the command

Remote Control Button name	Parameters / ASCII IR codes
Up button	37h 33h 30h 31h
Down button	37h 33h 30h 32h
EXIT	37h 33h 30h 33h
Operate ON	37h 33h 30h 35h
Operate Off	37h 33h 30h 36h
HIDE	37h 33h 31h 44h
MENU	37h 33h 32h 45h
ENTER	37h 33h 32h 46h
Right button	37h 33h 33h 34h
Left button	37h 33h 33h 36h
VIDEO	37h 33h 34h 42h
S-VIDEO	37h 33h 34h 43h

COMP.	37h 33h 34h 44h
TEST	37h 33h 35h 39h
Cinema	37h 33h 36h 39h
Natural	37h 33h 36h 41h
Dynamic	37h 33h 36h 42h
User 1	37h 33h 36h 43h
User 2	37h 33h 36h 44h
User 3	37h 33h 36h 45h
HDMI 1	37h 33h 37h 30h
HDMI 2	37h 33h 37h 31h
INFO	37h 33h 37h 34h
GAMMA	37h 33h 37h 35h
Color Temp.	37h 33h 37h 36h
Aspect	37h 33h 37h 37h
Contrast (+)	37h 33h 37h 38h
Contrast (-)	37h 33h 37h 39h
Brightness (+)	37h 33h 37h 41h
Brightness (-)	37h 33h 37h 42h
Color (+)	37h 33h 37h 43h
Color (-)	37h 33h 37h 44h
Sharp (+)	37h 33h 37h 45h
Sharp (-)	37h 33h 37h 46h

Example:

To emulate Brightness (+), send the command: 21h 89h 01h 52h 43h 37h 33h 37h 41h 0Ah

c) Asking Commands and Data sent by the projector

Asking Command Header (3Fh)	ASCII code	Data sent to PC	Description
Power state	50h 57h	30h	The projector indicates that it is in Standby Mode.
		31h	The projector indicates that it is in Power ON Mode.
		32h	The projector indicates that it is in Cool Down Mode.
		34h	The projector indicates that it is in Warning Mode.
Active Input	49h 50h	30h	Indicates that the S-Video Input is the Active Input
		31h	Indicates that the Video Input is the Active Input
		32h	Indicates that the Comp. Input is the Active Input
		36h	Indicates that the HDMI 1 Input is the Active Input
		37h	Indicates that the HDMI 2 Input is the Active Input

d) Examples

You want to...	Command (PC -> Projector)	Response Data (Projector -> PC)
Check the connection between the projector and the computer	21h 89h 01h 00h 00h 0Ah	ACK: 06h 89h 01h 00h 00h 0Ah
Switch the projector ON	21h 89h 01h 50h 57h 31h 0Ah	ACK: 06h 89h 01h 50h 57h 0Ah
Switch the projector OFF	21h 89h 01h 50h 57h 30h 0Ah	ACK: 06h 89h 01h 50h 57h 0Ah
Switch the projector OFF with OSD confirmation (Emulate RCU)	21h 89h 01h 52h 43h 37h 33h 30h 36h 0Ah	ACK: 06h 89h 01h 52h 43h 0Ah
Change Active Input to Comp.	21h 89h 01h 49h 50h 32h 0Ah	ACK: 06h 89h 01h 49h 50h 0Ah
Display On Screen Menu (Emulate RCU)	21h 89h 01h 52h 43h 37h 33h 32h 45h 0Ah	ACK: 06h 89h 01h 52h 43h 0Ah
Ask the projector its power state The projector being powered ON	3Fh 89h 01h 50h 57h 0Ah	ACK: 06h 89h 01h 50h 57h 0Ah Rsp : 40h 89h 01h 50h 57h 31h 0Ah
Ask the projector its Active Input S-Video being active	3Fh 89h 01h 49h 50h 0Ah	ACK: 06h 89h 01h 49h 50h 0Ah Rsp : 40h 89h 01h 49h 50h 30h 0Ah

9.2 Specifications

Overview

The BlackWing Two uses the latest technology developed for professional projectors. The D-ILA is the abbreviation for Direct drive Image Light Amplifier. D-ILA devices are manufactured using extremely high-precision technology.

Emission Method		D-ILA (Reflective Active Matrix Principle)
Display Panel/Size		0.7" D-ILA 4 ms True Motion panel
Native Resolution		3x 1920 x 1080 pixels
Native Contrast Ratio		20,000:1
Projection Lens		Throw Ratio 1.4:1 - 2.8:1 2.0x Lens: manual zoom and focus
Brightness		1000 ANSI Lumens
Light-source Lamp		200 W Ultra-high pressure mercury lamp (Ref. No. Rxxx ref lamp)
Screen Size		50" to 250" (Aspect ratio 16:9)
Distance range		from1,52 m to 12 m
Input Signals		
	Video Input	NTSC, PAL, SECAM
	S-Video Input	NTSC, PAL, SECAM
	Component Input	(YPbPr, RGB and RGsB) 480i/p, 576i/p, 720p50/60, 1080i50/60
	HDMI 1 Input	480i/p, 576i/p, 720p50/60, 1080i50/60, 1080p24/50/60
	HDMI 2 Input	480i/p, 576i/p, 720p50/60, 1080i50/60, 1080p24/50/60
Color System		NTSC, NTSC4.43, PAL, PAL-N, PAL-M, SECAM
Input Sync Frequency		
	Analog Inputs	74.5 Mhz
	Digital Inputs	148,5 Mhz
Power Requirements		AC 100 V - 240 V AC, 50 Hz/60 Hz
Power Consumption		280W (2.7W in standby mode)
Operation Environment		Temperature: +5°C to +35°C Storage Temperature: -10°C to +60°C Humidity: 20 % to 80 % (No condensation)
Dimensions (Width x Height x Depth)		585 x 175 x 505 mm - 23.0" x 6.9" x 19.9" (Excluding lens and protrusion portion)
Net Weight		11,0 Kg - 24.5 lbs

- Design and specifications are subject to change without prior notice.
- Please note that some of the pictures and illustrations may have been abridged, enlarged or contextualized in order to aid comprehension. Images may differ from the actual product.

D-ILA

D-ILA is the abbreviation for Direct drive Image Light Amplifier. D-ILA devices are the newest display technology for projection devices, based on reflective L-COS technology. The manufacturing process features a pixel effectiveness of 99,99% and the fill factor obtained is above 93%.

Dimensions

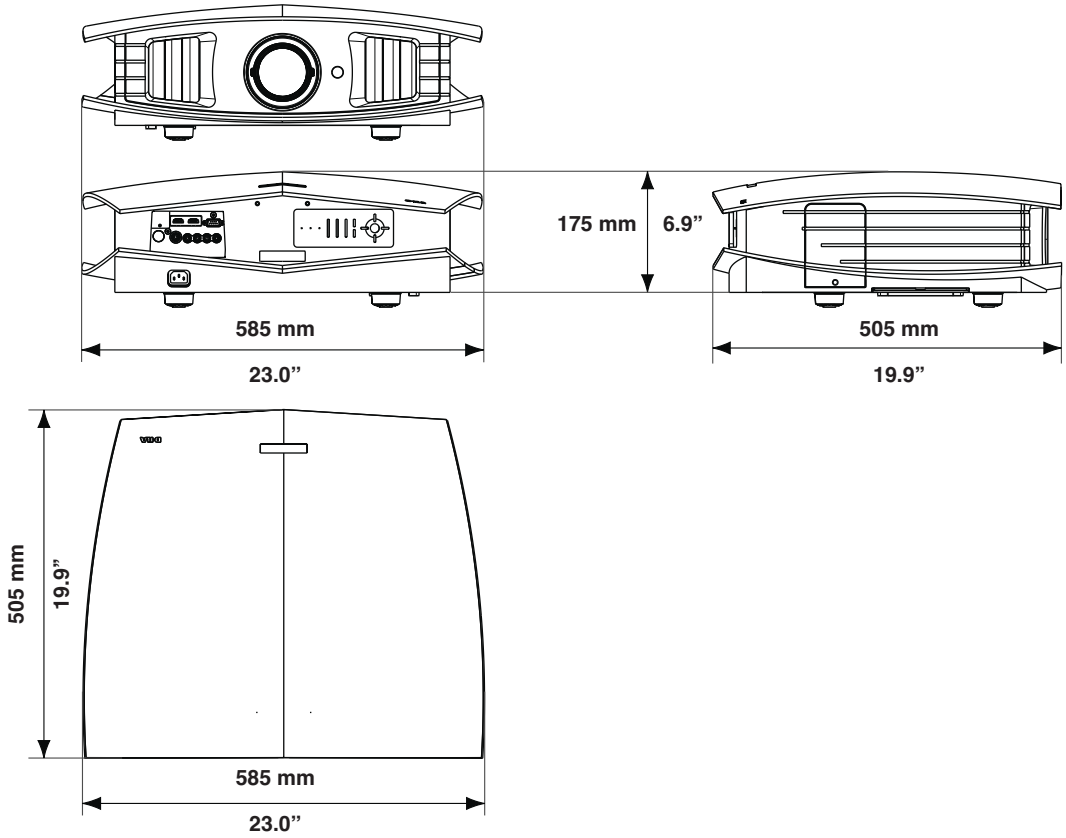

Contact Information:

TEC - CineVERSUM
7, rue La CAILLE, 75017 Paris - FRANCE
Phone: +33 1 42 29 44 44, Fax: +33 1 42 29 09 10
e-mail : info@cineversum.com, Web: www.cineversum.com

R599740 - BlackWing Two User Manual

Cine VERSUM