USA's primary source for projector lamps
myprojectorlamps

PROJECTOR OWNER'S MANUAL

# Barco

## CINEVERSUM BLACKWING FOUR

**Need a replacement lamp for this projector?**

**www.myprojectorlamps.com**

Original manufacturer manual, provided unmodified as a courtesy of MyProjectorLamps.com.
All trademarks belong to their respective owners.

# BLACK WING Four

User manual

R599782

Cine VERSUM

## Changes

Cineversum provides this manual 'as is' without warranty of any kind, either expressed or implied, including but not limited to the implied warranties or merchantability and fitness for a particular purpose. Cineversum may make improvements and/or changes to the product(s) and/or the program(s) described in this publication at any time without notice.
This publication could contain technical inaccuracies or typographical errors. Changes are periodically made to the information in this publication; these changes are incorporated in new editions of this publication.

## Copyright

All right reserved. No part of this document may be copied, reproduced or translated. It shall not otherwise be recorded, transmitted or stored in a retrieval system without the prior written consent of Cineversum.

## Guarantee

Cineversum provides a guarantee relating to perfect manufacturing as part of the legally stipulated terms of guarantee. On receipt, the purchaser must immediately inspect all delivered goods for damage incurred during transport, as well as for material and manufacturing faults. Cineversum must be informed immediately in writing of any complaints.
If the purchaser or third party caries out modifications or repairs on goods delivered by Cineversum, or if the goods are handle incorrectly, in particular if the systems are commissioned operated incorrectly or if, after the transfer of risks, the goods are subject to influences not agreed upon in the contract, all guarantee claims of the purchaser will be rendered invalid. Not included in the guarantee coverage are system failures which are attributed to programs or special electronic circuitry provided by the purchaser, e.g. interfaces. Normal wear as well as normal maintenance are not subject to the guarantee provided by Cineversum either.
The environmental conditions as well as the servicing and maintenance regulations specified in this manual must be complied with by the customer.

## Trademarks

Brand and product names mentioned in this manual may be trademarks, registered trademarks or copyrights of their respective holders. All brands and product names mentioned in this manual serve as comments or examples and are not to be understood as advertising for the products of their manufactures.

# TABLE OF CONTENTS


**1.0 SAFETY INSTRUCTIONS ..... 5**
1.1 Important information ..... 5
Lead-free regulation ..... 5
Information for Users on Disposal of Old Equipment ..... 5
About the installation place ..... 5
1.2 Important safeguards ..... 5
1.3 REGIONAL SPECIFIC INFORMATION ..... 7
FCC INFORMATION (USA ONLY) ..... 7

**2.0 INSTALLATION GUIDELINES ..... 8**
2.1 Environment of Use ..... 8
Mounting this unit to the ceiling ..... 8
Precautions of Usage ..... 8
2.2 Air-Flow and Space Requirements ..... 8
2.3 Ceiling mounting the unit ..... 9
Precautions for Ceiling-mount ..... 9
2.4 Projection Distance and Offset Setting ..... 10
Projection Distance ..... 10
Projector position : setting the correct lens shift ..... 10
Adjust the picture Focus ..... 12
Adjust the picture Zoom ..... 12

**3.0 REMOTE CONTROL UNIT (RCU) ..... 13**
3.1 General view ..... 13
3.2 Loading and replacing batteries ..... 13
3.3 How to use the remote control unit ..... 14

**4.0 GETTING STARTED ..... 15**
4.1 General View ..... 15
Front side ..... 15
Rear side ..... 15
Input Panel side ..... 15
4.2 Connecting the Power Cord ..... 16
4.3 Operating LEDs ..... 17
4.4 Operating and Navigation Buttons ..... 18

**5.0 CONNECTIONS ..... 18**
5.1 Connecting a device to the projector ..... 19
5.2 Connecting a SCART device ..... 20
5.3 Caution when connecting a device ..... 20

**6.0 MENU AND PICTURE SETTING ..... 21**
6.1 Menu Structure ..... 21
6.2 Picture Adjust menu ..... 24
Picture Mode ..... 24
Contrast ..... 24
Brightness ..... 24
Color ..... 24
Tint ..... 24
Color Temperature ..... 24
Gamma ..... 24
Advanced ..... 25
Lens Aperture ..... 25
Reset ..... 25
6.3 Input Signal menu ..... 26
HDMI Inputs ..... 26
Component ..... 26
Video / S-Video ..... 26
PC ..... 26

Picture Position ..... 26
Aspect Ratio ..... 26
V-Stretch (for Video sources) ..... 27
Over Scan (only SD) and Mask (only HD) ..... 28
Film Mode (only 480i, 576i, 1080i) ..... 28
6.4 Installation Menu ..... 28
Lens Control ..... 28
Pixel Adjust ..... 28
Installation Style ..... 29
Keystone ..... 29
Screen Adjust ..... 29
6.5 Display Setup Menu ..... 29
Back Color ..... 29
Menu Position ..... 29
Menu Display ..... 29
Line Display ..... 29
Source Display ..... 29
Logo ..... 29
Language ..... 29
6.6 Function Menu ..... 29
Lamp Power ..... 29
Test Pattern ..... 30
Off-Timer ..... 30
High Altitude Mode ..... 30
6.7 Information Menu ..... 30
Input Source ..... 30
Source ..... 30
Resolution ..... 30
H. Frequency ..... 30
V. Frequency ..... 30
Deep Color ..... 30
Lamp Time ..... 30
6.8 Expert Calibration ..... 30

**7.0 ANAMORPHIC LENS ..... 31**
7.1 Optional 2.35 CineMax and 2.35 THEATRE Concept ..... 31
7.2 Using the Remote Control Unit. ..... 31
7.3 2.35 CineMax and 2.35 CineMax PRO options ..... 32
7.4 2.35 THEATER Concept ..... 32

**8.0 MAINTENANCE ..... 34**
8.1 Clean Dirt on the Cabinet ..... 34
8.2 Dirt on the Lens ..... 34
8.3 Replacing the Lamp ..... 34
Light-source Lamp and Lamp Usage Time ..... 34
Procedure for Lamp Replacement ..... 34
Resetting Lamp Time ..... 35
8.4 Cleaning and Replacing the Dust Filters ..... 35
8.5 Troubleshooting ..... 35

**9.0 MISCELLANEOUS ..... 37**
9.1 RS-232 input and IR Codes ..... 37
9.2 PC compatible signals ..... 41
9.3 Specifications ..... 43

# 1.0 SAFETY INSTRUCTIONS

## 1.1 Important information

### Lead-free regulation

This product has a High Intensity Discharge (HID) lamp that contains a small amount of mercury. It also contains lead in some components.
Disposal of these materials may be regulated in your community due to environmental considerations. For disposal or recycling information please contact your local authorities, or the Electronics Industries Alliance: http://www.eiae.org.

### Information for Users on Disposal of Old Equipment

This symbol indicates that the electrical and electronic equipment should not be disposed as general household waste at its end of life. Instead, the product should be handed over to the applicable collection point for the recycling of electrical and electronic equipment for proper treatment, recovery and recycling in accordance with your national legislation.
By disposing of this product correctly, you will help to conserve natural resources and will help prevent potential negative effects on the environment and human health which could otherwise be caused by inappropriate waste handling of this product.
For more information about collection point and recycling of this product, please contact your local municipal office, your household waste disposal service or the shop where you purchased the product. Penalties may be applicable for incorrect disposal of this waste, in accordance with national legislation.

**Other Countries outside the European Union:**

If you wish to dispose of this product, please do so in accordance with applicable national legislation or other rules in your country for the treatment of old electrical and electronic equipment.

### About the installation place

Do not install the projector in a place that cannot support its weight securely.
If the installation place is not sturdy enough, the projector could fall or overturn, possibly causing personal injury.

**CAUTION:**
To reduce the risk of electric shock, do not remove cover. Refer servicing to qualified service personnel. This projector is equipped with a 3-blade grounding type plug to satisfy FCC rule. If you are unable to insert the plug into the outlet, contact your electrician.

**WARNING:**
To prevent fire or shock hazards, do not expose this appliance to rain or moisture. This apparatus must be earthed.

## 1.2 Important safeguards

Electrical energy can perform many useful functions. This unit has been engineered and manufactured to assure your personal safety. **But IMPROPER USE CAN RESULT IN POTENTIAL ELECTRICAL SHOCK OR FIRE HAZARD.** In order not to defeat the safeguards incorporated into this product, observe the following basic rules for its installation, use and service.

The power input is auto-ranging from 100 to 240 VAC.

Please read these Important Safeguards carefully before use.

- All the safety and operating instructions should be read before the product is operated.
- All warnings on the product and in the operating instructions should be adhered to.
- All operating instructions should be followed.
- Place the projector near a wall outlet where the plug can be easily unplugged.
- Unplug this product from the wall outlet before cleaning. Do not use liquid cleaners or aerosol cleaners. Use a damp cloth for cleaning.
- Do not use attachments not recommended by the product manufacturer as they may be hazardous.
- Do not use this product near water. Do not use immediately after moving from a low temperature to high

temperature, as this causes condensation, which may result in fire, electric shock, or other hazards.

- Do not place this product on an unstable cart, stand, or table. The product may fall, causing serious injury to a child or adult, and serious damage to the product. The product should be mounted according to the manufacturer's instructions, and should use a mount recommended by the manufacturer.
- When the product is used on a cart, care should be taken to avoid quick stops, excessive force, and uneven surfaces which may cause the product and cart to overturn, damaging equipment or causing possible injury to the operator.
- Slots and openings in the cabinet are provided for ventilation. These ensure reliable operation of the product and protect it from overheating. These openings must not be blocked or covered. (The openings should never be blocked by placing the product on bed, sofa, rug, or similar surface. It should not be placed in a built-in installation such as a bookcase or rack unless proper ventilation is provided and the manufacturer's instructions have been adhered to). For proper ventilation, separate the product from other equipment, which may prevent ventilation and keep a distance of more than 5-9" (150 mm).
- This product should be operated only with the type of power source indicated on the label. If you are not sure of the type of power supply to your home, consult your product dealer or local power company.
- This product is equipped with a three-wire plug. This plug will fit only into a grounded power outlet. If you are unable to insert the plug into the outlet, contact your electrician to install the proper outlet. Do not defeat the safety purpose of the grounded plug.
- Power-supply cords should be routed so that they are not likely to be walked on or pinched by items placed upon or against them. Pay particular attention to cords at doors, plugs, receptacles, and the point where they exit from the product.
- For added protection of this product during a lightning storm, or when it is left unattended and unused for long periods of time, unplug it from the wall outlet and disconnect the cable system. This will prevent damage to the product due to lightning and power line surges.
- Do not overload wall outlets, extension cords, or convenience receptacles on other equipment as this can result in a risk of fire or electric shock.
- Never push objects of any kind into this product through openings as they may touch dangerous voltage points or short out parts that could result in a fire or electric shock. Never spill liquid of any kind on the product.
- Do not attempt to service this product yourself as opening or removing covers may expose you to dangerous voltages and other hazards. Refer all service to qualified service personnel.
- Unplug this product from the wall outlet and refer service to qualified service personnel under the following conditions:

a) When the power supply cord or plug is damaged.

b) If liquid has been spilled, or objects have fallen on the product.

c) If the product has been exposed to rain or water.

d) If the product does not operate normally by following the operating instructions. Adjust only those controls that are covered by the Operation Manual, as an improper adjustment of controls may result in damage and will often require extensive work by a qualified technician to restore the product to normal operation.

e) If the product has been dropped or damaged in any way.

f) When the product exhibits a distinct change in performance - this indicates a need for service.

- When replacement parts are required, be sure the service technician has used replacement parts specified by the manufacturer or with same characteristics as the original part. Unauthorized substitutions may result in fire, electric shock, or other hazards.
- Upon completion of any service or repairs to this product, ask the service technician to perform safety checks to determine that the product is in proper operating condition.
- The product should be placed more than one foot away from heat sources such as radiators, heat registers, stoves, and other products (including amplifiers) that produce heat.
- When connecting other products such as VCR's, and personal computers, you should turn off the power of this product for protection against electric shock.
- Do not place combustible behind the cooling fan. For example, cloth, paper, matches, aerosol cans or gas lighters that present special hazards when over heated.
- Do not look into the projection lens while the illumination lamp is turned on. Exposure of your eyes to the strong light can result in impaired eyesight.
- Do not look into the inside of this unit through vents (ventilation holes), etc. Do not look at the illumination lamp directly by opening the cabinet while the illumination lamp is turned on. The illumination lamp also contains ultraviolet rays and the light is so powerful that your eyesight can be impaired.
- Do not drop, hit, or damage the light-source lamp (lamp unit) in any way. It may cause the light-source lamp to break and lead to injuries. Do not use a damaged light source lamp. If the light-source lamp is broken, ask your dealer to repair

it. Fragments from a broken light-source lamp may cause injuries.

- The light-source lamp used in this projector is a high pressure mercury lamp. Be careful when disposing of the light source lamp. If anything is unclear, please consult your dealer.
- Do not ceiling-mount the projector to a place which tends to vibrate; otherwise, the attaching fixture of the projector could be broken by the vibration, possibly causing it to fall or overturn, which could lead to personal injury.
- Use only the accessory cord designed for this product to prevent shock.
- The power supply voltage rating of this product is AC120 V, AC100 V – AC240 V, the power cord attached conforms to the following power supply voltage. Use only the power cord designated by our dealer to ensure Safety and EMC.
- When it is used by other power supply voltage, power cable must be changed.
- Ensure that the power cable used for the projector is the correct type for the AC outlet in your country. Consult your product dealer.
- **Caution:** Do not allow any unqualified person to install the unit. Be sure to ask your dealer to install the unit (e.g. attaching it to the ceiling) since special technical knowledge and skills are required for installation. If installation is performed by an unqualified person, it may cause personal injury or electrical shock.

## 1.3 REGIONAL SPECIFIC INFORMATION

### FCC INFORMATION (USA ONLY)

Changes or modification not approved by Cineversum could void the user's authority to operate the equipment.
Note: This equipment has been tested and found to comply with the limits for Class B digital devices, pursuant to Part 15 of the FCC Rules. These limits are designed to provide reasonable protection against harmful interference in a residential installation. This equipment generates, uses, and can radiate radio frequency energy and, if not installed and used in accordance with the instructions, may cause harmful interference to radio communications. However, there is no guarantee that interference will not occur in a particular installation. If this equipment does cause harmful interference to radio or television reception, which can be determined by turning the equipment off and on, the user is encourage to try to correct the interference by one or more of the following measures:

- Reorient or relocate the receiving antenna.
- Increase the separation between the equipment and receiver.
- Connect the equipment into an outlet on a circuit different from that to which the receiver is connected.
- Consult the dealer or an experienced radio/TV technician for help.

**FCC**

The Federal Communications Commission (FCC) is an independent United States government agency, created, directed, and empowered by Congressional statute.
The FCC was established by the Communications Act of 1934 as the successor to the Federal Radio Commission and is charged with regulating all non-Federal Government use of the radio spectrum, including radio and television broadcasting, and all interstate telecommunications like wire, satellite and cable as well as all international communications that originate or terminate in the United States. The FCC's jurisdiction covers the 50 states, the District of Columbia, and U.S. possessions.

# 2.0 INSTALLATION GUIDELINES

## 2.1 Environment of Use

- Do not use this unit in rooms with cigarette smoke or oily smoke. This may cause the unit to malfunction.

### Mounting this unit to the ceiling

Check temperature around the unit. When a heater is in use, the ceiling may reach a temperature higher than anticipated, hence leading to malfunction of the unit.

### Precautions of Usage

This unit makes use of a light source lamp that may reach a high temperature during projection. Do not allow projection under the following conditions. Doing so may cause fire or malfunction of the unit.

- Projection with the unit laid on sides.
- Projection with the unit installed in an unreasonable angle. Avoid using this unit at an angle of more than 15° horizontally and 5° vertically. Doing so may cause unevenness in the color or shorten the lamp life.
- Projection at a location that blocks the air inlets or exhaust vents.
- Projection at a place exposed to air blasts from an air conditioner.

## 2.2 Air-Flow and Space Requirements

This unit can be installed in table, ceiling, rear table or rear ceiling position. Make sure that the unit is installed within the space requirements described below.

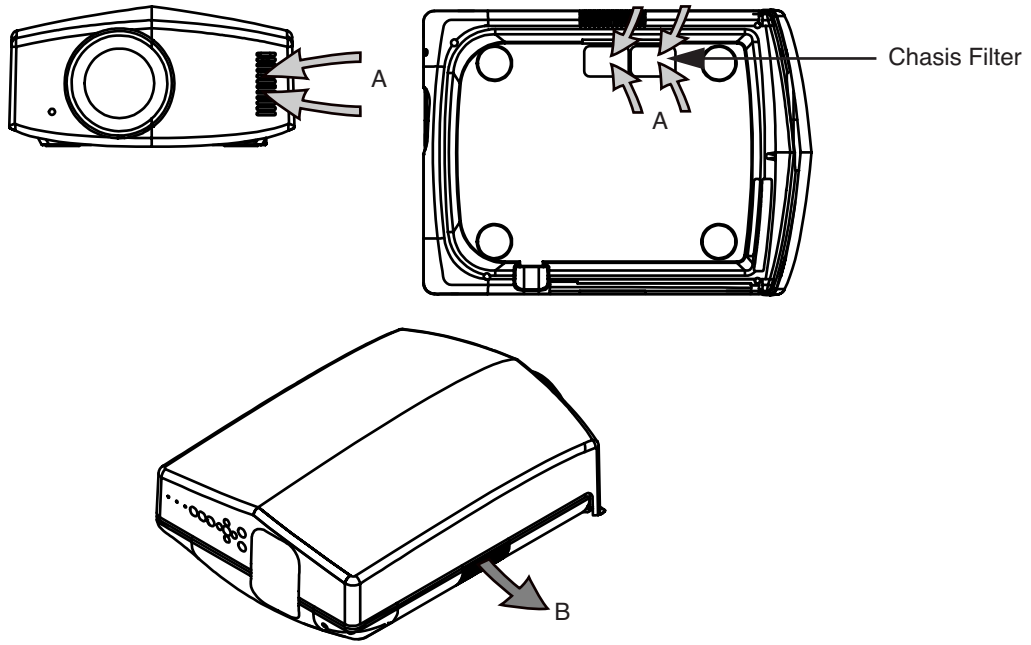


- A: Air inlets
- B: Air outlet

***Air flow***

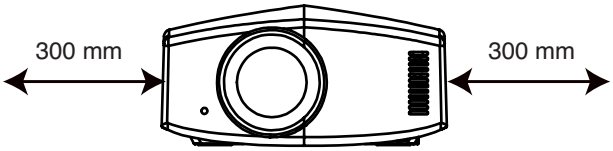


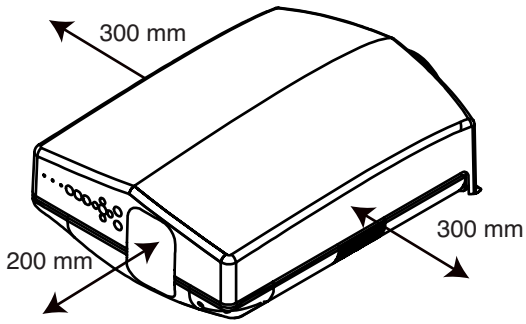


***Space requirements***

## 2.3 Ceiling mounting the unit

When mounting of this unit is required, make use of the 4 screw holes (M5x20 screws) at the bottom of this unit indicated by the letter A. Allow sufficient space around the air inlets to avoid blocking them.

### Precautions for Ceiling-mount

- To ceiling-mount this unit, special expertise and techniques are necessary. Be sure to ask your dealer or specialist to perform mounting.
- Do not mount at places that may be subjected to vibration and shock.
- Depth of the screw holes (A) is 22 mm. Do not use long screws as you may damage inside the projector.
- Install at a safe place in case this unit or a part of it may drop. If the light-source lamp is broken, small pieces of glass from the mesh of the filter may appear outside the unit.
- Regardless whether the unit is still under guarantee, Cineversum is not liable for any product damage caused by mounting the unit with third party ceiling mount or when the environment is not suitable for ceiling-mount.

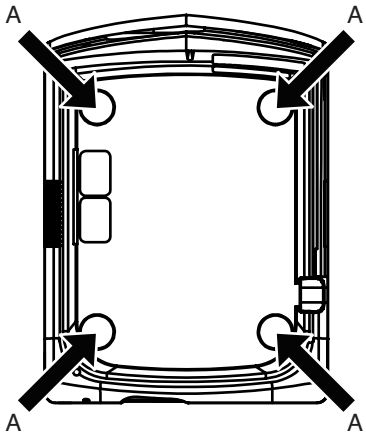

## 2.4 Projection Distance and Offset Setting

### Projection Distance

| Projection Screen Size Diagonal size (Aspect Ratio 16:9) | Projection Screen Size Base size (Aspect Ratio 16:9) | Projection Screen Height (Aspect Ratio 16:9) | Blackwing Four |
|---|---|---|---|
| | | | Projecting Distance minimum - maximum |
| 50" (1270 mm) | 43,6" (1107 mm) | 24,5" (623 mm) | 151 cm - 305 cm |
| 60" (1524 mm) | 52,3" (1328 mm) | 29,4" (747 mm) | 178 cm - 366 cm |
| 70" (1778 mm) | 61,0" (1550 mm) | 34,3" (872 mm) | 209 cm - 428 cm |
| 83" (2108 mm) | 72,3" (1837 mm) | 40,7" (1034 mm) | 251 cm - 507 cm |
| 92" (2337 mm) | 80,2" (2037 mm) | 45,1" (1146 mm) | 279 cm - 562 cm |
| 100" (2540 mm) | 87,2" (2214 mm) | 49,0" (1245 mm) | 301 cm - 613 cm |
| 110" (2794 mm) | 95,9" (2435 mm) | 53,9" (1370 mm) | 331 cm - 675 cm |
| 138" (3505 mm) | 120,3" (3055 mm) | 67,7" (1718 mm) | 418 cm - 843 cm |
| 150" (3810 mm) | 130,7" (3321 mm) | 73,5" (1868 mm) | 453 cm - 860 cm |
| 180" (4572 mm) | 156,9" (3985 mm) | 88,2" (2241 mm) | 545 cm - 1107 cm |
| 200" (5080 mm) | 174,3" (4428 mm) | 98,1" (2491 mm) | 6060 cm - 1230 cm |

- The projection screen sizes and projecting distances in the table above are provided only as a guide. Please use them as reference during installation.
- Use a projection image of 16:9 aspect ratio for setup adjustment.

### Projector position : setting the correct lens shift

The optimum image can be obtained when the centre of this projector's lens and the screen are placed perpendicular to each other. Take note of the projection angle when placing them. You can also use up to +/- 15° up and down position and configure trapezoidal correction.

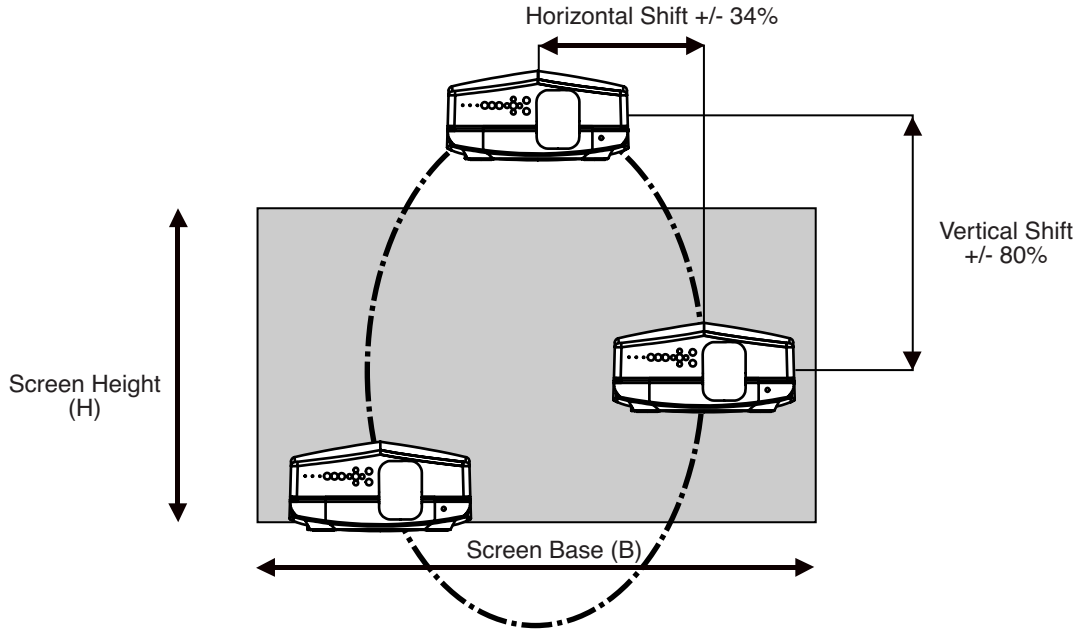


This unit comes with a vertical and horizontal shift to suit most installations. Make sure that your installation does not exceed 80% vertical offset and 34% horizontal offset to avoid trapezoidal correction.

This unit comes with a optical shift that features vertical and horizontal adjustment of the projection screen position. Adjust the picture to your screen.

- The Vertical Shift level is between -80% and 80% of the Screen Height (0.80 x H).
- The Horizontal Shift level is between -34% and 34% of the Screen Base (0.34 x B).
- The shift level is set to 0% vertically and horizontally by default, that means that the optical lens is aligned with the center of the screen.
- If the projector is not installed vertically, use trapezoidal Correction to fulfill your screen.
- If you plan to use both the vertical and horizontal shifts, make sure to not exceed the values contained in the tab below:

| Left - Right shift | 0% | 5% | 10% | 15% | 20% | 25% | 30% | 34% |
|---|---|---|---|---|---|---|---|---|
| max. Up - Down shift | 80% | 74% | 66% | 57% | 47% | 34% | 18% | 0% |

#### 2.4.0.1 Adjust the picture position

The Blackwing Four projector has motorized vertical and horizontal shifts. Browse into the Menu to the [Lens Control] setting into the [Installation] menu, select the shift adjustment. Or use the direct access button on the Remote Control Unit [LENS] to make the lens control adjustment.
You can use self-generated test pattern of the projector or an external pattern, from a calibration DVD by example, by setting the [Test Pattern] to Off.

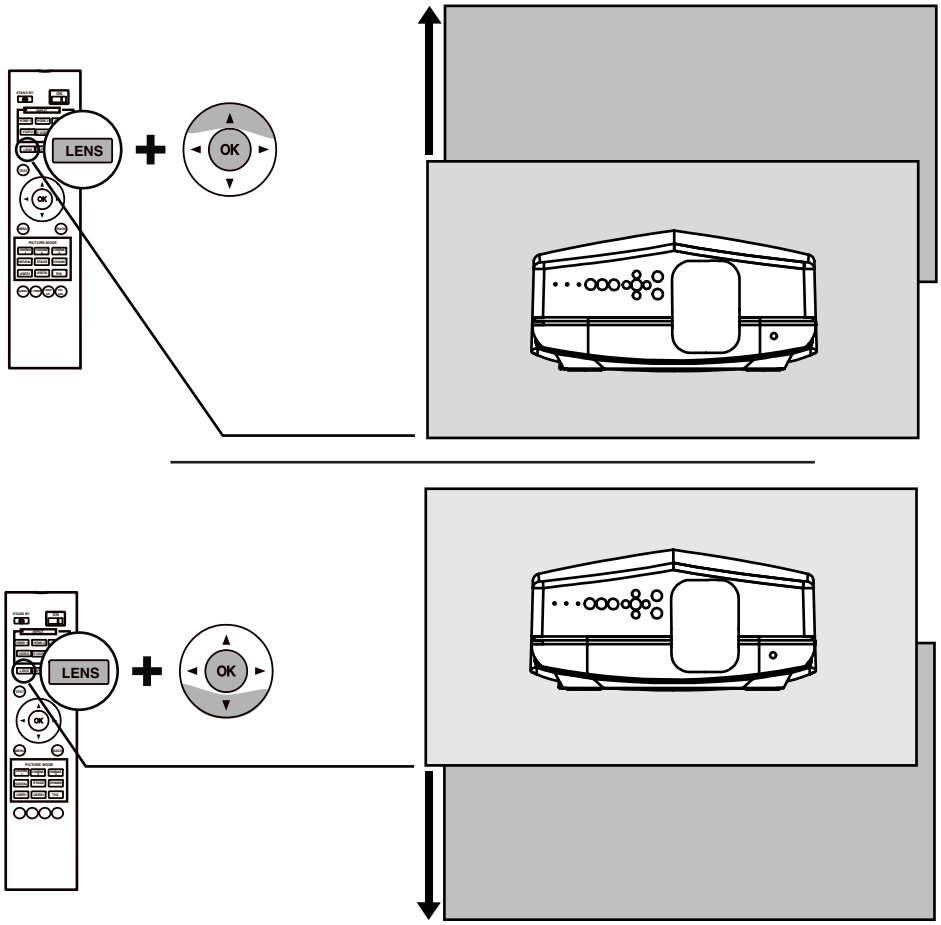


***Select the [Shift] adjustment and move the picture with the navigation buttons.***

## Adjust the picture Focus

Into the [Lens Control] menu, press the [Ok] button to access the [Focus] adjustment. Use the up and down buttons to adjust the picture focus.

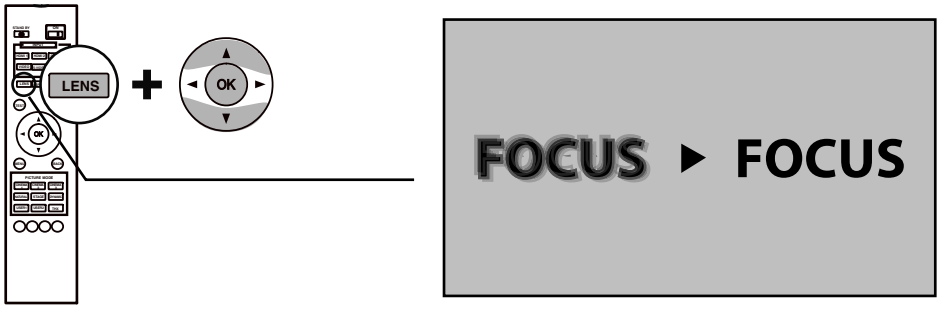


***Select the [Focus] adjustment and obtain a clear picture using [Up] and [Down] buttons.***

## Adjust the picture Zoom

Into the [Lens Control] menu, press the [Ok] button to access the [Zoom] adjustment. Use the up and down buttons to adjust the picture size until the screen is completely filled.

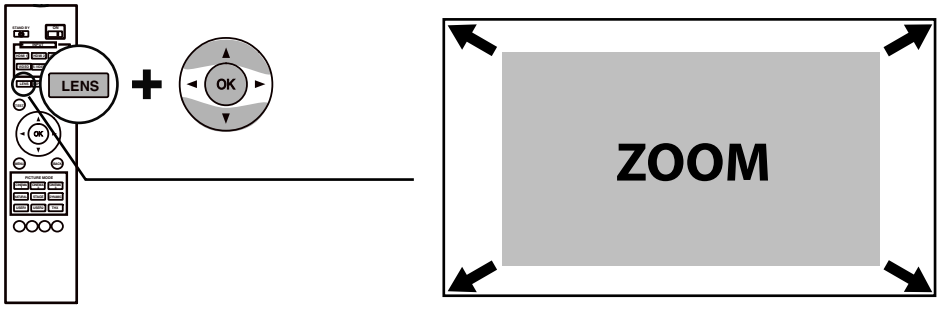


***Select the [Zoom] adjustment and resize the picture using [Up] and [Down] buttons.***

# 3.0 REMOTE CONTROL UNIT (RCU)

## 3.1 General view

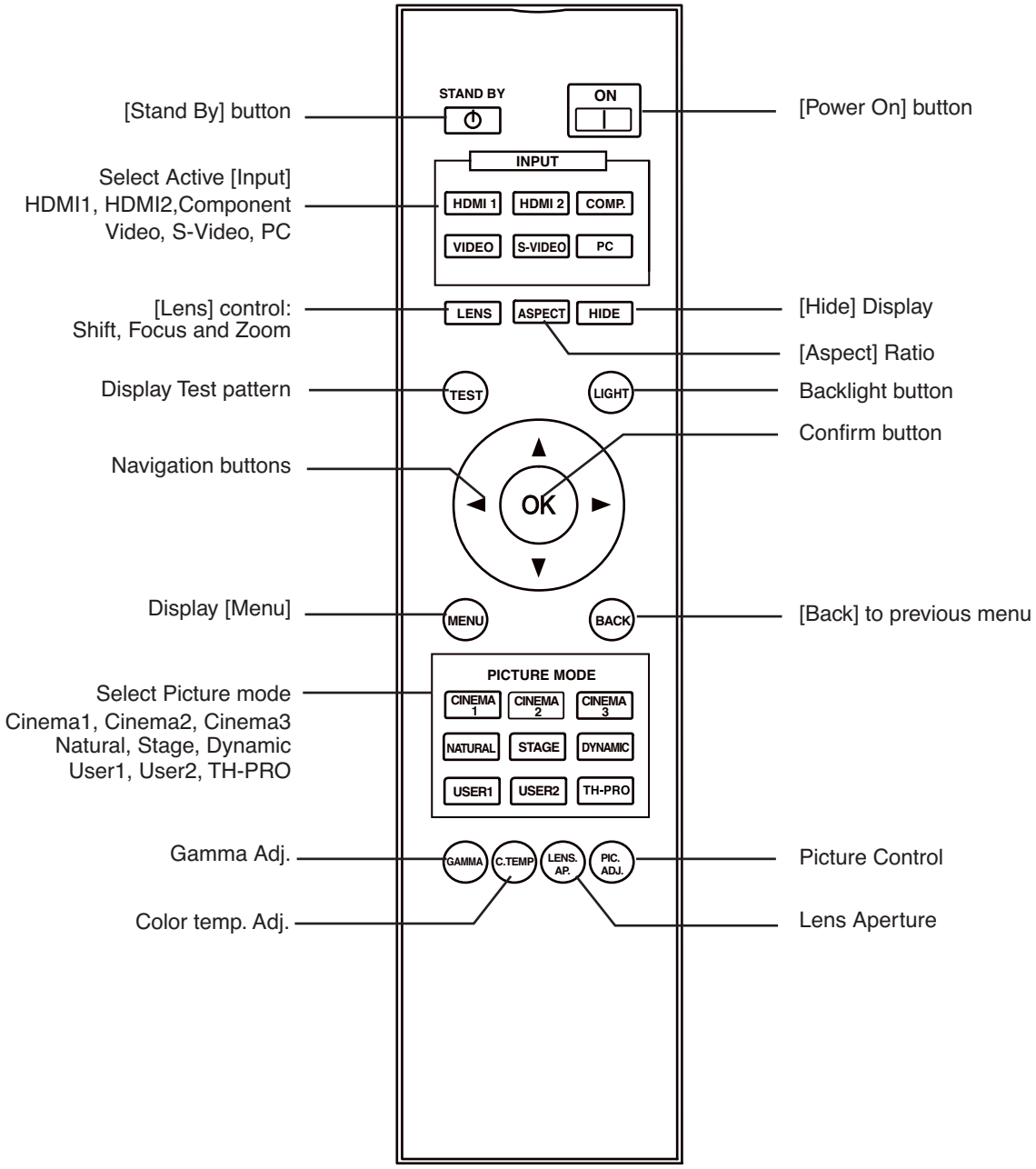


## 3.2 Loading and replacing batteries

- Push the cover tab with the fingernail a little backwards and pull upwards the cover top.
  Slide the cover forward to remove.
- Push the battery body towards the spring and lift up to remove.
  Insert two AAA size batteries, making sure the polarities match the + and - marks inside the battery compartment.
- Insert the lower tab of the battery cover in the gap at the bottom of the remote control, and press the cover until it is firmly closed.

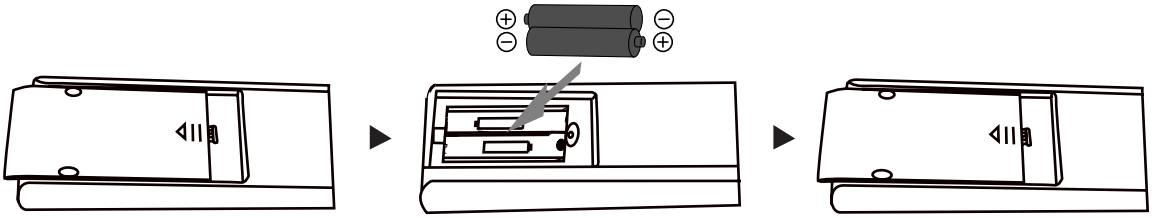

**CAUTION WHEN USING BATTERIES**

Do not mix new and old batteries.Do not mix different type of batteries as they are different in characteristics. Insert batteries according to the + and - marks on the battery case. Do not put batteries into fire or recharge them if they are not design to. Remove the batteries if the remote control is not to be used for a prolonged period. Use manganese batteries wherever possible, Do not use rechargeable batteries.

**NOTICE**

If the remote control has to be brought closer to the projector to operate, it means that the batteries are wearing out. When this happens, replace the batteries. Insert the batteries according to the + and - marks.

## 3.3 How to use the remote control unit

The operable distance of the remote control unit is about 7m for direct reception and within 30 degree angle with respect to the sensor.

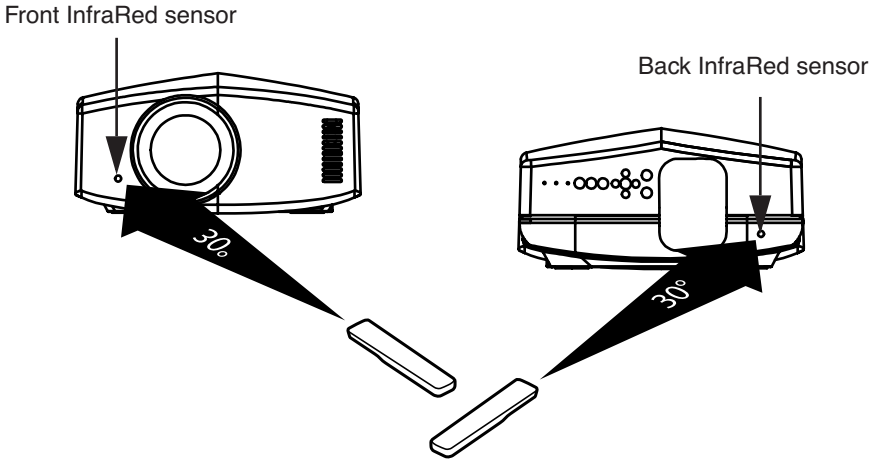


The remote control unit can be used by having the transmission signal reflected off a screen, as the effect of signals reflected from the RCU differ with the type of screen used, operable distance may decrease.

# 4.0 GETTING STARTED

## 4.1 General View

### Front side

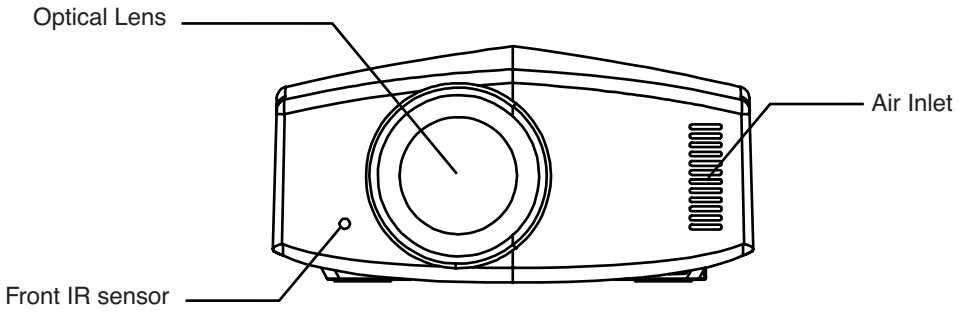


- Air Inlets: see “Air-Flow and Space Requirements”, page 8.

### Rear side

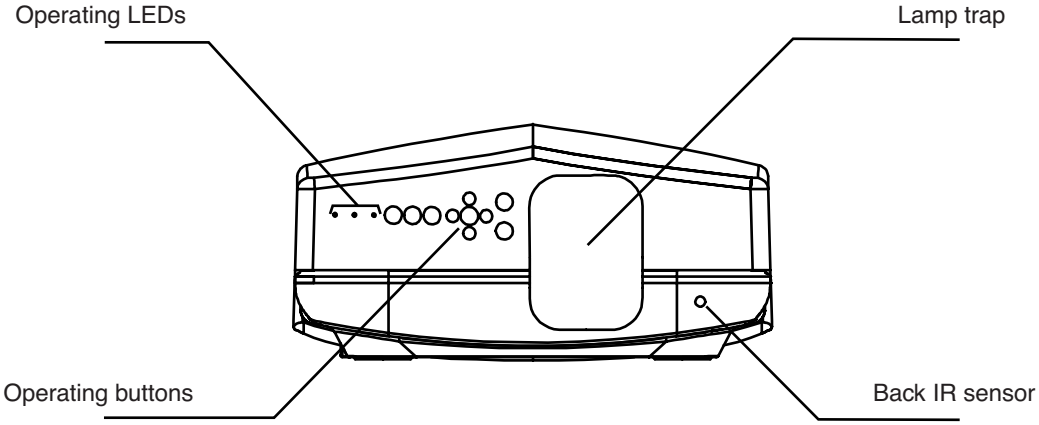


- Operating LEDs: see section 4.3, page 17 for more details.
- Operating and Navigation buttons described in section 4.4, page 18.
- Lamp trap: see “Procedure for Lamp Replacement”, page 34 for more details about lamp replacement.

### Input Panel side

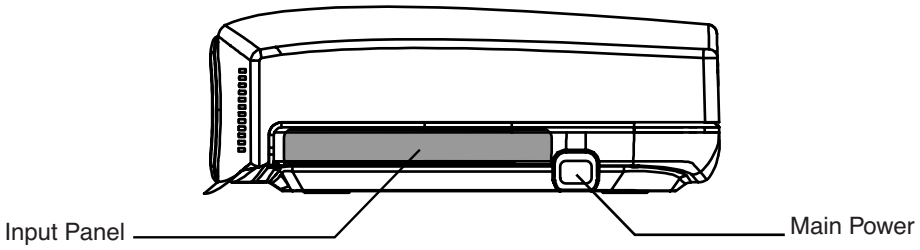


- Main Power: connect the power cord as shown below.
- Input Panel: connect your video source to the correct input.

## 4.2 Connecting the Power Cord

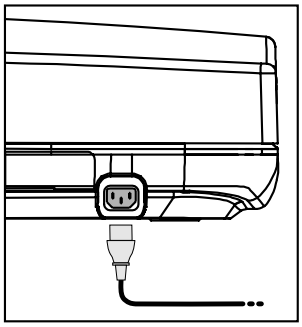

•Before plugging in the Power Cord, ensure that all devices have been connected.

•Connect the power cord to the power input terminal of the projector.

**CAUTION AGAINST FIRE AND ELECTRIC SHOCK**

Since the power consumption of this unit is high, insert the power plug directly into a wall outlet.
When not using devices, remove the power plug from the wall outlet.
Do not use power cords for connection other than specified.
Do not use a power voltage different from that which is indicated.
Do not cut, tear or modify the power cords. Also, do not place a heavy object on, heat or stretch the power cords as this may cause damage to the cords.
Do not insert or pull plugs with a wet hand.

## 4.3 Operating LEDs

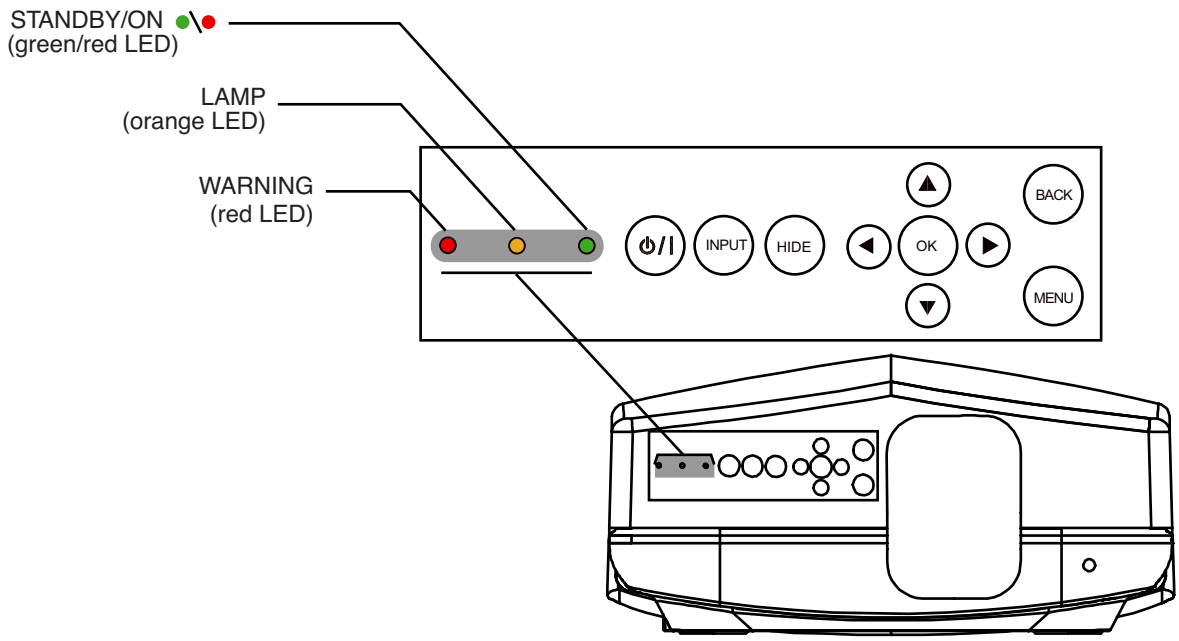


| ID | Operating LED | | | | Description |
|---|---|---|---|---|---|
| | STANDBY/ON (green or red) | LAMP (orange) | WARNING (red) | Blinking | |
| 1 | red | - | - | - | Unit is in standby mode |
| 2 | green | - | - | - | Unit is in operate mode (during projection) |
| 3 | blinking green | - | - | Yes | Unit is in operate mode, but HIDE is ON. Press again on HIDE button to obtain a picture. |
| 4 | blinking red | - | - | Yes | Unit is in cooldown mode. (switching off) |
| 5/6 | - | orange | - | - | Lamp time has reached 2900 hours, prepare to replace the lamp before 3000 hours. |

**CAUTION**

When in Cool Down mode, do not pull out the plug from the outlet. Also, do not block the air inlets/exhaust vents by standing the projector on its end or laying it on its side.

## 4.4 Operating and Navigation Buttons

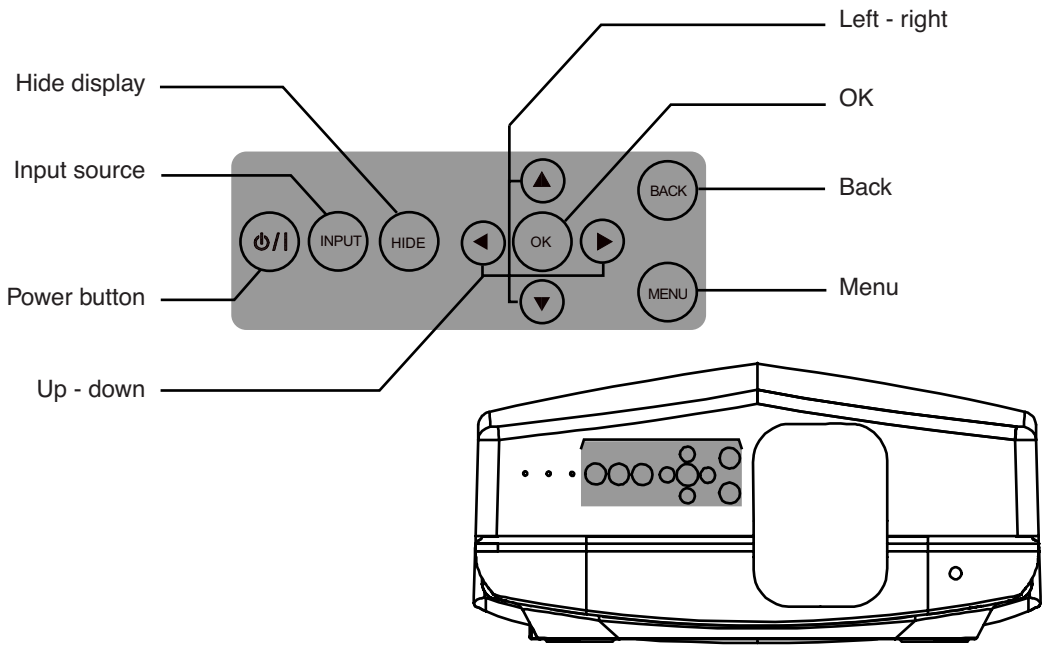


| Button | Description |
|---|---|
| **Hide display** | To temporary hide the picture. |
| **Input source** | To switch input source. |
| **Power button** | To turn On or Off the projector. |
| **Up - down - left - right** | To navigate into On Screen Display (OSD) Menu. |
| **OK (Enter)** | To select or to confirm action. |
| **Back** | To return to previous menu or cancel action. |
| **Menu** | To display On Screen Display (OSD) Menu. |

# 5.0 CONNECTIONS

This unit can be connected to any compatible devices using the available inputs listed below:

- 2x HDMI revision 1.3 with HDCP
- 1x Video
- 1x S-Video
- 1x Component (YPbPr / RGB / SCART)
- 1x 12 volt Trigger
- 1x RS-232
- 1x PC - VGA (sub D-15

The RS-232 terminal port can be used for automation.
For audio output, connect your audio video source to an amplifier.

This unit features a 12 Volt trigger output that can be used to control external device in On/Off mode or together with an optional anamorphic lens systems.

## 5.1 Connecting a device to the projector

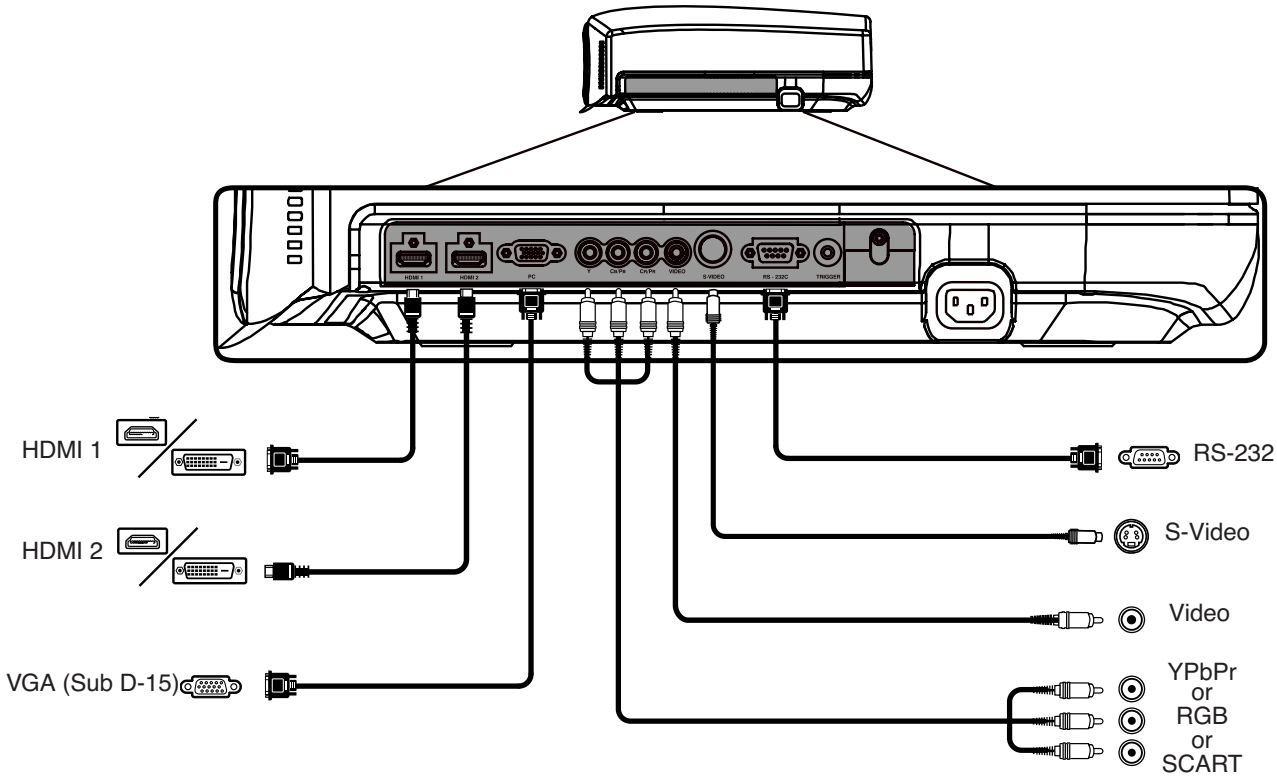


| Input | Device |
|---|---|
| **HDMI1, HDMI2** | HDMI or DVI-D sources: Blu-Ray Disc player, DVD-player with HDMI, Game Console, Computer with DVI-D output. |
| **VGA** | Computer (VGA output), Multimedia box . |
| **RS-232 (*)** | Automation Device, Control Device or Computer with RS-232* |
| **S-Video** | DVD-Player, Game Console, digital camera, video camera |
| **Video** | DVD-Player, Computer video, Game Console (SD), digital camera, video camera. |
| **YPbPr or RGB or SCART (EU)** | DVD-Player, HDTV Receiver, Game Console (SD or HD), DVB-T receiver, Multimedia box, Analog Camera.<br>In order to use a SCART device* (Europe) on the Component input, you must use cable sold separately and configure it into the projector menu. |

Make sure to use a certified HDMI cable, especially when the distance between the different devices are longer than 5 meters. If it is the case, the use of a split system or optical fiber cable is highly recommended.

### (*) Using RS-232 with a Computer

The RS-232 Control and Automation may require specific software and tools. See “RS-232 input and IR Codes”, page 37 for more details on RS-232 cabling and protocol.

For input resolution and refresh rates, check the “PC compatible signals”, page 41.

## 5.2 Connecting a SCART device

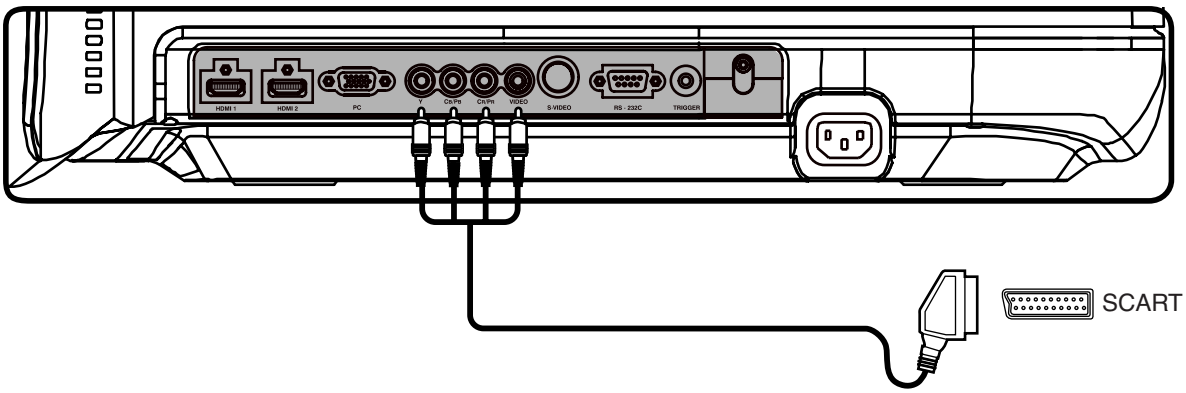


**CONNECTING A SCART DEVICE**

This unit can be connected to a SCART device using a SCART to RGB+Sync cable. Once connected, select the COMP. input as active input. Then browse into the projector menu to Input Signal > COMP. and select SCART option.

## 5.3 Caution when connecting a device

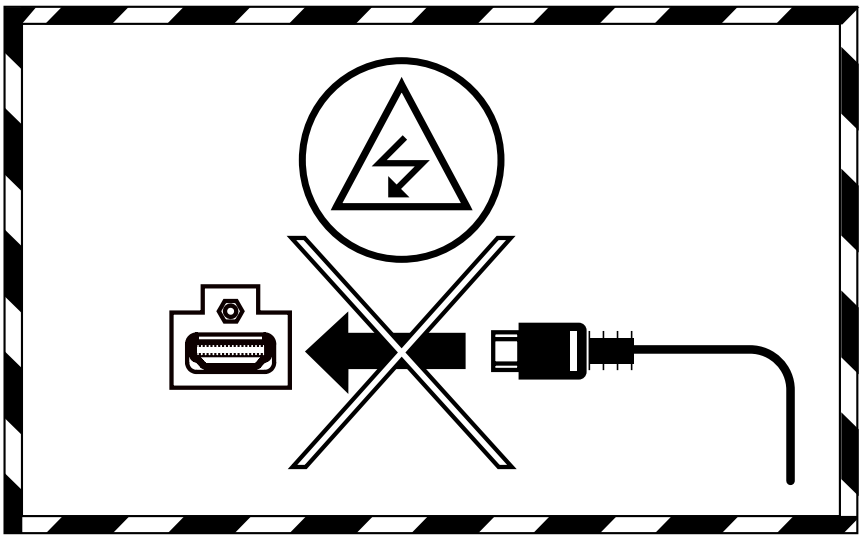

**CAUTION !**

Prior to connecting any device to this unit, switch the projector in standby mode
Never connect a HDMI source to this unit when the projector is in operate mode. The HDMI termination is a self-powered connection and can cause electric discharges.

# 6.0 MENU AND PICTURE SETTING

## 6.1 Menu Structure

| MAIN MENU | SUBMENU | AVAILABLE OPTIONS | |
|---|---|---|---|
| Picture Adjust | Picture Mode | (Movies) | Cinema1 |
| | | (Vivid HDTV) | Cinema2 |
| | | (SF movies or anims) | Cinema3 |
| | | (Video programs) | Natural |
| | | (Concerts) | Stage |
| | | (bright lightning) | Dynamic |
| | | | User1 |
| | | | User2 |
| | | | TH-PRO |
| | Contrast | | -50 +50 |
| | Brightness | | -50 +50 |
| | Color | | -50 +50 |
| | Tint | | -50 +50 |
| | Color Temp. | | 5800K |
| | | | 6500K |
| | | | 7500K |
| | | | 9300K |
| | | | High Bright |
| | | | Custom1 |
| | | | Custom2 |
| | | | Custom3 |
| | Gamma | | Normal |
| | | | A |
| | | | B |
| | | | C |
| | | | D |
| | | | Custom1 |
| | | | Custom2 |
| | | | Custom3 |
| | Advanced | Sharpness | 0 - 100 |
| | | Detail Enhancement | -50 +50 |
| | | Noise Reduction (SD only): | |
| | | DNR | 0 - 16 |
| | | MNR | 0 - 16 |
| | | BNR | On, Off |
| | | CTI (SD only) | Off, Low, Mid, High |
| | | Color Management | Off |
| | | | Custom1 |
| | | | Custom2 |
| | | | Custom3 |
| | | Crystal Motion | Off, Low, High |
| | Lens Aperture | | -15 - 0 |
| | Reset Profile | | Confirm |

| | | | |
|---|---|---|---|
| Input Signal | HDMI inputs | Input | Auto<br>(16 - 235) Standard<br>(0 - 255) Enhanced |
| | | Color Space | Auto<br>YCbCr(4:4:4)<br>YCbCr(4:2:2)<br>RGB |
| | | Control with HDMI (CEC) | On, Off |
| | COMP. input | Color Space | YCbCr<br>RGB<br>SCART |
| | Video / S-Video inputs | NTSC Setup Level | 0 IRE<br>7.5 IRE |
| | | Color System | Auto<br>NTSC<br>NTSC 4.43<br>PAL<br>PAL-M<br>PAL-N<br>SECAM |
| | PC input (BW3 only) | | Auto Alignment<br>Tracking<br>Phase |
| | | Picture position | Hor., Vert. |
| | Picture Position | | Horizontal<br>Vertical |
| | Aspect (Video only) | | 4:3<br>16:9<br>Zoom |
| | Aspct (Computer only) | | Auto<br>Just<br>Full |
| | V-stretch | | On, Off |
| | Over Scan (SD only) | | (2.5%) On<br>Off |
| | Mask (HD only) | | 2.5%<br>5%<br>Off |
| | Film Mode (only 480i, 576i, 1080i) | | Auto, Film, Off |
| Installation | Lens Control | Focus | |
| | | Zoom | |
| | | Shift | |
| | | Test Pattern | On, Off |
| | | Lock | On, Off |
| | Pixel Adjust | horiz. Red | 1 - 7 |
| | | horiz.Green | 1 - 7 |
| | | horiz.Blue | 1 - 7 |
| | | vert. Red | 1 - 5 |
| | | vert. Green | 1 - 5 |
| | | vert. Blue | 1 - 5 |
| | Installation Style | | Front<br>Ceiling Mount (Front)<br>Rear<br>Ceiling Mount (Rear) |
| | Keystone | | Horizontal, Vertical |
| | Screen Adjust | | Off<br>A<br>B<br>C |

| | | |
|---|---|---|
| Display Setup | Back Color | Blue, Black |
| | Menu Position | select position |
| | Menu Display | 15sec, On |
| | Line Display (input setting) | 5sec, Off |
| | Source Display (active input) | On, Off |
| | Logo | On, Off |
| | Language | Select between 12 languages |
| Function | Lamp Power | Normal<br>High |
| | Trigger | Off<br>On (Power)<br>On (Vstretch) |
| | Test Pattern | Select between 6 Test Patterns |
| | Off Timer | 1 hour, 2 hours, 3 hours, 4 hours |
| | High Altitude Mode | On, Off |
| Information | Input Image Connector | |
| | Input Source name | |
| | PC Resolution | |
| | PC H Freq. | |
| | PC V Freq. | |
| | Deep Color Depth | |
| | Lamp use | |

## 6.2 Picture Adjust menu

### Picture Mode

Three preset picture modes are available and they can be applied to any input. A picture mode retains the Picture adjustments:

- Cinema1 setting is best suited for general movie watching.
- Cinema2 setting is optimized for vivid based in HDTV standards. Best to be used with animation or vivid movies.
- Cinema3 setting brings a cool tone to the picture. Best used with for sciences fiction movies.
- Natural setting for natural hues and tones. Best for dramas and video.
- Stage setting for live concerts or stage performances.
- Dynamic setting to be used when the room cannot be completely dark.
- TH-PRO setting to obtain a non over-saturated colors in a dark environment. Optimized for movie projection.

Additionally, you can define 2 user modes to finely tune the projector to your video source and the ambient light.

- User1
- User2

### Contrast

The contrast function is used to adjust the contrast between the light and dark areas of the displayed image. A correct contrast setting is important for good image reproduction. Adjust the Contrast value between -50 and 50.

### Brightness

The brightness function is used to adjust the overall light output. Adjust the Brightness value between -50 and 50.

### Color

The Color function (or Saturation) is used to adjust the color saturation levels. Adjust the Color value between -50 and 50.

### Tint

The hue function is used to adjust the color tint to obtain true color reproduction. Adjust the Tint value between -50 (more red) and 50 (more green).

### Color Temperature

Color temperature stands for the spectral properties of a light source. Low color temperature implies warmer ambiance (more yellow/red) while high color temperature implies a colder light (more blue). This setting can be set to:

- 5800K: warm colors
- 6500K. neutral colors, match current HDTV and Blu-Ray encoding.
- 7500K: brings a bluish tinge to the picture, best suited for night scenes.
- 9300K: cold picture best suited for computer and graphics.
- High Bright: select the brightest output mode available.
- Custom1
- Custom2
- Custom3

A Custom setting allows a fine adjustment of a Color Temperature by selecting in the Correction Value tab 5800K, 6500K, 9300K or High Bright. Adjust the Gain values (bright part) and Offset values (dark part) for each color Red, Green and Blue.

Accurate color temperature may require professional tools such as dedicated software and colormeter. Wait at least 20 minutes after startup before modifying the picture settings.

### Gamma

Gamma is the relationship between the color values of the data and the color values displayed. The Gamma coefficient makes it possible to adjust the brightness of the midtones only without affecting the very bright and very dark areas. If gamma is set too high, middle tones appear too dark. If it's set too low, middle tones appear too light. The Gamma correction factor can be set to:

- Normal: Standard tones
- Gamma A: rich dark tones.
- Gamma B: for film and movie projection.
- Gamma C: for film and movie projection with more detailed blacks than setting B.
- Gamma D: this setting is recommended for bright midtones and Computer like projection.
- Custom1
- Custom2
- Custom3

The Custom data can be set to:

- Correction Value: a unique value that will act as a gamma coefficient between 1.8 and 2.6.
- Gamma Adjustment: the gamma curve can be adjusted for each color Red, Green and Blue.
- Copy: copy the adjusted values to temporal memory.
- Paste: paste values stored in memory to current profile.
- Reset: reset to the default 2.2 gamma coefficient.

Gamma Adjustment can be copied from all modes. Paste can only be used for Custom modes.

## Advanced

### 6.2.0.1 Sharpness

The Sharpness function is used to adjust the image sharpness of the picture. Adjust the Sharpness value between 0 (soft) and 100 (sharper).

### 6.2.0.2 Detail Enhancement

Detail Enhancement function is used to improve the picture quality. You can set it from -50 to 50.

### 6.2.0.3 Noise Reduction (SD video only)

DNR: Digital Noise Reduction. You can set it from 0 up to 16 to reduce the image noise.

MNR: Mosquito Noise Reduction function is used to reduce the Mosquito noise on the picture, generally found in compressed digital video signals such as television broadcast or encoded movies. Adjust the MNR value from 0 up to 16 to reduce the typical broadcast picture mosquito noise

BNR: Block Noise Reduction uses a large portion of the picture to reduce the digital noise, this ensures a higher quality filter. Adjust the BNR value to On or Off.

### 6.2.0.4 CTI (SD video only)

Color Transition Improvement. Set it to Off, Low, Middle or High to reduce the color smear (color contour correction). Caution: this function may alter the original picture chrominance.

### 6.2.0.5 Color Management (TSL adjustments)

The Color Management gives the installer an unique calibration ease with the integrated Color Adjustment menu: each primary and secondary color can be independently calibrated to obtain a precise color balance in a snap.

Adjust the Red, Green, Blue, Yellow, Cyan and Magenta Tints, Saturations and Luminances and store them into Custom1, Custom2 or Custom3 profiles.

### 6.2.0.6 Crystal Motion Drive (120Hz)

The Crystal Motion function uses a 120Hz video processing to render a smooth and clear motion for movies shot at 24Hz or HD movies at 60Hz. Set the correct level between low and high for 1080p24Hz movies or Film mode input to obtain a clear image.

## Lens Aperture

The lens is equipped with a variable electronic aperture. This function is used to optically adjust the light output depending on the viewing conditions and the light ambiance. Adjust from the correct aperture from partially closed to fully opened.

## Reset

Reset values to their default settings.

## 6.3 Input Signal menu

### HDMI Inputs

This menu is available if the selected active input is HDMI1 or HDMI2.

#### 6.3.0.1 Input

Auto: The input dynamic range is automatically detected and configured.
Standard: Force dynamic range output to 16-235.
Enhanced: Force dynamic range output to 0-255.

#### 6.3.0.2 Color Space

Auto: The source color space is automatically detected and configured.
YCbCr(4:4:4): Set color space to YCbCr 4:4:4.
YCbCr(4:2:2): Set color space to YCbCr 4:2:2.
RGB: Set color space to RGB 4:4:4.

#### 6.3.0.3 Control with HDMI (CEC)

Off: By default the CEC communications are disabled.
On: Enables CEC communications to be sent to the projector through HDMI cable.
CEC: Consumer Electronic Control

### Component

This menu is available if the selected active input is Component.

- Y Pb/Cb Pr/Cr: Select this option if the COMP. input is connected to a component video signal.
- RGB: Select this option if the COMP. input is used with a RGB video source.
- SCART: Select this option if the COMP. and VIDEO inputs are used together to receive RGB+Sync signals from a European SCART source.

### Video / S-Video

This menu is available if the selected active input is either Video or S-Video.

#### 6.3.0.1 NTSC Setup level

This function can adjust the black level of the signal to 7.5 IRE instead of 0IRE. 7.5 IRE is widely used for NTSC standard.

#### 6.3.0.2 Color System

This function allows a manual selection of the color system to be used between NTSC, NTSC4.43, PAL, PAL-M, PAL-N and SECAM. The default setting is Auto. When Auto is selected, the input format is automatically detected and the correct color system is applied.

### PC

This menu is available if the selected active input is PC (Sub-D15) input.

- Auto Alignment: Automatically adjusts Tracking, Phase and Picture Position
- Tracking: Adjust the horizontal size and display area of the picture.
- Phase: Adjust flickering and blurred pictures.
- Picture Position: Adjust the display position of the picture.

### Picture Position

Depending on your source, you may find that the picture should be adjusted into the screen, adjust the horizontal and vertical position of the picture into the screen.
Some signals may not be fully displayed, adjust this setting properly when necessary.

### Aspect Ratio

When watching a movie or video program, you can manually set the desired aspect ratio to fill your screen. Select the correct aspect ratio depending on your source:

#### 6.3.0.1 For Video sources

- 4:3. The original source is considered as 4:3 format. Generally SDTV broadcasts and entertainments.
- 16:9. The picture size is 16:9, generally most recent DVDs, Blu-Ray discs and HDTV broadcasts.
- Zoom. The zoom function is useful to zoom in the picture and eliminate black bars

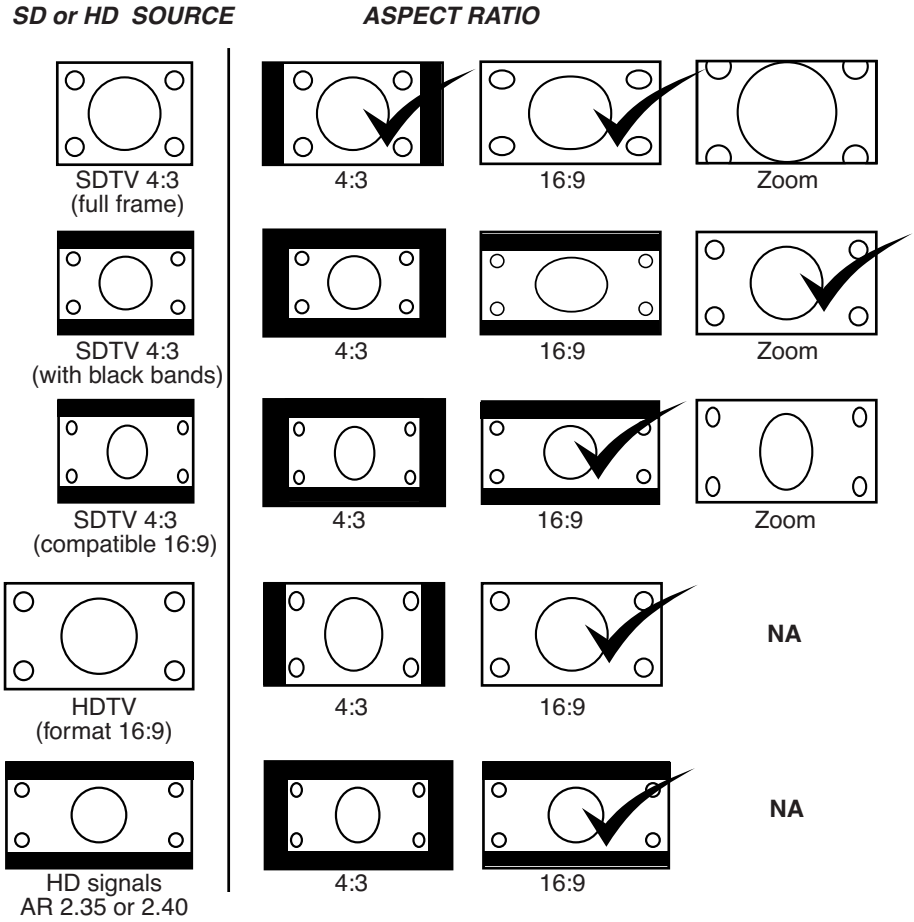


***Aspect Ratio applied to different source formats.***

### 6.3.0.2 For PC sources

- Auto. Zoom the picture to fill either the screen height or the screen base which ever happens first.
- Just is a 1:1 mode, pixel to pixel mapping, no scaling.
- Full. Stretch the picture full screen.

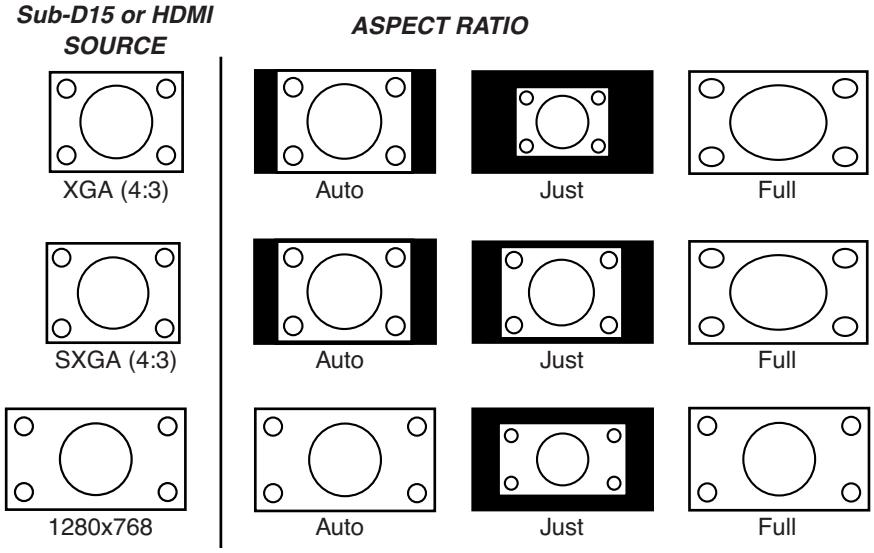


***Aspect Ratio applied to PC-signals.***

## V-Stretch (for Video sources)

- This setting is available only for SD and HD signals. If you enable this function, the original picture is stretched to

fit an installation with anamorphic lens. The picture fills completely the projector panels, using the maximum available resolution for 2.35-2.40 aspect ratio movies.

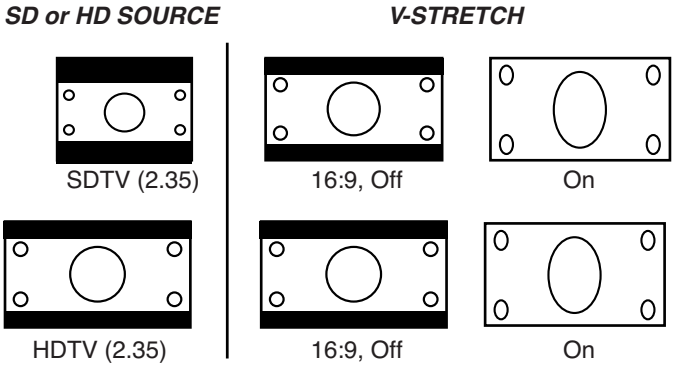


***V-Stretch applied to SD and HD sources.***

### Over Scan (only SD) and Mask (only HD)

The standard definition (SD) signals generally use a frame which is larger than the visible portion of the picture, this is to ensure a larger compatibility with old-fashioned scanning devices such as CRT-televisions. Depending on your source, you may enable or disable this feature to hide the outer area of the picture.
The Mask function available for high definition (HD) signals can hide the unexpected scaling artefacts generally found in HDTV broadcast program. You can set it to Off, 2.5% or 5%.

### Film Mode (only 480i, 576i, 1080i)

To provide a better video quality, you can manually set the Film Mode cadence when necessary. Set it from default Auto setting to Film to force the Film Mode or set it to Off to disable it. This function is only available for interlaced input signals: 480i, 576i and 1080i.

## 6.4 Installation Menu

### Lens Control

This menu gives access to the control of the lens. Browse into this menu to adjust:

#### 6.4.0.1 Focus

Adjust the lens focus to obtain a clear picture.

#### 6.4.0.2 Zoom

Adjust the lens zoom to fill the screen with the picture.

#### 6.4.0.3 Shift

Adjust lens shift to center the picture into the screen.

#### 6.4.0.4 Image Pattern

If set to On, an internal pattern will be generated to adjust the current setting. If you want to use an external generator, turn this option to Off.

#### 6.4.0.5 Lock

Once the Lens is correctly set, you may lock this setting menu by turning the Lens control Lock to On. Any attempt to access the Lens control menu will lead to the display of a warning message.

### Pixel Adjust

This menu allows a fine adjustment of the red, green and blue panels alignment. Horizontal adjustment moves the selected color to the right, vertical adjustment moves it up.

- Horizontal Red (1 to 7)
- Horizontal Green (1 to 7)
- Horizontal Blue (1 to 7)
- Vertical Red (1 to 5)
- Vertical Green (1 to 5)

- Vertical Blue (1 to 5)

### Installation Style

Flip the image to the left or right, up or down according to the projection state of the projector:
Front, Ceiling Mount (F), Rear or RearCeiling mount (R)

### Keystone

Compensate for trapezoidal distortion caused by installation. Independently to the screen orientation, make sure that the projector is not tilt more than 5% left/right and 15% up/down.

### Screen Adjust

This setting corrects the color balance derived from the reflective characteristics of the screen without altering the global picture settings. You may select:

- Off: No modification
- Mode A: slightly reddish
- Mode B: slightly greenish
- Mode C: slightly bluish

## 6.5 Display Setup Menu

### Back Color

Configures the screen color displayed when there is no active input. Set to Blue or Black.

### Menu Position

Upper left, Upper right, Center, Lower right, Lower left.

### Menu Display

15sec: Display menu for 15 seconds before fade out.
On: Always display menu.

### Line Display

5sec: Display the input settings for 5 seconds after input selection.
Off: Don't display

### Source Display

On: Display the source of the input signals after input. selection
Off: Don't display.

### Logo

On: Display logo during startup for 5 seconds.
Off: Don't display.

### Language

Choose the OSD language between: English, Japanese, German, Spanish, Italian, French, Portuguese, Dutch, Swedish, Norvegian, Russian and Chinese.

## 6.6 Function Menu

### Lamp Power

The Lamp Output function is used to configure the light output of the lamp. Select Normal to set the lamp to 150W or High, 200W. To avoid any damage to the lamp, you can't changed the lamp power within 90 seconds from the projector startup or 60 seconds after lamp power change.

### Trigger

The 12V trigger output can be used to control any 12V remoted compatible devices such as motorized screens or anamorphic kits: The 12V trigger output is 12Vcc, 100mA. Select the trigger output behavior:

- Off: 12V trigger voltage state is always low.
- On (power):12V trigger state is high when the projector is powered ON.
- On(V-Stretch): 12V trigger is high only when V-Stretch is active. To be used with Anamorphic kits or 2.35 motorized screen.

### Test Pattern

Display 6 types of test patterns. For checking the color condition and tone, and the pixels size. Use whenever necessary.

### Off-Timer

You can configure this automatic power Off function that will switch off the projector when there is no operation and no signal.
Choose the duration of the timer between: Off, 1 hour, 2 hours, 3 hours and 4 hours.

### High Altitude Mode

Select this when the projector is in a location of low atmospheric pressure.
On or Off

## 6.7 Information Menu

### Input Source

Displays the active video input.

### Source

Displays the type of the current video input signal. If PC input is selected, this item cannot be displayed.

### Resolution

If the active input is PC input., its resolution is displayed.

### H. Frequency

In the case of PC signal, the horizontal frequency is displayed.

### V. Frequency

In the case of PC signal, the vertical frequency is displayed.

### Deep Color

Display the bit depth (color depth) of the video signals input from the HDMI terminals. Deep Color is not displayed for YCbCr 4:2:2 signals.

### Lamp Time

Displays the accumulated hours of usage of the lamp.

## 6.8 Expert Calibration

Expert Calibration is accessed using RS-232 or programmable IR-RCU. You can set a Calibration Profile

# 7.0 ANAMORPHIC LENS

## 7.1 Optional 2.35 CineMax and 2.35 THEATRE Concept

The Blackwing Four centralizes the controls and automation commands for both the 2.35 CineMax and the 2.35 THEATRE Concept for a unique, versatile and unexpectedly simple to operate 2.35:1 theatre experience using an Anamorphic Lens.

- Integrated Constant Image Width scaler.
- Dedicated menu to program the 12V Trigger output.

## 7.2 Using the Remote Control Unit.

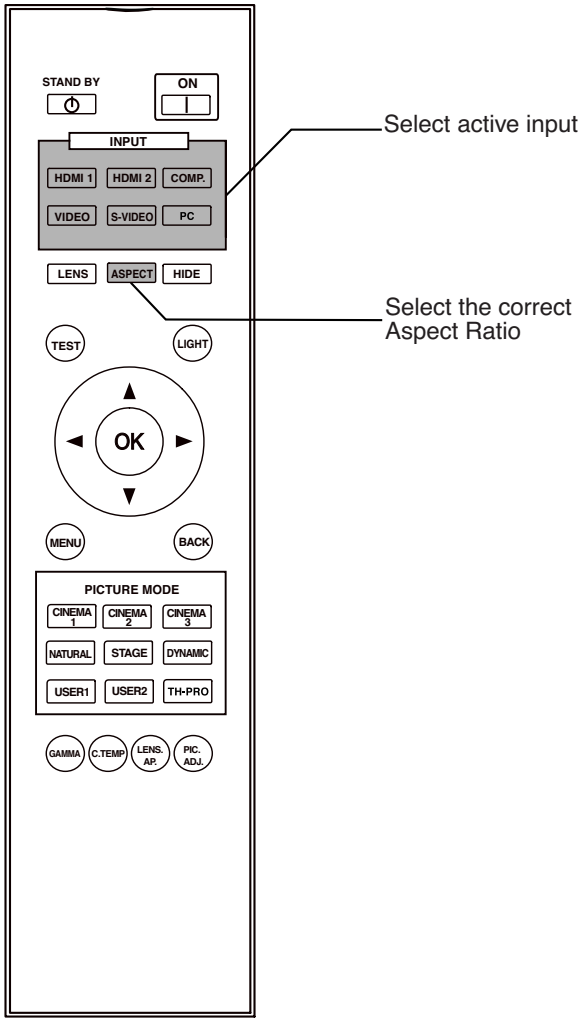


***Blackwing Four RCU and quick access to THEATRE Mode features***

### [ASPECT] ratio button

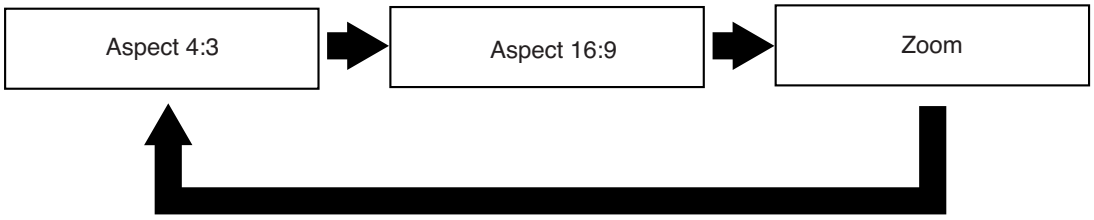


When you press sequentially the [ASPECT] button, the aspect mode rotation is 4:3, 16:9, Zoom then back to 4:3.

## 7.3 2.35 CineMax and 2.35 CineMax PRO options

### Select a 16:9 input: Aspect Ratio to “4:3”

When you select a 16:9 input, choose the “4:3” aspect mode to obtain a geometrically correct picture in your screen.

- Select “4:3” for this input into the menu “Input Signal ⇒ Aspect Ratio ⇒ “4:3””.

### Cinemascope input: set “V-Stretch -> On”

When selecting a widescreen input (2.35:1, 2.37:1 or 2.40:1), the original aspect ratio of the source is larger than 16:9, you can see black bars on the top and the bottom of the screen.

- Select “V-Stretch -> On” for this input into the menu “Input Signal ⇒ Aspect Ratio ⇒ “V-Stretch -> On””.

### Quick Aspect Ratio changes on the same input

To obtain the correct aspect ratios, choose between “V-Stretch -> On” for widescreen movies (format 2.35:1) and aspect ratio for HDTV (native format 16:9).
You can also use the Remote Control Unit by pressing the [ASPECT] button to switch between “V-Stretch -> On” to “4:3” as described below
To switch forth and backward, press twice the [ASPECT] button on the RCU as described below.

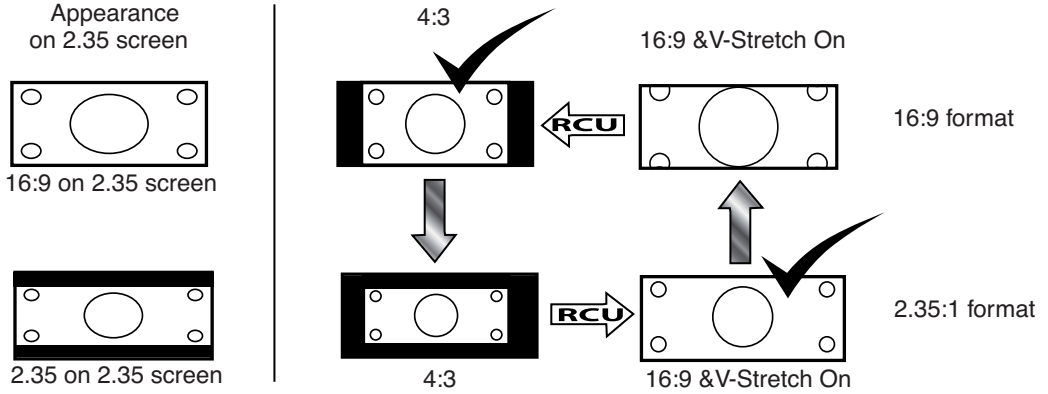


When the source automatically switches format...

... press [ASPECT] button to select 4:3 Mode or 16:9 AR and change V-Stretch value.

## 7.4 2.35 THEATER Concept

### Plug the RF-Emitter to the Trigger output of the projector

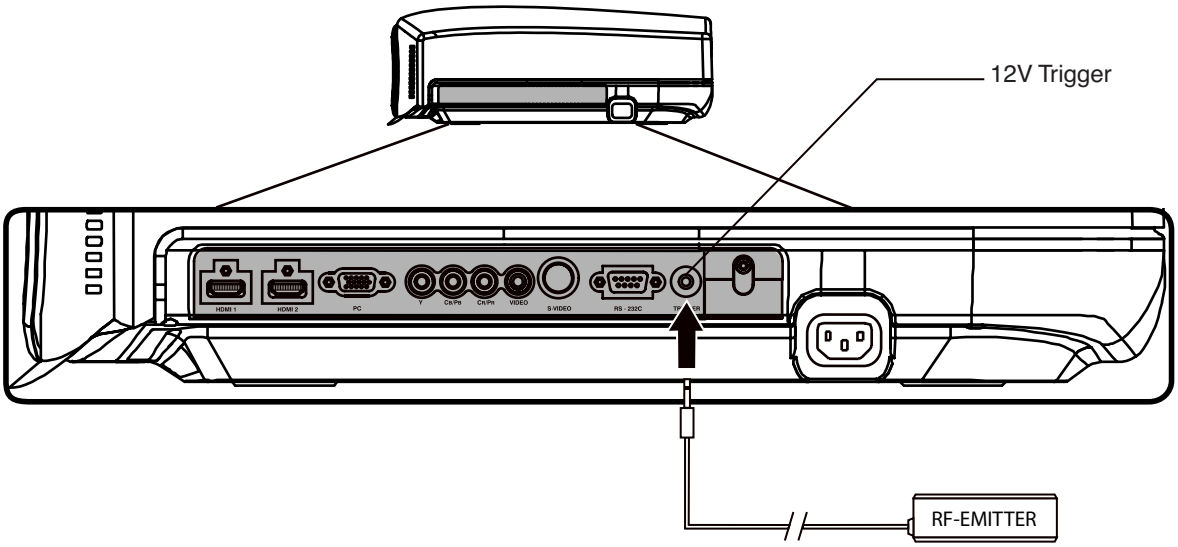


***Connect the RF-Emitter provided with the 2.35 THEATER Concept to the 12V Trigger output***

## Configure Function Menu ⇒ Trigger to “On (V-Stretch)”

The “Function ⇒ Trigger” menu determines the 12V Trigger output located in the panel input of the Blackwing Four this is a global parameter (for all inputs):

- OFF: the 12V Trigger is always switched Off.
- ON (Power): the 12V Trigger is switched On when the projector is running, Off if the projector is in standby Mode.
- ON (V-Stretch): the Trigger is Off when the V-Stretch value is Off. It switches to On when the V-Stretch value is changed to On.

## Anamorphic input: “V-Stretch -> On”

When selecting a widescreen input (2.35:1, 2.37:1 or 2.40:1), the original aspect ratio of the source is larger than 16:9, you can see black bars on the top and the bottom of the screen.

- Select “V-Stretch -> On” for this input in the menu Input Signal ⇒ “V-Stretch -> On”.

The Anamorphic Lens is automatically placed in front of the projector to restore the correct picture aspect ratio.

## Quick Aspect Ratio changes on the same input

If the Trigger setting is set to THEATRE Mode, the 2.35 THEATER Concept is automatically operated by changing the “V-Stretch -> On” or Off.

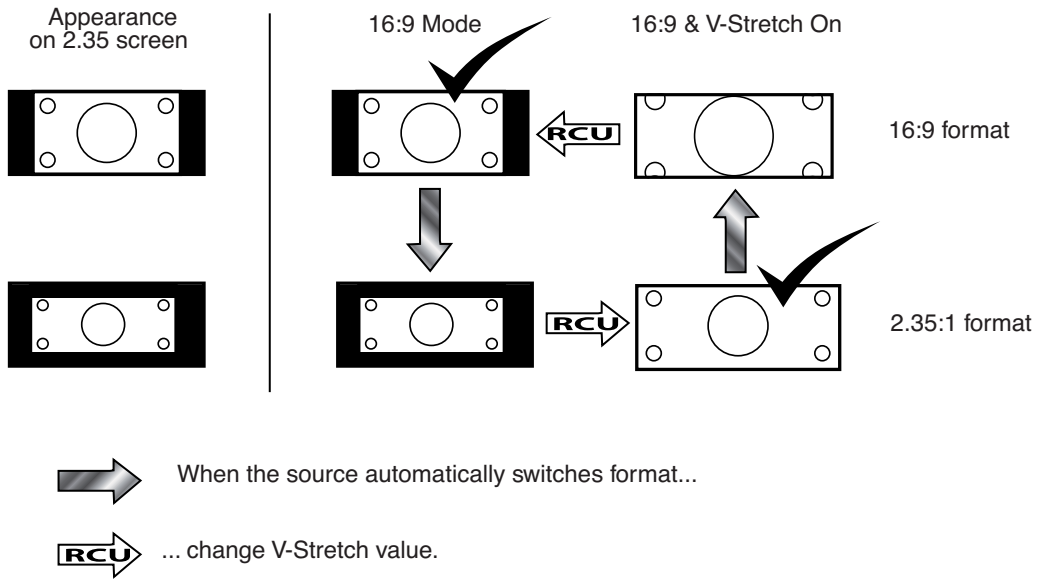

# 8.0 MAINTENANCE

## 8.1 Clean Dirt on the Cabinet

Always use a soft cloth. In case of heavy soiling, soak a cloth in neutral detergent diluted with water, wring dry and wipe, followed by wiping again using a dry cloth.

### Caution

**Pay attention to the following as the cabinet may deteriorate in condition, get damaged or paint may come off.**

- Do not wipe with a stiff cloth.
- Do not wipe with force.
- Do not wipe with thinner or benzene.
- Do not spray volatile chemicals like insecticide.
- Do not allow prolonged contact with rubber or plastic products.

## 8.2 Dirt on the Lens

The lens shall be cleaned using commercial blowers or lens cleaning papers (for cleaning glasses and cameras). Do not use fluid-type cleaning agents. This may lead to peeling of the surface coating film. The lens surface is fragile. Avoid rubbing it hard or knocking.

## 8.3 Replacing the Lamp

### Light-source Lamp and Lamp Usage Time

The life of light-source lamps used for this unit is about 3000 hours.

- The lamp life of 3000 hours is merely the average life span of light-source lamps and we do not provide any guarantee for this figure. The lamp life may not reach 3000 hours depending on the operating conditions.
  Deterioration progresses rapidly when the remaining lamp usage time is short. Get ready or replace with a new lamp when the accumulated usage time exceeds 2900 hours. Depending on the operating conditions, the lamp may have to be exchanged earlier.
  If the image is dark or color tone abnormal, replace the lamp as soon as possible.
- You can also check the accumulated hours of usage. Please refer to Lamp Time in the Information menu.

**When the lamp usage time reaches 2900 hours**

The Lamp replacement message will be displayed on the screen the next three projection starts.

- Press the [BACK] button to clear the display.

**About Lamp Replacement**

If this unit is installed in a constricted place, attempting to replace the lamp in that place may cause injury. Move this unit to a place large enough to perform work.
Use only genuine replacement parts for the lamp unit. Otherwise, malfunction may occur. Also, never attempt to re-use an old lamp unit. This may cause marked performance deterioration or lamp blowout, thus leading to unit malfunction. Broken pieces of the lamp outside this unit may also cause injuries during lamp unit exchange.
Do not replace the lamp immediately after this unit has been used. The temperature of the lamp is still high and this may cause a burn. Allow a cooling period of 1 hour or more before replacement.
Before replacing the lamp unit, pull out the power plug from the outlet and wait until the STANDBY/ON led is still light red. Replacing a lamp with the plug connected to the outlet may cause injuries or electric shocks.

### Procedure for Lamp Replacement

During the lamp replacement process, you may have access to sensitive parts of the projector.

- Loosen the 2 screws on the lamp trap.
- Open the lamp Cover, at the rear of the projector.
- Loosen the 2 screws on the lamp unit to release it.
- Pull out the lamp unit using the handle.
- Insert the new lamp unit until it is firmly in place.

- Tighten the screws of the lamp unit.
- Attach the lamp cover and fasten the two lamp trap screws.

### Resetting Lamp Time

**After installing a new lamp, reset the lamp time into the OSD menu.**

a) Insert plug into the power outlet

b) When the projector is in standby mode (red STANDBY/ON led), use the remote control and press sequentially the [BACK] - [OK] - [HIDE] within 1 second interval then [DOWN] for at least 2 seconds.

c) The sequence is successful if the STANDBY/ON and LAMP leds blink alternately for 3 seconds.

**TO ENSURE THE LAMP TIME HAS BEEN RESET**

The lamp time can be checked via the Lamp hours item of the Information menu.

**CAUTION DURING RESET WORK**

Reset the lamp time only when you have replaced the lamp.
Never reset it when the lamp is still in use. Otherwise, the approximate standard for gauging replacement time may be inaccurate, lamp performance may deteriorate and lamp blowout may occur.

## 8.4 Cleaning and Replacing the Dust Filters

**The filters must be cleaned regularly to allow an efficient air intake. Otherwise, dirt may enter the unit and appear on the screen, preventing you from enjoying the video fully. If dirt has entered the unit or if you need information about the filter, please consult your authorized dealer. A filter cleaning warning appears every 500 hours.**

### Pull out the plug from the power outlet

Pull out the power plug from the outlet while the projector is in standby mode.

### Remove the filters

Push up and lift the claw of the filters, pull out the filters.

### Clean the filters

Clean the filters with water and dry them, avoiding direct sunlight. In extremely soiled cases, use of a neutral detergent is recommended.

### Reinstall the filters

Insert the filters in their original positions and make sure that the claws are firmly inserted.

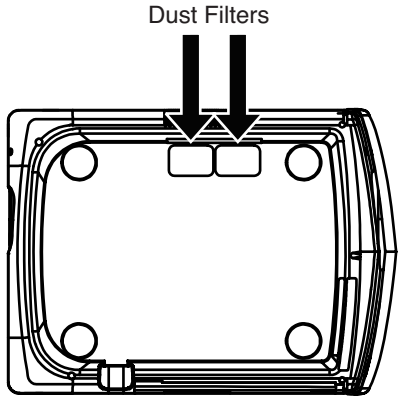


***Clean the Dust Filters every 500 hours.***

## 8.5 Troubleshooting

## Warning Led

| ID# | Operating LED | | | | Description |
|---|---|---|---|---|---|
| | STANDBY / ON | LAMP orange LED | WARNING red LED | Blinking | |
| 1 | red | - | - | - | Unit is in standby mode |
| 2 | green | - | - | - | Unit is in operate mode (during projection) |
| 3 | blinking green | - | - | Yes | Unit is in operate mode, but HIDE is ON. Press again on HIDE button to obtain a picture. |
| 4 | blinking red | - | - | Yes | Unit is in cooldown mode. (switching off) |
| 5/6 | - | orange | - | - | Lamp time has reached 2900 hours and/or prepare to replace the lamp before 3000 hours. |
| 7 | - | blinking orange | red | 1 time | The lamp failed to ignite, restart the projector after a complete cooldown cycle. |
| 8 | | | | 2 times | Lamp has shut down during projection, restart the projector after a complete cooldown cycle. |
| 9 | | | | 3 times | Lamp cover is open. Check that the lamp cover is firmly closed and restart the projector. |
| 10 | - | - | blinking red | 1 time | Power Supply failed. |
| 11 | | | | 2 times | Cooling fans stop. |
| 12 | | | | 3 times | Internal thermal sensor detects overheating. |
| 13 | | | | 4 times | External thermal sensor detects overheating. |
| 14 | - | blinking orange | | 1 time | Startup or drive circuits failed |
| 15 | | | | 2 times | Communication with drive circuit failed. |
| 16 | | | | 3 times | Scaler circuit failed |

### About Warnings and Cool-Down Mode

After projection or when a warning occurred (cases 7-16), the unit will go through a 1 minute cool-down process known as the Cool Down mode. This function is to prevent lamp breakage and shortened lamp life but also damage to the internal components of the projector.
The Cool Down mode is indicated by the blinking red STANDBY/ON led. When in Cool Down mode, the projector cannot be turned ON.
After the Cool Down process is completed, the unit will automatically switch to the Standby mode indicated by a red STANDBY/ON led.

### Caution

When in Cool Down mode, do not pull out the plug from the outlet. Also, do not block the air inlets/exhaust vents by standing the projector on its end or laying it on its side.

# 9.0 MISCELLANEOUS

## 9.1 RS-232 input and IR Codes

### Communication Specifications

Control of this unit is possible using a computer or automation device connected with a RS-232 cross cable (female - female D-sub 9 pins cable). Communication specifications for this unit are as follows:

| | |
|---|---|
| Baud Rate | 19200 bps |
| Data Format | Binary |
| Mode | Non-Synchronous |
| Character Length | 8 bits |
| Parity | None |
| Start Bit | 1 bit set to high |
| Stop Bit | 1 bit set to low |
| X on/off | None |
| Flow Control | None |

### Pin assignation

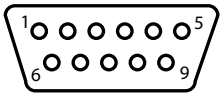


| Pin | Signal | Function | Signal Direction |
|---|---|---|---|
| 2 | RxD | data | PC -> Projector |
| 3 | TxD | data | Projector-> PC |
| 5 | GND | ground | - |
| 1,4,6-9 | N/C | - | - |

### Command Format

When sending a command to this unit, use the following data format:

| Header | Unit ID | Command | Data | EoD |
|---|---|---|---|---|
| 1 byte | 89h 01h | 2 bytes | at least 1 byte | 0Ah |

| | |
|---|---|
| **Header** | (21h): Operating command. PC -> Projector<br>(3Fh): Reference command. PC -> Projector<br>(40h): Response command. Projector -> PC<br>(06h): ACK. Projector -> PC |
| **Unit ID** | Fixed to (89 h 01h) |
| **Command** | 2 bytes. See the list of the available commands below.<br>If Command code is “52h 43h”, the Data sent may also be sent to the projector by a programmable RCU using NEC 5 protocole. |
| **Data** | 1 byte. See the list of the available data for each command below. |
| **EoD** | Fixed to (0Ah) |

### Available Operating commands

| Header (21h) | Command | Data | Description |
|---|---|---|---|
| Connection RS-232 | 00h 00h | none | Check the serial connection. |
| Power ON | 50h 57h | 31h | If the projector is in stand-by mode, this command switch the unit ON. |
| Power OFF | 50h 57h | 30h | If the projector is powered ON, this command switches this unit into Stand-by Mode. |

| | | | |
|---|---|---|---|
| Switch Input | 49h 50h | 30h | Switch active input to S-Video |
| | | 31h | Switch active input to Video |
| | | 32h | Switch active input to Component |
| | | 33h | Switch active input to VGA |
| | | 36h | Switch active input to HDMI 1 |
| | | 37h | Switch active input to HDMI 2 |
| | | 2Bh | Switch to next input |
| | | 2Dh | Switch to previous input |
| Test Pattern | 54h 53h | 30h | Test Patterns Off. |
| | | 31h | Colour bars |
| | | 36h | Stair Step (black & white) |
| | | 37h | Stair Step (red) |
| | | 38h | Stair Step (green) |
| | | 39h | Stair Step (blue) |
| | | 41h | Crosshatch (green) |
| Gamma | 47h 54h | 30h | Set Gamma to Normal |
| | | 31h | Set Gamma to A |
| | | 32h | Set Gamma to B |
| | | 33h | Set Gamma to C |
| | | 34h | Set Gamma to Custom1 |
| | | 35h | Set Gamma to Custom2 |
| | | 36h | Set Gamma to Custom3 |
| | | 37h | Set Gamma to D |
| Gamma Value (Gamma set to Custom1-3) | 47h 50h | 30h | Set value to 1.8 |
| | | 31h | Set value to 1.9 |
| | | 32h | Set value to 2.0 |
| | | 33h | Set value to 2.1 |
| | | 34h | Set value to 2.2 |
| | | 35h | Set value to 2.3 |
| | | 36h | Set value to 2.4 |
| | | 37h | Set value to 2.5 |
| | | 38h | Set value to 2.6 |

## RCU Commands and sending them through RS-232

| Header (21h) | Command | Data | Description |
|---|---|---|---|
| Power ON | 52h 43h | 37h 33h 30h 35h | Switch the unit ON. |
| Power OFF | 52h 43h | 37h 33h 30h 36h | Switch this unit into Stand-by mode. |
| Switch input | 52h 43h | 37h 33h 30h 38h | Switch to next input |
| | | 37h 33h 34h 36h | Switch active input to VGA |
| | | 37h 33h 34h 42h | Switch active input to Video |
| | | 37h 33h 34h 43h | Switch active input to S-Video |
| | | 37h 33h 34h 44h | Switch active input to Component |
| | | 37h 33h 37h 30h | Switch active input to HDMI 1 |
| | | 37h 33h 37h 31h | Switch active input to HDMI 2 |
| Keypad | 52h 43h | 37h 33h 30h 31h | UP |
| | | 37h 33h 30h 32h | DOWN |
| | | 37h 33h 30h 33h | EXIT |
| | | 37h 33h 32h 45h | MENU |
| | | 37h 33h 32h 46h | OK |
| | | 37h 33h 33h 34h | RIGHT |
| | | 37h 33h 33h 36h | LEFT |
| Hide Display | 52h 43h | 37h 33h 31h 44h | Hide the projected picture at the screen. |
| OSD Position | 52h 43h | 37h 33h 34h 32h | Menu Position: Toggle the OSD position. |
| Test Pattern | 52h 43h | 37h 33h 35h 39h | Switch Test Patterns on the screen. |

| | | | |
|---|---|---|---|
| Picture Mode | 52h 43h | 37h 33h 36h 34h | Day profile (require Expert Cal. ON) |
| | | 37h 33h 36h 35h | Night profile (require Expert Cal. ON) |
| | | 37h 33h 36h 36h | Cinema 3 |
| | | 37h 33h 36h 37h | Stage |
| | | 37h 33h 36h 38h | Cinema 2 |
| | | 37h 33h 36h 39h | Cinema 1 |
| | | 37h 33h 36h 41h | Natural |
| | | 37h 33h 36h 42h | Dynamic |
| | | 37h 33h 36h 43h | User 1 |
| | | 37h 33h 36h 44h | User 2 |
| | | 37h 33h 36h 46h | TH-PRO |
| Picture Adjust | 52h 43h | 37h 33h 37h 32h | Toggle Picture Adj. menu. |
| Gamma | 52h 43h | 37h 33h 37h 35h | Toggle Gamma function menu. |
| | | 37h 33h 33h 38h | Set Gamma to Normal |
| | | 37h 33h 33h 39h | Set Gamma to A |
| | | 37h 33h 33h 41h | Set Gamma to B |
| | | 37h 33h 33h 42h | Set Gamma to C |
| | | 37h 33h 33h 43h | Set Gamma to Custom1 |
| | | 37h 33h 33h 44h | Set Gamma to Custom2 |
| | | 37h 33h 33h 45h | Set Gamma to Custom3 |
| | | 37h 33h 33h 46h | Set Gamma to D |
| Color Temperature | 52h 43h | 37h 33h 37h 36h | Toggle Color temperature. |
| | | 37h 33h 34h 45h | Set Color Temperature to 5800K. |
| | | 37h 33h 34h 46h | Set Color Temperature to 6500K. |
| | | 37h 33h 35h 30h | Set Color Temperature to 7500K. |
| | | 37h 33h 35h 31h | Set Color Temperature to 9300K. |
| | | 37h 33h 35h 32h | Set Color Temperature to High Bright. |
| | | 37h 33h 35h 33h | Set Color Temperature to Custom1. |
| | | 37h 33h 35h 34h | Set Color Temperature to Custom2. |
| | | 37h 33h 35h 35h | Set Color Temperature to Custom3. |
| Color Management | 52h 43h | 37h 33h 36h 30h | Set Color Management to Off. |
| | | 37h 33h 36h 31h | Set Color Management to Custom1. |
| | | 37h 33h 36h 32h | Set Color Management to Custom2. |
| | | 37h 33h 36h 33h | Set Color Management to Custom3. |
| Expert Calibration | 52h 43h | 37h 33h 35h 38h | Switch to Adjust Mode. |
| | | 37h 33h 35h 39h | Switch to Test Mode. |
| | | 37h 33h 35h 41h | Switch Expert Calibration to Off. |
| | | 37h 33h 35h 42h | Switch Expert Calibration to On. |
| Aspect Ratio | 52h 43h | 37h 33h 37h 37h | Toggle Aspect Ratio. |
| | | 37h 33h 32h 35h | Set Aspect Ratio to 4:3 |
| | | 37h 33h 32h 36h | Set Aspect Ratio to 16:9 |
| | | 37h 33h 32h 37h | Set Aspect Ratio to Zoom. |
| Contrast | 52h 43h | 37h 33h 37h 38h | Contrast + |
| | | 37h 33h 37h 39h | Contrast - |
| Brightness | 52h 43h | 37h 33h 37h 41h | Brightness + |
| | | 37h 33h 37h 42h | Brightness - |
| Color | 52h 43h | 37h 33h 37h 43h | Color + |
| | | 37h 33h 37h 44h | Color - |
| Sharpness | 52h 43h | 37h 33h 37h 45h | Sharpness + |
| | | 37h 33h 37h 46h | Sharpness - |
| V-Stretch | 52h 43h | 37h 33h 32h 33h | Turn ON the V-Stretch function. |
| | | 37h 33h 32h 34h | Turn OFF the V-Stretch function. |

| | | | |
|---|---|---|---|
| Lens Aperture | 52h 43h | 37h 33h 32h 30h | Toggle the Lens Aperture setting menu. |
| | | 37h 33h 32h 38h | Set Lens Aperture to setting “1” |
| | | 37h 33h 32h 39h | Set Lens Aperture to settign “2” |
| | | 37h 33h 32h 40h | Set Lens Aperture to setting “3” |
| Lens Aperture + | 52h 43h | 37h 33h 31h 45h | Increase the Lens Aperture value |
| Lens Aperture - | 52h 43h | 37h 33h 31h 46h | Decrease the Lens Aperture value |
| V-Stretch | 52h 43h | 37h 33h 32h 33h | Turn ON the V-Stretch function. |
| | | 37h 33h 32h 34h | Turn OFF the V-Stretch function. |

Lens Control

| Header (21h) | Command | Data | Description |
|---|---|---|---|
| Lens Menu | 52h 43h | 37h 33h 33h 30h | Lens Menu: Toggle the Lens Menu. |
| Lens Shift Up | 52h 43h | 37h 33h 32h 31h | Shift the picture upward using lens shift. |
| Lens Shift Down | 52h 43h | 37h 33h 32h 32h | Shift the picture downard using lens shift. |
| Lens Shift Right | 52h 43h | 37h 33h 34h 33h | Shift the picture to the right using lens shift. |
| Lens Shift Left | 52h 43h | 37h 33h 34h 34h | Shift the picture to the left using the lens shift. |
| Lens Focus + | 52h 43h | 37h 33h 33h 31h | Focus far. |
| Lens Focus - | 52h 43h | 37h 33h 33h 32h | Focus near |
| Lens Zoom T | 52h 43h | 37h 33h 33h 35h | Zoom Tele |
| Lens Zoom W | 52h 43h | 37h 33h 33h 37h | Zoom Wide |

Examples

| You want to... | Command to send |
|---|---|
| Check the connection | send: 21h 89h 01h 00h 00h 0Ah<br>receive: 06h 89h 01h 00h 00h 0A |
| Switch the projector ON | send: 21h 89h 01h 50h 57h 31h 0Ah<br>receive: 06h 89h 01h 50h 57h 0Ah |
| Switch the projector OFF | send: 21h 89h 01h 50h 57h 30h 0Ah<br>receive: 06h 89h 01h 50h 57h 0Ah |
| Switch the projector OFF with OSD confirmation | send: 21h 89h 01h 52h 43h 37h 33h 30h 36h 0Ah<br>receive: 06h 89h 01h 52h 43h 0Ah |
| Change Active Input to Comp. | send: 21h 89h 01h 49h 50h 32h 0Ah<br>or<br>send: 21h 89h 01h 52h 43h 37h 33h 34h 44h 0Ah |
| Display On Screen Menu | send: 21h 89h 01h 52h 43h 37h 33h 32h 45h 0Ah<br>receive: 06h 89h 01h 52h 43h 0Ah |

## Available Reference and Response commands

A reference command ask the projector about its status. The projector send back an ACK command together with a Response command.

| Header | Command | Description | Response Data |
|---|---|---|---|
| Power status (header 3Fh) | 50h 57h | Check the Power status. | 30h: Standby |
| | | | 31h: Power On |
| | | | 32h: Cool Down |
| | | | 34h: Warning |
| Active Input (header 3Fh) | 49h 50h | Check which input is active. | 30h: S-video |
| | | | 31h: Video |
| | | | 32h: Component |
| | | | 33h: VGA |
| | | | 36h: HDMI 1 |
| | | | 37h: HDMI 2 |

| | | | |
|---|---|---|---|
| Gamma Table (header 3Fh) | 47h 54h | Check the current Gamma table | 30h: Normal |
| | | | 31h: A |
| | | | 32h: B |
| | | | 33h: C |
| | | | 34h: Custom1 |
| | | | 35h: Custom2 |
| | | | 36h: Custom3 |
| Gamma Value (header 3Fh) | 47h 50h | Check the current Gamma value | 30h: 1.8 |
| | | | 31h: 1.9 |
| | | | 32h: 2.0 |
| | | | 33h: 2.1 |
| | | | 34h: 2.2 |
| | | | 35h: 2.3 |
| | | | 36h: 2.4 |
| | | | 37h: 2.5 |
| | | | 38h: 2.6 |

Examples

| You want to... | Command to send |
|---|---|
| Check if the projector is switched ON | send: 3Fh 89h 01h 50h 57h 0Ah<br>receive: 06h 89h 01h 50h 57h 0Ah (confirm cmd)<br>receive: 40h 89h 01h 50h 57h 31h 0Ah (projector is ON) |
| Which input is active | send: 3Fh 89h 01h 49h 50h 0Ah<br>receive: 06h 89h 01h 49h 50h 0Ah (confirm cmd)<br>receive: 40h 89h 01h 49h 50h 36h 0Ah (HDMI 1 is active) |

## 9.2 PC compatible signals

### On HDMI Inputs

| Designation | Resolution | fh (kHz) | fv (Hz) | Dot (MHz) | Polarity | Total dots x lines |
|---|---|---|---|---|---|---|
| VGA 60 | 640 x 480 | 31.500 | 60.000 | 25.200 | H- V- | 800 x 525 |
| VGA 59.94 | 640 x 480 | 31.469 | 59.940 | 25.175 | H- V- | 800 x 525 |
| SVGA 60 | 800 x 600 | 37.879 | 60.317 | 40.000 | H+ V+ | 1056 x 628 |
| XGA 60 | 1024 x 768 | 48.363 | 60.004 | 65.000 | H- V- | 1344 x 806 |
| WXGA 60 | 1280 x 768 | 47.760 | 60.000 | 79.998 | H- V+ | 1675 x 796 |
| WXGA+ 60 | 1440 x 900 | 55.919 | 59.999 | 106.470 | H- V+ | 1904 x 932 |
| SXGA 60 | 1280 x 1024 | 63.981 | 60.020 | 108.000 | H+ V+ | 1688 x 1066 |
| WSXGA+ 60 | 1680 x 1050 | 65.222 | 60.002 | 147.140 | H- V+ | 2256 x 1087 |
| WUXGA 60 | 1920 x 1200 | 74.038 | 59.950 | 154.000 | H+ V- | 2080 x 1235 |

### On Sub-D15 (VGA) input

| Designation | Resolution | fh (kHz) | fv (Hz) | Dot (MHz) | Polarity | Total dots x lines |
|---|---|---|---|---|---|---|
| VGA 60 | 640 x 480 | 31.500 | 60.000 | 25.175 | H- V- | 800 x 525 |
| VGA 72 | 640 x 480 | 37.900 | 72.000 | 31.500 | H- V- | 832 x 520 |
| VGA 75 | 640 x 480 | 37.500 | 75.000 | 31.500 | H- V- | 840 x 500 |
| VGA 85 | 640 x 480 | 43.300 | 85.000 | 36.000 | H- V- | 832 x 509 |
| SVGA 60 | 800 x 600 | 37.900 | 60.000 | 40.000 | H+ V+ | 1056 x 628 |
| SVGA 72 | 800 x 600 | 48.100 | 72.000 | 50.000 | H+ V+ | 1040 x 666 |
| SVGA 75 | 800 x 600 | 46.900 | 75.000 | 49.500 | H+ V+ | 1056 x 625 |
| SVGA 85 | 800 x 600 | 53.700 | 85.000 | 56.250 | H+ V+ | 1048 x 631 |
| XGA 60 | 1024 x 768 | 48.400 | 60.000 | 65.000 | H- V- | 1344 x 806 |
| XGA 70 | 1024 x 768 | 56.500 | 70.000 | 75.000 | H- V- | 1328 x 806 |
| XGA 75 | 1024 x 768 | 60.023 | 75.029 | 78.750 | H+ V+ | 1312 x 800 |
| XGA 85 | 1024 x 768 | 68.700 | 85.000 | 94.500 | H+ V+ | 1376 x 808 |
| WXGA 60 | 1280 x 768 | 47.760 | 60.000 | 79.998 | H- V+ | 1675 x 796 |
| WXGA+ 60 | 1440 x 900 | 55.919 | 59.999 | 106.470 | H- V- | 1904 x 932 |

| | | | | | | |
|---|---|---|---|---|---|---|
| SXGA 60 | 1280 x 1024 | 63.981 | 60.020 | 108.000 | H+ V+ | 1688 x 1066 |
| SXGA+ 60 | 1400 x 1050 | 64.740 | 59.950 | 101.000 | H+ V+ | 1560 x 1080 |
| WSXGA+ 60 | 1680 x 1050 | 65.222 | 60.002 | 147.140 | H- V- | 2256 x 1087 |
| 1920 x 1080 60 | 1920 x 1080 | 67.500 | 60.000 | 148.500 | H+ V+ | 2200 x 1125 |
| MAC 13” | 640 x 480 | 35.000 | 66.667 | 30.240 | H- V- | 864 x 525 |
| MAC 16” | 832 x 624 | 49.107 | 75.087 | 55.000 | H- V- | 1120 x 654 |
| MAC 19” | 1024 x 768 | 60.241 | 74.927 | 80.000 | H- V- | 1328 x 804 |

## 9.3 Specifications

### Overview

The Blackwing Four uses the latest technology developed to provide the ultimate video-projection experience. LCoS (Liquid Crystal on Silicon) technology based on a reflective principle features an extremely high-definition picture and seamless color gradations.

| | | |
|---|---|---|
| **Emission Method** | | LCoS (Reflective Active Matrix Principle) |
| **Display Panel/Size** | | 0.7" LCoS panel |
| **Native Resolution** | | 3x 1920 x 1080 pixels |
| **Contrast Ratio** | | 70,000:1 |
| **Projection Lens** | | Throw Ratio 1.4:1 - 2.8:1 with 2.0x Zoom<br>Electronic zoom, focus et shift<br>Electronic aperture control |
| **Brightness** | | 900 ANSI Lumens |
| **Screen Size** | | 60" to 250" (Aspect ratio 16:9) |
| **Distance range** | | from 1,50m to 12 m |
| **Input Signals** | | |
| | **Video Input** | NTSC, NTSC 4.43, PAL-N, PAL-M, PAL60, SECAM |
| | **S-Video Input** | NTSC, NTSC 4.43, PAL-N, PAL-M, PAL60, SECAM |
| | **Component Input** | (YPbPr) 480i/p, 576i/p, 720p50/60, 1080i50/60 |
| | **VGA (Sub-D15)** | VGA@60-85Hz, SVGA@56-85Hz, XGA@60-85Hz, SXGA@60Hz, WSXGA@60Hz, 1920x1080@60Hz(H+V+) |
| | **HDMI 1 Input** | 480i/p, 576i/p, 720p50/60, 1080i50/60, 1080p24/50/60<br>VGA@60Hz, SVGA@60Hz, XGA@60Hz, WXGA@60Hz, SXGA@60Hz, WSXGA@60Hz,WUXGA@60Hz |
| | **HDMI 2 Input** | 480i/p, 576i/p, 720p50/60, 1080i50/60, 1080p24/50/60<br>VGA@60Hz, SVGA@60Hz, XGA@60Hz, WXGA@60Hz, SXGA@60Hz, WSXGA@60Hz,WUXGA@60Hz |
| **Color Management** | | Advanced color settings (primaries and secondaries saturation and range) |
| **Video processing** | | DNR, MNR, BNR |
| **Input Sync Frequency** | | |
| | **Analog Inputs** | 74.5 Mhz |
| | **Digital Inputs** | 150 Mhz |
| **Light-source Lamp** | | 250 W Ultra-high pressure mercury lamp |
| **Power Requirements** | | AC 110 V - 240 V AC, 50 Hz/60 Hz |
| **Power Consumption** | | <310W (0.7W in standby mode) |
| **Dimensions (Width x Height x Depth)** | | (Excluding feet)<br>386 x 202 x 522 mm - 15.2" x 8.0" x 20.6" |
| **Net Weight** | | approx. 15,2 Kg - 33.5 lbs |

- Design and specifications are subject to change without prior notice.
- Please note that some of the pictures and illustrations may have been abridged, enlarged or contextualized in order to aid comprehension. Images may differ from the actual product.

**3-CHIP LCoS SYSTEM**

LCoS is the abbreviation of Liquid Crystal on Silicon. The 3-Chip LCoS systems feature dedicated panels for each color channel and render seamless color graduations without any flickering or rainbow effect artifacts.

## Dimensions

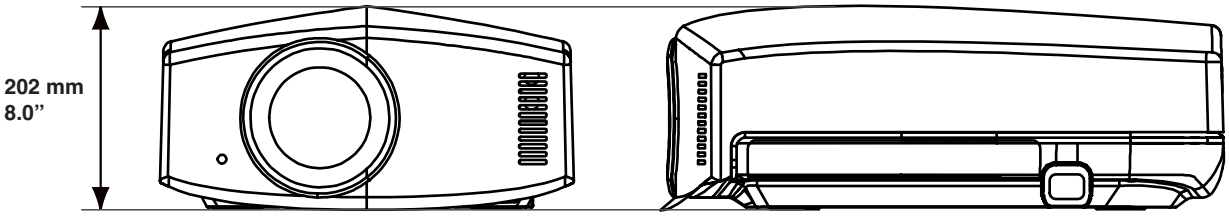


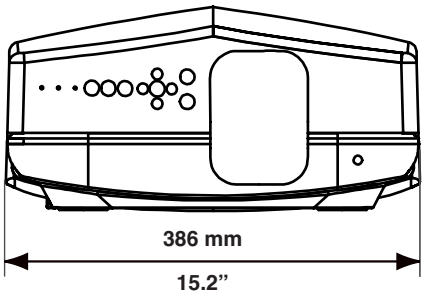


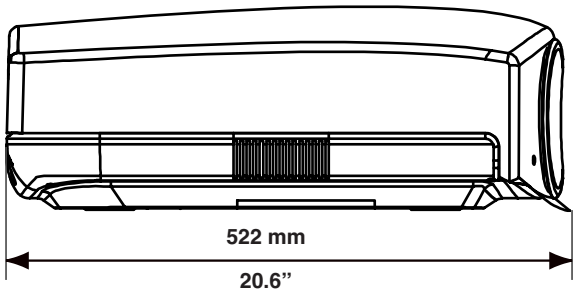


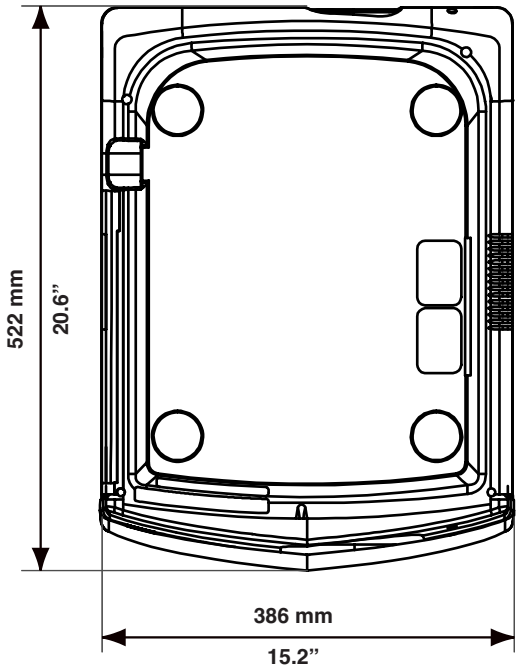


**Contact Information:**

TEC - Cineversum
7, rue La CAILLE, 75017 Paris - FRANCE
Web: www.cineversum.com

Cine VERSUM