USA's primary source for projector lamps
myprojectorlamps

PROJECTOR OWNER'S MANUAL

Barco

CINEVERSUM 60

Need a replacement lamp for this projector?

www.myprojectorlamps.com

Original manufacturer manual, provided unmodified as a courtesy of MyProjectorLamps.com.
All trademarks belong to their respective owners.

BarcoProjection

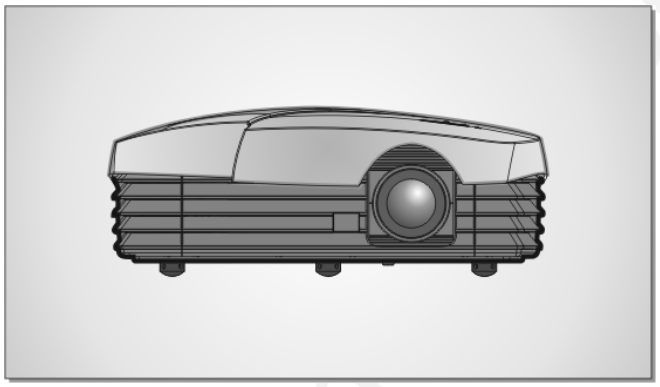

Cine VERSUM 70/60

R5976691

Owner's MANUAL

Downloaded from ctor.com

Barco nv Home Cinema

Noordlaan 5, B-8520 Kuurne

Phone: +32 56.36.84.30

Fax: +32 56.36.88.62

E-mail: salesassistantht.bci@barco.com

Downloaded from Projector.com

Copyright ©

All rights reserved. No part of this document may be copied, reproduced or translated. It shall not otherwise be recorded, transmitted or stored in a retrieval system without the prior written consent of BARCO.

Changes

Barco provides this manual 'as is' without warranty of any kind, either expressed or implied, including but not limited to the implied warranties or merchantability and fitness for a particular purpose. Barco may make improvements and/or changes to the product(s) and/or the program(s) described in this publication at any time without notice.

This publication could contain technical inaccuracies or typographical errors. Changes are periodically made to the information in this publication; these changes are incorporated in new editions of this publication.

Trademarks

Brand and product names mentioned in this manual may be trademarks, registered trademarks or copyrights of their respective holders. All brand and product names mentioned in this manual serve as comments or examples and are not to be understood as advertising for the products or their manufactures.

Federal Communication Commission (FCC Statement)

This equipment has been tested and found to comply with the limits for a Class B digital device, pursuant to Part 15 of the FCC Rules. These limits are designed to provide reasonable protection against harmful interference when the equipment is operated in a residential environment. This equipment generates, uses, and can radiate radio frequency energy and, if not installed and used in accordance with the instruction manual, may cause harmful interference to radio communications. Operation of this equipment in a residential area is likely to cause harmful interference in which case the user is encouraged to try to correct the interference by one or more of the following measures.

Introduction to the user:

If this equipment does cause interference to radio or television reception, the user may try to correct the interference by one or more of the following measures:

- Re-orientation of the receiving antenna for the radio or television.
- Relocate the equipment with respect to the receiver.
- Plug the equipment into a different outlet so that the equipment and receiver are on different branch circuits.
- Fasten cables connectors to the equipment by mounting screws.

The use of shielded cables is required within the limits of Part 15 of FCC rules and EN55022.

Guarantee and Compensation

Barco provides a guarantee relating to perfect manufacturing as part of the legally stipulated terms of guarantee. On receipt, the purchaser must immediately inspect all delivered goods for damage incurred during transport, as well as for material and manufacturing faults Barco must be informed immediately in writing of any complaints.

The period of guarantee begins on the date of transfer of risks, in the case of special systems and software on the date of commissioning, at latest 30 days after the transfer of risks. In the event of justified notice of compliant, Barco can repair the fault or provide a replacement at its own discretion within an appropriate period. If this measure proves to be impossible or unsuccessful, the purchaser can demand a reduction in the purchase price or cancellation of the contract. All other claims, in particular those relating to compensation for direct or indirect damage, and also damage attributed to the operation of software as well as to other services provided by Barco, being a component of the system or independent service, will be deemed invalid provided the damage is not proven to be attributed to the absence of properties guaranteed in writing or due to the intent or gross negligence or part of Barco.

If the purchaser or a third party carries out modifications or repairs on goods delivered by Barco, or if the goods are handled incorrectly, in particular if the systems are commissioned operated incorrectly or if, after the transfer of risks, the goods are subject to influences not agreed upon in the contract, all guarantee claims of the purchaser will be rendered invalid. Not included in the guarantee coverage are system failures which are attributed to programs or special electronic circuitry provided by the purchaser, e.g. interfaces. Normal wear as well as normal maintenance are not subject to the guarantee provided by Barco either.

The environmental conditions as well as the servicing and maintenance regulations specified in this manual must be complied with by the customer.

Downloaded from Projector.com

Downloaded from Projector.com

TABLE OF CONTENTS

1. SAFETY INSTRUCTIONS 3

1.1 General Safety Instructions 3
1.2 Projector Related Safety Information 3

2. OVERVIEW OF USER'S CONTROLS 5

2.1 Projector 5
2.2 Remote Control 5
2.3 Remote Control Operation 7
2.3.1 General 7
2.3.2 Battery Insertion in the Remote Control 8

3. MAKING CONNECTIONS 9

3.1 Removing the Connector Cover 9
3.2 Connecting Input Devices 9
3.3 Replacing the Connector Cover 11

4. SWITCHING ON/OFF THE PROJECTOR 13

4.1 Switching on the Projector 13
4.2 Switching between STANDBY and OPERATION 13
4.3 Switching Off the Projector 13

5. SOURCE SELECTION 15

5.1 Selecting a Source 15
5.2 Menu-to-connector comparison 15

6. IMAGE CONTROL 17

6.1 Brightness Control 17
6.2 Contrast Control 17
6.3 Sharpness (Detail) Control 18
6.4 Color (Saturation) Control 18
6.5 Tint Control 19
6.6 Aspect Ratio Control 19

Downloaded from Projector.com

Downloaded from Projector.com

1. SAFETY INSTRUCTIONS

Overview

- General Safety Instructions
- Projector Related Safety Instructions

This manual is intended for the user/operator of the installed projector. Any change in cabling or servicing of the installed projector must be performed by service personnel having appropriate technical training and experience necessary to be knowledgeable of potential hazards to which they are exposed in performing a task, and of measures to minimize the potential risk to themselves or other persons.

1.1 General Safety Instructions

Lightning

For added protection for this projector during a lightning storm, or when it is left unattended and unused for long periods of time, unplug it from the wall outlet and disconnect the power cord. This will prevent damage to the projector due to lightning and power-line surges.

Object and Liquid Entry

Never push objects of any kind into the modules through openings as they may touch dangerous voltage points or short-out parts that could result in a fire or electrical shock. Never spill liquid of any kind on the product.

Servicing

Do not attempt to service the modules yourself as opening or removing covers may expose you to dangerous voltage or other hazards. Refer all servicing to qualified service personnel.

Damage Requiring Servicing

Unplug the modules from the wall outlet and refer servicing to qualified service personnel under the following circumstances:

- If the power-supply cord or plug is damaged.
- If liquid has been spilled, or objects have fallen into the projector.
- If the projector has been exposed to rain or water.
- If the product exhibits a distinct change in performance, this indicates a need for service.

1.2 Projector Related Safety Information

On Cooling

The cooling fans in this projector continue to run for about 1 min. after the projector is turned off. During normal operation, when turning the power off always use the power down function on the remote control. Ensure the cooling fans have stopped before switching off the projector using the power switch.

DURING NORMAL OPERATION, NEVER TURN THE PROJECTOR OFF BY DISCONNECTING THE POWER CORD. FAILURE TO OBSERVE THIS WILL RESULT IN PREMATURE LAMP FAILURE.

Slots and Openings

Slots and openings in the cabinet and the sides are provided for ventilation; to ensure reliable operation of the projector and to protect it from overheating, these openings must not be blocked or covered.

Protection from Ultraviolet Radiation

WARNING: DO NOT LOOK DIRECTLY IN THE HIGH INTENSITY LIGHT BEAM. The lamp contained in this product is an intense source of light and heat. One component of the light emitted from the lamp is ultraviolet light.

Downloaded from Projector.com

Downloaded from Projector.com

2. OVERVIEW OF USER'S CONTROLS

Overview

- Projector
- Remote Control
- Remote Control Operation

2.1 Projector

Top View

The top side of the projector is provided with the following controls:

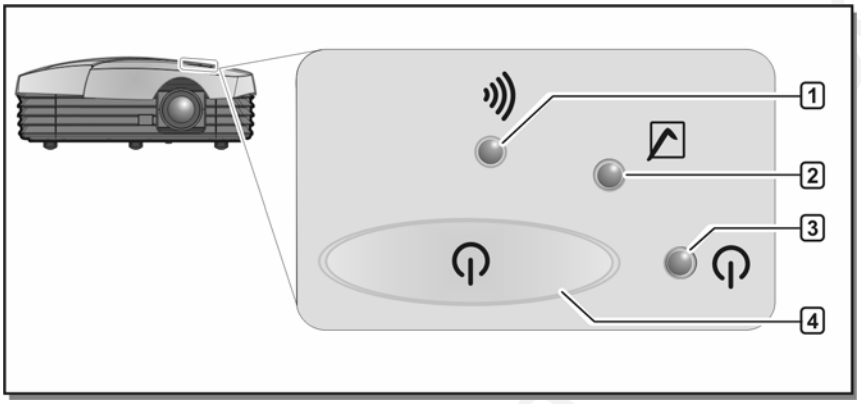

Image 2-1
Projector controls

Controls function description

Ref.	Function	Description
1	Infrared receiver	Infrared reception diode for the IR signals from the IR transmitter. Allows switching On/Off (Standby) of the projector.
2	Infrared reception LED indicator	Lights up when a valid IR signal from the remote control has been captured.
3	Standby LED	Lights up continuously: projector in operation mode. Lights up repeatedly 2 times short, 1 time long, off: projector in standby mode. Blinks fast: projector in cooling down mode after switching off (duration 1 min.). Lights up repeatedly 1 time long, 1 time short, off: projector has been started up in cooling down mode, waiting for lamp ignition.
4	Main power switch	Button pressed, switches the projector in 'standby' mode. This mode is indicated by the standby LED which lights up repeatedly 2 times short, 1 time long, off.

Table 2-1

2.2 Remote Control

Top side

The Infrared remote control buttons support the following functionality:

Buttons that are not labeled in the following remote control illustration have no function.

Downloaded from projector.com

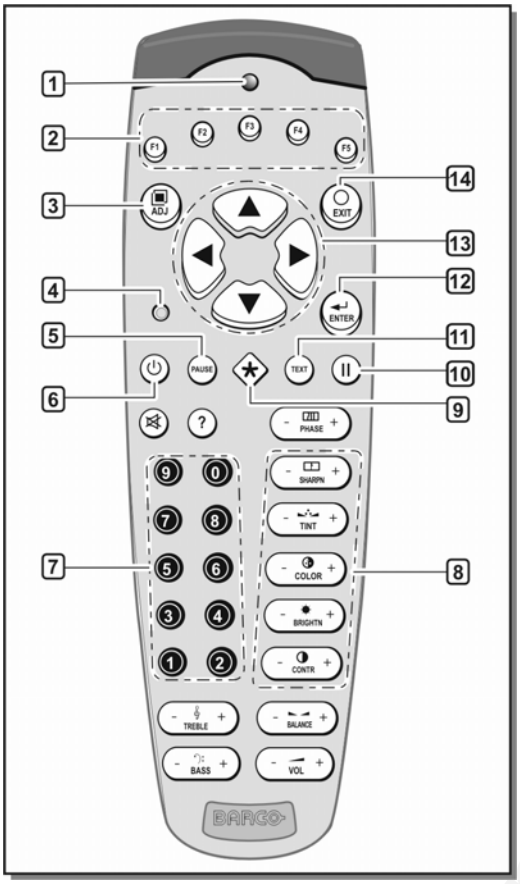

Image 2-2
Remote control

Ref.	Function	Description
1	Remote control operation indication	Lights up when a button on the remote control is pressed (Visual indication of remote control operation – Battery check).
2	F1-5 buttons	Activate PIP functions. (Not available on all models.)
3	ADJ (Adjust button)	Toggle button to enter or exit the adjustment mode.
4	N/A	Service function only.
5	PAUSE	Press to stop the image projection, press again to restart.
6	Standby button	To power up/down the projector.
7	Digit buttons	Allow direct input selection in Menus.
8	Picture controls	Allow optimization of picture reproduction.
9	Aspect ratio button	Press to scroll through aspect ratio (width-to-height) settings of projected image.
10	FREEZE	Press to freeze the image.
11	TEXT	Press to remove bar scale display when adjusting picture. (Handy when adjusting picture during a meeting.) Press button again for re-activation.
12	ENTER	Press to start the adjustment mode, confirm an adjustment or selection in the adjustment mode. Press again to leave the adjustment mode.
13	Cursor buttons	Allow menu selections in the adjustment mode.
14	EXIT	Press to leave the adjustment mode via scrolling upwards in the menu structure.

Table 2-2

Downloaded from Projector.com

2.3 Remote Control Operation

Overview

- General
- Battery Insertion in the remote control
- Visualization of Commands

2.3.1 General

How to use

This remote control includes a battery powered infrared transmitter which allows the user to control the projector remotely via its own built-in infrared receiver.

When operating the remote control unit, point it at any of the remote sensors, located on the front, front top, and rear of the projector. The remote control unit is operable up to 9 meters from the unit and within a 45-degree angle on each side of the sensor (image 2-3).

The signal from the remote control can be reflected off a screen for easy operation. However, the effective distance of the signal may differ due to the screen material.

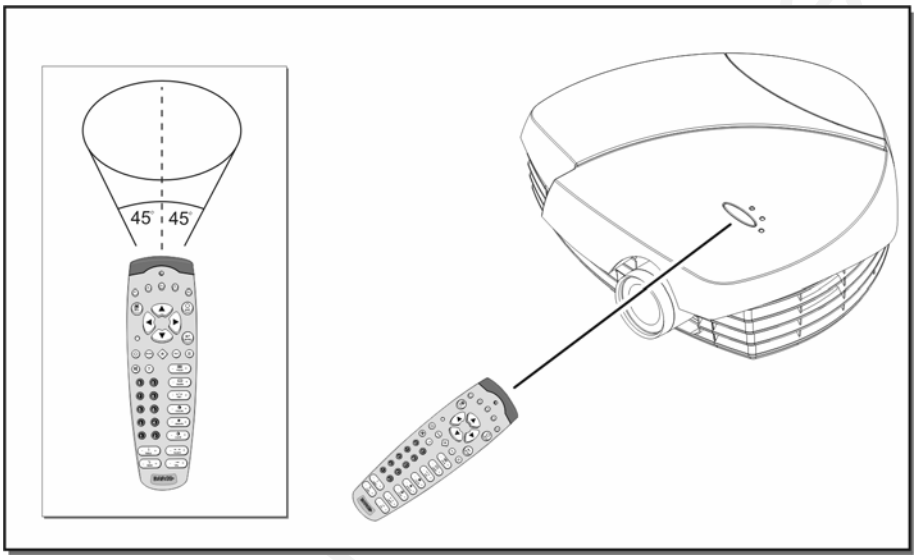

Image 2-3
Remote control operating range

Backlighting

When a button on the remote control is pressed, backlight is activated automatically. That allows the user to operate the remote control in a dark room. Backlight is turned off automatically a few seconds after the last key activation.

If the backlight and remote control operation indicator light up too long or continuously, the batteries need to be replaced.

Downloaded from Projector.com

2.3.2 Battery Insertion in the Remote Control

Where to find the batteries

The batteries are not placed in the remote control to avoid remote control operation in its package, resulting in a shorter battery life time.

How to install the batteries

1 Push the cover tab (A) with the fingernail a little backwards and pull upwards the cover top (B). (Image 2-4)

2 Lift the cover forwards to remove (image 2-5).

3 Push the battery body towards the spring and lift it up to remove (image 2-6).

4 Insert two AA size batteries, making sure the polarities match the + and – marks inside the battery compartment (image 2-6).

5 Insert the lower tab of the battery cover in the gap at the bottom of the remote control, and press the cover until it clicks in place (image 2-6).

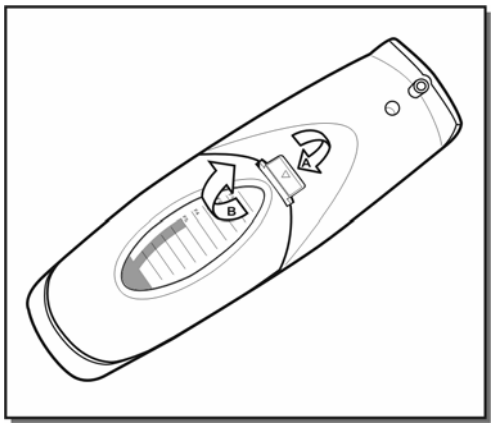

Image 2-4
Battery cover unlock

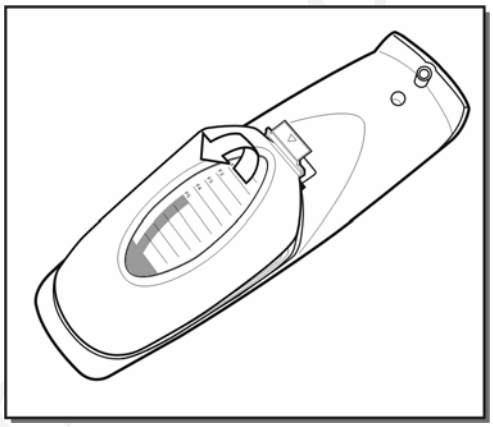

Image 2-5
Battery cover removal

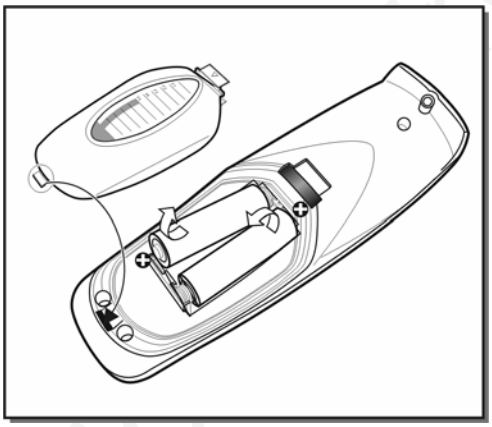

Image 2-6
Battery replacement

3. MAKING CONNECTIONS

Overview

- Removing the connector cover
- Connecting input devices
- Replacing the connector cover

3.1 Removing the Connector Cover

Before you can connect the power cord and input devices to the projector, the connector cover must me removed.

How to remove the connector cover

1 Loosen the captive screw (image 3-1).

2 Lift up at the bottom firmly and “snap” the cover loose (image 3-2).
The cover makes a loud “snap” when removed: this is normal and does not damage the cover.

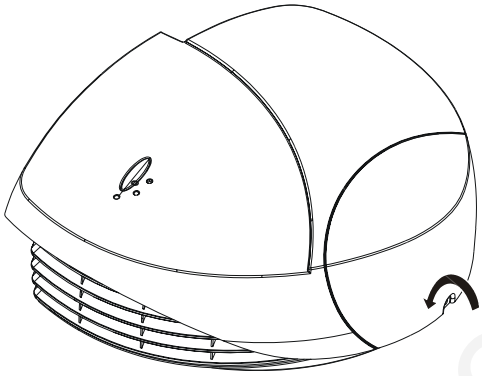

Image 3-1
Connector cover unlock

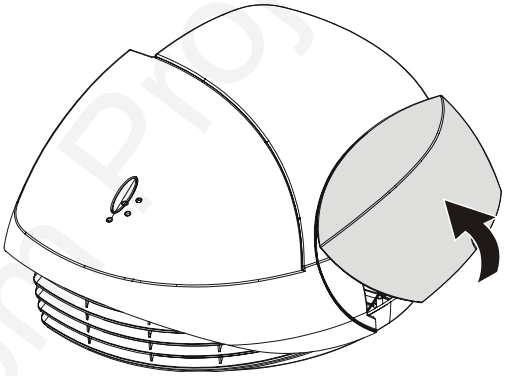

Image 3-2
Connector cover removal

3.2 Connecting Input Devices

Various video devices and a PC or notebook computer can be connected to the projector at the same time. Video devices include DVD, VCD, and VHS players, as well as movie camcorders and digital still cameras. Check the user manual of the connecting device to confirm it has the appropriate output connector.

Component versus composite video

In component video the term component describes a number of elements that are needed to make up the video picture; these components are PR/Y/PB. A composite video signal on the other hand contains all the information needed for the color picture in a single channel of information.

Downloaded from Projector.com

Connector View

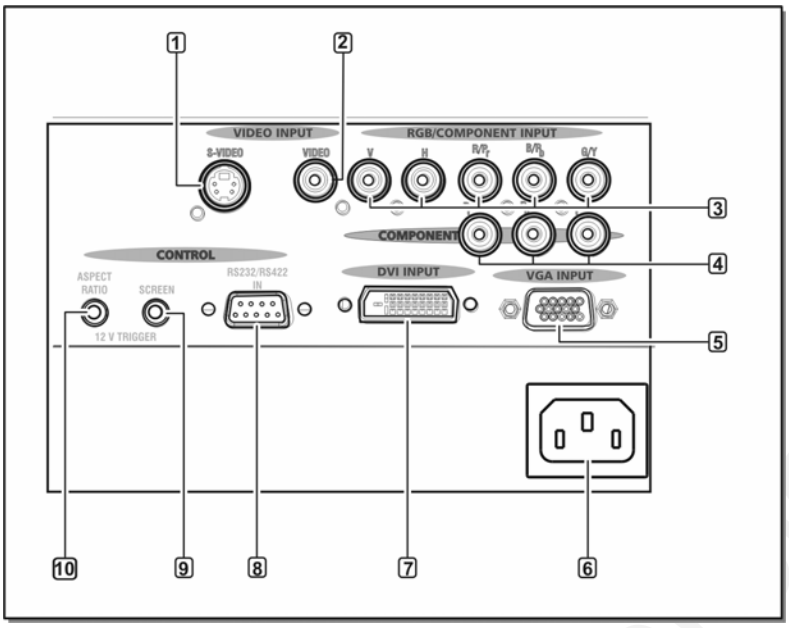

Image 3-3
Connectors and power plug

Ref.	Function	Description
1	S-video	Connect an S-video cable from the S-video out connector on the video device to this connector.
2	Video (composite)	Connect a composite video cable from the video (composite) out connector on the video device to this connector.
3	RGBHV (5-cable)	Connect a 5-cable RGB cable from the video (component) out connectors on the video device to these connectors.
	RG_SB (sync on green)	
	RGBS (SCART)	
	P_pYP_b	
4	P_pYP_b (component)	Connect an RGB cable from the video (component) out connectors on the video device to these connectors.
5	VGA input	Connect a VGA (analog) cable from a computer to this connector.
6	Power	Connect the female connector of the supplied power cable to this connector. Connect the other end to an electrical outlet only after you have finished all other connections and replaced the connector cover.
7	DVI input	Connect a DVI (digital) cable from a computer or video source to this connector.
8	RS232/RS422 in	This is a service port for firmware upgrades or RS232 control of the projector.
9	Screen	Connect a 12-volt trigger cable from the screen to this connector. When connected, the screen automatically adjusts vertically to match the screen aspect ratio.
10	Aspect ratio	Connect a 12-volt trigger cable from the screen to this connector. When connected, the screen automatically adjusts horizontally to match the screen aspect ratio.

Table 3-1

Aspect ratio

The screen aspect ratio is the ratio of width to height. The standard aspect ratio of TV set is 4:3. The high-definition TV (HDTV) format is 16:9. The projector's screen and aspect ratio feature automatically adjusts the screen size to match the output ratio from the projector.

Downloaded from Projector.com

3.3 Replacing the Connector Cover

After connecting the power cord and input devices to the projector, the connector cover should be replaced.

How to replace the connector cover

1 Insert the cover brackets first, and then push down firmly until the cover “snaps” back into place (image 3-5).

2 Tighten the captive screw (image 3-5).

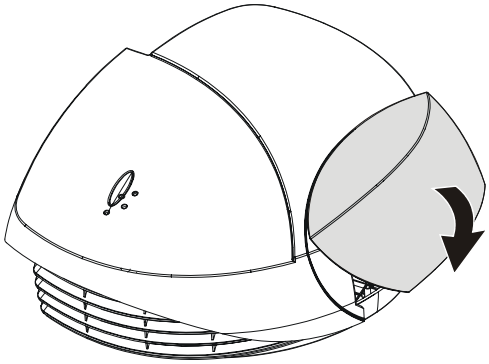

Image 3-4
Connector cover replace

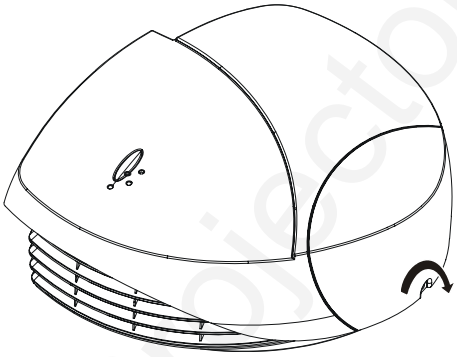

Image 3-5
Connector cover lock

Downloaded from Projector.com

Downloaded from Projector.com

4. SWITCHING ON/OFF THE PROJECTOR

Overview

- Switching on the projector
- Switching between STANDBY and OPERATION
- Switching off the projector

4.1 Switching on the Projector

How to switch on

Press the main power switch on the projector.

The projector goes from OFF to STANDBY, visualized by blinking of the standby LED.

4.2 Switching between STANDBY and OPERATION

How to switch between STANDBY and OPERATION

1 Press the Standby button on the remote control to switch the projector to OPERATION.

2 Press Standby on the remote control to return the projector to STANDBY.

4.3 Switching Off the Projector

How to switch off

1 Press the Standby button on the remote control for 2 seconds.

2 Let the projector cool down for at least 15 minutes.

3 Press the power switch on the projector.

Downloaded from Projector.com

Downloaded from Projector.com

5. SOURCE SELECTION

Overview

- Selecting a source
- Menu-to-connector comparison

5.1 Selecting a Source

More than one input device can be connected to the projector at the same time. The source selection menu allows you to select the input source.

How to select a source

1 Press **ADJ** to open the main menu.

2 Press ↑ or ↓ (up/down buttons on the remote control) to scroll through the menu and select a source (image 5-1). (Or press the equivalent number on the remote control.)

3 Press **ENTER** to confirm your choice.

Image 5-1
Main menu

5.2 Menu-to-connector comparison

The input source that you select from the main menu corresponds directly to one of the connectors on the projector, and to the input device connected to that connector (image 5-2).

Download from Projector.com

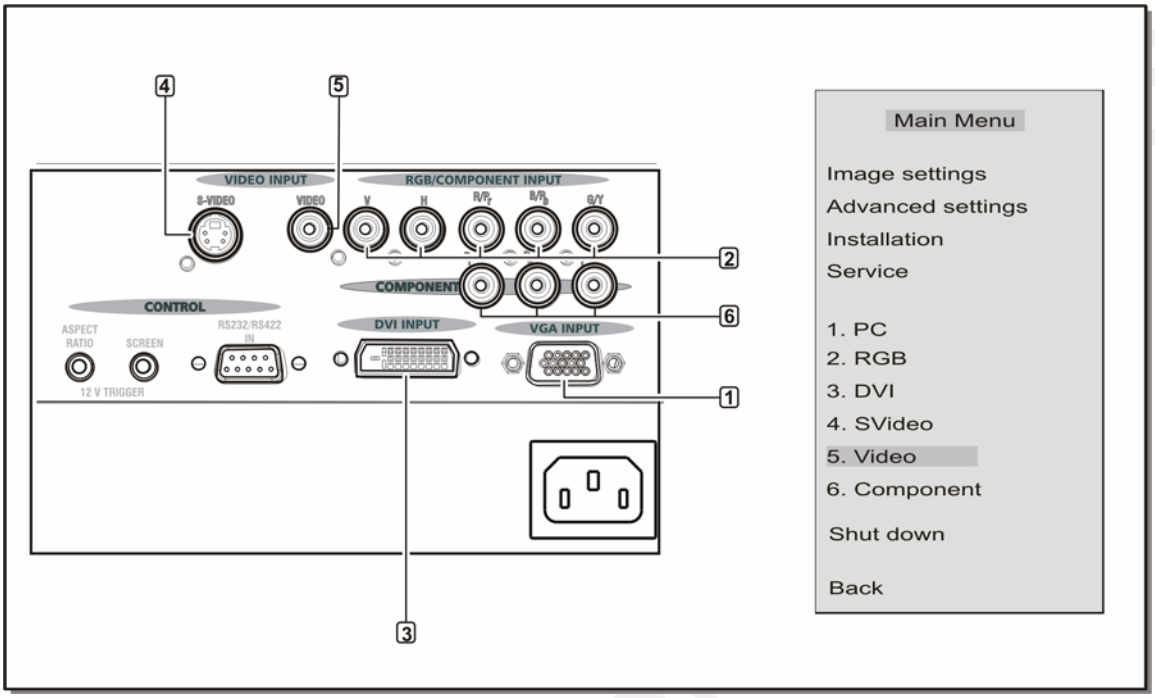

Image 5-2
Menu-to-connector comparison

Downloaded from Pr

6. IMAGE CONTROL

Image controls

The Brightness, Contrast, Sharpness (Detail), Color and Tint (Hue) functions are accessed directly from the remote control.

The adjustment functions, when selected, display a slide bar overlayed on the source image (only if text is On).

It is useful to adjust the Brightness whenever the ambient room lighting changes. The same is true for Contrast. For best results, change the Brightness, then the Contrast.

6.1 Brightness Control

How to adjust the Brightness

The Brightness function is used to adjust the overall light output. To adjust the Brightness, press the **(-)** or **(+)** side of the '**BRIGHTN**' button (image 6-1).

The following barscale is overlayed on the source image (image 6-2).

Press the **(+)** button for a brighter image or the **(-)** button for a darker image.

If video or data is displayed with a black background, adjust until the background just appears (black becomes a very dark grey).

Image 6-1

Image 6-2

6.2 Contrast Control

How to adjust the Contrast

The Contrast function is used to adjust the contrast between the light and dark areas of the displayed image.

To adjust Contrast, press the **(-)** or **(+)** side of the '**CONTR**' button (image 6-3). The following barscale is overlayed on the source image (image 6-4).

Press the **(+)** or **(-)** button until dark parts of the image show good detail.

If Contrast is set too light, the image loses detail and clarity. If set too low, it may be difficult to distinguish between foreground and background information.

Downloaded from Projector.com

Image 6-3

Image 6-4

6.3 Sharpness (Detail) Control

How to adjust the Sharpness

The Sharpness function is used to adjust the image sharpness of video signals when using a video decoder installed in the projector.

To adjust the Sharpness, press the **(-)** or **(+)** side of the '**SHARPN**' button (image 6-5). The following barscale is overlayed on the source image (image 6-6).

Press the **(+)** or **(-)** button until the sharpest display is attained. Detail level should be roughly proportional to the input signal quality.

Higher levels of detail improve good quality levels. Low levels of detail reduce noise in poor quality signals.

Image 6-5

Image 6-6

6.4 Color (Saturation) Control

How to adjust the Color (saturation)

The Color function is used to adjust color saturation levels and is only active for Video and S-Video sources.

To adjust Color, press the **(-)** or **(+)** side of the '**COLOR**' button (image 6-7). The following barscale is overlayed on the source image (image 6-8).

Press the **(+)** or **(-)** button until the desired color saturation level is displayed. If the color is set to a 0% level, the result will be black and white picture. If the color is set too high, the color levels in the image will be over-powering.

Downloaded from Projecta.com

Image 6-7

Image 6-8

6.5 Tint Control

How to adjust the Tint (hue)

The Tint function is used to adjust color hue to obtain true color reproduction and is only active for Video and S-Video when using the NTSC 4.43 or NTSC 3.58 color system.

To adjust Tint, press the **(-)** or **(+)** side of the '**TINT**' button (image 6-9). The following barscale is overlayed on the source image (image 6-10).

Press the **(+)** or **(-)** button until an optimal display is obtained. It is best to adjust tint while displaying an image with natural flesh tones.

Image 6-9

Image 6-10

6.6 Aspect Ratio Control

How to adjust the Aspect Ratio

This function allows you to modify or customize the image display mode to enhance the input image.

1 Press ***** on the remote control (image 6-11) to open the Aspect ratio menu.

The Aspect ratio menu appears on the screen including all available aspect ratios (image 6-12).

Explanation

Aspect Ratio	Description
Fit	Forces format of all input signals into the native panel resolution.
16:9	Wide screen television format/Anamorphic format.

Downloaded from Projector.com

Aspect Ratio	Description
4:3	Standard television format
5:4	Workstations format.
2.35:1	Panavision or Cinemascope format, frequently used by Hollywood films.
1.88:1	Film format used by a lot of non-action films.
1.78:1	Wide screen television format/Anamorphic format.
Letterbox	Forces the letter format of the input signal into the native panel resolution.

2 Press * to scroll through the available options.

3 Press **ENTER** to confirm your selection.

Image of the input signal is displayed in the selected format. If item FIT is selected, then the image format of the selected input source is forced into the native panel resolution, with or without loss of image contents (image 6-13).

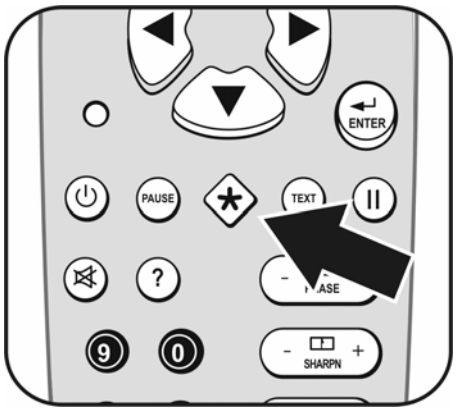

Image 6-11

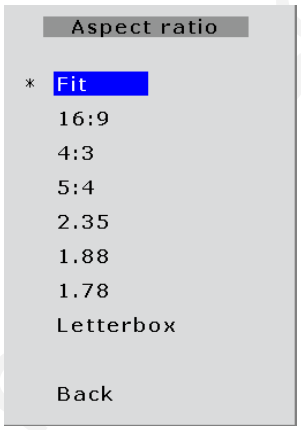

Image 6-12

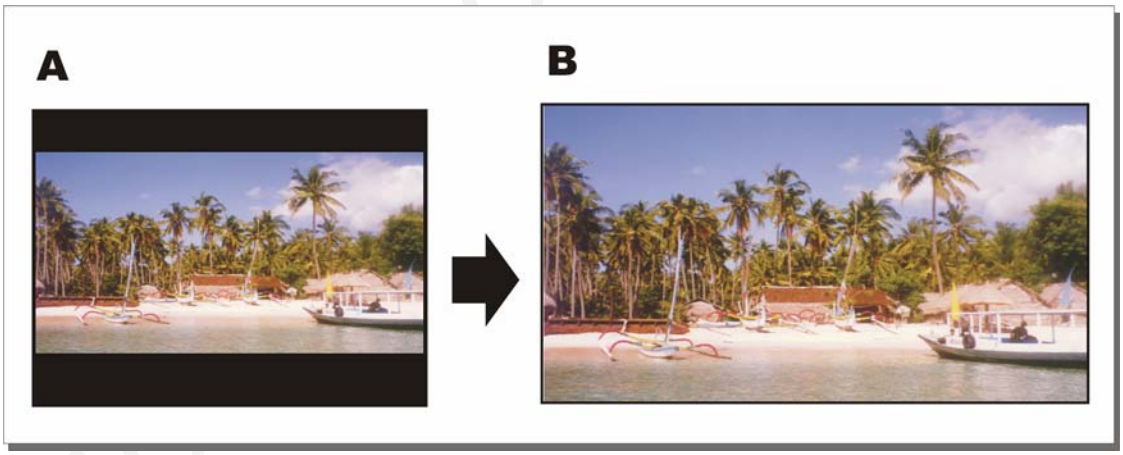

Image 6-13
A Letterbox format input signal
B Conversion to native panel resolution