USA's primary source for projector lamps
myprojectorlamps

PROJECTOR OWNER'S MANUAL

Acer

SL 700X-S PAGE2

Need a replacement lamp for this projector?

www.myprojectorlamps.com

Original manufacturer manual, provided unmodified as a courtesy of MyProjectorLamps.com.
All trademarks belong to their respective owners.

Remote Control Description

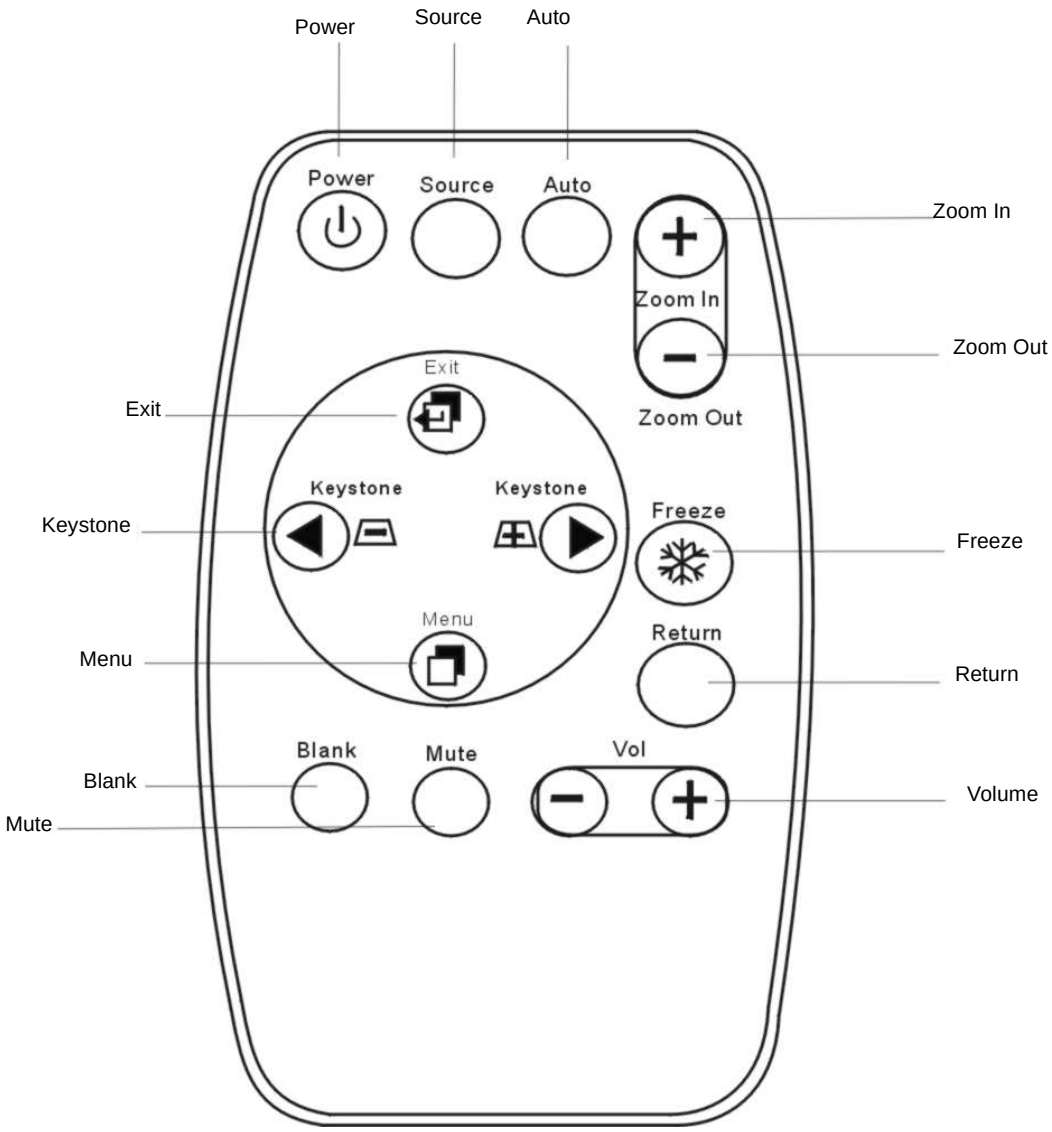

Remote Control Features

The remote control sensors are located in the front/ back of the projector. The distance between the sensor and the remote control should not excede 6 meters.

FREEZE

The image can be frozen when FREEZE is pressed. A “Pause” icon will appear in the lower right corner of the screen for three seconds. To release the freeze function, press the FREEZE button, RETURN button or SOURCE button (when the input source is switched over during display). A “Play” icon will appear in the lower right corner of the screen for three seconds when the freeze function is released. .

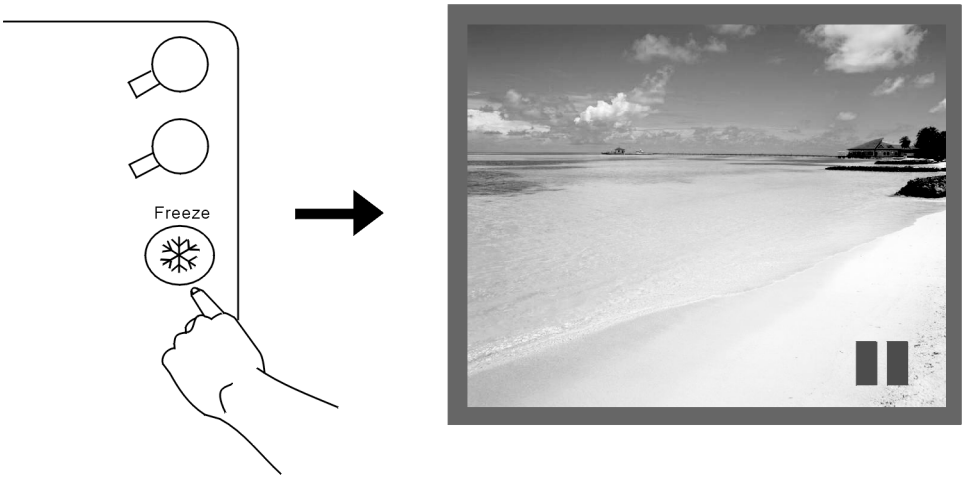

ZOOM IN/OUT

By pressing ZOOM IN +, the center of the picture can be magnified. When the **+** button is pressed again, the picture is further magnified, up to four times the original size. By pressing ZOOM OUT -, the size of the image is reduced. When the **-** button is pressed again, the picture is further reduced until it is restored to its original size. To return to the normal display mode, press the RETURN button. (This function can be used in combination with FREEZE.)

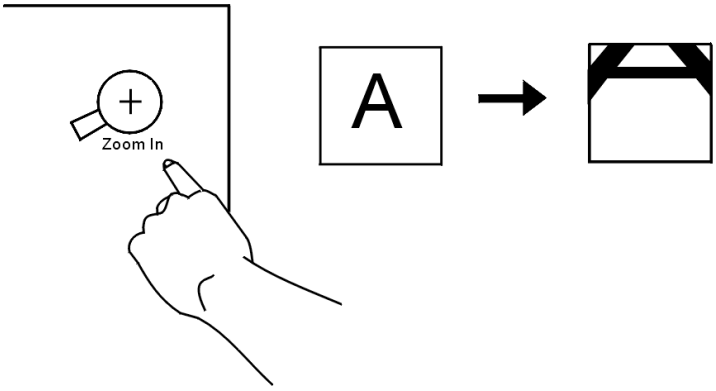

Installing or Replacing Batteries

- Push and slide the battery compartment lid in the direction shown.
- Install CR2025 as indicated by the diagram inside the compartment.
- Position the lid over the compartment and snap it back into place.

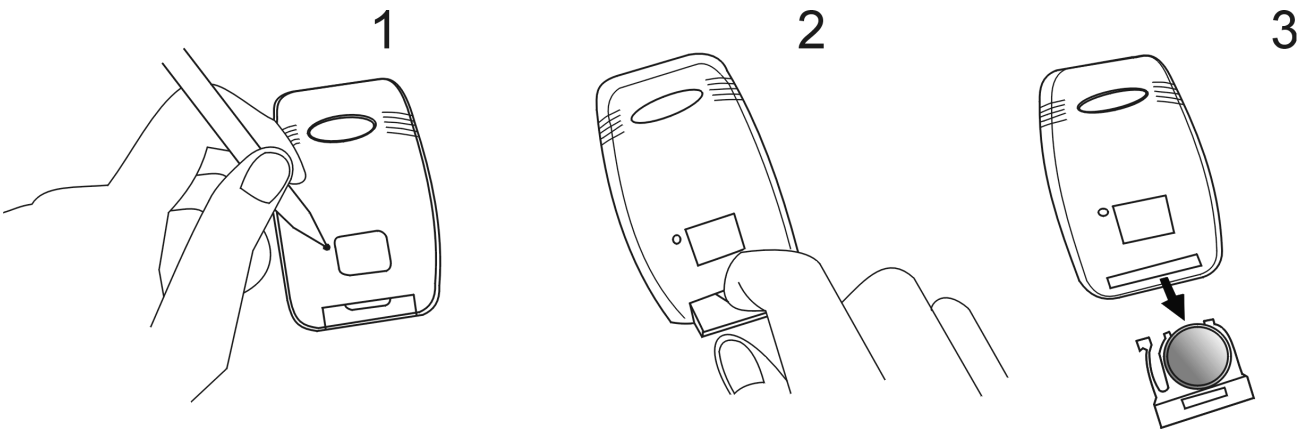

⚠ Caution

Avoid excessive heat and humidity. Danger of explosion if battery is incorrectly replaced. Replace only with the same or equivalent type recommended by the manufacturer. Dispose of used batteries according to the manufacturer's instructions.

INSTALLATION

Screen Size

Place the projector at the required distance from the screen according to the desired picture size (see the table below).

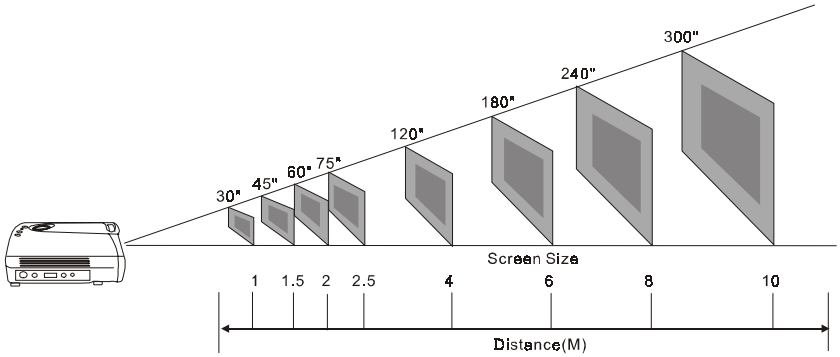

Max.Zoom	30"	45"	60"	75"	90"	120"	150"	180"	210"	240"	270"	300"
Distance(m)	1	1.5	2	2.5	3	4	5	6	7	8	9	10

Connecting to Various Equipment

It only takes a few seconds to connect your SL700 Series projector to your computer/notebook, VCR or other systems. However, a Mac adapter (an optional accessory) is needed for connection for Macintosh users.

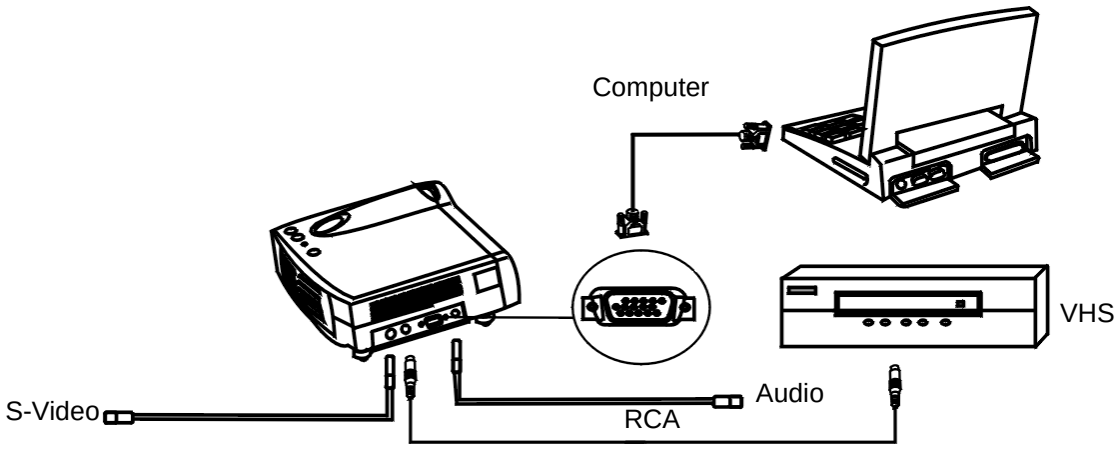

OPERATION

Start Up

1. Plug the power cord into a wall socket.
2. Press POWER for 1 second.

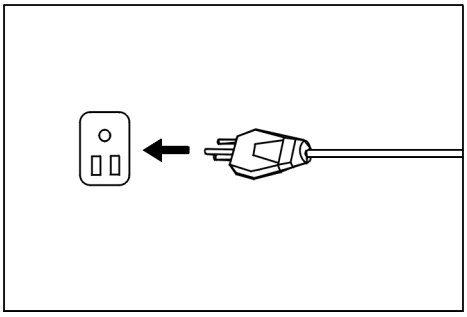

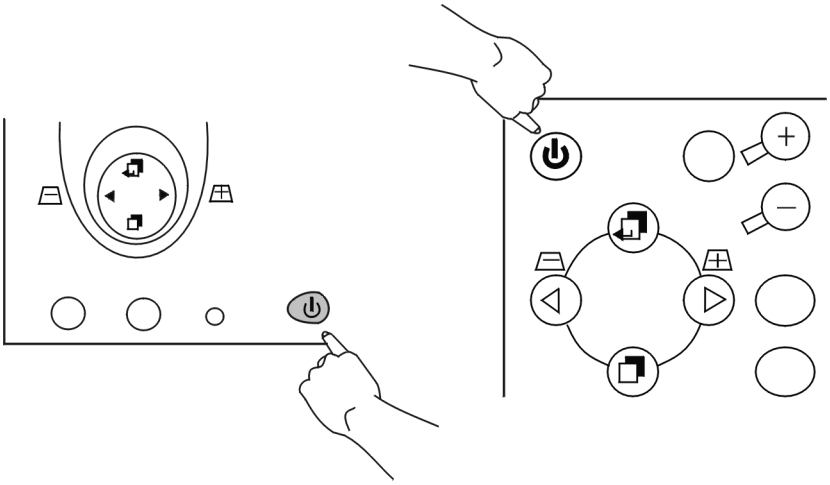

- The back-lit POWER key blinks green and stays green when the power is turned on.
  (When the power is turned off, there is a 60-second cooling period before the projector can be re-started.)

3. Switch on all connected equipment.

Digital Keystone Correction

Keystoning is when the projected image is noticeably wider on either the top or bottom. To correct this, press KEYSTONE +/- (hot key) on the control panel of the projector or on the remote control, then adjust the sliding bar labeled Keystone, as needed. Press **+** to correct keystoning at the top of the image. Press **-** to correct keystoning at the bottom of the image.

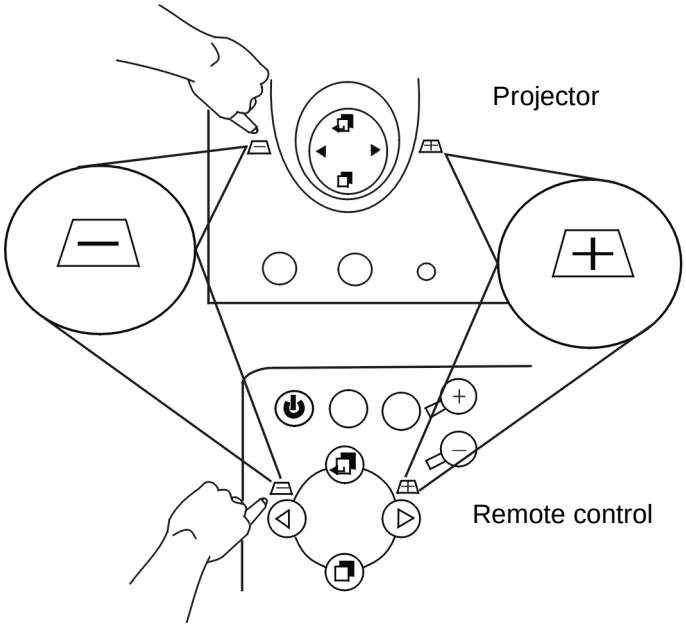

Auto Adjustment

In some cases, you may have to optimize the picture quality manually. To do this, press the AUTO key on the control panel of the projector or on the remote control. Within 3 seconds, the built-in Intelligent Auto Adjustment function of the Acer SL700X/S Series will present you the best picture quality.

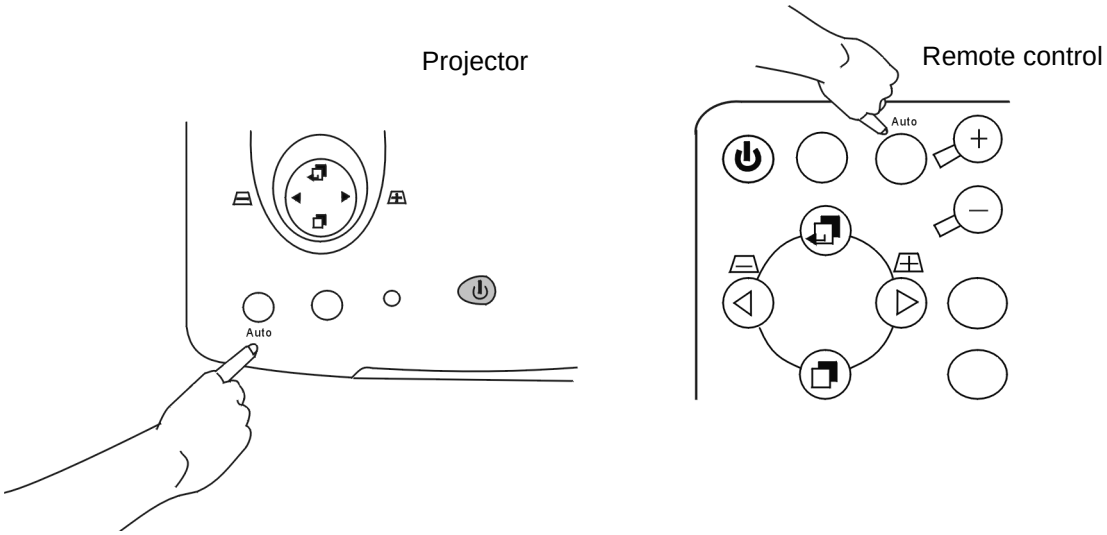

Source Selection

When several input sources are available, press the SOURCE key to make a selection from the control panel of the projector or the remote control.

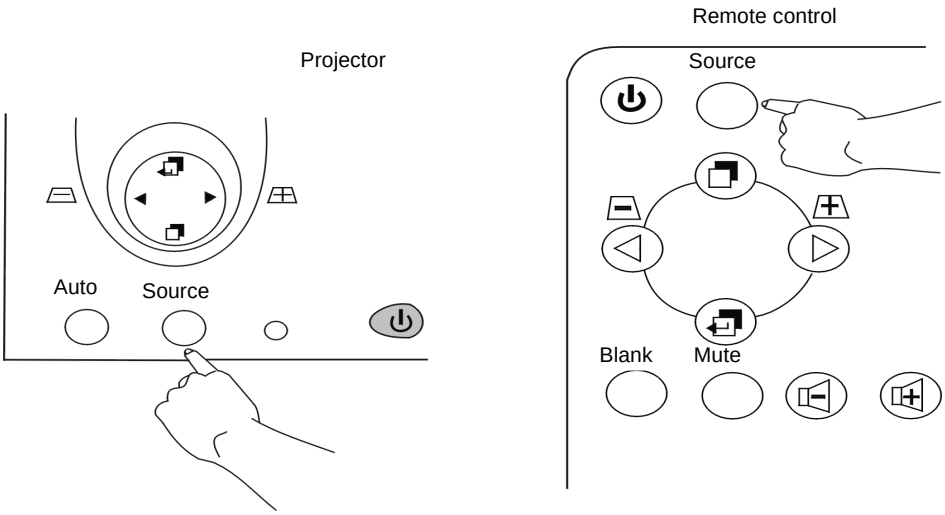

Menu System

Press **Menu** for the main menu and press ◀ or ▶ to select a sub-menu. Press **Menu** again to select items in the sub-menu.

Menu Bar				
Sub-menu	**Display**	**Image**	**Control**	**Source**
PC input without AV Input	Keystone Brightness Contrast Color Balance	Auto resize Phase Frequency H-position V-position	Language Mirror Auto off Reset	Source Volume Tremble Bass Mute
Video Input	Keystone Brightness Contrast Sharpness	Image Ratio System Color Tint	Language Mirror Auto off Reset	Source Volume Tremble Bass Mute

1. Display Menu

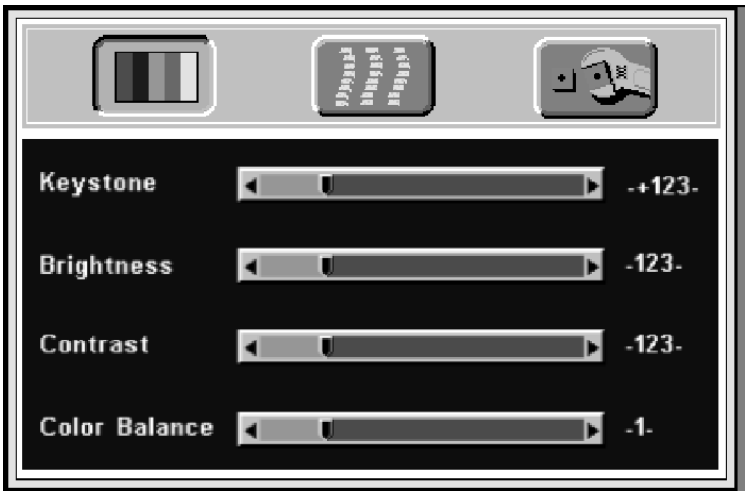

Keystone

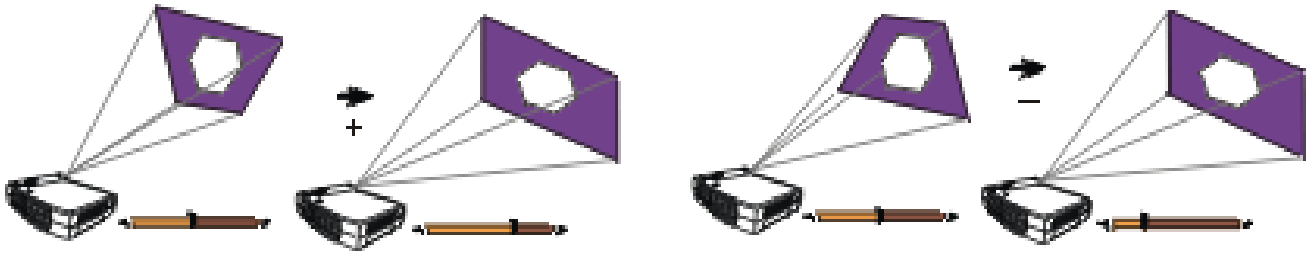

Brightness

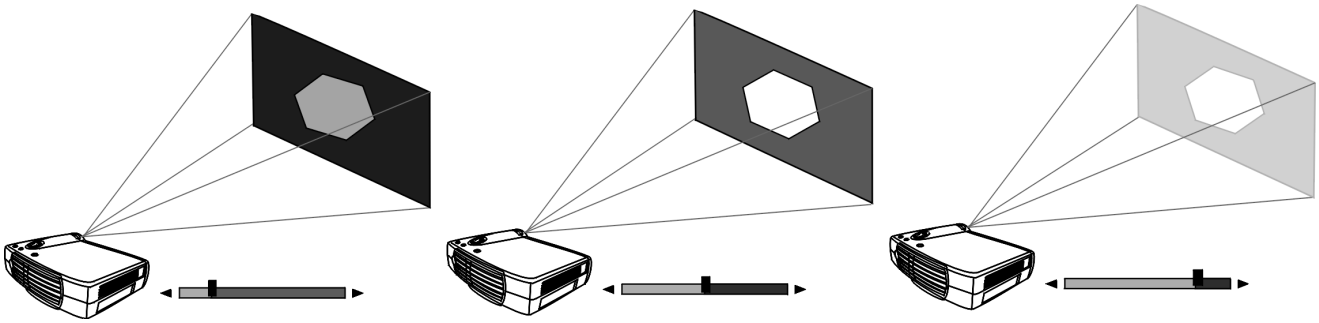

Contrast

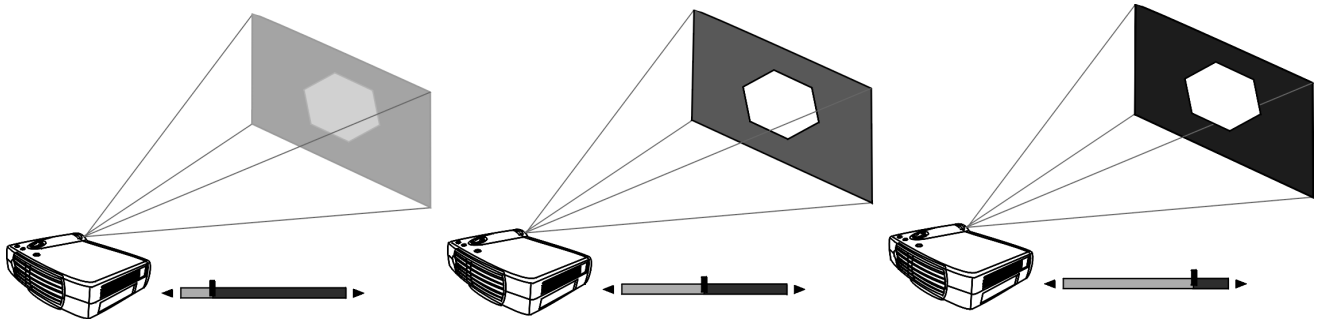

Color Balance

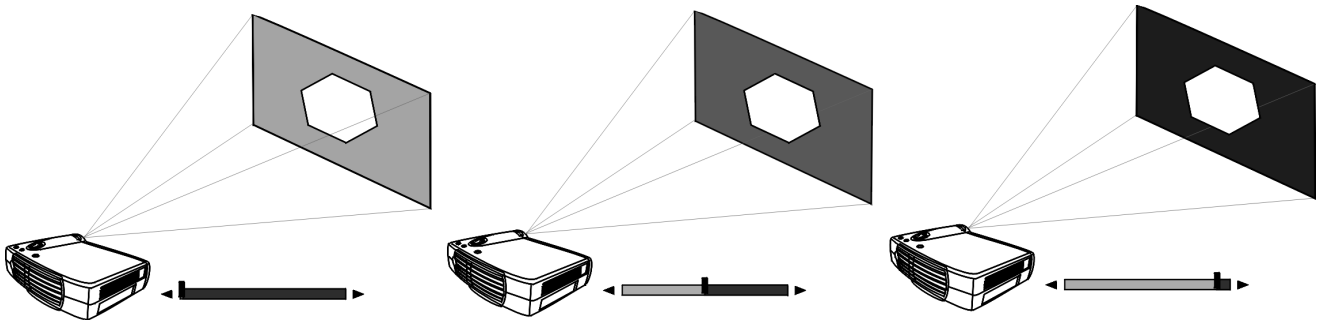

2. Image Menu

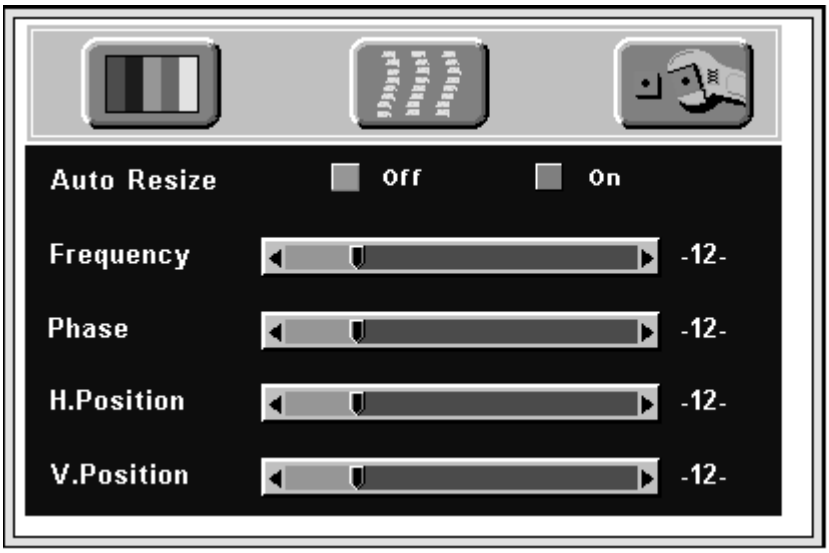

Auto resize

Press On and the Auto Resize function will automatically adjust the image to fit on the screen.

OFF ON

Phase (Auto Resize OFF)

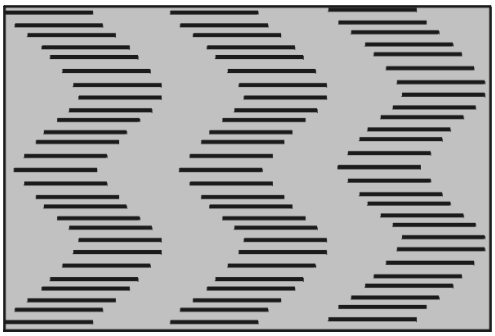

Frequency (Auto Resize OFF)

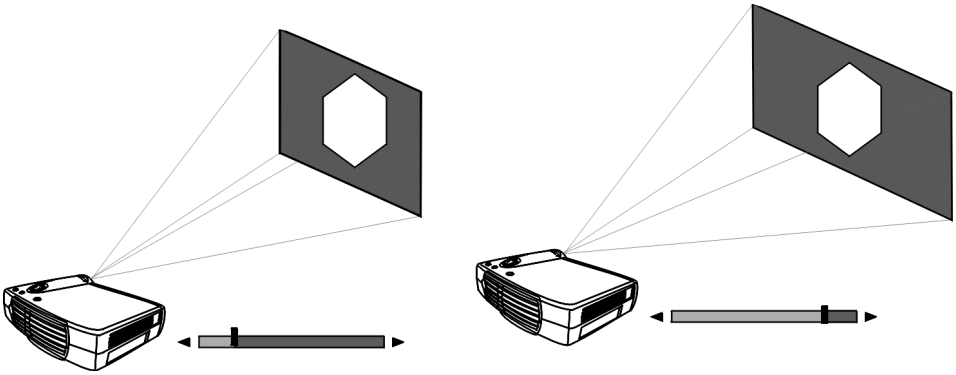

H-position

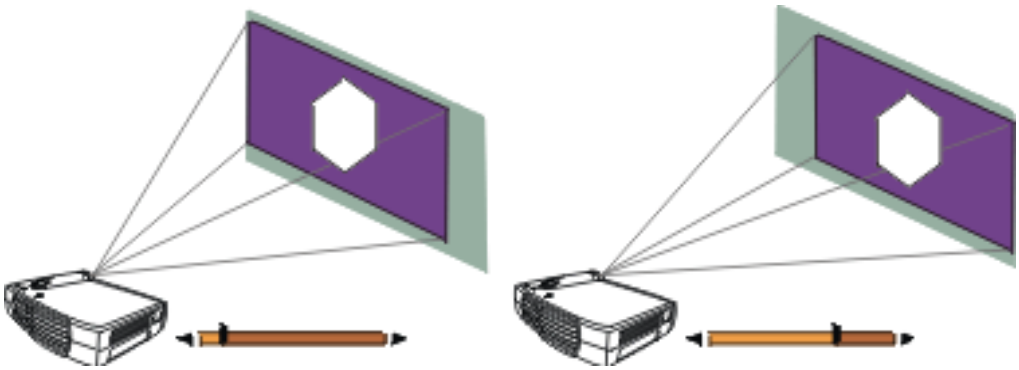

V-position

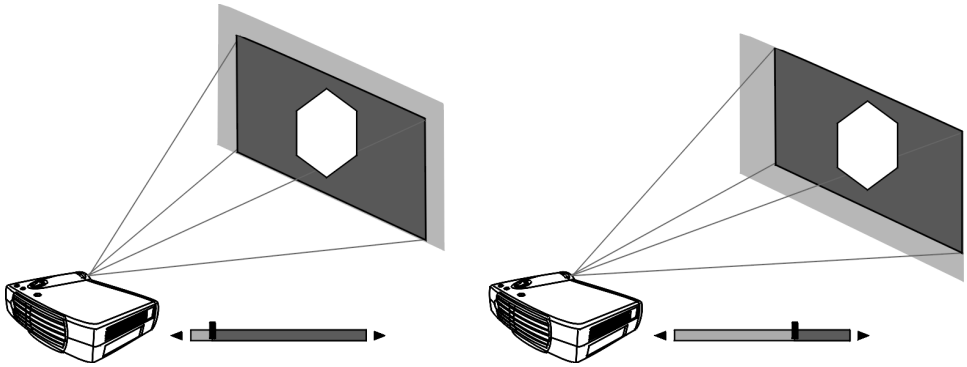

3. Sub-menu image with AV Input

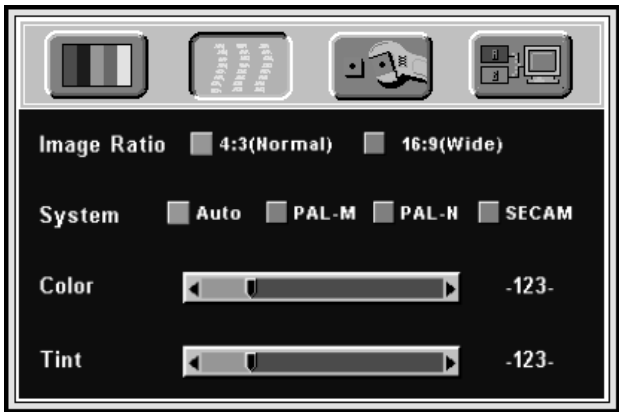

This menu is only available when the input signal is from Video or S-Video.

Image Ratio

4:3 (Normal) 16:9 (Video)

System

Auto PAL-M PAL-N SECAM

Color

Less More

Tint

Red Green

4. Control Menu

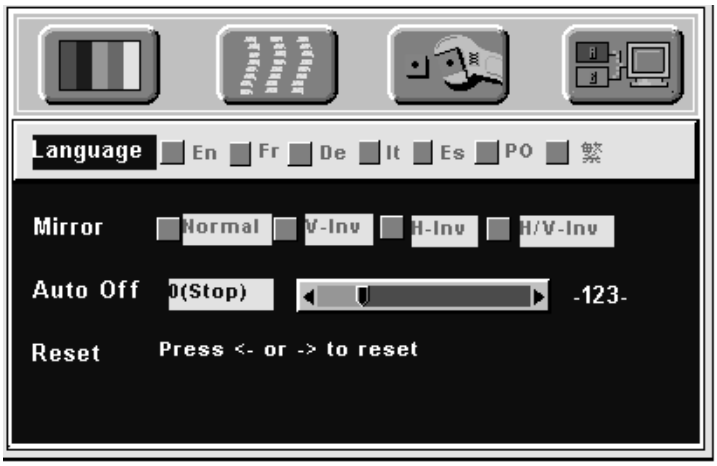

Language

English (En), French (Fr), German (De), Italian (It), Spanish (Es), Portuguese (Po), Traditional Chinese (TC)

Mirror

Normal V-Inv (Vertically Inverted), H-Inv (Horizontally Inverted), H/V-Inv (Horizontally and Vertically Inverted) will invert the image for proper display according to the desired projector position.

1. Default
2. Ceiling-mounted projection
3. Rear-screen projection
4. Ceiling-mounted and Rear screen projection

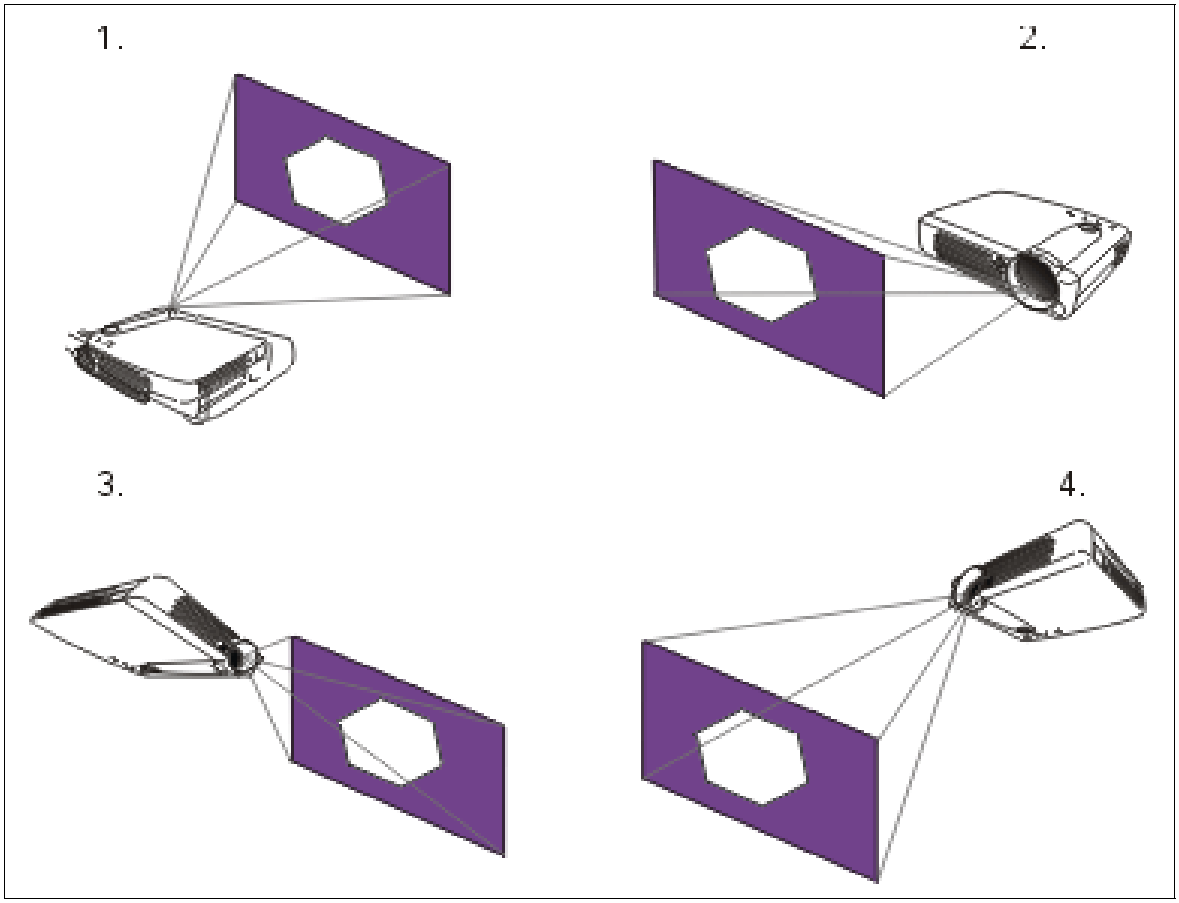

Auto off

This will turn off the power after 60 minutes.

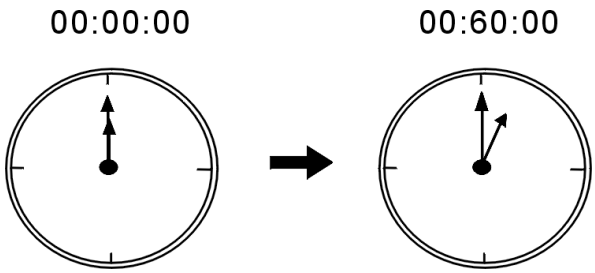

Reset

This will restore the projector to its factory default settings.

5. Source Menu

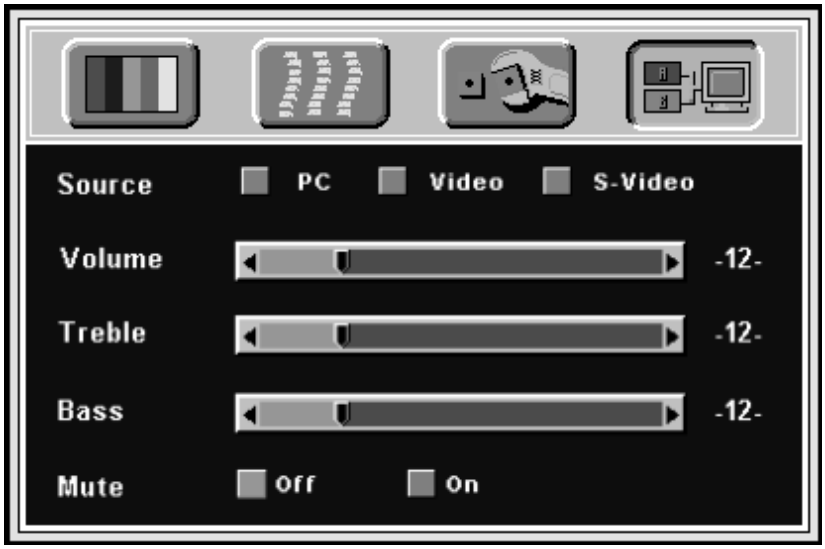

Source

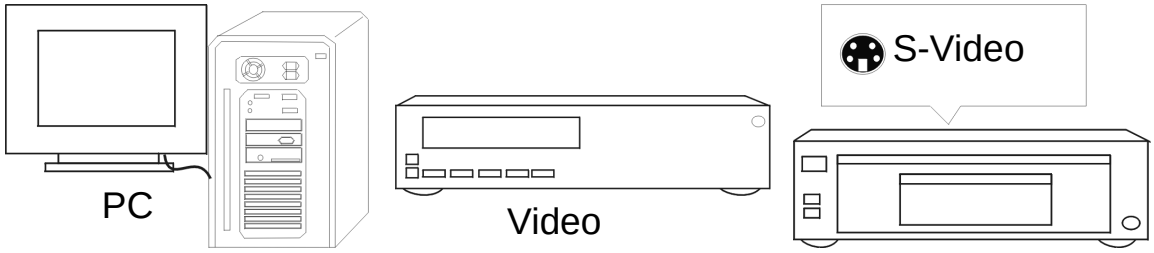

Volume

Treble

Bass

Mute

Off **On**

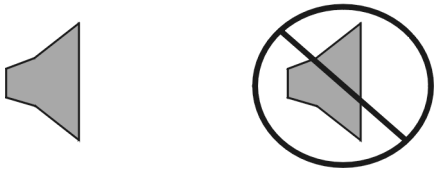

Shutdown

1. Press POWER and the lamp will shut down.
2. The fan will continue to run for approximately 60 seconds.

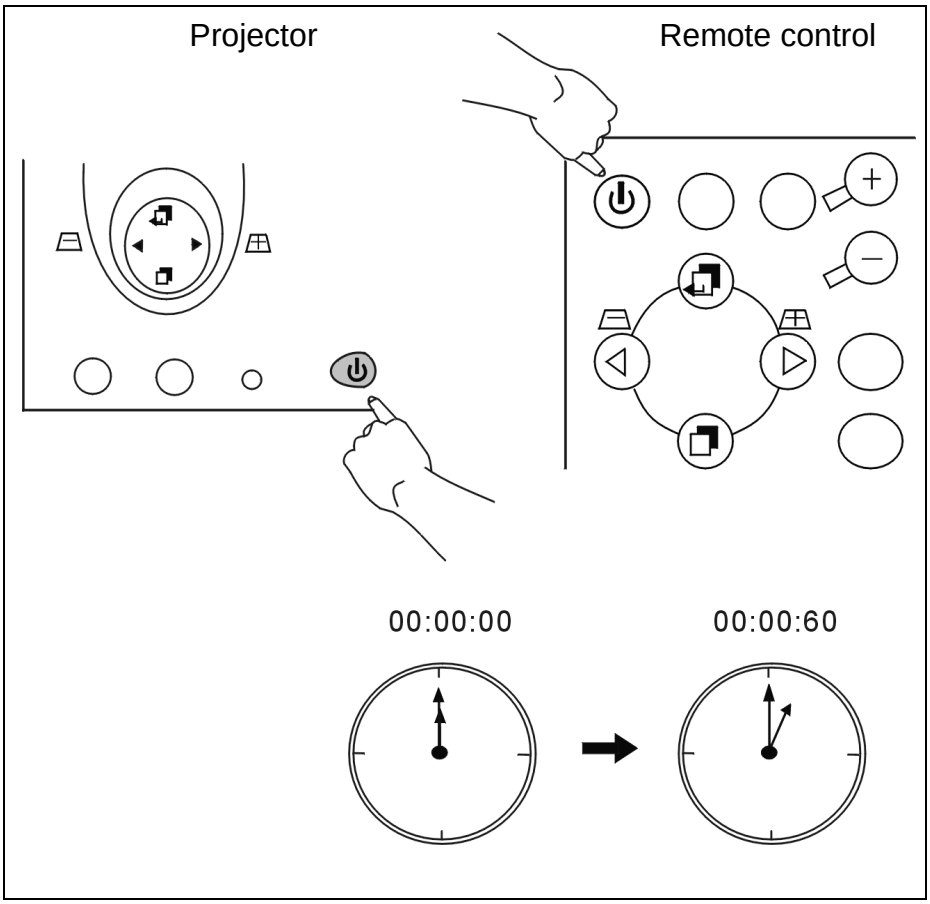

3. Disconnect the power cord from the wall socket.

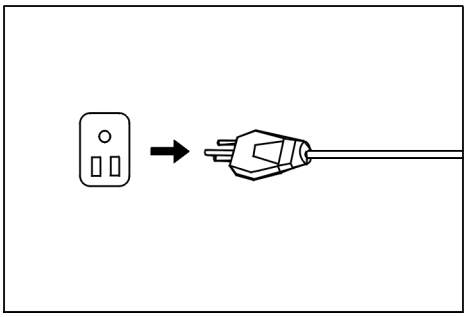

⚠ Caution

Please do not unplug the power cord before POWER is shut down or during the cooling process for 60 seconds.

MAINTENANCE

Lamp Information

Use and Replacement of Lamp

The projector lamp lifetime normally is approximately 1200 to 1500 hours. During the normal lamp life, pictures and colors are projected brightly and crisply. Past the normal lamp life, colors and pictures may look faint.

An old lamp could cause a malfunction to the projector and may explode. When the Lamp Indicator lights up red or a message displays to suggest the time of lamp replacement, please change a new lamp or consult your dealer.

LED Status Indicators

Lamp Life Indicators	When this LED shows red continuously, it is warning you that the lamp life has exceeded **1500** hours. Replace the projection lamp with a new one immediately.
CHANGE THE LAMP, AND RESET THE LAMP TIMER	The lamp has been in operation for 1200 hours. Change a new lamp for optimal performance.
CHANGE THE LAMP. THE POWER WILL TURN OFF AFTER 20 HOURS	The lamp has been in operation for 1479 hours, and the power will turn off after 20 hours.
CHANGE THE LAMP!	The lamp has been in operation for over 1500 hours, and the power will turn off automatically in 10 minutes. All of these messages will not display for more than 3 minutes, but each message will be displayed whenever you turn on the projector.
Lamp is not properly attached	LED blinks rapidly.
Temperature is too high	When the projector's internal temperature is too hot to operate safely, the LED blinks slowly for one minute and the lamp turns off automatically. If the LED light is off, the projector's lamp and temperature are operating under normal conditions.

⚠ **Caution**

The LAMP indicator will light if the lamp becomes too hot. Turn off the power and let the projector cool for 45 minutes. If the LAMP indicator is still red when turning the power on, please contact your dealer.

Lamp Replacement

⚠ Caution

To reduce the risk of electrical shock, always turn off the projector and disconnect the power cord before changing the lamp.

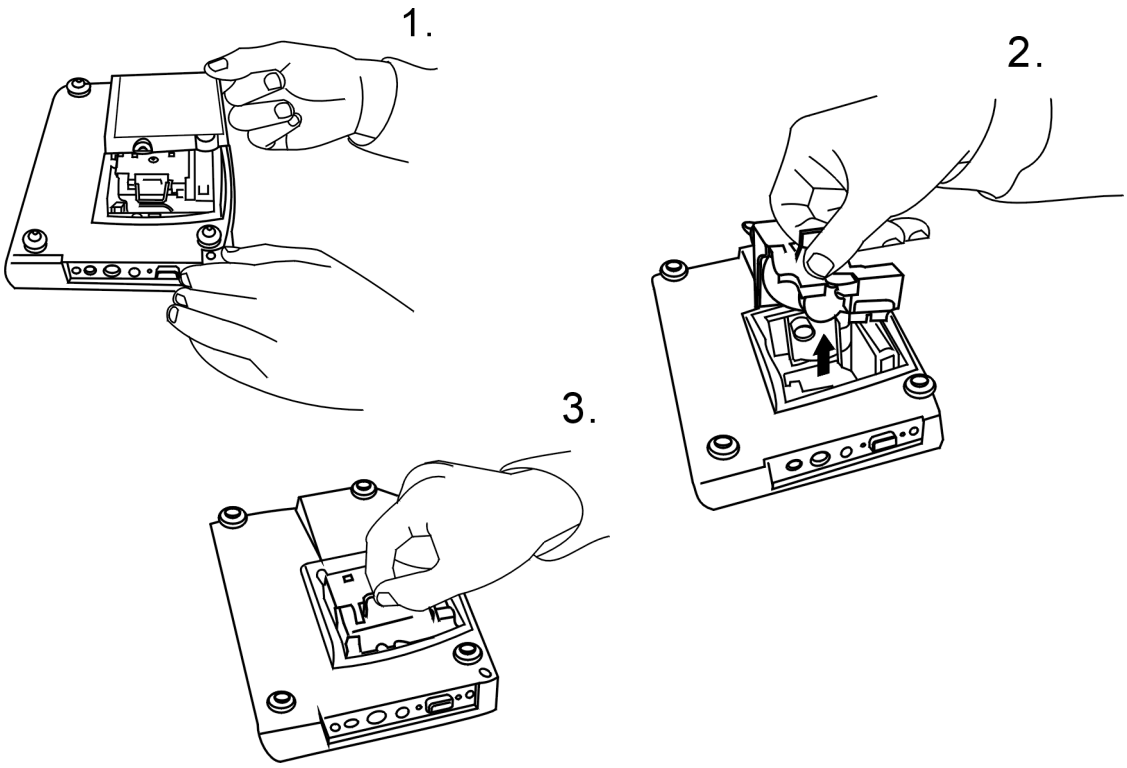

1. Press the **POWER** button to switch off the projector and disconnect the power cord from the outlet.
2. Loosen the screw and remove the lamp cover. If the lamp is hot, avoid burns by waiting 45 minutes until the lamp has cooled.
3. Loose**n** the **3** screws indicated by the arrows above. (It is strongly recommended you use a magnetic-headed screwdriver, if possible. Pull the handle to remove the lamp housing. If the screws are not loosened completely, they could injure your fingers. Do not insert your hand into the box after the lamp is removed. If you touch the optical parts inside, this could cause color unevenness, etc.
4. Replace the lamp with the new one. Insert it in the projector, and tighten the screws firmly. Loose screws may cause a bad connection, which may result in a malfunction.
5. Re-install the lamp cover and tighten the screw. **Do not turn on the power with the lamp cover removed.** Whenever the lamp is replaced, reset the total lamp operation time. Do not reset if the lamp is not replaced as this could cause breakage.

⚠ **Caution**

To reduce the risk of severe burns, allow the projector to cool for at least 45 minutes before replacing the lamp.

To reduce the risk of injuries to fingers and damage to internal components, use caution when removing lamp glass that has shattered into sharp pieces.

To reduce the risk of injuries to fingers and/or decreasing image quality by touching the lens, do not touch the empty lamp compartment when the lamp is removed.

This lamp contains mercury. Consult your local hazardous waste regulations to dispose of this lamp in a proper manner.

Resetting Lamp Hours

If you replace the lamp after 1500 hours of operation, please proceed as follows within 10 minutes of powering on.

OSD	FUNCTION
Lamp 1234 Hr.	Press the Exit button on the projector for 3 seconds to display the total used lamp time.
Lamp 1234 Hr. Reset	Press the MENU button on the projector during the lamp hour message. An adjustment message will appear.
Lamp 1234 Hr. Cancel	• Press ◀ or ▶ to select the setting. To select the default setting, select “Reset” (or “Cancel” to return to the default setting). • Press EXIT to leave.

Service Information

Accessories (Included in standard package)

Description	Part Number
Power cord (EU)	27.01218.191
Power cord (US)	27.01118.131
Power cord (UK)	27.02718.201
Signal cable	50.J0508.502
RCA cable	50.J1303.501
S-Video cable	50.72920.011
PC - PC Audio cable	50.T4405.501
Audio - PC Audio cable	50.J0705.501
Soft carrying case	98.J1302.001
Lens cover	42.J1345.001
Remote control	98.J1301.001
3-2 converter	22.91007.001
Skin case	98.J1904.001

Description of Part Number (Not Included in Standard Packet)

Description of parts	Part number
Deluxe carry case (for projector and notebook)	90.J0528.006
Mac Adapter (switchable)	20.20118.A15
120W Lamp module	60.J1322.001

Ordering Parts or Getting Information

For product information, product assistance, service information, or to order accessories, please contact Acer Communications & Multimedia Inc. at http://www.acerCM.com.

TROUBLESHOOTING

Common Problems & Solutions

PROBLEMS	TRY THESE SOLUTIONS
NO POWER	• Plug the power cord into the AC inlet. • Plug the power cord into the power inlet. • Wait two minutes after the projector is turned off before turning the projector back on.
NO PICTURE	• Check for the proper input source. • Ensure all cables are connected properly. • Adjust the brightness and contrast. • Remove the lens cap.
TRAPEZOID IMAGE ON THE SCREEN	• Reposition the unit to improve its angle on the screen. • Use the **Keystone** correction key on the control panel of the projector or the remote control unit.
POOR COLOR	• Select the correct video system. • Adjust brightness, contrast, or saturation.
BLURRED IMAGE	• Press **Auto** on the control panel of the projector or the remote control unit to get better picture quality. • Adjust the focus. • Reposition the unit to improve its screen angle. • Ensure the distance between the unit and screen is within the adjustment range of the lens.
REMOTE CONTROL DOES NOT WORK	• Replace the battery with a new one. • Make sure there is no obstacle between the remote control and the unit. • Stand within 4 meters (13 feet) of the unit. • Make sure nothing blocks the receiver on the control pad.

Status Messages

On Screen Messages	Description
SEARCHING	Projector is searching for input.
INPUT SIGNAL DETECTED, ACTIVATING AUTO IMAGE	Projector has identified the input signal and is running the auto image adjustment function.
SYNC IS OUT OF RANGE	Input signal's frequency exceeds the projector's.
CHANGE THE LAMP, AND RESET THE LAMP TIMER	The lamp has been in operation for 1200 hours. Lamp replacement is recommended.
CHANGE THE LAMP, THE POWER WILL TURN OFF AFTER 20 HOURS	The lamp has been in operation for 1479 hours, and the power will turn off after 20 more hours. Replace the lamp as soon as possible.
CHANGE THE LAMP!	The lamp has been in operation for over 1500 hours, and the power will turn off automatically in 10 minutes. Replace the lamp immediately.

SPECIFICATIONS

Projector Specifications

Technical Specifications

Note: All specifications are subject to change without notice.

General

Product name	Personal Projector	
Model name	SL700X (X-XGA)	1024X768 dpi XGA
	SL700S (S-SVGA)	800X600 dpi SVGA

Optical

Display system	1-CHIP DMD
Lens F/Number	F/2.6 Focal Length: F = 36 mm
Lamp	120W VIP lamp

Electrical

Power supply	AC90 ~ 240V, 6.5A ~ 2.9A, 50/60 Hz (Automatic)
Power consumption	200 W (Max)

Mechanical

Dimensions	229 mm (W) x 53 mm (H) x 178 mm (D)
Operating temperature range	0°C ~ 40°C
Weight	3 lbs

Input terminal

Computer Input	
RGB input	D-sub 15-pin (female)
Video Signal Input	
S VIDEO	Mini DIN 4-pin terminal
VIDEO	RCA Jack terminal
Audio Signal Input	
Mini Jack Mono Audio Terminal	

Output

1 Watt speaker x 1

Timing Chart

Resolution	H Sync (kHz)	V Sync (kHz)	Remark
640x350	31.5	70.1	
640x400	37.9	85.1	VESA
720x400	31.5	70.0	
720x400	37.9	85.1	VESA
640x480	31.5	60.0	VESA
640x480	37.9	72.8	VESA
640x480	35	66.7	Macintosh
640x480	43.3	85.0	VESA
800x600	35.2	56.3	VESA
800x600	37.9	60.3	VESA
800x600	46.9	75.0	VESA
800x600	48.1	72.2	VESA
800x600	53.7	85.1	VESA
832x624	49.7	74.5	Macintosh
1024x768	48.4	60.0	VESA
1024x768	56.5	70.1	VESA
1024x768	60.0	75.0	VESA
1024x768	68.7	85.0	VESA
1280x1024	64.0	60.0	VESA
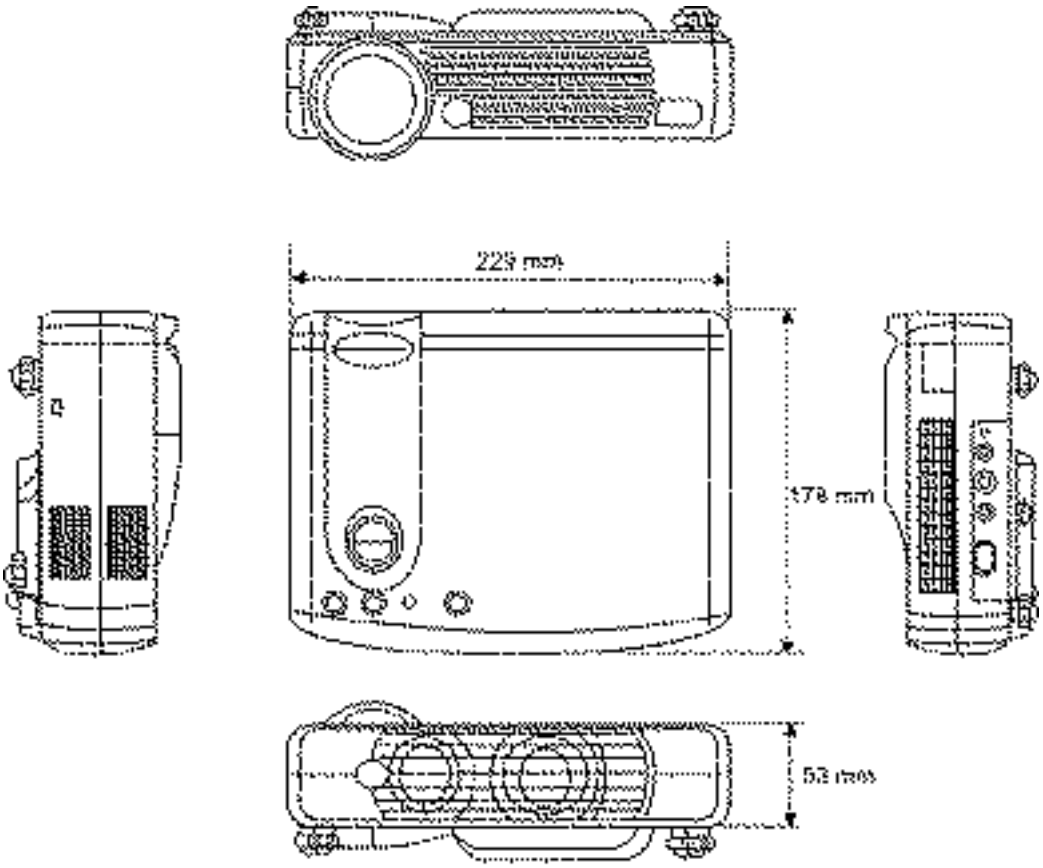
DIMENSIONS