USA's primary source for projector lamps

myprojectorlamps

PROJECTOR OWNER'S MANUAL

# Acer

# SL 700X-S PAGE1

**Need a replacement lamp for this projector?**

**www.myprojectorlamps.com**

Original manufacturer manual, provided unmodified as a courtesy of MyProjectorLamps.com.
All trademarks belong to their respective owners.

acer

# DLP PROJECTOR

# SL 700X/S

## USER'S GUIDE

Thank you for purchasing the Acer DLP Projector.

**Please read this user's guide to ensure correct use of the device.** Save this user's guide for future reference.

## Outline

This DLP Projector can display various computer signals and NTSC/PAL/SECAM video signals.

## Features

1. **High Brightness**
2. **High Resolution**
3. **Compact Size, Feather Weight for Portability**
4. **Durable Magnesium Alloy Body**
5. **RGB Output Terminal**
6. **One Touch Auto-Adjustment Function (i - key)**
7. **Easy Keystone Adjustment**

## Copyright

Copyright © 2001 by Acer Communications & Multimedia Inc.. All rights reserved. No part of this publication may be reproduced, transmitted, transcribed, stored in a retrieval system or translated into any language or computer language, in any form or by any means, electronic, mechanical, magnetic, optical, chemical, manual or otherwise, without the prior written permission of Acer Communications & Multimedia Inc.

## Disclaimer

Acer Communications & Multimedia Inc. makes no representations or warranties, either expressed or implied, with respect to the contents hereof and specifically disclaims any warranties, merchantability or fitness for any particular purpose. Furthermore, Acer Communications & Multimedia Inc. reserves the right to revise this publication and to make changes from time to time in the contents hereof without obligation of Acer Communications & Multimedia Inc. to notify any person of such revision or changes.

| **Fill this in!!** | |
|---|---|
| For future service convenience, record the following information in the space below. The serial number is on the back of the product. | |
| **Projector Information** | |
| Product Name: | SL 700X/S |
| Serial Number: | |
| Date of Purchase: | |
| **Dealer Information** | |
| Dealer: | |
| Telephone Number: | |
| Address: | |

# Table of Contents

**INTRODUCTION** - 1
Safety Instructions - 1
Warranty - 2
Limited Warranty - 2
Shipping Contents - 3
Optional Accessories - 4
Projector Description - 4
Projector - 4
External Control Panel - 5
Adjuster - 6
Projector Features - 6
Remote Control Description - 7
Remote Control Features - 7
Installing or Replacing Batteries - 9
**INSTALLATION** - 10
Screen Size - 10
Connecting to Various Equipment - 10
**OPERATION** - 11
Start Up - 11
Digital Keystone Correction - 12
Auto Adjustment - 12
Source Selection - 13
Menu System - 13
1. Display Menu - 14
2. Image Menu - 15
3. Sub-menu image with AV Input - 17
4. Control Menu - 18
5. Source Menu - 20
Shutdown - 21
**MAINTENANCE** - 22
Lamp Information - 22
Use and Replacement of Lamp - 22
LED Status Indicators - 22
Service Information - 23
Accessories (Included in standard package) - 23
Description of Part Number (Not Included in Standard Packet) - 23
Ordering Parts or Getting Information - 23
**TROUBLESHOOTING** - 24
Common Problems & Solutions - 24
Status Messages - 25
**SPECIFICATIONS** - 26
Projector Specifications - 26
Timing Chart - 26
**DIMENSIONS** - 28

# INTRODUCTION

⚠ **Caution**

**TO PREVENT SHOCK, DO NOT OPEN THE CABINET. NO USER –SERVICEABLE PARTS INSIDE. REFER SERVICING TO QUALIFIED SERVICE PERSONNEL. PLEASE READ THIS USER'S GUIDE BEFORE YOU OPERATE YOUR PROJECTOR. SAVE THIS USER'S GUIDE FOR FUTURE REFERENCE .**

## Safety Instructions

1. Read this user's guide before you operate your projector and save it for future reference.
2. The lamp becomes extremely hot during operation. Allow the projector to cool for approximately 45 minutes prior to removing the lamp assembly for replacement. Do not operate lamps beyond the rated lamp life. Excessive operation of lamps beyond the rated life could cause them to explode on rare occasions.
3. Never replace lamp assembly or any electronic components unless the projector is unplugged.
4. To reduce the risk of electric shock, do not disassemble this appliance. Take it to a qualified technician when service or repair is required. Incorrect reassembly can cause electric shock when the appliance is subsequently used.
5. Do not place this product on an unstable cart, stand, or table. The product may fall, causing serious damage to the product.
6. This product is capable of displaying inverted images for ceiling mount installation. Please use suitable equipment for mounting the unit and ensure it is securely installed.
7. To prevent lamps from bursting, change the lamp after changing the mounting position of projectors (desktop to ceiling mount or ceiling mount to desktop mount).

⚠ **Caution**

- **Always open the lens shutter or remove the lens cap when the projector lamp is on.**
- **Do not look straight at the projector lens during operation. The intense light beam may damage your eyesight.**
- **In some countries, the line voltage is NOT stable. This projector is designed to operate safely within a bandwidth of 110 to 230 volts, but could fail if power cuts or surges of ±10 volts occur. In these high-risk areas, it is recommended to install a power stabilizer unit.**

**Save this user's guide**: The information contained in this manual will assist you in operating and maintaining your Acer SL700 Series Personal Projector.

# Warranty

## Limited Warranty

Acer warrants this product against any defects in material and workmanship, under normal usage and storage during a period of 1 year from the date of purchase.

Exclusion to Warranty: The lamps are considered a consumable item and are warrantied for 90 days or 500 hours, whichever occurs first. Proof of purchase date will be required with any warranty claim. In the event this product is found to be defective within the warranty period, Acer's only obligation and your exclusive remedy shall be replacement of any defective parts (labor included). To obtain warranty service, notify the dealer immediately from which you purchased the product of any defects.

Important: The above warranty shall be void if the customer fails to operate the product in accordance with Acer's written instructions. This warranty gives you specific legal rights, and you may have other rights which vary from country to country.

**FCC STATEMENT - CLASS A**: This equipment generates, uses and can radiate radio frequency energy, and if not installed and used in accordance with the instruction manual, may cause interference to radio communications. It has been tested and found to comply with the limits for a Class "A" computing device pursuant to Subpart B of Part 15 of the FCC Rules, which are designed to provide reasonable protection against such interference when operated in a commercial environment. Operation of this equipment in a residential area is likely to cause interference, in which case the user at his/her own expense will be required to take whatever measures may be required to correct the interference.

**FCC STATEMENT - CLASS B**: This equipment generates, uses and can radiate radio frequency energy and, if not installed and used in accordance with the instructions, may cause harmful interference to radio communications. However, there is no guarantee that interference will not occur in a particular installation. If this equipment does cause harmful interference to radio or television reception, which can be determined by turning the equipment off and on, the user is encouraged to try to correct the interference by one or more of the following measures:

— Reorient or relocate the receiving antenna.

— Increase the distance between the equipment and receiver.

— Connect the equipment into an outlet on a circuit different from that to which the receiver is connected.

— Consult the dealer or an experienced radio/TV technician for help.

**EEC STATEMENT**: This machine was tested against the 89/336/EEC (European Economic Community) for EMC (Electro Magnetic Compatibility) and fulfills these requirements.

# Shipping Contents

The Acer SL700 Series Projector is shipped with the necessary cables required for standard PC, Macintosh or laptop computer connections. Carefully unpack and verify that you have all the items shown below. If any of these items are missing, please contact your place of purchase..

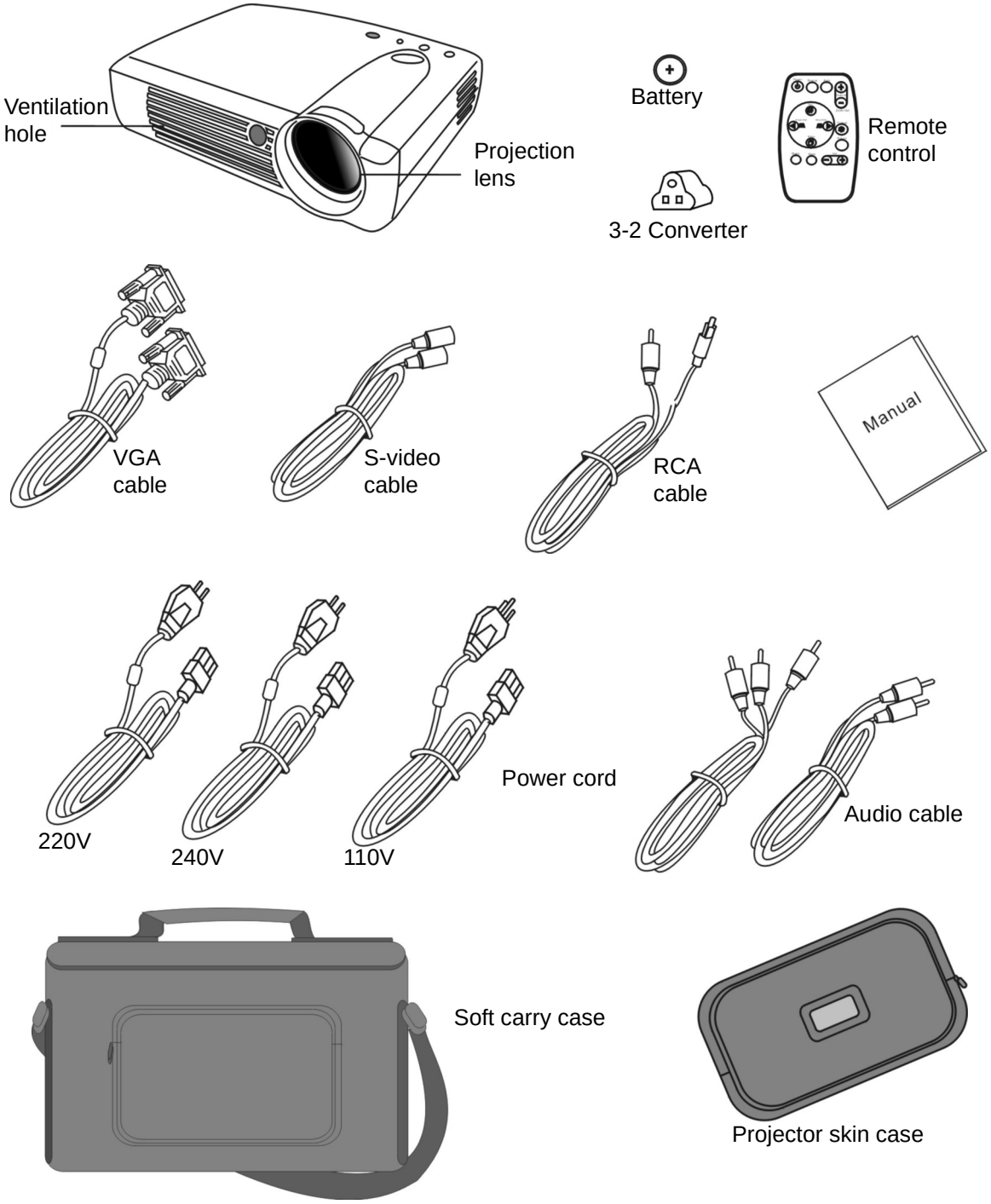

# Optional Accessories

1. Luxury carry case
2. Spare lamp kit

# Projector Description

## Projector

| | |
|---|---|
| 1. External control panel (see next page)<br>2. Projection lens<br>3. Front adjustment feet<br>4. IR remote sensor<br>5. Ventilation grill<br>6. Kensington lock<br>7. AC power cord input<br>8. S-video connector | 9. RCA connector<br>10. D-sub connector (for computer/ input)<br>11. Audio input<br>12. Rear adjustment feet<br>13. Lamp access door (underneath unit) |

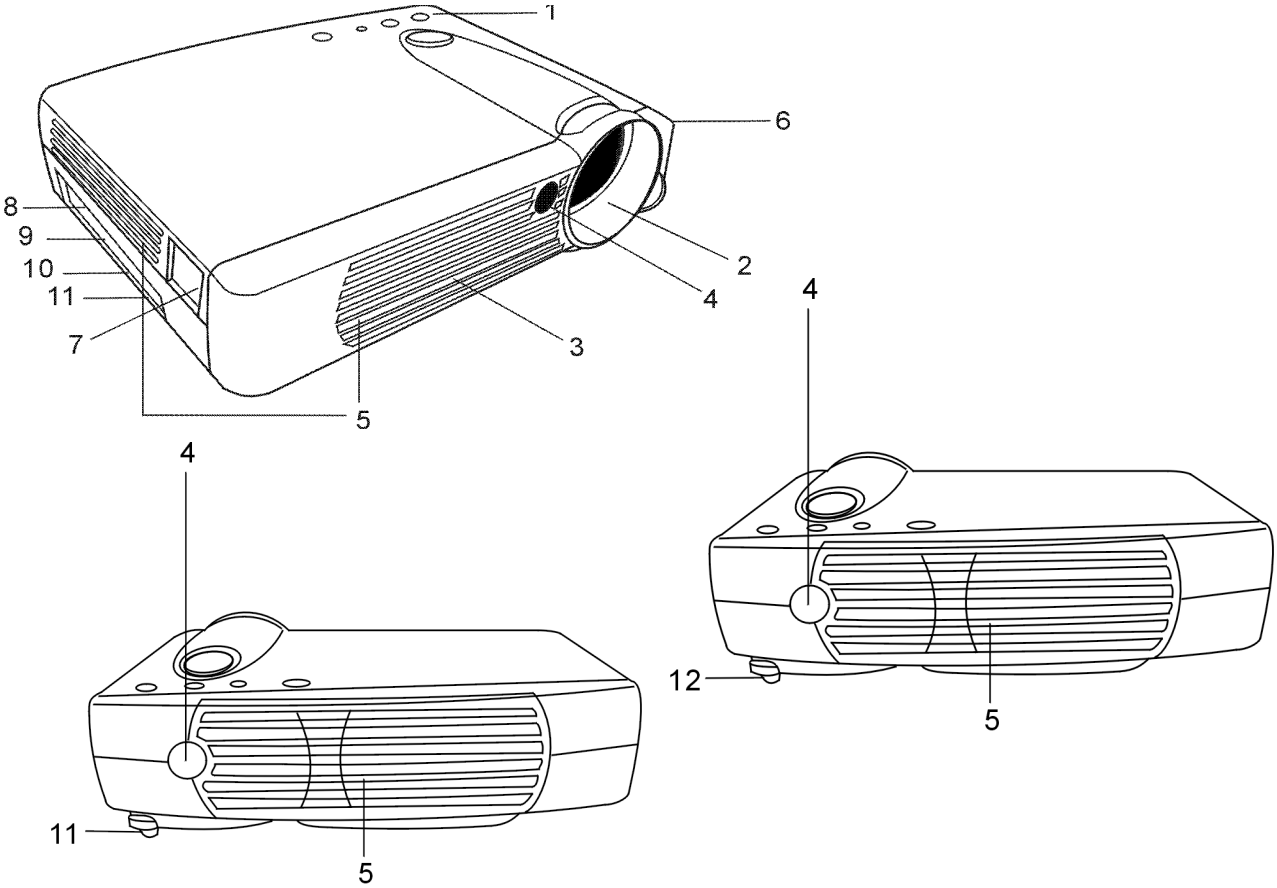

## External Control Panel

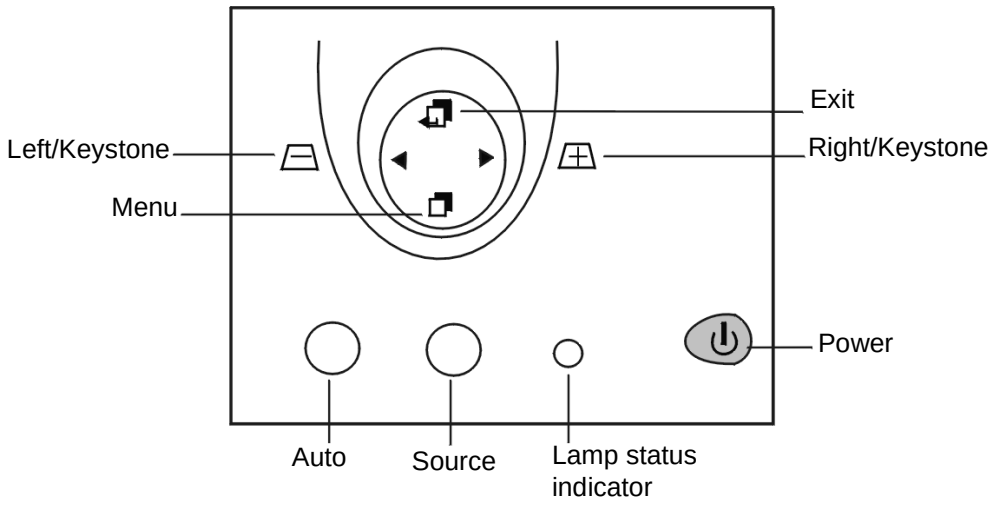


- The **Infrared Remote Receiver (Front and Rear)** allows the projector to accept signals from the remote control. For best results, be sure to aim the control toward the sensor without any obstructions between the two, and at a distance no greater than 6 meters.
- **Menu** will display the menu system on screen. Press **Menu** again to access the sub-menus. **Left** and **Right** help you navigate among choices and settings in the menus and sub-menus. However, when the onscreen menu is not activated, the **Left** and **Right** buttons will function as **Keystone +/-** hot keys.
- Press the **Exit** button to go back to the main menu. Press **Exit** again to leave the menu system.
- The **Status Indicator** will blink or light up when the lamp needs service, cooling or replacement. See “Status Messages” on page 27. for more detailed information.
- When the projector is on, **back-lit Power** will blink during warm-up and turn to solid  green to indicate the projector is ready for use.
- Press **Power** for 1 second to turn the projector on or off.
- **Auto** key: Automatically sense the best picture quality for current received signals.
- **Source** key: Select signal sources, PC, RCA, S-video.

## Adjuster

There is one adjuster at the bottom of the projector. It raises up the projector when the projected image is offset vertically.

1. Lift the projector up and press the adjuster button to release the adjuster.
2. The adjuster will drop into position and be locked.
3. Remember to press the adjuster button and push the adjuster back to as it was .

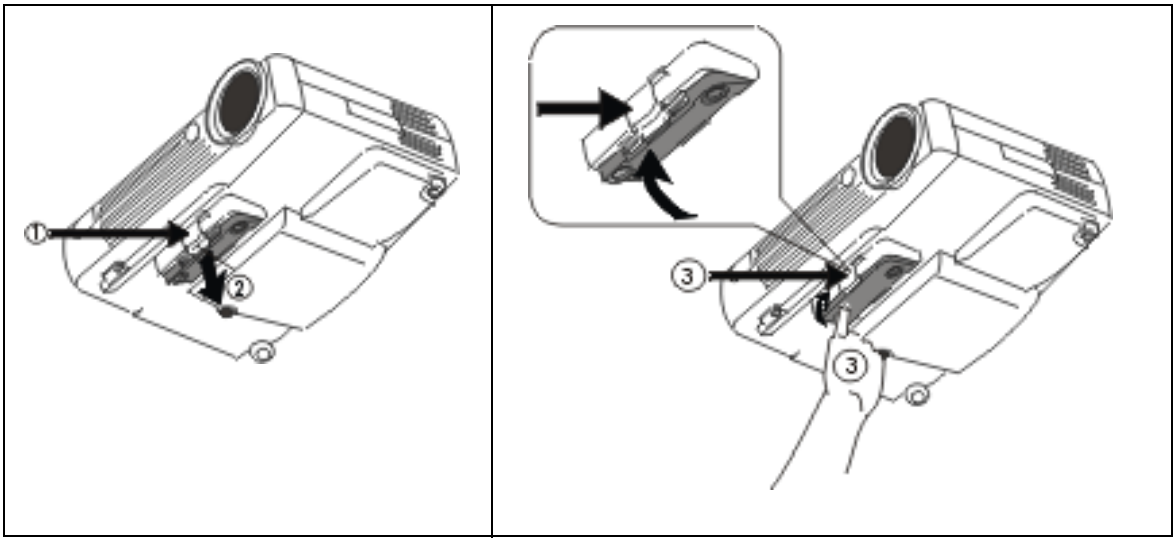


## Projector Features

The SL700 Series Projector integrates high performance optical engine projection and user-friendly design to deliver high reliability and better experience.

The SL700X/S Series Projector offers the following features:

- One key auto-adjustment to display the best picture quality
- Easy digital keystone correction through hot keys to correct tilted pictures
- Powerful AV function to provide high AV picture results.
- Compact and portable unit
- Full-function remote control
- Easy to set up and use
- On screen menus in 7 languages: English, French, German, Italian, Spanish, Portuguese, and Traditional Chinese.
- Adjustable color balance control for data/video
- Ultra-high brightness projection lamp
- Ability to display high quality 16.7 million colors

**Note: The brightness of your machine will vary depending on the ambient room conditions and contrast/brightness settings.**