USA's primary source for projector lamps

myprojectorlamps

PROJECTOR OWNER'S MANUAL

Acer

P1165EP

Need a replacement lamp for this projector?

www.myprojectorlamps.com

Original manufacturer manual, provided unmodified as a courtesy of MyProjectorLamps.com.
All trademarks belong to their respective owners.

Acer Projector

P5260E/P5260EP/P1165E/P1165EP Series User's Guide

Copyright © 2007. Acer Incorporated.
All Rights Reserved.

Acer Projector P5260E/P5260EP/P1165E/P1165EP Series User's Guide
Original Issue: 10/2007

Changes may be made periodically to the information in this publication without obligation to notify any person of such revisions or changes. Such changes will be incorporated in new editions of this manual or supplementary documents and publications. This company makes no representations or warranties, either expressed or implied, with respect to the contents hereof and specifically disclaims the implied warranties of merchantability or fitness for a particular purpose.

Record the model number, serial number, purchase date and place of purchase information in the space provided below. The serial number and model number are recorded on the label affixed to your computer. All correspondence concerning your unit should include the serial number, model number and purchase information.

No part of this publication may be reproduced, stored in a retrieval system, or transmitted, in any form or by any means, electronically, mechanically, by photocopy, recording or otherwise, without the prior written permission of Acer Incorporated.

Acer Projector P5260E/P5260EP/P1165E/P1165EP Series

Model number: _____

Serial number: _____

Date of purchase: _____

Place of purchase: _____

Acer and the Acer logo are registered trademarks of Acer Incorporated. Other companies' product names or trademarks are used herein for identification purposes only and belong to their respective companies.

"HDMI, the HDMI logo and High Definition Multimedia Interface are trademarks or registered trademarks of HDMI Licensing LLC."

Information for your safety and comfort

Read these instructions carefully. Keep this document for future reference. Follow all warnings and instructions marked on the product.

Turning the product off before cleaning

Unplug this product from the wall outlet before cleaning. Do not use liquid cleaners or aerosol cleaners. Use a damp cloth for cleaning.

Caution for plug as disconnecting device

Observe the following guidelines when connecting and disconnecting power to the external power supply unit:

- Install the power supply unit before connecting the power cord to the AC power outlet.
- Unplug the power cord before removing the power supply unit from the computer.
- If the system has multiple sources of power, disconnect power from the system by unplugging all power cords from the power supplies.

Caution for Accessibility

Be sure that the power outlet you plug the power cord into is easily accessible and located as close to the equipment operator as possible. When you need to disconnect power to the equipment, be sure to unplug the power cord from the electrical outlet.

Warnings!

- Do not use this product near water.
- Do not place this product on an unstable cart, stand or table. If the product falls, it could be seriously damaged.
- Slots and openings are provided for ventilation to ensure reliable operation of the product and to protect it from overheating. These openings must not be blocked or covered. The openings should never be blocked by placing the product on a bed, sofa, rug or other similar surface.

This product should never be placed near or over a radiator or heat register, or in a built-in installation unless proper ventilation is provided.

- Never push objects of any kind into this product through cabinet slots as they may touch dangerous voltage points or short-out parts that could result in a fire or electric shock. Never spill liquid of any kind onto or into

the product.

- To avoid damage of internal components and to prevent battery leakage, do not place the product on a vibrating surface.
- Never use it under sporting, exercising, or any vibrating environment which will probably cause unexpected short current or damage rotor devices, lamp.

Using electrical power

- This product should be operated from the type of power indicated on the marking label. If you are not sure of the type of power available, consult your dealer or local power company.
- Do not allow anything to rest on the power cord. Do not locate this product where people will walk on the cord.
- If an extension cord is used with this product, make sure that the total ampere rating of the equipment plugged into the extension cord does not exceed the extension cord ampere rating. Also, make sure that the total rating of all products plugged into the wall outlet does not exceed the fuse rating.
- Do not overload a power outlet, strip or receptacle by plugging in too many devices. The overall system load must not exceed 80% of the branch circuit rating. If power strips are used, the load should not exceed 80% of the power strip's input rating.
- This product's AC adapter is equipped with a three-wire grounded plug. The plug only fits in a grounded power outlet. Make sure the power outlet is properly grounded before inserting the AC adapter plug. Do not insert the plug into a non-grounded power outlet. Contact your electrician for details.

Warning! The grounding pin is a safety feature. Using a power outlet that is not properly grounded may result in electric shock and/or injury.

Note: The grounding pin also provides good protection from unexpected noise produced by other nearby electrical devices that may interfere with the performance of this product.

- Use the product only with the supplied power supply cord set. If you need to replace the power cord set, make sure that the new power cord meets the following requirements: detachable type, UL listed/CSA certified, type SPT-2, rated 7A 125V minimum, VDE approved or its equivalent, 4.6 meters (15 feet) maximum length.

Product servicing

Do not attempt to service this product yourself, as opening or removing covers may expose you to dangerous voltage points or other risks. Refer all servicing to qualified service personnel.

Unplug this product from the wall outlet and refer servicing to qualified service personnel when:

- the power cord or plug is damaged, cut or frayed
- liquid was spilled into the product
- the product was exposed to rain or water
- the product has been dropped or the case has been damaged
- the product exhibits a distinct change in performance, indicating a need for service
- the product does not operate normally after following the operating instructions

Note: Adjust only those controls that are covered by the operating instructions, since improper adjustment of other controls may result in damage and will often require extensive work by a qualified technician to restore the product to normal condition.

Warning! For safety reasons, do not use non-compliant parts when adding or changing components. Consult your reseller for purchase options.

Your device and its enhancements may contain small parts. Keep them out of the reach of small children.

Additional safety information

- Do not look into the projector's lens when the lamp is on. The bright may hurt your eyes.
- Turn on the projector first and then signal sources.
- Do not place the product in following environments:
  - Space that is poorly ventilated or confined. At least 50cm clearance from walls and free flow of air around the projector is necessary.
  - Locations where temperatures may become excessively high, such as inside of a car with all windows rolled up.
  - Locations where excessive humidity, dust, or cigarette smoke may contaminate optical components, shortening the life span and darkening the image.
  - Locations near fire alarms.
  - Locations with an ambient temperature above 40 °C/104 °F.
  - Locations where the altitudes are higher than 10000 feet.
- Unplug immediately if there is something wrong with your projector. Do not operate if smoke, strange noise or odor comes out of your projector. It

might cause fire or electric shock. In this case, unplug immediately and contact your dealer.

- Do not keep using this projector if it is broken or you have dropped it. In this case, contact your dealer for inspection.
- Do not face the projector lens to the sun. It can lead to fire.
- When switching the projector off, please ensure the projector completes its cooling cycle before disconnecting power.
- Do not turn off the main power abruptly or unplug the projector during operation. It can lead to lamp breakage, fire, electric shock or other trouble. The best way is to wait for the fan to turn off before turning main power off.
- Do not touch air outlet grille and bottom plate which becomes hot.
- Clean the air filter frequently. The temperature inside may rise and cause damage when the filter/ventilation slots clogged with dirt or dust.
- Do not look into the air outlet grille when projector is operating. It may hurt your eyes.
- Always open the lens shutter or remove the lens cap when the projector is on.
- Do not block the projector lens with any object when the projector is under operation as this could cause the object to become heated and deformed or even cause a fire. To temporarily turn off the lamp, press HIDE on the projector or remote controller.
- The lamp becomes extremely hot during operation. Allow the projector to cool for approximately 45 minutes prior to removing the lamp assembly for replacement.
- Do not operate lamps beyond the rated lamp life. It could cause it to break on rare occasions.
- Never replace the lamp assembly or any electronic components unless the projector is unplugged.
- The product will detect the life of the lamp itself. Please be sure to change the lamp when it shows warning message.
- When changing the lamp, please allow unit to cool down, and follow all changing instructions.
- Reset the "Lamp Hour Reset" function from the onscreen display "Management" menu after replacing the lamp module.
- Do not attempt to disassemble this projector. There are dangerous high voltages inside which may hurt you. The only user serviceable part is the lamp which has its own removable cover. Refer servicing only to suitable qualified professional service personnel.
- Do not stand the projector on end vertically. It may cause the projector to fall over, causing injury or damage.
- This product is capable of displaying inverted images for ceiling mount installation. Only use acer ceiling mount kit for mounting the projector and ensure it is securely installed.

Operating environment for using wireless (optional)

Warning! For safety reasons, turn off all wireless or radio transmitting devices when using your machine under the following conditions. These devices may include, but are not limited to: wireless LAN (WLAN), Bluetooth and/or 3G.

Remember to follow any special regulations in force in any area, and always switch off your device when its use is prohibited or when it may cause interference or danger. Use the device only in its normal operating positions. This device meets RF exposure guidelines when used normally, and it and its antenna are positioned at least 1.5 centimeters (5/8 inches) away from your body (refer to the figure below). It should not contain metal and you should position the device the above-stated distance from your body.

To successfully transmit data files or messages, this device requires a good quality connection to the network. In some cases, transmission of data files or messages may be delayed until such a connection is available.

Ensure that the above separation distance instructions are followed until the transmission is completed.

Parts of the device are magnetic. Metallic materials may be attracted to the device, and persons with hearing aids should not hold the device to the ear with the hearing aid. Do not place credit cards or other magnetic storage media near the device, because information stored on them may be erased.

Medical devices

Operation of any radio transmitting equipment, including wireless phones, may interfere with the functionality of inadequately protected medical devices. Consult a physician or the manufacturer of the medical device to determine if they are adequately shielded from external RF energy or if you have any questions. Switch off your device in health care facilities when any regulations posted in these areas instruct you to do so. Hospitals or health care facilities may be using equipment that could be sensitive to external RF transmissions.

Pacemakers. Pacemaker manufacturers recommend that a minimum separation of 15.3 centimeters (6 inches) be maintained between wireless devices and a pacemaker to avoid potential interference with the pacemaker. These recommendations are consistent with the independent research by and recommendations of Wireless Technology Research. Persons with pacemakers should do the following:

- Always keep the device more than 15.3 centimeters (6 inches) from the pacemaker.
- Not carry the device near your pacemaker when the device is switched on. If you suspect interference, switch off your device, and move it.

Hearing aids. Some digital wireless devices may interfere with some hearing aids. If interference occurs, consult your service provider.

Vehicles

RF signals may affect improperly installed or inadequately shielded electronic systems in motor vehicles such as electronic fuel injection systems, electronic antiskid (antilock) braking systems, electronic speed control systems, and air bag systems. For more information, check with the manufacturer, or its representative, of your vehicle or any equipment that has been added. Only qualified personnel should service the device, or install the device in a vehicle. Faulty installation or service may be dangerous and may invalidate any warranty that may apply to the device. Check regularly that all wireless equipment in your vehicle is mounted and operating properly. Do not store or carry flammable liquids, gases, or explosive materials in the same compartment as the device, its parts, or enhancements. For vehicles equipped with an air bag, remember that air bags inflate with great force. Do not place objects, including installed or portable wireless equipment in the area over the air bag or in the air bag deployment area. If in-vehicle wireless equipment is improperly installed, and the air bag inflates, serious injury could result.

Using your device while flying in aircraft is prohibited. Switch off your device before boarding an aircraft. The use of wireless teledevices in an aircraft may be dangerous to the operation of the aircraft, disrupt the wireless telephone network, and may be illegal.

Potentially explosive environments

Switch off your device when in any area with a potentially explosive atmosphere and obey all signs and instructions. Potentially explosive atmospheres include areas where you would normally be advised to turn off your vehicle engine. Sparks in such areas could cause an explosion or fire resulting in bodily injury or even death. Switch off the device at refueling points such as near gas pumps at service stations. Observe restrictions on the use of radio equipment in fuel depots, storage, and distribution areas; chemical plants; or where blasting operations are in progress. Areas with a potentially explosive atmosphere are often, but not always, clearly marked. They include below deck on boats, chemical transfer or storage facilities, vehicles using liquefied petroleum gas (such as propane or butane), and areas where the air contains chemicals or particles such as grain, dust or metal powders.

Hearing Protection

To protect your hearing, follow these instructions.

- Increase the volume gradually until you can hear clearly and comfortably.
- Do not increase the volume level after your ears have adjusted.
- Do not listen to music at high volumes for extended periods.
- Do not increase the volume to block out noisy surroundings.
- Decrease the volume if you can't hear people speaking near you.

Disposal instructions

Do not throw this electronic device into the trash when discarding. To minimize pollution and ensure utmost protection of the global environment, please recycle. For more information on the Waste from Electrical and Electronics Equipment (WEEE) regulations, visit http://global.acer.com/about/sustainability.htm.

Mercury advisory

For projectors or electronic products containing an LCD/CRT monitor or display:

Lamp(s) inside this product contain mercury and must be recycled or disposed of according to local, state or federal laws. For more information, contact the Electronic Industries Alliance at www.eiae.org. For lamp-specific disposal information, check www.lamprecycle.org.

First things first

Usage Notes

Do:

- Turn off the product before cleaning.
- Use a soft cloth moistened with mild detergent to clean the display housing.
- Disconnect the power plug from AC outlet if the product is not being used for a long period of time.

Don't:

- Block the slots and openings on the unit provided for ventilation.
- Use abrasive cleaners, waxes or solvents to clean the unit.
- Use under the following conditions:
  - In extremely hot, cold or humid environments.
  - In areas susceptible to excessive dust and dirt.
  - Near any appliance that generates a strong magnetic field.
  - Place in direct sunlight.

Precautions

Follow all warnings, precautions and maintenance as recommended in this user's guide to maximize the life of your unit.

Warning:

- Do not look into the projector's lens when the lamp is on. The bright light may hurt your eyes.
- To reduce the risk of fire or electric shock, do not expose this product to rain or moisture.
- Please do not open or disassemble the product as this may cause electric shock.
- When changing the lamp, please allow unit to cool down, and follow all changing instructions.
- This product will detect the life of the lamp itself. Please be sure to change the lamp when it shows warning messages.
- Reset the "Lamp Hour Reset" function from the onscreen display "Management" menu after replacing the lamp module.
- When switching the projector off, please ensure the projector completes its cooling cycle before disconnecting power.
- Turn on the projector first and then the signal sources.
- Do not use lens cap when projector is in operation.
- When the lamp reaches the end of its life, it will burn out and may make a loud popping sound. If this happens, the projector will not turn back on until the lamp module has been replaced. To replace the lamp, follow the procedures listed under "Replacing the Lamp".

Contents

Information for your safety and comfort iii

First things first x

Usage Notes x

Precautions x

Introduction 1

Product Features 1

Contents 2

Projector Overview 3

Projector Outlook 3

Control Panel 4

Remote Control Layout 5

Getting Started 7

Connecting the Projector 7

Turning the Projector On/Off 8

Turning On the Projector 8

Turning Off the Projector 9

Adjusting the Projected Image 10

Adjusting the Height of Projected Image 10

How to Optimize Image Size and Distance 11

How to Get a Preferred Image Size by Adjusting Distance and Zoom 13

User Controls 15

Acer Empowering Technology 15

Onscreen Display (OSD) Menus 16

Color Setting 17

Image Setting 18

Management Setting 20

Audio Setting 23

Language Setting 24

Appendices 25

Troubleshooting 25

LED & Alarm Definition Listing 29

Replacing the Lamp 30
Ceiling Mount Installation 31
Specifications 34
Compatibility Modes 36
Regulations and Safety Notices 41

Introduction

Product Features

This product is a single-chip DLP® projector. Outstanding features include:

- DLP® technology
- P5260E/P5260EP: Native 1024 x 768 XGA resolution

  P1165E/P1165EP: Native 800 x 600 SVGA resolution

  4:3 / 16:9 aspect ratio supported
- ColorBoost technology provides optimized colour performance that delivers vivid and life-like pastel images
- An outstanding brightness level of 2800 ANSI Lumens and a 2100:1 contrast ratio
- Versatile display modes (Bright, Standard, Video, Blackboard, User 1, User 2) for optimum performance in any situation
- NTSC/PAL/SECAM compatible and HDTV (720p, 1080i) supported
- Top-loading lamp location for easy lamp replacement
- Lower power consumption and economy (ECO) mode extends lamp life to 5000 hours
- The EMPOWERING KEY reveals Acer Empowering functions (eView, eTimer, eOpening) for easy adjustment of settings
- P5260E/P5260EP: Equipped with DVI and HDMI™ connection supporting HDCP

  P1165E/P1165EP: Equipped with DVI connection supporting HDCP
- Advanced digital keystone correction delivers optimum presentations
- Multi-language onscreen display (OSD) menus
- Full-function remote control
- Manual focus projection lens zooms up to 1.1x
- 2x digital zoom and pan function
- Microsoft® Windows® 2000, XP, Vista OS compliant

Contents

This projector comes with all the items shown below. Check to make sure your unit is complete. Contact your dealer immediately if anything is missing.

Projector with lens cap

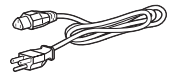

Power cord

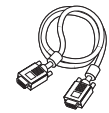

VGA cable

Composite video cable

2 x batteries

Carrying case

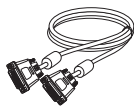

DVI-D cable
(P5260E Series)

Security card

User's Guide

Remote control

Quick start guide

Projector Overview

Projector Outlook

Front / upper side

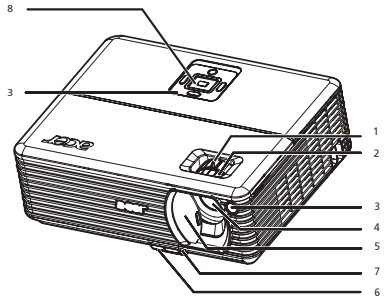

#	Description	#	Description
1	Zoom ring	5	Lens cap
2	Focus ring	6	Elevator button
3	Remote control receiver	7	Elevator foot
4	Zoom lens	8	Control panel

Rear side

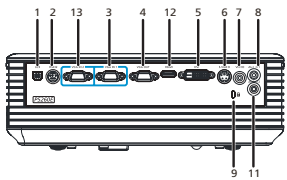

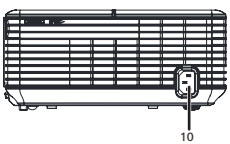

#	Description	#	Description
1	USB connector	8	Audio input connector (1)
2	RS232 connector	9	Kensington lock port
3	PC analog signal/HDTV/Component video input connector (1)	10	Power socket
4	Monitor loop-through output connector (VGA-Out)	**Below items are for P5260E/P5260EP series only:**	
5	DVI input connector (for digital signal with HDCP function)	11	Audio input connector (2)
6	S-Video input connector	12	HDMI connector
7	Composite video input connector	13	PC analog signal/HDTV/Component video input connector (2)

Control Panel

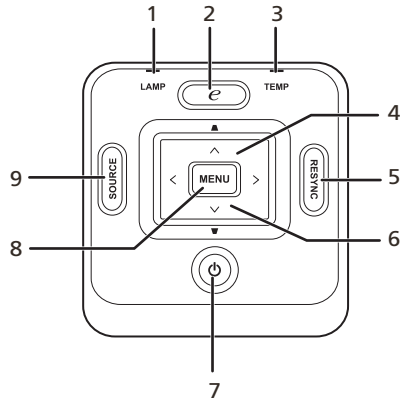

#	Function	Description
1	LAMP	Lamp Indicator LED
2	EMPOWERING KEY	Unique Acer functions: eOpening, eView, eTimer Management.
3	TEMP	Temp Indicator LED
4	Keystone	Adjusts the image to compensate for distortion caused by tilting the projector (±40 degrees).
5	RESYNC	Automatically synchronizes the projector to the input source.
6	Four directional select keys	Use ▲ ▼ ◀ ▶ to select items or make adjustments to your selection.
7	POWER	See the contents in "**Turning the Projector On/Off**" section.
8	MENU	• Press "**MENU**" to launch the onscreen display (OSD) menu, back to the previous step for the OSD menu operation or exit the OSD menu. • Confirm your selection of items.
9	SOURCE	Press "**SOURCE**" to choose RGB, Component, S-Video, Composite, DVI, HDTV and HDMI sources.

Remote Control Layout

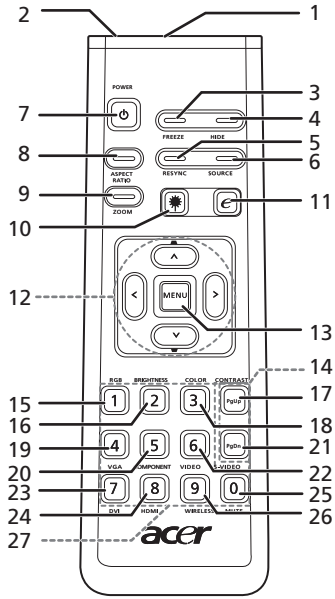

#	Icon	Function	Description
1		Infrared transmitter	Sends signals to the projector.
2		Laser pointer	Aim the remote at the viewing screen.
3		FREEZE	To pause the screen image.
4		HIDE	Momentarily turns off the video. Press "**HIDE**" to hide the image; press again to display the image.
5		RESYNC	Automatically synchronizes the projector to the input source.
6		SOURCE	Press "**SOURCE**" to choose from RGB, Component-p, Component-i, S-Video, Composite, DVI-D, Video and HDTV sources.
7		POWER	Refer to the "**Turning the Projector On/Off**" section.
8		ASPECT RATIO	To choose your desired aspect ratio (Auto/4:3/16:9).
9		ZOOM	Zooms the projector display in or out.
10		Laser button	Aim the remote at the viewing screen, press and hold this button to activate the laser pointer. This function is not supported in Japanese market.
11		EMPOWERING KEY	Unique Acer functions: eOpening, eView, eTimer Management.
12		KEYSTONE Four directional select keys	Adjusts the image to compensate for distortion caused by tilting the projector (±40 degrees). Use up, down, left, right buttons to select items or make adjustments to your selection

#	Icon	Function	Description
13		MENU	• Press "**MENU**" to launch the onscreen (OSD) menu, back to the previous step for the OSD menu operation or exit the OSD menu. • Confirm your selection of items.
14		PAGE	For computer mode only. Use this button to select the next or previous page. This function is only available when connected to a computer via a USB cable.
15		RGB	Toggle "**RGB**" to adjust the red/green/blue color.
16		BRIGHTNESS	Press "**BRIGHTNESS**" to adjust the brightness of the image.
17		CONTRAST	Use the "**CONTRAST**" option to control the difference between the lightest and darkest parts of the picture.
18		COLOR	Press "**COLOR**" to adjust the color temperature of image.
19		VGA	Press "**VGA**" to change source to the VGA connector. This connector supports analog RGB, YPbPr (480p/576p/720p/1080i), YCbCr (480i/576i) and RGBsync.
20		COMPONENT	Press "**COMPONENT**" to change source to Component video. This connection supports YPbPr (480p/576p/720p/1080i) and YCbCr (480i/576i).
21		S-VIDEO	To change source to S-Video.
22		VIDEO	To change source to COMPOSITE VIDEO.
23		DVI	Press "**DVI**" to change source to DVI. This connection supports digital RGB, analog RGB, YPbPr (480p/576p/720p/1080i), YCbCr (480i/576i) and HDCP signals.
24		HDMI™	Change the video source to HDMI™. (for model if with the HDMI™ connector)
25		MUTE	To turn on/off the volume.
26		WIRELESS	This function is not available for this model.
27		KeyPad 0~9	Press "**0~9**" to input a password in the "Security settings".

Note:

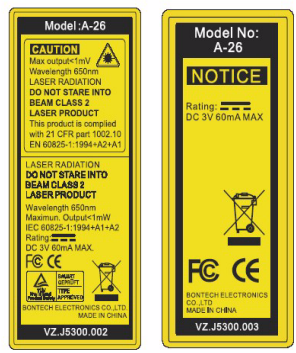

Getting Started

Connecting the Projector

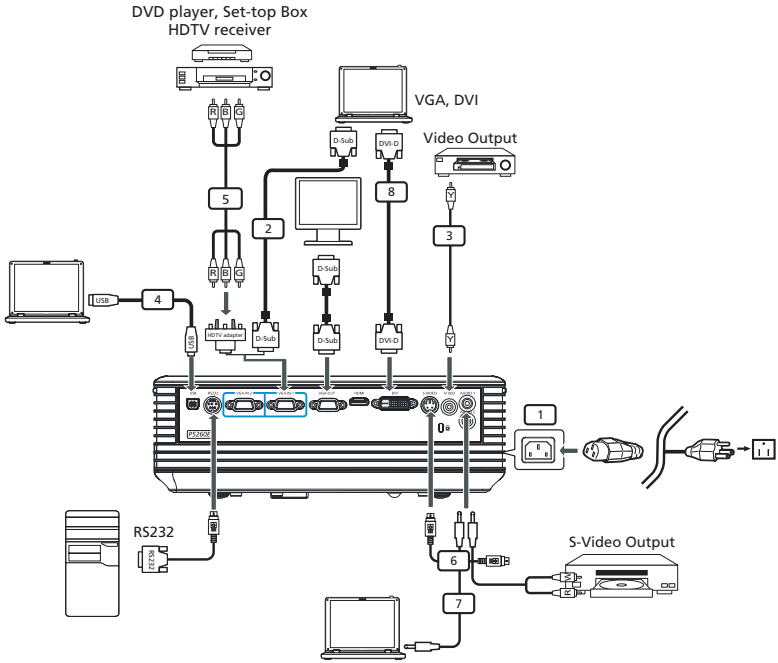

#	Description	#	Description
1	Power cord	6	S-Video cable
2	VGA cable	7	Audio cable
3	Composite video cable	8	DVI cable
4	USB cable	9	HDMI cable (P5260E/P5260EP series)
5	VGA to component/HDTV adapter		

Note: To ensure the projector works well with your computer, please make sure the timing of the display mode is compatible with the projector.

Turning the Projector On/Off

Turning On the Projector

1 Slide on the lens door.

2 Ensure that the power cord and signal cable are securely connected. The Power LED will flash red.

3 Turn on the lamp by pressing "**Power**" button on the control panel, and the Power LED will turn blue.

4 Turn on your source (computer, notebook, video player ,etc.). The projector will detect your source automatically.

- If the screen displays "Lock" & "Source" icons, it means the projector locks on this source type and there is no such type of input signal found.
- If the screen displays "No Signal", please make sure the signal cables are securely connected.
- If you connect multiple sources at the same time, using the "**Source**" button on either control panel or the remote control or direct source key on the remote control to switch between inputs.

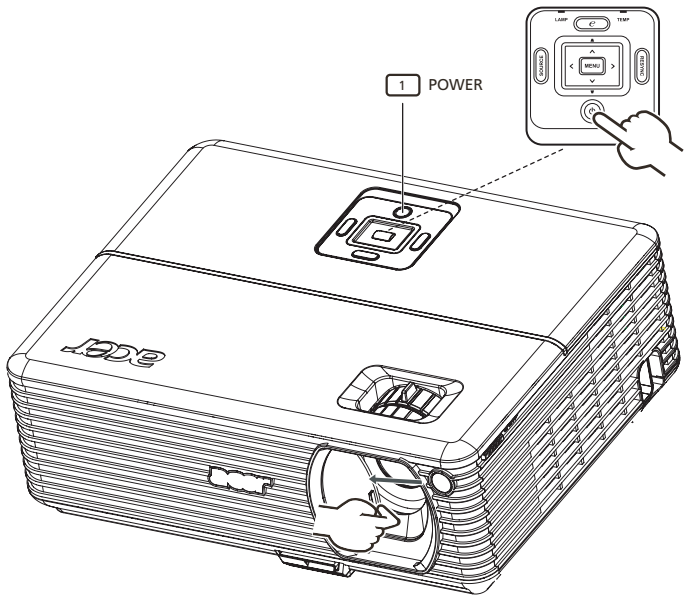

Turning Off the Projector

1 To turn off the projector press the "**Power**" button twice. The message below will display onscreen for 5 seconds.
"**Please press power button again to complete the shutdown process.**"

2 Immediately after powering off, the Power indicator LED will flash RED rapidly and the fan(s) will continue to operate for about 120 seconds. This is to ensure that the system cools correctly.

3 Once the system has finished cooling, the "**Power**" indicator LED will turn solid RED which means the projector enter standby mode.

4 It is now safe to unplug the power cord.

Warning: Do not turn on the projector immediately after powering off.

Note: If you wish to turn the projector back on, you must wait for 60 seconds at least to press the "**Power**" button to restart the projector.

Warning indicators:

- If the projector automatically shuts down and the **LAMP** indicator turns solid RED, please contact your local reseller or service center.
- If the projector automatically shuts down and the **TEMP** indicator turns solid RED, this indicates that the projector has overheated. The message below will display onscreen if this is about to happen:

  "**Projector Overheated. Lamp will automatically turn off soon.**"
- If the **TEMP** indicator flashes RED and the message below is displayed onscreen, please contact your local dealer or service center:

  "**Fan fail. Lamp will automatically turn off soon.**"

Adjusting the Projected Image

Adjusting the Height of Projected Image

The projector is equipped with elevator feet for adjusting the height of image.

To raise the image:

1 Press the elevator foot release. (Illustration #1)

2 Raise the image to the desired height angle (Illustration #2) , then release the button to lock the elevator foot into position.

3 Use Tilt adjusting wheel (Illustration #3) to fine-tune the display angle.

To lower the image:

1 Press the elevator foot release. (Illustration #1)

2 Lower the image to the desired height angle (Illustration #2) , then release the button to lock the elevator foot into position.

3 Use Tilt adjusting wheel (Illustration #3) to fine-tune the display angle.

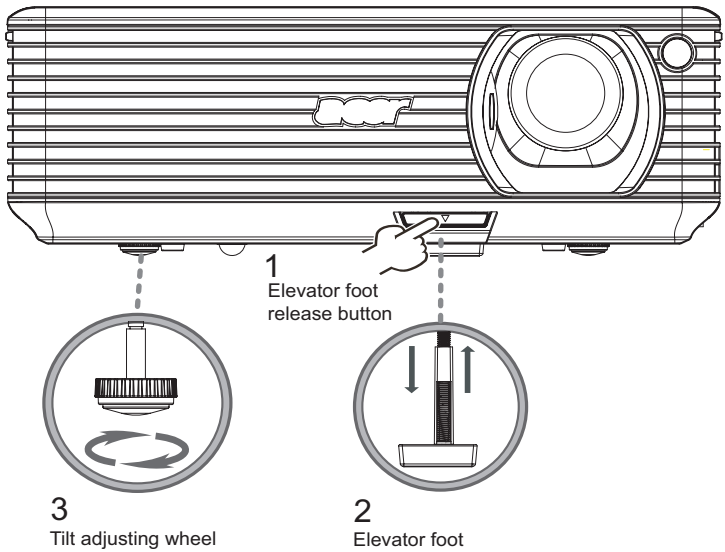

How to Optimize Image Size and Distance

Consult the table below to find the optimal image sizes achievable when the projector is positioned at a desired distance from the screen. Example: If the projector is 3 m from the screen, good image quality is possible for image sizes between 68" and 75".

Note: Remind as below figure, the space of 131 cm height is required when located at 3m distance.

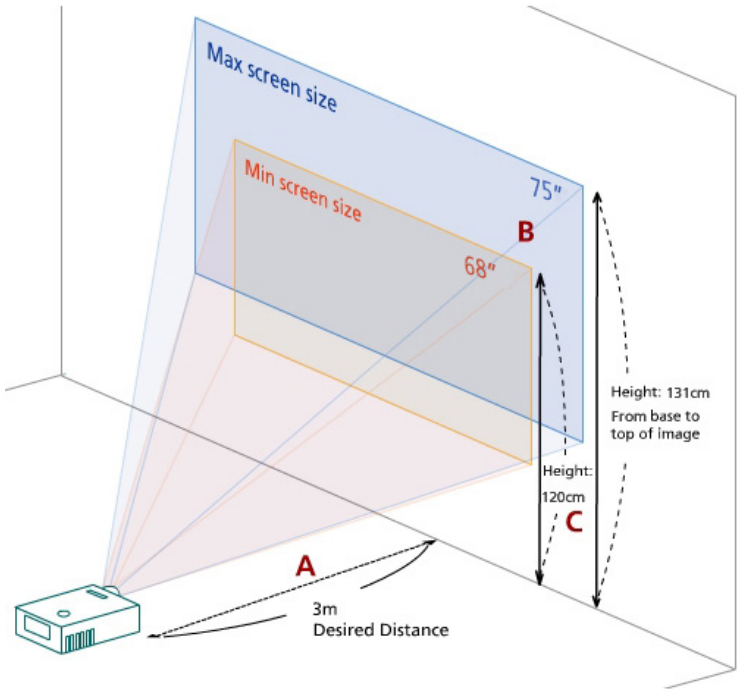

Figure: Fixed distance with different zoom and screen size.

Desired Distance (m) < **A** >	Minimum Screen Size (Min zoom)			Maximum Screen Size (Max zoom)		
	Diagonal (inch) < **B** >	W (cm) x H (cm)	From base to top of image (cm) < **C** >	Diagonal (inch) < **B** >	W (cm) x H (cm)	From base to top of image (cm) < **C** >
1.5	34	69 x 52	60	37	76 x 57	66
2	46	93 x 69	80	50	102 x 76	88
2.5	57	116 x 87	100	62	127 x 95	109
3	68	139 x 104	120	75	152 x 114	131
3.5	80	162 x 122	140	87	178 x 133	153
4	91	185 x 139	160	100	203 x 152	175
4.5	103	208 x 156	180	112	228 x 171	197
5	114	231 x 174	200	125	254 x 190	219
6	137	278 x 208	240	150	305 x 228	263
7	159	324 x 243	280	175	355 x 266	306
8	182	370 x 278	319	200	406 x 305	350
9	205	417 x 313	359	225	457 x 343	394
10	228	463 x 347	399	250	508 x 381	438
11	251	509 x 382	439	275	558 x 419	482
12	273	556 x 417	479	300	609 x 457	525

Zoom Ratio: 1.1x

How to Get a Preferred Image Size by Adjusting Distance and Zoom

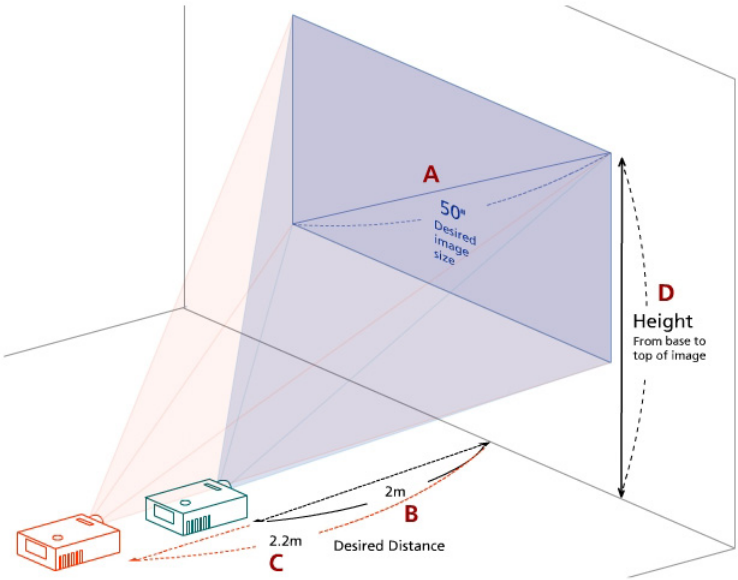

The table below shows how to achieve a desired image size by adjusting either the position or the zoom ring. Example: To obtain an image size of 50", set the projector at a distance between 2 m and 2.2 m from the screen and adjust the zoom level accordingly.

Desired Image Size		Distance (m)		Top (cm)
Diagonal (inch) < **A** >	W (cm) x H (cm)	Max zoom < **B** >	Min zoom < **C** >	From base to top of image < **D** >
30	61 x 46	1.2	1.3	53
40	81 x 61	1.6	1.8	70
50	102 x 76	2.0	2.2	88
60	122 x 91	2.4	2.6	105
70	142 x 107	2.8	3.1	123
80	163 x 122	3.2	3.5	140
90	183 x 137	3.6	4.0	158
100	203 x 152	4.0	4.4	175
120	244 x 183	4.8	5.3	210
150	305 x 229	6.0	6.6	263
180	366 x 274	7.2	7.9	315
200	406 x 305	8.0	8.8	351
250	508 x 381	10.0	11.0	438
300	610 x 457	12.0		526

Zoom Ratio: 1.1x

User Controls

Acer Empowering Technology

EMPOWERING KEY	Acer EMPOWERING KEY provides three Acer unique functions, they are "Acer eView Management", "Acer eTimer Management" and "Acer eOpening Management" respectively. Press " " key for more than one second to launch the onscreen display main menu to modify its function.
Acer eView Management 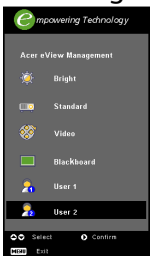	Press " " to launch "Acer eView Management" submenu. "Acer eView Management" is for display mode selection. Please refer to "Onscreen Display (OSD) Menus" section for more detail.
Acer eTimer Management	Press " " to launch "Acer eTimer Management" submenu. "Acer eTimer Management" provides the reminding function for presentation time control. Please refer to "Onscreen Display (OSD) Menus" section for more detail.
Acer eOpening Management	Press " " to launch "Acer eOpening Management" submenu. "Acer eOpening Management" allows user to change the Startup screen to their personalized image. Please refer to "Onscreen Display (OSD) Menus" section for more detail.

Onscreen Display (OSD) Menus

The Projector has multilingual OSD that allow you to make image adjustments and change a variety of settings.

Using the OSD menus

- To open the OSD menu, press "**MENU**" on the remote control or control panel.
- When the OSD is displayed, use the ▲▼ keys to select any item in the main menu. After selecting the desired main menu item, press ▶ to enter submenu for feature setting.
- Use the ▲▼ keys to select the desired item and adjust the settings by using the ◀▶ keys.
- Select the next item to be adjusted in the submenu and adjust as described above.
- Press "**MENU**" on the remote control or control panel, the screen will return to the main menu.
- To exit OSD, press "**MENU**" on the remote control or control panel again. The OSD menu will close and the projector will automatically save the new settings.

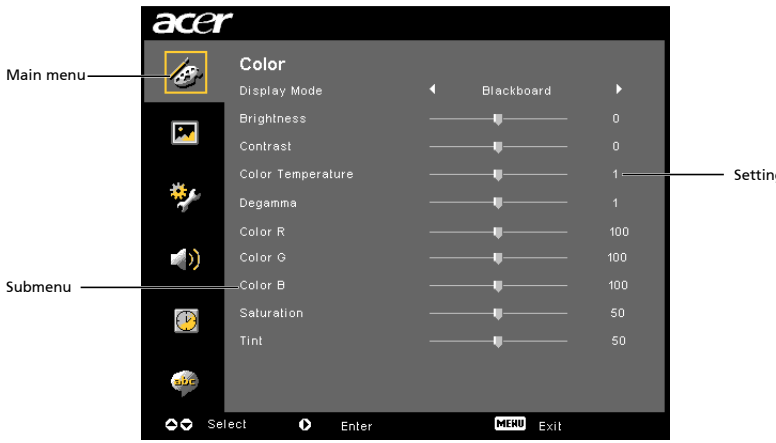

Color Setting

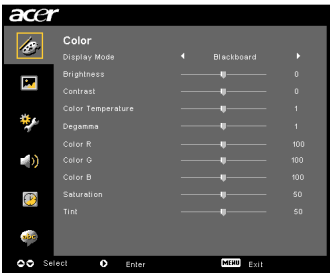

Display Mode	There are many factory presets optimized for various types of images. • Bright: For brightness optimization. • Standard: For true-color optimization. • Video: For playing video in a bright environment. • Blackboard: Blackboard mode can improve displayed color when you project onto darker surfaces. • User 1: Memorize user's settings. • User 2: Memorize user's settings
Brightness	Adjusts the brightness of the image. • Press ◀ to darken image. • Press ▶ to lighten the image.
Contrast	"Contrast" controls the difference between the lightest and darkest parts of the picture. Adjusting the contrast changes the amount of black and white in the image. • Press ◀ to decrease the contrast. • Press ▶ to increase the contrast.
Color Temperature	Adjusts the color temperature. At higher color temperatures, the screen looks colder; at lower color temperatures, the screen looks warmer.
Degamma	Effects the representation of dark scenery. With greater gamma value, dark scenery will look brighter.
Color R	Adjusts the red color.
Color G	Adjusts the green color.
Color B	Adjusts the blue color.
Saturation	Adjusts a video image from black and white to fully saturated color. • Press ◀ to decrease the amount of color in the image. • Press ▶ to increase the amount of color in the image.

Tint	Adjusts the color balance of red and green. • Press ◀ to increase the amount of green in the image. • Press ▶ to increase the amount of red in the image.

Note: "Saturation" and "Tint" functions are not supported under computer mode or DVI mode.

Image Setting

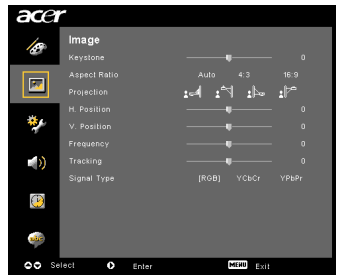

Keystone	Adjusts image distortion caused by tilting projection. (±40 degrees)
Aspect Ratio 	Use this function to choose your desired aspect ratio. • Auto: Keep the image with original width-higth ratio and maximize the image to fit native horizontal or vertical pixels. • 4:3: The image will be scaled to fit the screen and displayed using a 4:3 ratio. • 16:9: The image will be scaled to fit the width of the screen and the height adjusted to display image using a 16:9 ratio.
Projection 	Front-Desktop • The factory default setting.
	Front-Ceiling • When you select this function, the projector inverts the image for ceiling-mounted projection.

	Rear-Desktop • When you select this function, the projector reverses the image so you can project behind a translucent screen.
	Rear-Ceiling • When you select this function, the projector reverses and inverts the image at same time. You can project from behind a translucent screen with ceiling mounted projection.
H. Position (Horizontal Position)	• Press ◀ to move the image left. • Press ▶ to to move the image right.
V. Position (Vertical Position)	• Press ◀ to move the image down. • Press ▶ to move the image up.
Frequency	"Frequency"changes the projector's refresh rate to match the frequency of your computer's graphic card. If you can see a vertical flickering bar in the projected image, use this function to make an adjustment.
Tracking	Synchronizes the signal timing of the display with the graphic card. If you experience an unstable or flickering image, use this function to correct it.
Sharpness	Adjusts the sharpness of the image. • Press ◀ to decrease the sharpness. • Press ▶ to increase the sharpness.

Note: "H. Position", "V. Position", "Frequency" and "Tracking" functions are not supported under DVI and Video mode.
Note: "Sharpness" functions is not supported under DVI and Computer mode.

Management Setting

ECO Mode	Choose “On” to dim the projector lamp which will lower power consumption, extend the lamp life and reduce noise. Choose ”Off” to return normal mode.
Auto Shutdown (Minutes)	The projector will auto shutdown while there is no signal input after the allocated time. (in minutes)
Source Lock	When source lock is turned "Off", the projector will search for other signals if the current input signal is lost. When source lock is turned "On", it will “Lock” the current source channel unless you press “**SOURCE**” button on the remote control for next channel.
Menu Location	Choose the Menu location on the display screen
Startup Screen	Use this function to select your desired startup screen. If you change the setting, the changes will take effect when you exit the OSD menu. • Acer: The default startup screen of Acer projector. • User: Use memorize picture from "Screen Capture" function.
Screen Capture 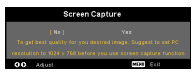 	Use this function to customize the startup screen. To capture the image that you want to use as the startup screen, follow the instructions below. Notice: Before proceeding with the following steps, make sure that the "Keystone" is set to the default value 0 and the aspect ration is set to 4:3. For details, refer to the "Image Setting" section. • Change the "Startup Screen" from the default setting "Acer" to "User". • Press "Screen Capture" to customize the startup screen. • A dialog box appears to confirm the action. Choose "Yes" to use the current image as your customized startup screen. The capture range is the red rectangular area. Choose "No" to cancel the screen capture and exit the onscreen display (OSD). • A message appears, stating that the screen capture is in progress. • When the screen capture is finished, the message disappears and the original display is shown. • The customized startup screen, as shown below, take effect when there is a new input signal or when you restart the projector.

	Note: This screen capture function is limited by 4:3 aspect ratio only. **Note:** For XGA models, to get best quality for you desired image, suggest end-user set PC resolution to 1024 x 768 before you use this function. **Note:** For SVGA models, to get best quality for you desired image, suggest end-user set PC resolution to 800 x 600 before you use this function.
Lamp Hour Elapse	Displays the lamp's elapsed operating time (in hours).
Lamp Reminding	Activate this function to display a reminder to change the lamp 30 hours before its expected end-of-life.
Lamp Hour Reset	Press ▶ after choosing "Yes" to turn the lamp hour counter to 0 .
Security 	**Security** This projector provides an excellent security function for the administrator to manage usage of the projector. Press ▶ to change the "Security" setting. If the security function is enabled, you must enter "Administrator Password" first before changing the security settings. • Select "On" to enable the security function. The user has to enter a password to operate the projector. Please refer to "User Password" section for details. • If "Off"is selected, then the user can turn on the projector without password.
 	Timeout(Min.) Once "Security" is activated to "On", the administrator can set timeout function. • Press ◀ or ▶ to select timeout interval. • The range is from 10 minutes to 990 minutes. • When the time is up, the projector will prompt the user to enter the password again. • The factory default setting of "Timeout(Min.)" is "Off". • Once the security function is enabled, the projector will request user to enter password when switch on the projector . Both "User Password" and "Administrator Password" can be accepted for this dialogue.

 	User Password • Press ▶ to setup or change the "User Password". • Press number keys to set your password on the remote control and press "**MENU**" to confirm. • Press ◀ to delete character. • Enter the password when you see "Confirm Password" displayed. • The password should be between 4 and 8 characters long. • If you select "Request password only after plugging power cord", the projector will prompt the user to enter the password every time the power cord is plugged. • If you select "Always request password while projector turns on", the user has to enter the password every time when the projector is turned on.
	Administrator Password The "Administrator Password" can be used by both "Enter Administrator Password" and "Enter Password" dialog boxes. • Press ▶ to change the "Administrator Password". • The factory default of "Administrator Password" is "1234". If you forgot your administrator password, do the following to retrieve the administrator Password: • An unique 6-digit "Universal Password" which is printed on the Security Card (please check accessory in the box). This unique password is the number wihch will be accepted by projector anytime no matter what the Administaror Password is. • If losing this securiy card and number, please contact with an Acer service center.
	Lock User Startup Screen • Default Lock User Startup Screen is "Off". If lock user startup screen is "On", users cannot change the startup screen anymore and avoid the other users change that arbitrarily. Choose "Off" to unlock startup screen.
Reset	• Press ▶ after choosing "Yes" to return the parameters on all menus to the factory default settings.

Audio Setting

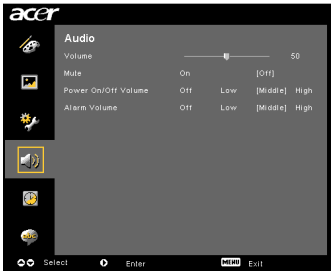

Volume	• Press ◀ to decrease the volume. • Press ▶ to increase the volume.
Mute	• Choose "On" to mute the volume. • Choose "Off" to restore the volume.
Power On/Off Volume	• Select this function to adjust the notification volume when turning the projector on/off.
Alarm Volume	• Select this function to adjust volume of any warning notifications.

Timer Setting

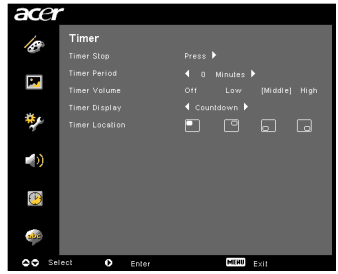

Timer Start	• Press ▶ to start or stop the timer.
Timer Period	• Press ◀ or ▶ to adjust the timer period.
Timer Volume	• Select this function to adjust notification volume when the timer function is enabled and time is up.
Timer Display	• Press ◀ or ▶ to which timer mode to display on the screen.
Timer Location	• Choose the location of the timer on the screen.

Language Setting

Language	Choose the multilingual OSD menu . Use ▲ ▼ to select your preferred menu language. • Press ▶ to confirm the selection.

Appendices

Troubleshooting

If you experience a problem with your Acer projector, refer to the following troubleshooting guide. If the problem persists, please contact your local reseller or service center.

Image Problems and Solutions

#	Problem	Solution
1	No image appears onscreen	• Connected as described in the "Installation" section. • Ensure none of the connector pins are bent or broken. • Check if the projection lamp has been securely installed. Please refer to the "Replacing the Lamp" section. • Make sure you have slid on the lens door and the projector is turned on.

2	Partial, scrolling or incorrectly displayed image(For PC (Windows 95/98/ 2000/XP))	• Press "**RESYNC**" on the remote control or control panel.
		• For an incorrectly displayed image:
		  • Open "My Computer", open the "Control Panel", and then double-click the "Display" icon.
		  • Select the "Settings" tab.
		  • Verify that your display resolution setting is lower than or equal to UXGA (1680 x 1050) (P5260E/P5260EP series) or WXGA+ (1400 x 900) (P1165E/P1165EP series).
		  • Click the "Advanced Properties" button.
		If the problem still appears, change the monitor display you are using and follow the steps below:
		  • Verify that the resolution setting is lower than or equal to UXGA (1680 x 1050) (P5260E/ P5260EP series) or WXGA+ (1400 x 900) (P1165E/P1165EP series).
		  • Click the "Change" button under the "Monitor" tab.
		  • Click "Show all devices". Next, select "Standard monitor types" under the SP box, and choose the resolution mode you need under the "Models" box.
		  • Verify that the resolution setting of the monitor display is lower than or equal to UXGA (1680 x 1050) (P5260E/P5260EP series) or WXGA+ (1400 x 900) (P1165E/P1165EP series).

3	Partial, scrolling or incorrectly displayed image (For notebooks)	• Press "**RESYNC**" on the remote control or control panel.
		• For an incorrectly displayed image:
		  • Follow the steps for item 2 (above) to adjust the resolution of your computer.
		  • Press the respective button to toggle output settings. Example: [Fn]+[F4], Compaq [Fn]+[F4], Dell [Fn]+[F8], Gateway [Fn]+[F4], IBM [Fn]+[F7], HP [Fn]+[F4], NEC [Fn]+[F3], Toshiba [Fn]+[F5]
		• If you experience difficulty changing resolutions or your monitor freezes, restart all equipment including the projector.

4	The screen of the notebook computer is not displaying your presentation	• If you are using a Microsoft® Windows® based notebook: Some notebook PCs may deactivate their own screens when a second display device is in use. Each has a different way to be reactivated. Refer to your computer's manual for detailed information. • If you are using an Apple® Mac® OS based notebook: In System Preferences, open Display and select Video Mirroring "On".
5	Image is unstable or flickering	• Use "Tracking" to correct it. Refer to the "Image Setting" section for more information. • Change the display color depth settings on your computer.
6	Image has vertical flickering bar	• Use "Frequency" to make an adjustment. Refer to the "Image Setting" section for more information. • Check and reconfigure the display mode of your graphics card to make it compatible with the projector.
7	Image is out of focus	• Make sure the lens door is slid on. • Adjusts the focus ring on the projector lens. • Make sure the projection screen is within the required distance of 3.3 to 39.4 feet (1.0 to 12.0 meters) from the projector. Refer to the "How to Get a Preferred Image Size by Adjusting Distance and Zoom" section for more information.

8	Image is stretched when displaying a "widescreen" DVD title	When you play a DVD encoded in anamorphic or 16:9 aspect ratio you may need to adjust the following settings: • If you play an Letterbox(LBX) format DVD title, please change the format to Letterbox(LBX) in the projector OSD. • If you play a 4:3 format DVD title, please change the format to 4:3 in the projector OSD. • If the image is still stretched, you will also need to adjust the aspect ratio. Set up the display format to 16:9 (wide) aspect ratio on your DVD player.
9	Image is too small or too large	• Adjust the zoom lever on the top of the projector. • Move the projector closer to or further from the screen. • Press "**MENU**" on the remote control or no the control panel. Go to "Image setting --> Aspect Ratio" and try different settings.
10	Image has slanted sides	• If possible, reposition the projector so that it is centered on the screen. • Press the "Keystone ⏢ / ⏢" button on the control panel or the remote control until the sides are vertical.
11	Image is reversed	• Select "Image --> Projection" on the OSD and adjust the projection direction.

Problems with the Projector

#	Condition	Solution
1	The projector stops responding to all controls	If possible, turn off the projector, then unplug the power cord and wait at least 30 seconds before reconnecting power.
2	Lamp burns out or makes a popping sound	When the lamp reaches the end of its useful life, it will burn out and may make a loud popping sound. If this happens, the projector will not turn on until the lamp module has been replaced. To replace the lamp, follow the procedures in the "Replacing the Lamp" section.

OSD Messages

#	Condition	Message Reminder
1	Message	Fan Fail - the system fan is not working. Fan Fail. Lamp will automatically turn off soon. Projector Overheated - the projector has exceeded its recommended operating temperature and must be allowed to cool down before it may be used. Projector Overheated. Lamp will automatically turn off soon. Replace the lamp - the lamp is about to reach its maximum lifetime. Prepare to replace it soon. Replacement suggested! Lamp is approaching the end of its useful life in full power operation.

LED & Alarm Definition Listing

LED Messages

Message	Lamp LED	Temp LED	Power LED	
	Red	Red	Red	Blue
Standby (power cord plugged in)	--	--	V	--
Lamp retry	--	--	--	Quick flashing
Turning off (cooling state)	--	--	Quick flashing	--
Turning off (cooling completed)	--	--	V	--
Error (thermal failure)	--	--	--	V
Error (fan lock failure)	--	Quick flashing	--	V
Error (lamp breakdown)	V	--	--	V
Error (color Wheel fail)	Quick flashing	--	--	V

Replacing the Lamp

Use a screwdriver to remove the screw(s) from the cover, and then pull out the lamp.

The projector will detect the lamp life. It will be shown you a warning message "**Lamp is approaching the end of its useful life in full power operation. Replacement Suggested!**" When you see this message, change the lamp as soon as possible. Make sure the projector has been cooling down for at least 30 minutes before changing the lamp.

Warning: Lamp compartment is hot! Allow it to cool down before changing lamp!

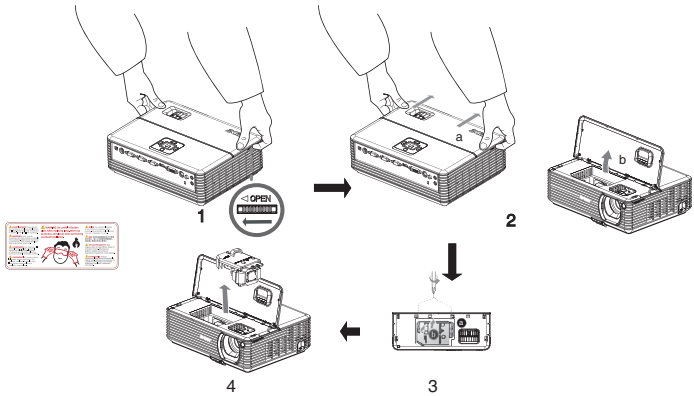

To change the Lamp

1 Turn off the projector by pressing the "**Power**" button.

2 Allow the projector at least 30 minutes to cool down.

3 Disconnect the power cord.

4 Place your hands on the top cover.

5 Find the "OPEN" buttons on both sides of the projector and push it at the same time. (Illustration #1)

6 Gently push the top cover out slightly and slide it away to open the top cover. (Illustration #2)

7 Remove the two screws that secure the lamp module and pull up the lamp bar. (Illustration #3)

8 Pull out the lamp module by force. (Illustration #4)

To replace the lamp module, reverse the previous step.

Warning: To reduce the risk of personal injury, do not drop the lamp module or touch the lamp bulb. The bulb may shatter and cause injury if it is dropped.

Ceiling Mount Installation

If you wish to install the projector using a ceiling mount, please refer to the steps below:

1 Drill four holes into a solid, structurally sound part of the ceiling, and secure the mount base.

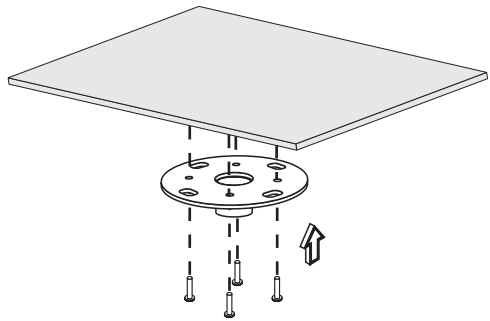

Note: Screws are not included. Please obtain the appropriate screws for your type of ceiling.

2 Secure the ceiling rod using the appropriate type of four-cylinder screws.

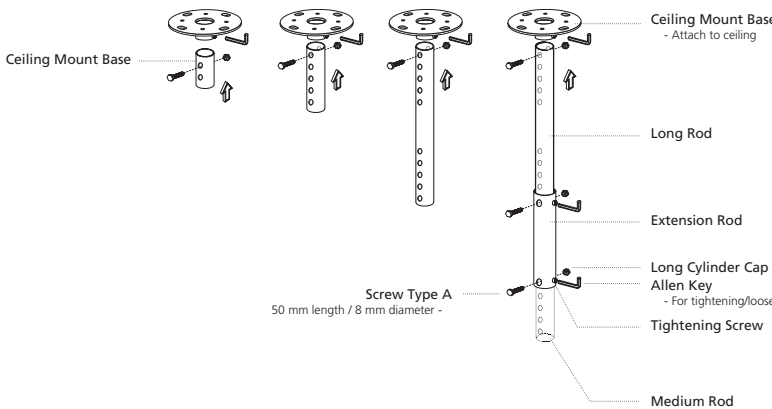

3 Use the appropriate number of screws for the projector size to attach the projector to the ceiling mount bracket.

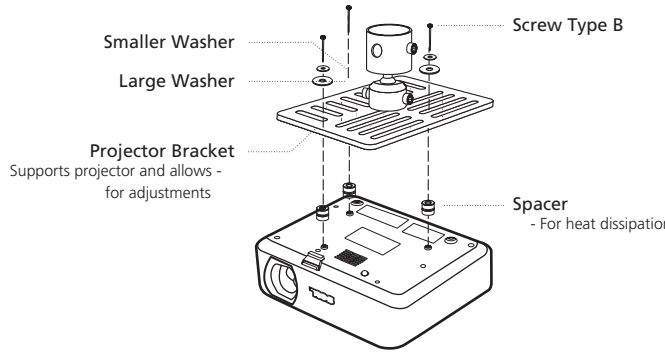

Note: It is recommended that you keep a reasonable space between the bracket and the projector to allow for proper heat distribution. Use two washers for extra support, if deemed necessary.

4 Attach the ceiling bracket to the ceiling rod.

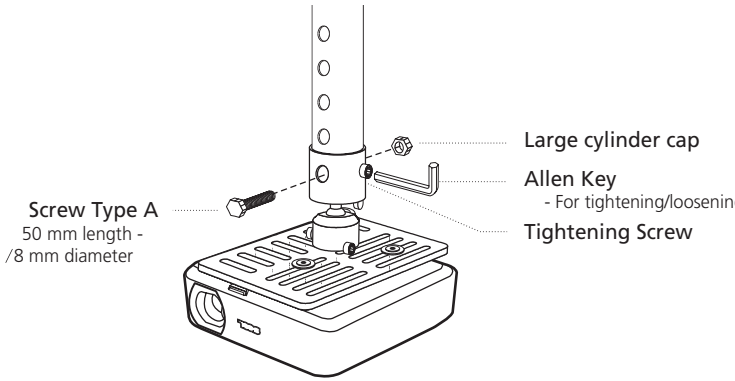

5 Adjust the angle and positioning as necessary.

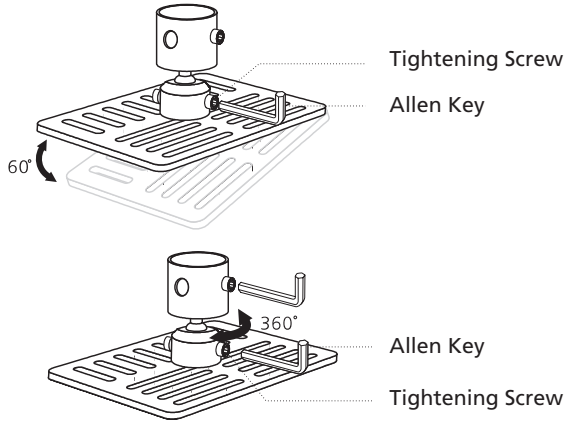

Note: The appropriate type of screw and washer for each model is listed in the table below. 3 mm diameter screws are enclosed in the screw pack.

Models	Screw Type B		Washer Type	
	Diameter (mm)	Length (mm)	Large	Small
P5260E/P5260EP	3	20	V	V
P1165E/P1165EP	3	20	V	V

Specifications

The specifications below are subject to change without notice. For final specs, please refer to Acer's marketing documentation.

Projection system	DLP™
Resolution	P5260E/P5260EP: Native: XGA (1024 x 768) Maximum: UXGA (1680 x 1050) P1165E/P1165EP: Native: SVGA (800 x 600) Maximum: WXGA+ (1440 x 900)
Brightness	P5260E/P5260EP: 2700/2800 ANSI Lumens P1165E/P1165EP: 2400/2500 ANSI Lumens
Computer compatibility	IBM PC and compatibles, Apple Macintosh, iMac and VESA standards: SXGA, SVGA, VGA (resizing)
Video compatibility	NTSC (3.58/4.43), PAL (B/D/G/H/I/M/N), SECAM (B/D/G/K/K1/L), HDTV (720p, 1080i), EDTV (480p, 576p), SDTV (480i, 576i)
Aspect ratio	4:3 (native), 16:9
Contrast ratio	2100:1
Displayable colors	16.7 million colors
Noise level	P5260E/P5260EP: 32 dBA (standard), 30 dBA (ECO) P1165E/P1165EP: 30 dBA (standard), 28 dBA (ECO)
Projection lens	F / 2.51 - 2.69, f = 21.95 mm - 24.18 mm with 1.1x manual zoom lens
Projection screen size (diagonal)	23" (0.58 m) - 300" (7.62 m)
Projection distance	3.3' m (1.0 m) - 39.4' m (12.0 m)
Throw ratio	50" @ 2 m (1.97 - 2.16:1)
Horizontal scan rate	31.5 - 100 kHz
Vertical refresh scan rate	56 - 85 Hz
Lamp type	P5260E/P5260EP: 230 W user-replaceable lamp P1165E/P1165EP: 200 W user-replaceable lamp
Lamp life	P5260E/P5260EP: 3000 hours (standard), 5000 hours (economy) P1165E/P1165EP: 3000 hours (standard), 4000 hours (economy)
Keystone correction	+/- 40 degrees
Audio	Internal speaker with 2 W output
Weight	2.8 kg (6.17 lbs.)
Dimensions (W x D x H)	300 x 228 x 100 mm (11.81 x 8.98 x 3.94 inches)
Remote control	Laser pointer function
Digital zoom	2x
Power supply	AC input 100 - 240 V, 50/60 Hz
Power consumption	P5260E/P5260EP: 280 W P1165E/P1165EP: 250 W
Operating temperature	5°C to 35°C / 41°F to 95°F
Uniformity	85%

I/O connectors	• Power socket x 1 • VGA input x 1 • Composite video x 1 • S-video x 1 • VGA output x 1 • DVI-D x 1: with HDCP support • 3.5 mm audio jack input x 1 • RS232 x 1 • USB x 1: for remote computer control **Below items are for P5260E/P5260EP series only:** • HDMI x 1 • VGA input x 2 • 3.5 mm audio jack input x 2
Standard package contents	• AC power cord x 1 • VGA cable x 1 • Composite video cable x 1 • DVI-D cable x 1 (P5260E/P5260EP series) • Remote control x 1 • Batteries x 2 (for remote control) • User's guide (CD-ROM) x 1 • Quick start guide x 1 • Security card x 1 • Carrying case x 1

* Design and specifications are subject to change without notice.

Compatibility Modes

A. VGA Analog

1 VGA Analog - PC Signal

Modes	Resolution	V.Frequency [Hz]	H.Frequency [KHz]
VGA	640x480	60	31.50
	640x480	72	37.90
	640x480	75	37.50
	640x480	85	43.30
	720x400	70	31.50
	720x400	85	37.90
SVGA	800x600	56	35.20
	800x600	60	37.90
	800x600	72	48.10
	800x600	75	46.90
	800x600	85	53.70
	832x624	75	49.725
XGA	1024x768	60	48.40
	1024x768	70	56.50
	1024x768	75	60.00
	1024x768	85	68.70
SXGA	1152x864	70	63.80
	1152x864	75	67.50
	1280x1024	60	63.98

Note: "*" Only for P5260E/ P5260EP series

	*1280x1024	75	79.98
	*1280x1024	85	91.10
QuadVGA	1280x960	60	59.70
	*1280x960	75	75.23
SXGA+	*1400x1050	60	63.98
UXGA	*1600x1200	60	75.00
Power Mac G4	640x480	66.6(67)	34.93
	800x600	60	37.90
	1024x768	60	48.40
	1152x870	75	68.68
	1280x960	75	75.00
	1280x1024	60	63.98
PowerBook G4	640x480	60	31.35
	640x480	66.6(67)	34.93
	800x600	60	37.90
	1024x768	60	48.40
	1152x870	75	68.68
	1280x960	75	75.00
	1280x1024	60	63.98
i Mac DV (G3)	1024x768	75	60.00

2 VGA Analog - Extended Wide timing

Modes	Resolution	V.Frequency [Hz]	H.Frequency [KHz]
WXGA	1280x768	60	48.36
	1280x768	75	57.60
	*1280x768	85	68.630

Note: "*" Only for P5260E/ P5260EP series

	1280x720	60	45.00
	1280x800	60	49.702
	1360x768	60	47.72
	*1440x900	60	55.935

B. DVI Digital

1 DVI - PC Signal

Modes	Resolution	V.Frequency [Hz]	H.Frequency [KHz]
VGA	640x480	60	31.50
	640x480	72	37.90
	640x480	75	37.50
	640x480	85	43.30
SVGA	800x600	56	35.20
	800x600	60	37.90
	800x600	72	48.10
	800x600	75	46.90
	800x600	85	53.70
	832x624	75	49.725
XGA	1024x768	60	48.40
	1024x768	70	56.50
	1024x768	75	60.00
	1024x768	85	68.70
SVGA	1152x864	70	63.80
	1152x864	75	67.50

Note: "*" Only for P5260E/ P5260EP series

	1152x864	85	77.10
	1280x1024	60	63.98
	*1280x1024	72	76.97
	*1280x1024	75	79.98
	*1280x1024	85	91.10
QuadVGA	1280x960	60	59.70
	*1280x960	75	75.23
SVGA+	*1400x1050	60	63.98
UXGA	*1600x1200	60	75.00
Power Mac G4	640x480	66.6(67)	34.93
	800x600	60	37.90
	1024x768	60	48.40
	1152x870	75	68.68
	1280x960	75	75.00
	1280x1024	60	63.98
PowerBook G4	640x480	60	31.35
	640x480	66.6(67)	34.93
	800x600	60	37.90
	1024x768	60	48.40
	1152x870	75	68.68
	1280x960	75	75.00
	1280x1024	60	63.98
i Mac DV (G3)	1024x768	75	60.00

2 DVI - Extended Wide timing

Modes	Resolution	V.Frequency [Hz]	H.Frequency [KHz]
WXGA	1280x768	60	48.36

Note: "*" Only for P5260E/ P5260EP series

	1280x768	75	57.60
	*1280x768	85	68.630
	1280x720	60	45.00
	1280x800	60	49.702
	1360x768	60	47.72
	1440x900	60	55.935

3 DVI - Video Signal

Modes	Resolution	V.Frequency [Hz]	H.Frequency [KHz]
480i (NTSC)	720x480(1440x480)	59.94(29.97)	27.00
480p (NTSC)	720x480	59.94	31.47
576i (PAL)	720x576(1440x576)	50(25)	27.00
576p (PAL)	720x576	50	31.25
720p (NTSC)	1280x720	60	45.00
720p (PAL)	1280x720	50	37.50
1080i (NTSC)	1920x1080	60(30)	28.13
1080i (PAL)	1920x1080	50(25)	33.75
1080p (NTSC)	*1920x1080	60	67.50
1080p (PAL)	*1920x1080	50	56.25

Note: "*" Only for P5260E/ P5260EP series

Regulations and Safety Notices

FCC Notice

This device has been tested and found to comply with the limits for a Class B digital device pursuant to Part 15 of the FCC rules. These limits are designed to provide reasonable protection against harmful interference in a residential installation. This device generates, uses, and can radiate radio frequency energy and, if not installed and used in accordance with the instructions, may cause harmful interference to radio communications.

However, there is no guarantee that interference will not occur in a particular installation. If this device does cause harmful interference to radio or television reception, which can be determined by turning the device off and on, the user is encouraged to try to correct the interference by one or more of the following measures:

- Reorient or relocate the receiving antenna.
- Increase the separation between the device and receiver.
- Connect the device into an outlet on a circuit different from that to which the receiver is connected.
- Consult the dealer or an experienced radio/television technician for help.

Notice: Shielded cables

All connections to other computing devices must be made using shielded cables to maintain compliance with FCC regulations.

Notice: Peripheral devices

Only peripherals (input/output devices, terminals, printers, etc.) certified to comply with the Class B limits may be attached to this equipment. Operation with non-certified peripherals is likely to result in interference to radio and TV reception.

Caution

Changes or modifications not expressly approved by the manufacturer could void the user's authority, which is granted by the Federal Communications Commission, to operate this device.

Operation conditions

This device complies with Part 15 of the FCC Rules. Operation is subject to the following two conditions: (1) this device may not cause harmful interference, and (2) this device must accept any interference received, including interference that may cause undesired operation.

Notice: Canadian users

This Class B digital apparatus complies with Canadian ICES-003.

Remarque à l'intention des utilisateurs canadiens

Cet appareil numérique de la classe B est conforme a la norme NMB-003 du Canada.

Canada — Low-power license-exempt radio communication devices (RSS-210)

a Common information
Operation is subject to the following two conditions:
1. This device may not cause interference, and
2. This device must accept any interference, including interference that may cause undesired operation of the device.

b Operation in 2.4 GHz band
To prevent radio interference to the licensed service, this device is intended to be operated indoors and installation outdoors is subject to licensing.

Declaration of Conformity for EU countries

Acer hereby declares that this device is in compliance with the essential requirements and other relevant provisions of Directive 1999/5/EC. (Please visit http://global.acer.com/support/certificate.htm for complete documents.)

Compliant with Russian regulatory certification

ME61

Radio device regulatory notice

Note: Below regulatory information is for models with wireless LAN and/or Bluetooth only.

General

This product complies with the radio frequency and safety standards of any country or region in which it has been approved for wireless use. Depending on configurations, this product may or may not contain wireless radio devices (such as wireless LAN and/or Bluetooth modules). Below information is for products with such devices.

European Union (EU)

R&TTE Directive 1999/5/EC as attested by conformity with the following harmonized standard:

- **Article 3.1(a) Health and Safety**
  - EN60950-1:2001
  - EN50371:2002
- **Article 3.1(b) EMC**
  - EN301 489-1 V1.4.1:2002
  - EN301 489-17 V1.2.1:2002
- **Article 3.2 Spectrum Usages**
  - EN300 328 V1.5.1:2004

List of applicable countries

EU member states as of May 2004 are: Belgium, Denmark, Germany, Greece, Spain, France, Ireland, Italy, Luxembourg, the Netherlands, Austria, Portugal, Finland, Sweden, United Kingdom Estonia, Latvia, Lithuania, Poland, Hungary, Czech Republic, Slovak Republic, Slovenia, Cyprus and Malta. Usage allowed in the countries of European Union, as well as Norway, Switzerland, Iceland and Liechtenstein. This device must be used in strict accordance with the regulations and constraints in the country of use. For further information, please contact a local office in the country of use.

Acer America Corporation
333 West San Carlos St., San Jose
CA 95110, U. S. A.
Tel : 254-298-4000
Fax : 254-298-4147
www.acer.com

Federal Communications Commission
Declaration of Conformity

This device complies with Part 15 of the FCC Rules. Operation is subject to the following two conditions: (1) this device may not cause harmful interference, and (2) this device must accept any interference received, including interference that may cause undesired operation.

The following local Manufacturer / Importer is responsible for this declaration:

Product:	DLP Projector
Model Number:	PNX0709/PSV0710
Machine Type:	P5260E, P5260EP/ P1165E, P1165EP
Name of Responsible Party:	Acer America Corporation
Address of Responsible Party:	333 West San Carlos St. San Jose, CA 95110 U. S. A.
Contact Person:	Acer Representative
Phone No.:	254-298-4000
Fax No.:	254-298-4147

Declaration of Conformity

We,

Acer Computer (Shanghai) Limited
3F, No. 168 Xizang medium road, Huangpu District,
Shanghai, China

Contact Person: Mr. Easy Lai
Tel: 886-2-8691-3089
Fax: 886-2-8691-3120
E-mail: easy_lai@acer.com.tw

Hereby declare that:

Product:	**DLP Projector**
Trade Name:	**Acer**
Model Number:	**PNX0709/ PSV0710**
SKU Number:	**P5260E, P5260EP/ P1165E, P1165EP**

Is compliant with the essential requirements and other relevant provisions of the following EC directives, and that all the necessary steps have been taken and are in force to assure that production units of the same product will continue comply with the requirements.

EMC Directive 89/336/EEC, amended by 92/31/EEC and 93/68/EEC as attested by conformity with the following harmonized standards:

-. EN55022:1998 + A1:2000 + A2:2003, AS/NZS CISPR22:2002, Class B
-. EN55024:1998 + A1:2001 + A2:2003
-. EN61000-3-2:2000, Class D
-. EN61000-3-3:1995 + A1:2001

Low Voltage Directive 2006/95/EC as attested by conformity with the following harmonized standard:

-. EN60950-1:2001

RoHS Directive 2002/95/EC on the Restriction of the Use of certain Hazardous Substances in Electrical and Electronic Equipment