USA's primary source for projector lamps
myprojectorlamps

PROJECTOR OWNER'S MANUAL

3M

MP8770L

Need a replacement lamp for this projector?

www.myprojectorlamps.com

Original manufacturer manual, provided unmodified as a courtesy of MyProjectorLamps.com.
All trademarks belong to their respective owners.

MP8755/MP8755L MP8770/MP8770L Multimedia Projector

Operator's Guide

MP8755/MP8755L/MP8770/MP8770L Projecteur multimédia Guide de l'opérateur

MP8755/MP8755L/MP8770/MP8770L Multimedia-Projektor Benutzerhandbuch

Proyector de Multimedia MP8755/MP8755L/MP8770/MP8770L Manual del Usuario

MP8755/MP8755L/MP8770/MP8770L Proiettore Multimediale Manuale dell'operatore

MP8755/MP8755L/MP8770/MP8770L Bruksanvisning för multimediaprojektor

MP8755/MP8755L/MP8770/MP8770L Multimedia Projector Gebruiksaanwijzing

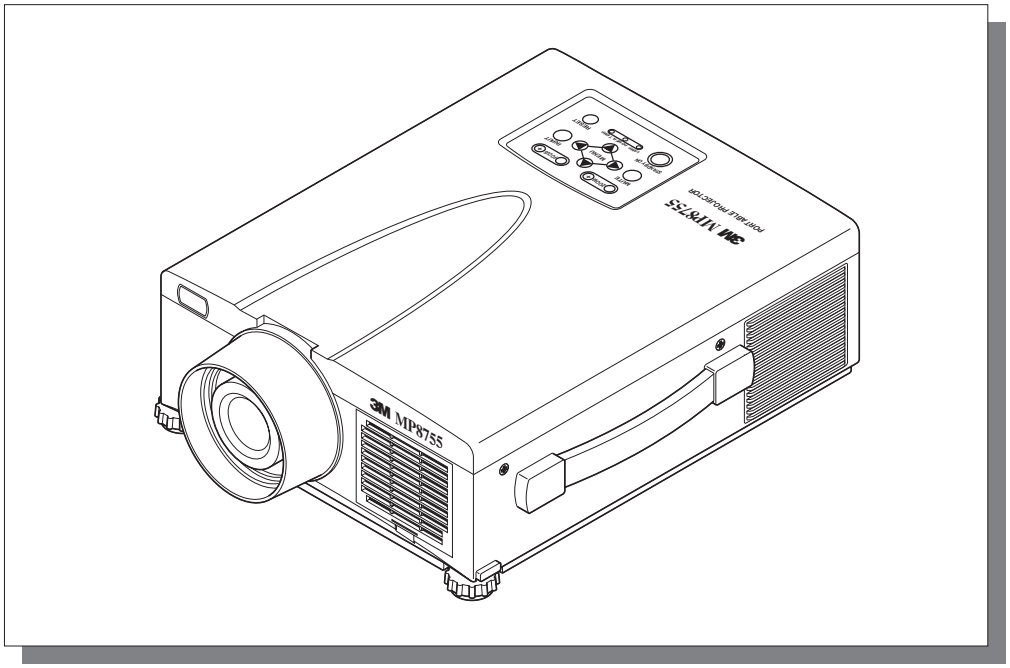

Table of Contents

Please click on any section to jump to that section.

ENGLISH

Safeguards 3

Warranty 5

Section 1: Unpack 6
- 1.1 Contents of Shipping Box 6
- 1.2 Optional Accessories 6
- 1.3 Keep Your Packing Materials 6
- 1.4 What's Next? 6

Section 2: Product Description 7
- 2.1 Machine Characteristics 7
- 2.2 Part Identification List 8
- 2.3 System Setup — Connecting Various Equipment 9
- 2.4 Remote Control Transmitter Identification 11

Section 3: Basic Operations 12
- 3.1 Projector Startup 12
- 3.2 Projector Shutdown 12

Section 4: Adjustments and Functions 13
- 4.1 How To Use Height Adjustment Feet 13
- 4.2 Plug & Play — Function 14
- 4.3 Freeze Function 14
- 4.4 Magnify Function 14
- 4.5 Picture-in-Picture 14
- 4.6 Menu Navigation 15
- 4.7 SETUP 16
- 4.8 INPUT 17
- 4.9 IMAGE 18
- 4.10 OPT 19

Section 5: Maintenance 20
- 5.1 Cleaning the Air Filter 20

Section 6: Lamp 21
- 6.1 Lamp 21
- 6.2 Display Lamp Operation Hours 21
- 6.3 Reset Lamp Hours 21
- 6.4 Replacing the Lamp 22

Section 7: Troubleshooting 23
- 7.1 Symptom/Solution Table 23
- 7.2 Message/Solution Table 24

Section 8: Accessories 25
- 8.1 Service Information 25

Appendix: Technical Information A-1

The Appendix is in English only. Please click here to read it.

© 3M 2000

Safeguards

ENGLISH

INTENDED USE

Before operating the machine, please read the entire manual thoroughly. The 3M™ Multimedia Projector 8755/8755L/8770/8770Lwas designed, built and tested for use indoors, using 3M™ brand lamps, 3M™ brand ceiling mount hardware and nominal local voltages. This projector is not intended for household use. The use of other replacement lamps, outdoor operation or different voltages has not been tested and could damage the projector or peripheral equipment and/or create a potentially unsafe operating condition.

IMPORTANT SAFEGUARDS

1. Read and understand all instructions before using.
   Pay particular attention to areas where this ⚠ symbol is shown.

⚠ WARNING - Indicates a potentially hazardous situation which, if not avoided, could result in death or serious injury.

⚠ **Caution** - Indicates a potentially hazardous situation which, if not avoided, could result in minor or moderate injury. It may also be used to alert against unsafe practices.

✔ **Note** - Used to emphasize important conditions or details.

2. Close supervision is necessary when any appliance is used by or near children. Do not leave appliance unattended while in use.
3. Never look directly into the projector lens when the lamp is on. The high pressure mercury lamp produces a strong light which could damage your eyesight.
4. Care must be taken as burns can occur from touching hot parts.
5. Do not operate appliance with a damaged cord or if the appliance has been dropped or damaged – until it has been examined by a qualified service technician.
6. Position the cord so that it will not be tripped over, pulled, or contact hot surfaces.
7. If any extension cord is necessary, a cord with a current rating at least equal to that of the appliance should be used. Cords rated for less amperage than the appliance may overheat.
8. Always unplug appliance from electrical outlet before cleaning and servicing and when not in use. Grasp plug and pull to disconnect.
9. To reduce the risk of electric shock, do not immerse this appliance in water or other liquids.
10. To reduce the risk of electric shock, do not disassemble this appliance, but take it to a qualified technician when service or repair work is required. Incorrect assembly can cause electric shock when the appliance is subsequently used.
11. Connect this appliance to a grounded outlet.
12. Do not expose this projector to direct sunlight, or use it outside.
13. Keep all ventilation openings free of any obstructions.
14. Always open the lens shutter or remove lens cap when the projection lamp is on.
15. Do not look directly into light beam of laser pointer. The pointer produces a strong light which could damage your eyesight.
16. The projection lamp contains mercury. Always dispose of it in a proper manner according to local regulations.
17. To avoid premature lamp failure, do not change the mounting position of the projector (desktop ⇨ ceiling mount or ceiling ⇨ desktop mount) and continue to use the same lamp.
18. Always operate machine on a flat, sturdy surface.

LOCATION OF PRODUCT SAFETY LABELS

The following safety labels are used on or within the MP8755/MP8755L/MP8770/MP8770L projector to alert you to items or areas requiring your attention:

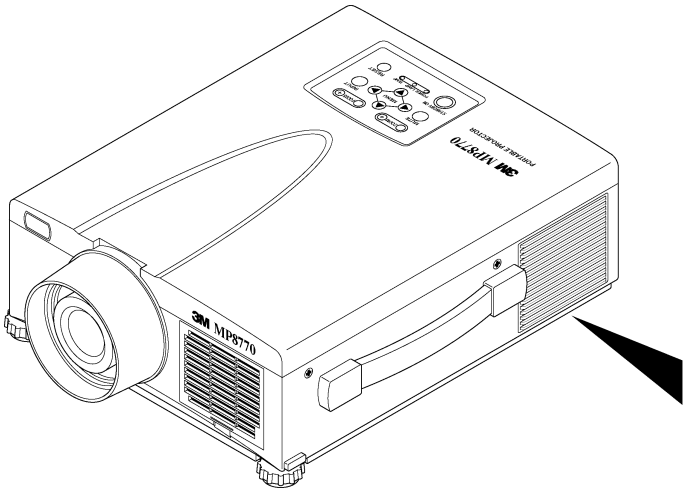

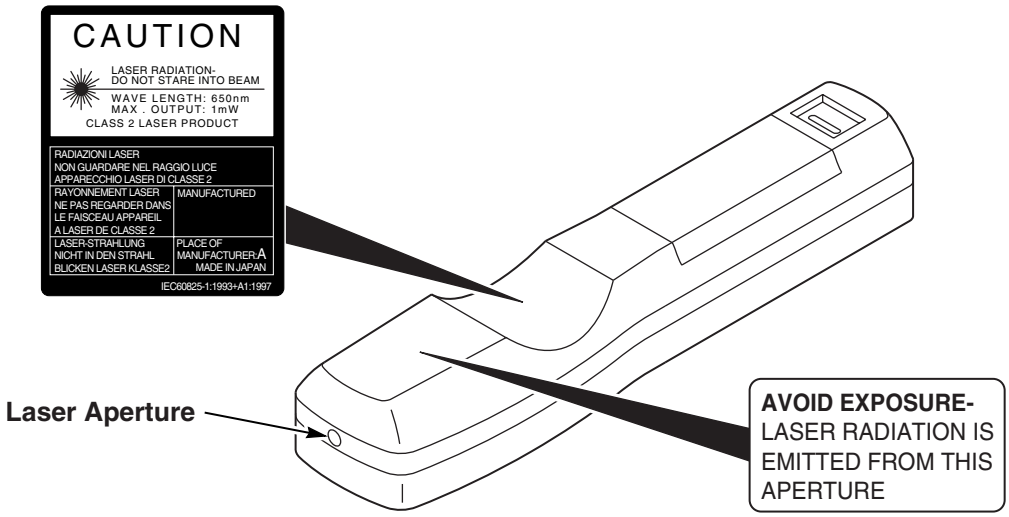

SAVE THESE INSTRUCTIONS

The information contained in this manual will help you operate and maintain your 3M MP8755/MP8755L/MP8770/ MP8770L Multimedia Projector.

© 3M 2000

LIMITED WARRANTY

3M warrants this product against any defects in material and workmanship, under normal usage and storage, for a period of two years from date of purchase. Proof of purchase date will be required with any warranty claim. In the event this product is found to be defective within the warranty period, 3M's only obligation and your exclusive remedy shall be replacement of any defective parts (labor included).

To obtain warranty service, immediately notify the dealer from which you purchased the product of any defects. In the USA call 1-800-328-1371 for warranty or repair service.

LIMITATION OF LIABILITY

THE FOREGOING WARRANTY IS MADE IN LIEU OF ALL OTHER WARRANTIES, EXPRESSED OR IMPLIED, AND 3M SPECIFICALLY DISCLAIMS ANY IMPLIED WARRANTY OF MERCHANTIBILITY AND FITNESS. 3M SHALL NOT BE LIABLE FOR ANY DAMAGES, DIRECT, CONSEQUENTIAL, OR INCIDENTAL, ARISING OUT OF THE USE OR INABILITY TO USE THIS PRODUCT.

Important: The above warranty shall be void if the customer fails to operate product in accordance with 3M's written instructions. This warranty gives you specific legal rights and you may have other rights which vary from state to state.

FCC STATEMENT - CLASS A: This equipment generates, uses and can radiate radio frequency energy, and if not installed and used in accordance with the instruction manual may cause interference to radio communications. It has been tested and found to comply with the limits for a Class "A" computing device pursuant to Subpart B of Part 15 of the FCC Rules, which are designed to provide reasonable protection against such interference when operated in a commercial environment. Operation of this equipment in a residential area is likely to cause interference in which case the user at his/her own expense will be required to take whatever measures may be required to correct the interference.

EEC STATEMENT: This machine was tested against the 89/336/EEC (European Economic Community) for EMC (Electro Magnetic Compatibility) and fulfills these requirements.

Video Signal Cables: Double shielded coaxial cables (FCC shield cable) must be used and the outer shield must be connected to the ground. If normal coaxial cables are used, the cable must be enclosed in metal pipes or in a similar way to reduce the interference noise radiation.

Video Inputs: The input signal amplitude must not exceed the specified level.

PATENTS, TRADEMARKS & COPYRIGHTS

IBM is a registered trademark of **International Business Machines Corporation**. **Apple Macintosh** and **Apple Powerbook** are registered trademarks of **Apple Computer, Inc**. **Microsoft** and **Windows 95** & **Windows 98** are registered trademarks, and **Windows** and **Windows for Workgroups** are trademarks of the **Microsoft Corporation**. **Toshiba** is a registered trademark of **Toshiba Corporation**. **Kensington** is a trademark of **Kensington Corporation.** All other products are trademarks or registered trademarks of their respective companies.

Section 1: Unpack

ENGLISH

1.1 Contents of Shipping Box

The 3M™ MP8755/MP8755L/MP8770/MP8770L Multimedia Projector is shipped with the necessary cables required for standard VCR, PC, MAC™ II or laptop computer connections. Carefully unpack and verify that you have all of the items shown below in Figure 1.1.

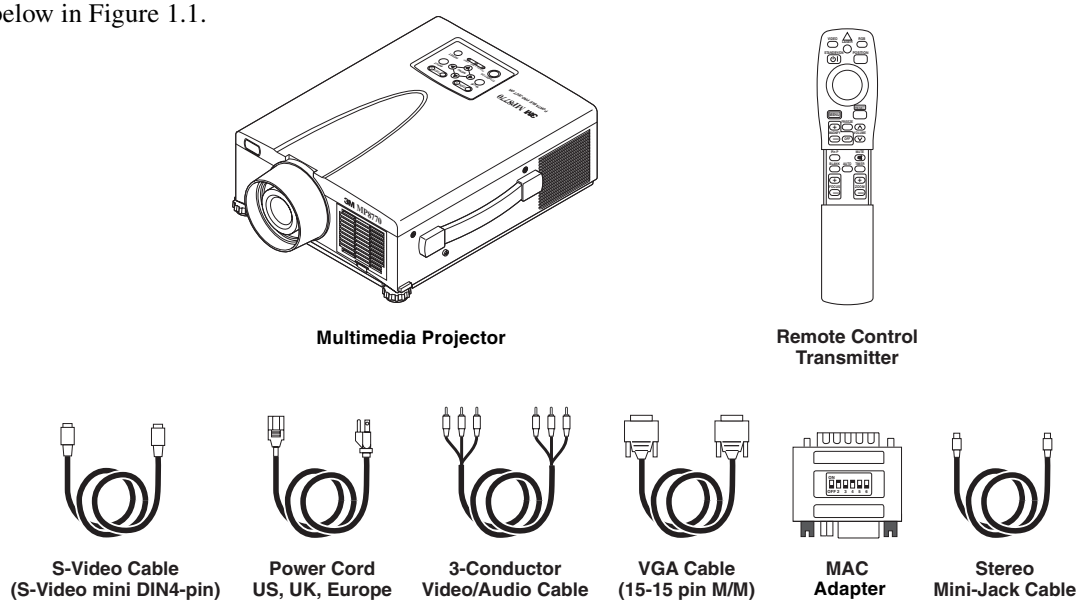

Figure 1.1 Inventory of Shipping Box

The shipping carton contains the items illustrated in Figure 1.1. In addition, the following items are also included, but not shown here. If any of these items are missing, please contact your place of purchase.

- PS/2 mouse cable ····· (1)
- ADB mouse cable ····· (1)
- Serial mouse cable ····· (1)

1.2 Optional Accessories

- RS-232 control cable ····· (1)
- USB mouse cable ····· (1)

1.3 Keep Your Packing Materials

✔ Important

Save the shipping box and packing materials in the event the MP8755/MP8755L/MP8770/MP8770L should require shipping to a 3M Service Center for repair.

1.4 What's Next?

After you have unpacked the MP8755/MP8755L/MP8770/MP8770L system and identified all the parts, you are ready to set up the projector.

Please read this guide thoroughly before operating your new projector.

Be sure to check our web site (www.3m.com/meetings) regularly for updates and supplemental information. On the CD-ROM, you can link directly to the web site by clicking here or on "3M *Innovation"* in the lower right corner of the Main Menu.

© 3M 2000

Section 2: Product Description

ENGLISH

2.1 Machine Characteristics

The MP8755/MP8755L/MP8770/MP8770L Multimedia Projector integrates ultra-high bright lamp and polysilicon LCD display technology into a single unit. It accepts input from two different computer sources and one video/audio source and projects a bright, super crisp image. Switching your presentation from a computer input to a video input, and then back to a computer input simply requires the push of a button on the remote control keypad or control panel keypad.

The MP8755/MP8755L/MP8770/MP8770L Multimedia Projector offers the following features:

- UHB (ultra-high bright) projection lamp
- XGA resolution (3 separate 1024 x 768 LCD panels are used for the R, G and B signals)
- Intelligent XGA scaling (60 Hz and 75 Hz)
- Intelligent VGA scaling
- Compact size, light weight for portability
- RGB (computer video) output terminal
- USB, Serial, PS/2 and Apple Desktop Bus (ADB) mouse emulation
- Power zoom and power focus functions
- 4x digital magnification
- Easy to set up and use
- Ability to display 16.7 million colors
- Two computer input connections
- One video input connection (composite and S-video compatible)
- Full function remote control
- Two built-in stereo speakers (1.2 watts each)
- Horizontal and vertical image inverting function
- Horizontal and vertical image position control
- Digital keystone correction
- On-screen menu with eight languages
- Universal power supply
- IR sensor in front and rear for maximum remote control range
- RS-232 control capability
- Optional ceiling mount kit
- Laser pointer (remote control)
- Color balance control for data/video
- Mounting holes for optional document camera
- Plug & Play compatible
- Picture-in-Picture (PinP)
- Freeze function
- Kensington™ Slot (Kensington microsaver needed)

✔ Note

The MP8755/MP8755L/MP8770/MP8770L is one of the brightest portable projectors in the marketplace. The brightness of your machine will vary depending on the ambient room conditions and contrast/brightness settings.

2.2 Part Identification List

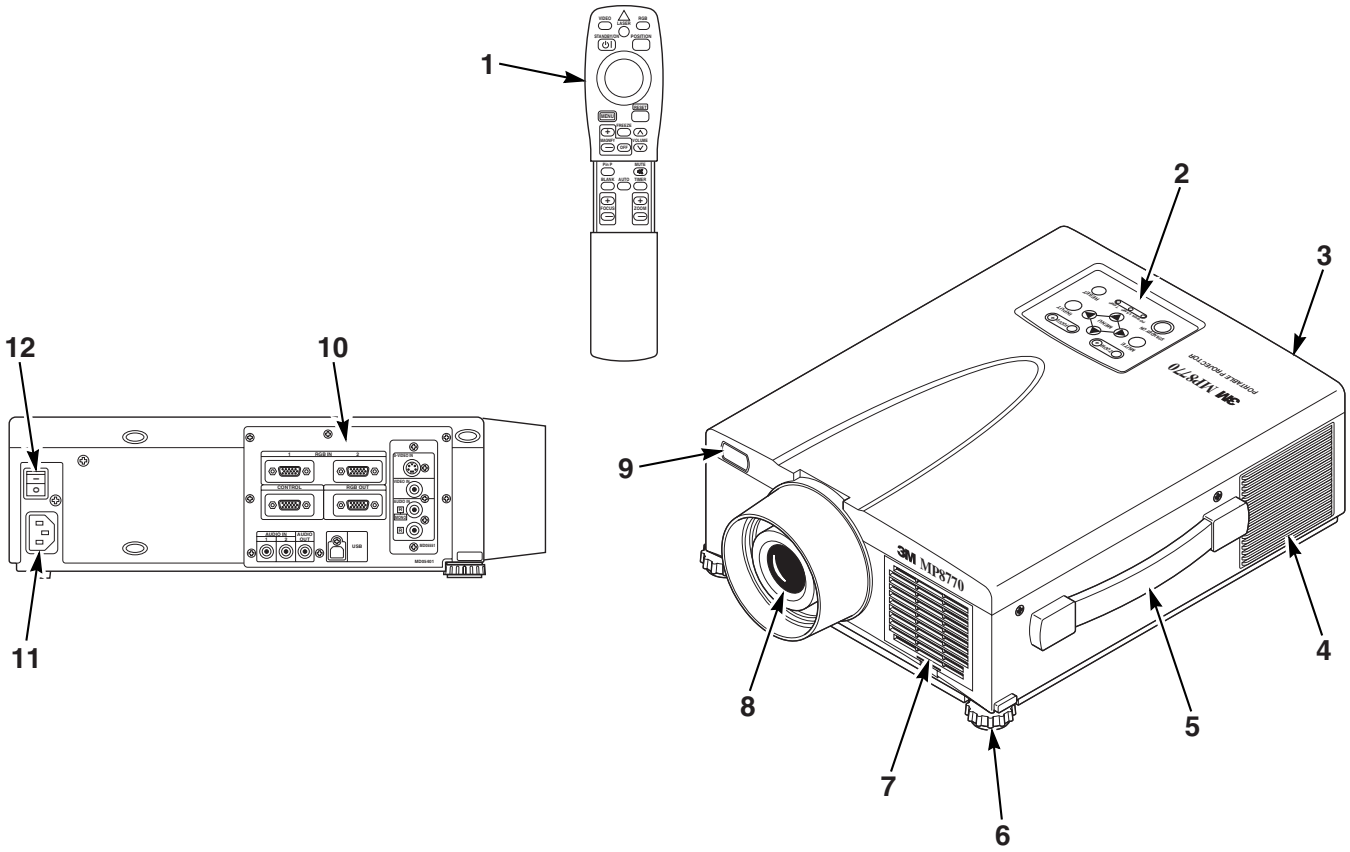

Figure 2.1 Identifying MP8770 Parts

1. Remote control transmitter
2. Control panel keypad
   a) STANDBY/ON button
   b) POWER, LAMP, TEMP indicators
   c) INPUT, MUTE, RESET buttons
   d) MENU buttons
3. Stereo speakers
4. Cooling fan exhaust
5. Carry handle
6. Height adjustment feet
7. Air filter cover
8. Projection lens
9. Remote control sensors (front/back)
10. Terminal connection panels
    a) S-Video, Video, Audio inputs
    b) RGB1 and RGB2 inputs
    c) RGB output
    d) Audio L/R input, Audio output (stereo mini-jack)
    e) RS-232, PS/2, Serial, ADB control
    f) USB port (must use USB mouse cable, optional)
11. AC input-power cord connection
12. Main power switch

© 3M 2000

2.3 System Setup - Connecting Various Equipment

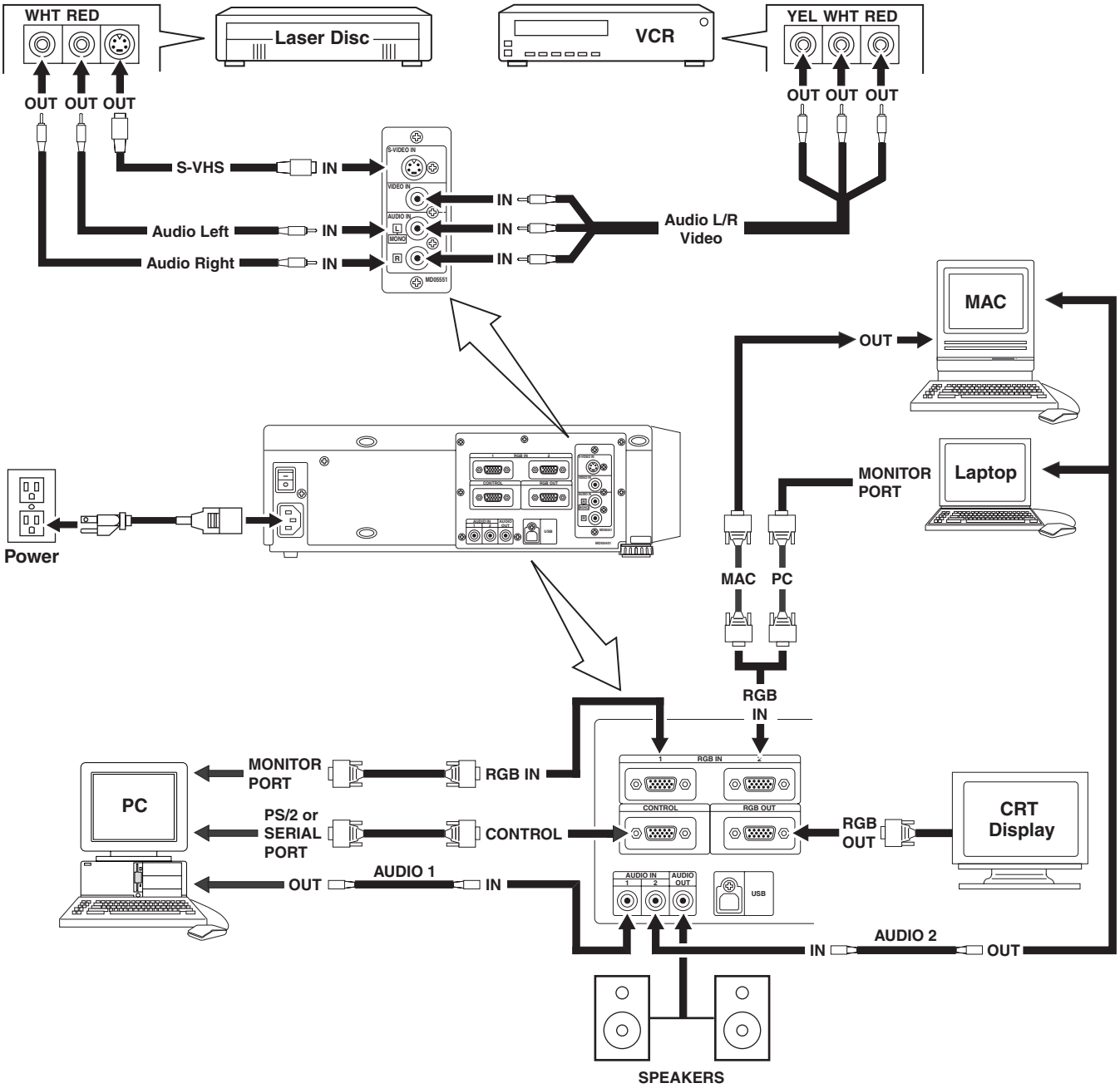

Figure 2.2 Cable Connections

⚠ Caution

Turn power off to all devices before making connections. Never plug anything into the projector or computer while any device is in operation.

The MP8755/MP8755L/MP8770/MP8770L must be powered down when making connections. The mouse emulation may not work if the unit is not powered down before the mouse cable connections are made.

2.3 System Setup - Connecting Various Equipment (continued)

Apple™ Desktop Mouse - The Macintosh operating system should recognize the MP8755/MP8755L/MP8770/MP8770L as a mouse without any drivers being loaded.

VirtualMouse for PC Computer - For IBM™ compatible computers, the operating systems will need to be set to "Serial Mouse," "PS/2 Mouse," or "USB Mouse" to recognize the projector as a mouse pointer device.

Change mouse driver information to "Serial Mouse," "PS/2 Mouse," or "USB Mouse."

a) ***Windows™ 95/Windows™ 98*** - Click "Start;" select "Settings;" select "Control Panel." Click on "Mouse;" select the "General" tab; (see what driver is currently loaded and make note of it); select "Change;" select "Show all devices;" (make note of the current Manufacturer and Model); select "Standard Mouse Type" for Manufacturer; then select "Standard Serial Mouse," "Standard PS/2 Mouse," or "USB Mouse." Click OK to change and apply the new driver. Restart Windows if prompted. *USB mouse emulation is not supported in all versions of Windows 95.*

b) ***Windows™ 3.1*** - From "Program Manager" click "Main;" then click "Windows Setup," (make note of what the current mouse driver is). Click "Options;" then "Change Systems Settings." Choose "Mouse." It should be listed as "Microsoft or IBM PS/2." *USB mouse emulation is not supported in Windows 3.1.*

✔ Note

For proper mouse operation, always turn the projector power on first and then power up the computer.

For some laptop computers you may need to disable the internal pointing device (IPD). This is done through the BIOS level set up of the particular machine, or it could be listed in a "Utilities" program group, i.e., "Toshiba Utilities™," or "Thinkpad Features™."

© 3M 2000

2.4 Remote Control Transmitter Identification

INPUT
Press the VIDEO or RGB button to select the input source. Press again to select the next source.

STANDBY/ON
Set main power switch to ON. Press STANDBY/ON button to begin projection mode (lamp on) or press and hold button for 1 second to switch to standby mode (lamp off).

DISC PAD*/LEFT MOUSE BUTTON
For menu screens, press DISC PAD to select menu items. For non-menu screens, press DISC PAD for mouse shift or left mouse button function.

MENU*
Press the remote control button to display the menu screen.

MAGNIFY*
Press the MAGNIFY (+) to enlarge the center of the display image. Press again to enlarge image to maximum of 4X magnification. Press MAGNIFY (-) to reduce the display image size. Press OFF to return to normal image size. (Can be used with the POSITION button to select the image area being magnified.)

PinP*
Press the PinP button to display a video signal as a small picture-in-picture screen in the corner of an RGB display. Press it again to enlarge the picture-in-picture screen size. Press it a third time to exit the PinP screen and turn the function OFF. The position of the picture-in-picture screen can be controlled by pressing the POSITION button or from the Image menu. (Both RGB and Video signals must be present for the picture-in-picture screen to operate.)

BLANK ON
Press button to turn ON/OFF the screen blanking function.

FOCUS
Press (+) or (-) to adjust the image sharpness.

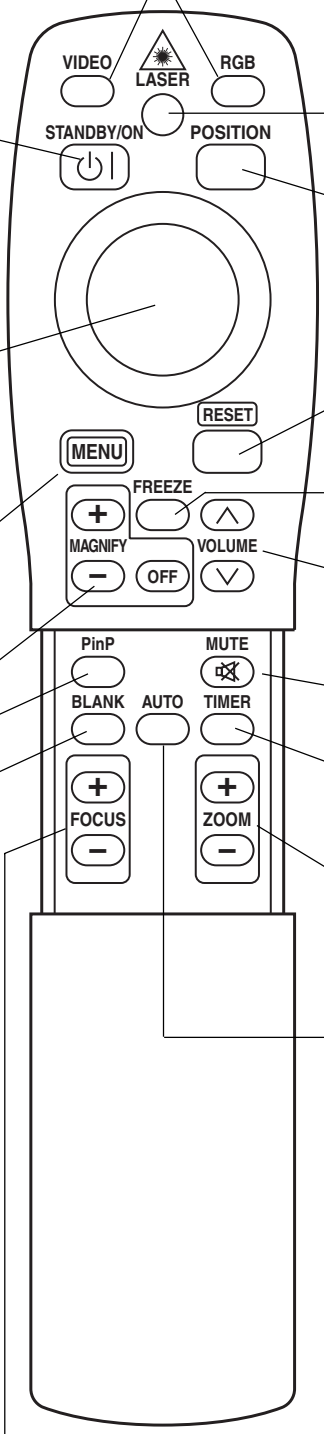

LASER
Press and hold down button to project laser pointer.

> **⚠ CAUTION**
> To prevent injury to eyesight, do not point laser beam at other persons or look directly into laser beam.

POSITION*
Press button then use DISC PAD to move image (RGB signal only) up/down or left/right.

RESET*/RIGHT MOUSE BUTTON
For menu screens, press button to return to initial settings. For non-menu screens, press button for right mouse button function.

FREEZE*
Press button to turn ON/OFF the freeze image function.

VOLUME*
Press up to increase or down to decrease speaker volume.

MUTE*
Press button to turn the mute function (speaker sound) ON/OFF.

TIMER*
Press button to turn the menu screen timer ON/OFF. *The timer does not display when the blank function is active.*

ZOOM
Press (+) to increase or (-) to decrease the size of the displayed image.

AUTO*
Press the AUTO button to activate the auto sync function. The message “AUTO IN PROGRESS” will display for several seconds as the projector adjusts the V. POSIT, H.POSIT. H.PHASE, & H. SIZE settings. The Auto Sync function will not operate under the following conditions:

- Initial screen message NO INPUT IS DETECTED or SYNC IS OUT OF RANGE is displayed.
- Freeze and Magnify functions have not been turned off prior to pressing AUTO button.
- Software application running on your computer is not set to maximum screen size prior to pressing AUTO button.

*** This button will not function if the message "NO INPUT IS DETECTED" or "SYNC IS OUT OF RANGE" is displayed.**

Section 3: Basic Operations

3.1 Projector Startup

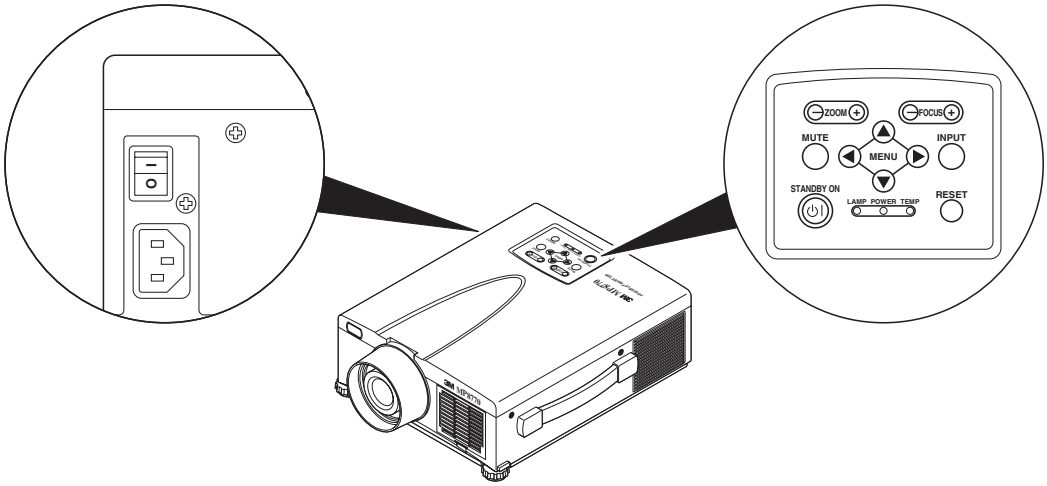

Figure 3.1 Projector Controls

1. **Make all cable connections and line hookups with the power off.**
2. **Turn on the projector's MAIN POWER SWITCH .** The POWER indicator will light up orange.
3. **Press the STANDBY/ON button .** The POWER indicator blinks (green) and then lights (green).
   The POWER indicator will blink green during warm-up and lamp ignition. When power is turned off, there is a 60 second reset period before the STANDBY/ON button will function again.
4. **Adjust the screen size by pressing the ZOOM button.**
5. **Adjust the focus by pressing the focus button.**
   Press any other button to make the focus screen disappear.
6. **Turn on all connected equipment.** Refer to Section 2.3.
7. **Press the INPUT button on the projector or the INPUT SELECT (VIDEO or RGB) button on the remote to select the source of the signal to be projected on the screen.** The selected signal input is displayed at the bottom right of the screen. The display will show the **last selected input source** before power was turned off.

3.2 Projector Shutdown

1. **Press and hold the STANDBY/ON button for 1 second.** The POWER indicator blinks orange and the lamp turns off. After approximately 1 minute, the fan stops and the indicator stays orange.
2. Turn off the projector's **MAIN POWER SWITCH** .

⚠ **Caution**
Do not turn off the MAIN POWER SWITCH before pressing the STANDBY/ON button. After the STANDBY/ON button is pressed, the fan rotates for about 1 minute to cool the projector.

3. **Attach lens cap to protect projection lens.**
4. **Disconnect cables if moving projector to new location.**

© 3M 2000

4.1 How To Use Height Adjustment Feet

Adjust the image elevation using the height adjustment feet at the front of the projector.

1. Raise the front end of the projector so the feet are not touching the tabletop.
2. Push the lock button to unlock the foot.
3. Extend or retract each foot to the desired height.
4. Release the lock button to lock the foot into position.
5. For fine adjustments, rotate each foot.

⚠ Caution

Do not unlock the foot adjusters if the projector is not supported. If the foot adjusters do not lock completely, turn the foot adjusters slightly before locking.

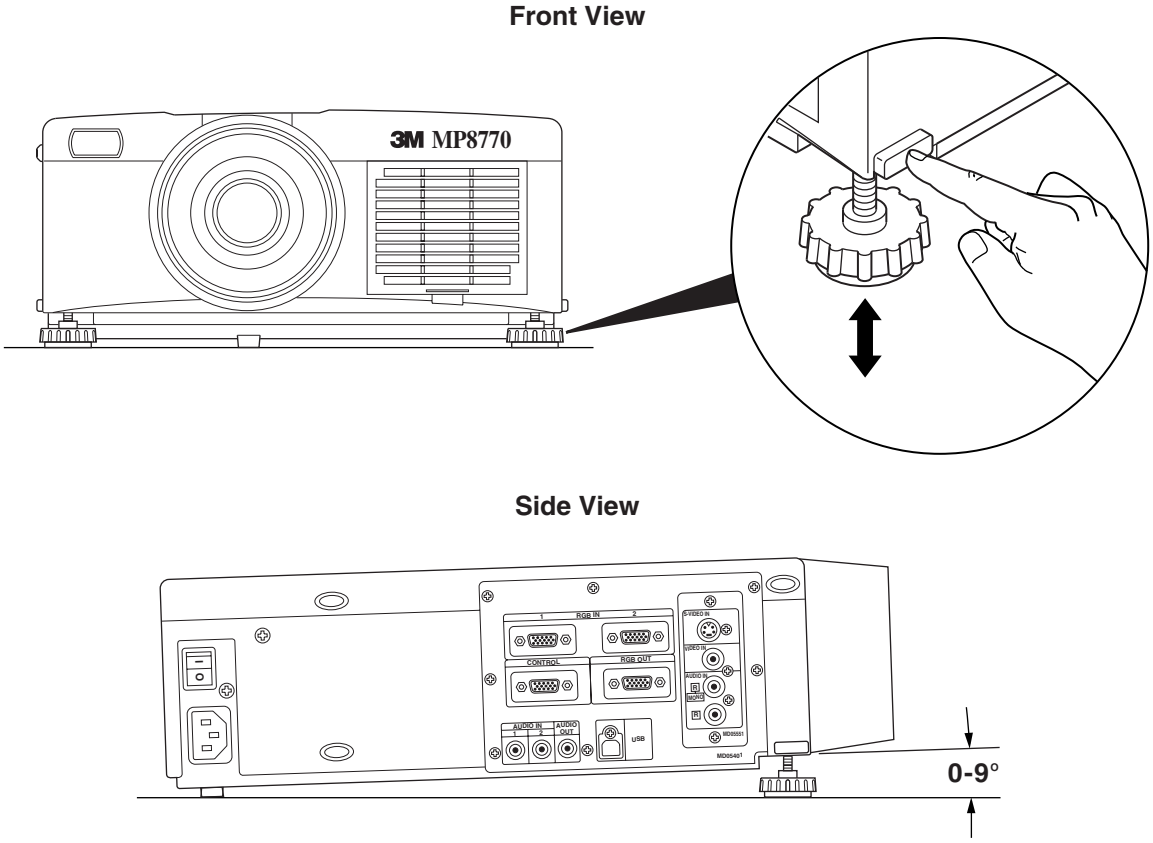

Figure 4.1 Height Adjustment

4.2 Plug & Play Function

This projector is VESA DDC 1/2B compatible. Plug & Play is possible by connecting to a computer that is VESA DDC (Display Data Channel) compatible. Plug & Play is a system configured with peripheral equipment including a computer and display, and a compatible operating system.

✔ Note

Use the RGB cable included with this projector when using Plug & Play. With other cables, pins (12) - (15) are sometimes not connected (effective only for RGB1).

4.3 Freeze Function

The Freeze function is used to display (freeze) a single frame of the image being projected.

✔ Note

The FREEZE function will turn off during the operation of the MENU, FOCUS, PinP, VOLUME, MUTE, BLANK, TIMER, AUTO or POSITION functions.

4.4 Magnify Function

The Magnify function is used to enlarge a portion of the display image. Press the MAGNIFY (+) button to magnify the center of the displayed image. Press again to magnify to 4x. Press the MAGNIFY (-) button to reduce image size. Press OFF to return to normal image size. To move the display area being magnified, press the POSITION button, then use the DISC PAD to move the magnified area up, down, left or right.

✔ Note

To return to normal display, press the MAGNIFY OFF button. The MAGNIFY function will turn off during the operation of the KEYSTONE or AUTO functions.

4.5 Picture-in-Picture

The PinP button on the remote control is used to display a video signal image in the RGB signal image. Press the PinP button to display the PinP screen (small size). Press again to increase the screen size (maximum size screen). Press a third time to exit the function and remove the PinP screen.

[small screen size ➔ maximum screen size ➔ OFF]

Both RGB and Video signals must be present for the Picture-in-Picture function to operate.

1. Select RGB1 or RGB2 input.
2. Start the video input source.
3. Press the PinP button on the remote control to display a small PinP screen in the corner of the projector image. Press the PinP button again to enlarge the size of the screen display to maximum.
4. Press the POSITION button on the remote control to change the location of the PinP screen. *The position of the Picture-in-Picture screen can also be changed from the Image menu.*
5. Press the PinP button a third time to exit the function and remove the PinP screen from the projector image.

© 3M 2000

4.6 Menu Navigation

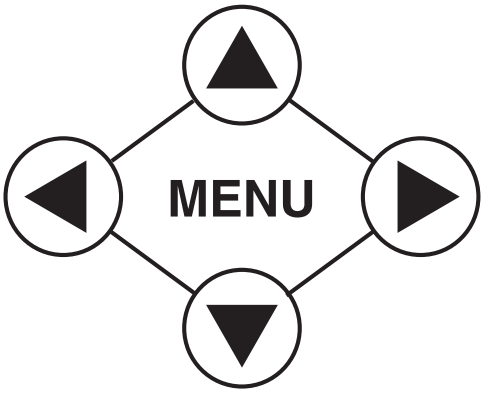

Figure 4.2 Menu Button

1. **Press any MENU button on projector or remote control MENU button.**
   On-screen menus are displayed on the screen.
2. **Select the menu to be adjusted using the MENU (◀ ▶) buttons or DISC PAD**.
   Selected Menu is highlighted.
3. **Select the item to be adjusted using the MENU (▲ ▼ ◀ ▶) buttons or DISC PAD.**
   Highlighted items may be adjusted.

✔ Note

Separate settings are provided for the VIDEO, RGB1 and RGB2 input terminals. Adjustments are saved after power off.

Factory Default Setting:

To reset a single item from SETUP menu:

1. Select the adjustment item (bright, contrast...).
2. Press the RESET button. **Only the selected item resets.**

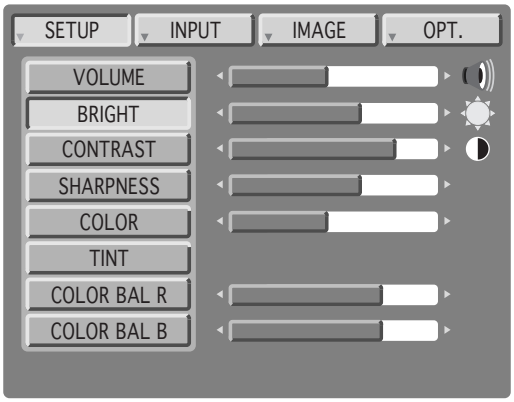

Figure 4.3 Default Settings

4.7 SETUP

The SETUP sub-menu is used to adjust and move the image position. The projector will display either the RGB (Figure 4.4) or Video (Figure 4.5) menu according to the input source being projected.

RGB Signal Input

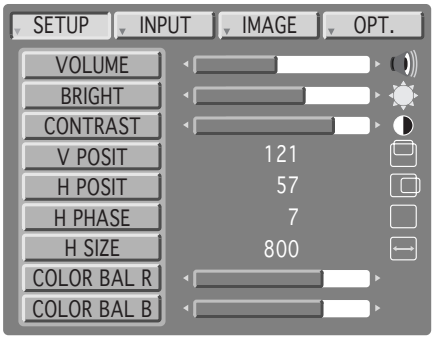

Figure 4.4 RGB Signal

Video Signal Input

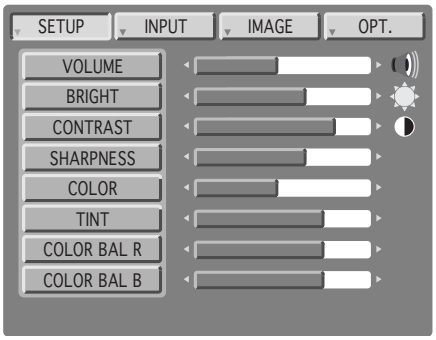

Figure 4.5 Video Signal

Adjustment Item	
VOLUME	Decrease ⟷ Increase
BRIGHT (BRIGHTNESS)	Dark ⟷ Bright
CONTRAST	Lower ⟷ Higher
SHARPNESS	Soft ⟷ Sharp
COLOR	Less ⟷ More
TINT	Red ⟷ Green
V.POSIT (V.POSITION)	Moves the picture up or down.*
H.POSIT (H.POSITION)	Moves the picture left or right.*
H.PHASE	Decreases the picture flicker.*
H.SIZE	Widens or Narrows the horizontal size of picture.*
COLOR BAL R	Less red ⟷ More red
COLOR BAL B	Less blue ⟷ More blue

***Auto Sync Function:** Press the AUTO button on the remote control to engage the automatic sync function. The message "AUTO IN PROGRESS" will display for several seconds as the projector adjusts the V. POSIT, H.POSIT. H.PHASE, & H. SIZE settings. Auto Adjust can also be executed using the operation buttons of the main unit. Hold down the RESET button and press the input switch (INPUT) button.

✔ Note

- TINT cannot be adjusted with a PAL, SECAM, N-PAL or M-PAL video signal input.
- TINT, COLOR and SHARPNESS cannot be adjusted with an RGB signal input.
- V. POSIT, H. POSIT, H. PHASE and H. SIZE cannot be adjusted with a VIDEO signal input.
- Menu operation is not possible during freeze functions.
- Displaying the Setup menu will cancel the magnify and freeze functions.

© 3M 2000

4.8 INPUT

The INPUT sub-menu is used to select the RGB or video input source. The RGB values are shown in figure 4.6. The VIDEO values are shown in Figure 4.7.

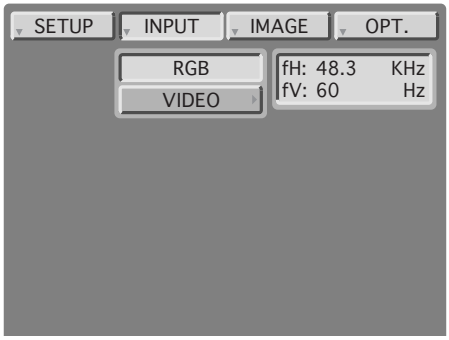

Figure 4.6 Input Menu - RGB

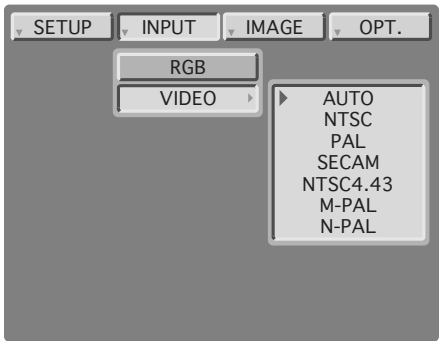

Figure 4.7 Input Menu - Video

Adjustment Area	Value
RGB	Displays the following RGB inputs: fH: horizontal sync frequency fV: vertical sync frequency
Video	Selects the VIDEO signal format Auto, NTSC, PAL, SECAM, NTSC 4.43, M-PAL, N-PAL

ENGLISH

4.9 IMAGE

The IMAGE sub-menu is used to change the image characteristics.

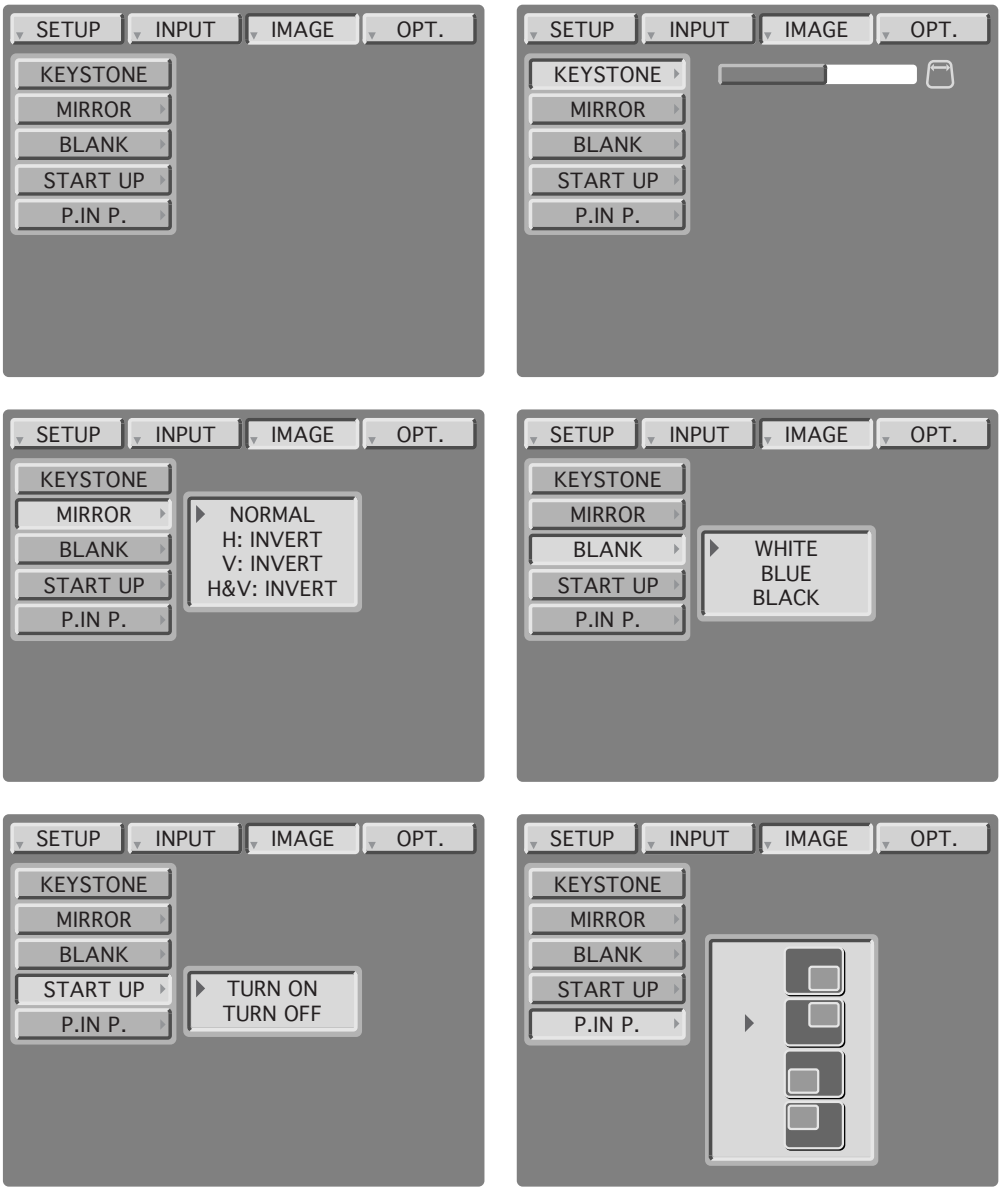

Figure 4.8 Image Adjustment Screens

Adjustment Screen	Value
KEYSTONE	Reduce distortion at bottom of image. ⟷ Reduce distortion at top of image.
MIRROR	Inverts the picture horizontally or vertically. H: INVERT Inverts the picture horizontally. V: INVERT Inverts the picture vertically. H&V: INVERT Inverts the picture horizontally and vertically.
BLANK	Selects the blank color.
STARTUP	Enable / disable startup screen When canceled, the background color will change to blue.
P. IN P.	Change the picture in picture screen display position.

© 3M 2000

4.10 OPT.

The OPT. sub-menu allows you to control communication function.

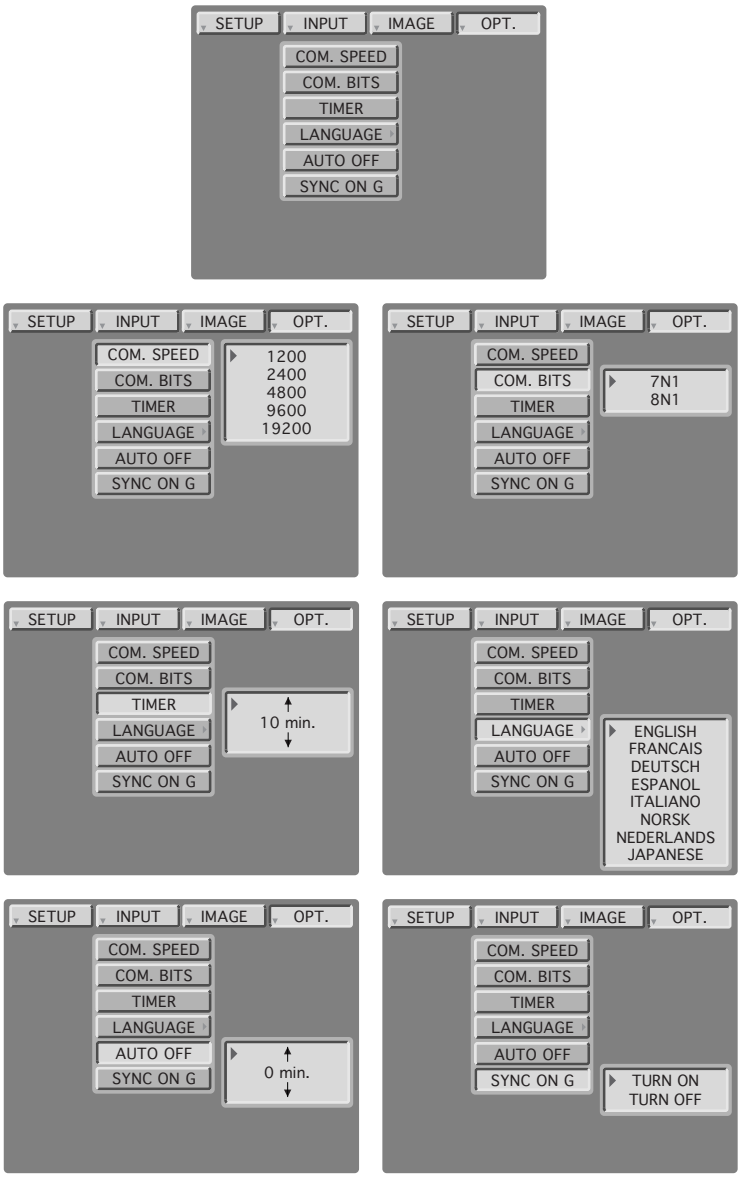

Figure 4.9 OPT Adjustment Screens

Adjustment Screen	Value	Default
COM. SPEED	Selects the data speed of transmission.	1200
COM. BITS	Selects the data format of transmission. 7N1... 7 data-bits, No parity, 1 stop bit. 8N1... 8 data-bits, No parity, 1 stop bit.	7N1
TIMER	Sets the timer (0-99 minutes).	—
LANGUAGE	Selects the language on-screen menu. (English, French, German, Spanish, Italian, Norwegian, Netherlands, Japanese)	—
AUTO OFF	Selects how long projector will stay on in minutes, if no input is detected. Select 0 to disable this function.	—
SYNC ON G	Sets the SYNC on G function to ON/OFF (supports older monitors).	

ENGLISH

5.1 Cleaning the Air Filter

✔ Note

Clean the air filter about every 50 hours. If air is restricted due to dust accumulation on filter, the projector may shut down due to overheating.

1. Turn off the **MAIN POWER SWITCH** of the projector and disconnect power cord **(1)**. Let cool for 20 minutes.
2. Push tab **(2)** and remove the air filter cover **(3)** from the front of the projector.
3. Lift retainer wire **(4)** and carefully remove foam air filter **(5)**.
4. Vacuum **(6)** dust and dirt from filter.
5. Re-install air filter and replace air filter door.

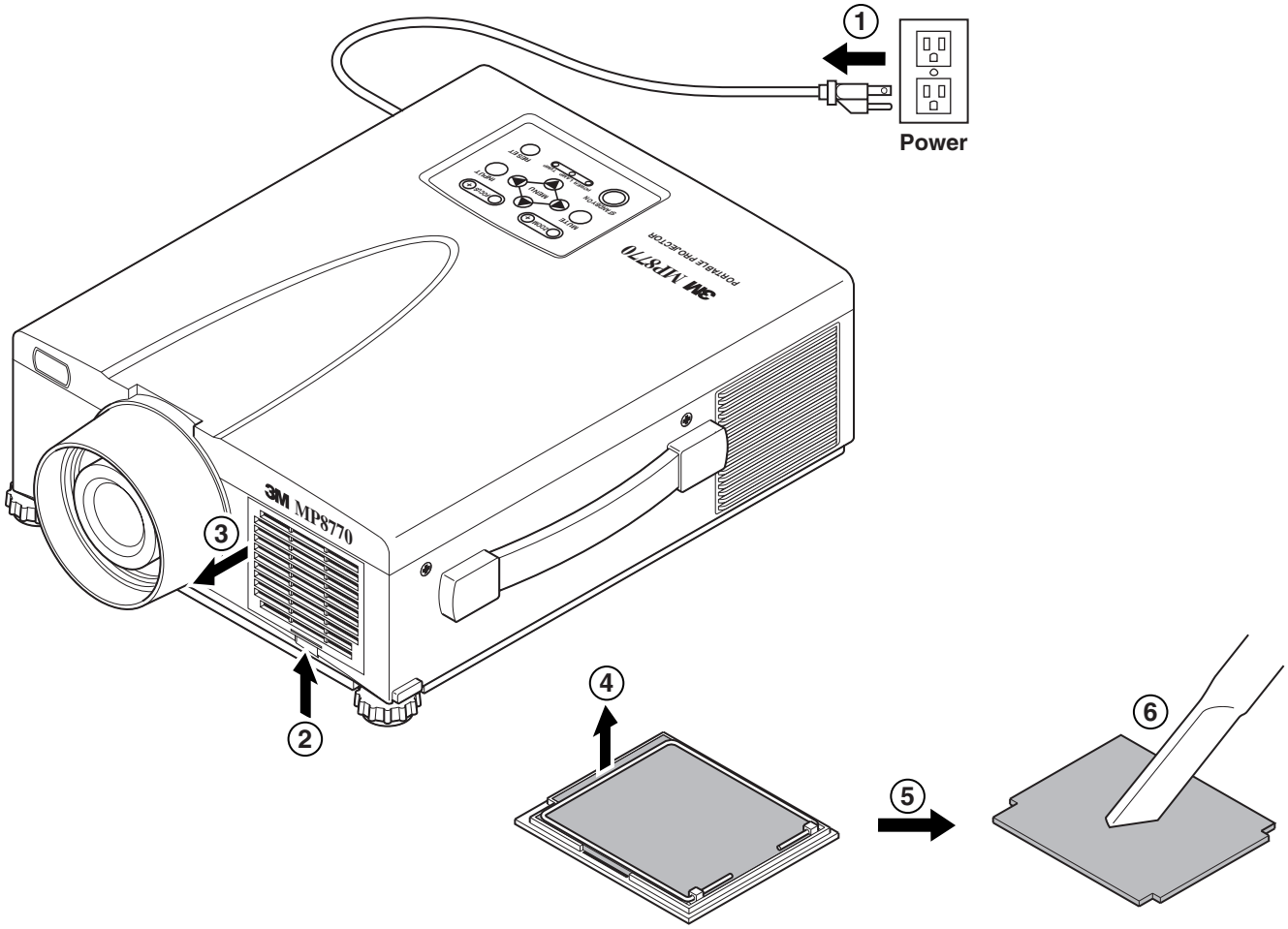

Figure 5.1 Remove Air Filter

© 3M 2000

Section 6: Lamp

ENGLISH

6.1 Lamp

The following symptoms may indicate a lamp in need of replacement:

- LAMP indicator lights up red.
- "CHANGE THE LAMP" message appears on the screen.

✔ Note

This lamp contains mercury. Consult your local hazardous waste regulations and **dispose of this lamp in a proper manner.**

6.2 Display Lamp Operation Hours

To determine the lamp operation hours, follow these steps:

1. While the projector is running, press and hold the TIMER button on the remote control for 3 seconds.

2. The operating time of the lamp will be displayed. The message "CHANGE THE LAMP, AFTER REPLACING LAMP RESET THE LAMP TIMER" will appear after the lamp operating hours have reached the end of the normal lamp life. The message "POWER WILL TURN OFF AFTER **20** HOURS" will appear when 20 or less lamp hours remain. The number of hours left until shut down will decrease until **0** hour is reached, then power will be turned off.

✔ Note

After normal lamp operating time has expired, the projector will only run for 10 minute intervals when restarted until the lamp is replaced and the lamp timer is reset. The message "CHANGE THE LAMP" will blink at projector start up to remind you to change the lamp.

6.3 Reset Lamp Hours

1. To display the total lamp hours, press and hold for 3 seconds, the RESET button on the projector or Timer button on the remote control.

2. To reset the lamp timer, press the RESET button on the projector or MENU button on the remote while the total lamp hours are displayed. Use the arrow button on the projector or the DISC PAD to select 0 (or CANCEL).

6.4 Replacing the Lamp

⚠ WARNING

To reduce the risk of electrical shock, always turn off projector and disconnect power cord before changing lamp.

⚠ Caution

To reduce the risk of severe burns, allow the projector to cool for at least 45 minutes before replacing the lamp.
To reduce the risk of cuts to fingers and damage to internal components, use caution when removing lamp glass that has failed and shattered into sharp pieces.

✔ Note

For maximum lamp life, do not apply shock, handle or scratch the lamp glass when it is hot. Also, do not use an old or previously used lamp as a replacement lamp.

1. **Remove lamp access door:** The lamp access door is located on the bottom of the machine. Use a screwdriver to unscrew the cover retaining screw **(1)** and gently remove the cover **(2)** and set it aside.

2. **Retaining screws:** Use a screwdriver to unscrew the lamp module retaining screws. **(3)**

✔ Note

All lamp module screws must be loosened. These screws are self-containing screws that cannot be removed from the lamp module or access door.

3. **Remove lamp module:** Carefully slide the lamp module out **(4)** using steady pressure.

⚠ Caution

To reduce the risk of cuts to fingers from sharp metal fittings and/or decreasing image quality by touching the lens, do not insert hand into the empty lamp compartment when the lamp has been removed.

4. **Insert lamp module:** Carefully insert **(4)** the new lamp module. Ensure that it is fully seated. Tighten the lamp module retaining screws **(3)** to secure the lamp module in place.

   Insert the hinge tabs on the bottom of the lamp access door, then close and tighten the retaining screw **(1)** to secure the door.

✔ Note

Reset the lamp operation hours. See Section 6.3 for details.

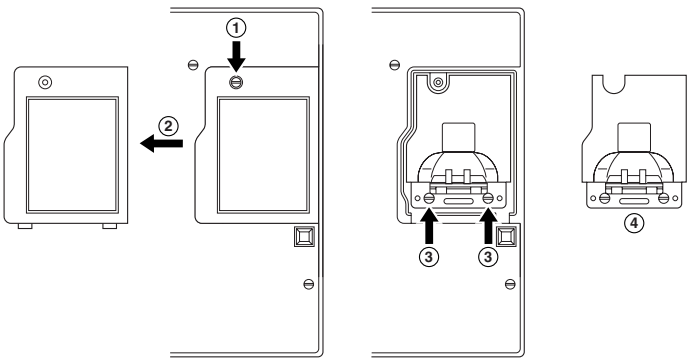

Figure 6.1 Lamp Module

© 3M 2000

Section 7: Troubleshooting

ENGLISH

7.1 Symptom/Solution Table

Symptom	Cause	Solution
Power cannot be turned on.	• The main power is not turned on. • The power cord is disconnected. • 60 seconds have not elapsed since the power was turned off.	• Turn on the MAIN POWER SWITCH. • Insert the power cord into an AC socket. • Wait 60 seconds before turning on power.
No picture and sound.	• The setting of the input source is not correct. • RGB/Video/Audio wiring to projector is not correct.	• Set the correct input using the input select button of the projector or the remote control. • Connect the cable to correct input/output source.
Sound is heard with no picture.	• RGB/Video/Audio wiring to projector is not correct. • The brightness is set fully to dark. • Lens cap is on.	• Connect the cable to correct input/output source. • Press the MENU button and increase BRIGHTNESS. • Remove lens cap.
Picture is displayed with no sound.	• Audio wiring to projector is not correct. • The volume is set to minimum. • The unit is muted. • PinP is on and audio is switched to VIDEO mode.	• Connect the cable to correct input/output source. • Press the VOL button to increase Volume. • Press the MUTE button. • Press VOLUME and move DISC PAD to switch to audio input.
Color is weak and tint is incorrect.	• The color and tint have been adjusted incorrectly.	• Adjust the color and tint correctly.
Picture is dark.	• The brightness and contrast has not been adjusted correctly. • The lamp needs to be replaced.	• Adjust the brightness and contrast correctly. • Replace the lamp with a new one.
Picture is not clear.	• Projector is out of focus.	• Adjust the focus and H PHASE.
LAMP indicator lights red.	• Lamp will not ignite.	• Turn off power and let cool for 20 minutes, then restart. • If problem persists call your dealer.
	• Temperature inside projector is too hot.	• Clear blocked ventilation holes. • Clean air filter.
LAMP indicator blinks red.	• Lamp access door on bottom of case is open.	• Ensure lamp access door is closed.
	• The lamp operating hours have reached maximum operating hours.	• Replace the lamp.
TEMP indicator blinks red.	• Cooling fan not operating.	• Contact your dealer.

7.2 Message/Solution Table

Error Message Displays	Cause	Solution
NO INPUT IS DETECTED.	The projector is not detecting a signal.	Check cable connections to input device. Input device not connected to this input mode, switch to next mode.
SYNC is out of Range.	The horizontal frequency of input signal exceeds projector capability.	Switch projector to correct resolution. See Appendix A.5
CHANGE THE LAMP. CALL A MAINTENANCE PERSON.	Nearing end of normal lamp operation time.	Change the projector lamp and reset the lamp operation hours to zero.
CHANGE THE LAMP. CALL A MAINTENANCE PERSON. THE POWER WILL TURN OFF AFTER *hr.	Remaining lamp operation time = 20 hours or less. *Indicates number of hours until power turns off automatically.	Change the projection lamp and reset the lamp operation hours to zero.
CHANGE THE LAMP. (Blinking message)	Normal lamp operating time has expired. Safety feature shuts projector down after 10 minutes.	Change the projector lamp and reset the lamp operation hours to zero.

© 3M 2000

Section 8: Accessories

ENGLISH

8.1 Service Information

For product information, product assistance, service information, or to order accessories, please call:

In U.S. or Canada: **1-800-328-1371**
In other locations, contact your local 3M Sales office.

Accessories

	Part Number
Ultra-high performance lamp module, 190 W	78-6969-8919-9
Power cord (US)	DY-0205-1356-9
Power cord (UK)	DY-0205-1355-1
Power cord (Eu)	DY-0205-1354-4
VGA cable	78-8118-3401-5
MAC adapter	78-8118-3308-2
S-video cable	78-8118-3238-1
3-conductor video/audio cable	78-8118-3234-0
Serial mouse cable	78-8118-8107-3
PS/2 mouse cable	78-8118-8105-7
ADB mouse cable	78-8118-8016-5
Stereo mini jack cable	78-8118-8104-0
Remote Control	78-8118-8246-9

Not Included with Basic Packet

	Part Number
Ceiling mount	78-6969-8748-2
Adjustable height suspension	78-6969-8312-7
Shipping case	78-6969-8584-1
Soft carry case	78-6969-8585-8
RS-232 control cable	78-8118-3312-4
USB mouse cable	78-8118-8186-7
Document Camera - 120 VAC 60 Hz (optional)	78-6969-8578-3
Document Camera - 220 VAC 50 Hz (optional)	78-6969-8724-3

How to Order

Please order these parts through your dealer, or contact 3M Customer Service at the following number:

In U.S. or Canada: **1-800-328-1371**

In other locations, contact your 3M Sales office.

The contents of this manual are subject to revision without prior notice.

3M assumes no responsibility for the infringement of special rights of a third party or other rights that may arise out of the information contained in this manual.

Reproduction of this manual in any form without prior permission is strictly prohibited.

3M will replace the manual if any pages are missing or collated incorrectly.

Important Notice
All statements, technical information, and recommendations related to 3M's products are based on information believed to be reliable, but the accuracy or completeness is not guaranteed Before using this product, you must evaluate it and determine if it is suitable for your intended application. You assume all risks and liability associated with such use. Any statements related to the product which are not contained in 3M's current publications, or any contrary statements contained on your purchase order shall have no force or effect unless expressly set forth in a written agreement signed by an authorized officer of 3M.

Warranty and Limited Remedy. This product will be free from defects in material and manufacture for a period of two years from the date of purchase**. 3M MAKES NO OTHER WARRANTIES INCLUDING, BUT NOT LIMITED TO, ANY IMPLIED WARRANTY OF MERCHANTABILITY OR FITNESS FOR A PARTICULAR PURPOSE.** If this product is defective within the warranty period stated above, your exclusive remedy shall be, at 3M's option, to replace or repair the 3M product or refund the purchase price of the 3M product.

Limitation of Liability. Except where prohibited by law, 3M will not be liable for any loss or damage arising from this 3M product, whether direct, indirect, special, incidental or consequential regardless of the legal theory asserted.

Let us help you make the most of your next presentation. We offer everything from presentation supplies to tips for better meetings. And we're the only transparency manufacturer that offers a recycling program for your used transparencies. For late-breaking news, handy reference and free product samples, call us toll-free in the continental United States and Canada, 24 hours a day, or visit our Internet Website.

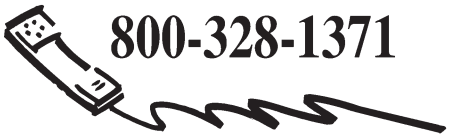

http://www.3m.com/meetings
e-mail: meetings@mmm.com

3M Austin Center
Building A145-5N-01
6801 River Place Blvd.
Austin, TX 78726-9000

3M Canada
P.O. Box 5757
London, Ontario
N6A 4T1

3M Mexico, S.A. de C.V.
Apartado Postal 14-139
Mexico, D.F. 07000
Mexico

3M Europe
Boulevard de l'Oise
95006 Cerge Pontoise Cedex
France

Printed on 50% recycled wastepaper, including 10% post-consumer

Litho in USA
© 3M 2000
78-6970-9041-9 Rev. B

QR46271