myprojectorlamps.com

The most trusted, dependable name in projector lamp sales.

http://www.myprojectorlamps.com

http://www.myprojectorlamps.ca

http://www.myprojectorlamps.eu

The following projector manual has not been modified or altered in any way.

MP7760 Multimedia Projector

Operator’s Guide

MP7630 Projecteur multimédia Guide de l'opérateur

MP7630 Multimedia-Projektor Benutzerhandbuch

Proyector de Multimedia MP7630 Manual del Usuario

MP7630 Proiettore Multimediale Manuale dell'operatore

MP7630 Bruksanvisning för multimediaprojektor

MP7630 Multimedia Projector Gebruiksaanwijzing

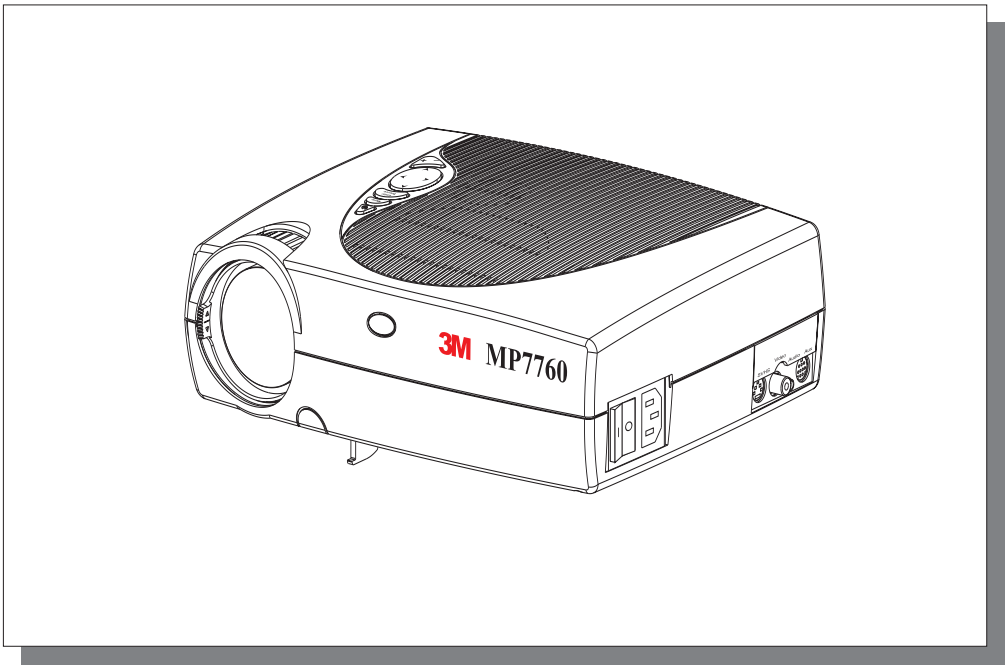

Table of Contents

Please click on any section to jump to that section

Introduction

Safeguards 4
Warranty 6

Section 1: Unpack

1-1. Contents of Shipping Box 7
1-2. Keep Your Packing Materials 7
1-3. What's Next? 7

Section 2: Production Description

2-1. Machine Characteristics 8
2-2. Parts Identification List 8

Section 3: Set-Up/Connections

3-1. Terminal Connection Panel 9
3-2. Operator Touch Panel Keypad 9
3-3. Mouse Connection 10
3-4. Cable Connections 11
3-5. Image Size (Projector-to-Screen Distance) 12

Section 4: Operating Instructions

4-1. Power Up/Projector 13
4-2. Standby Mode 14
4-3. Projector Power Down 14
4-4. Using System Menus 14
4-5. Menu Adjustments/Settings 15

Section 5: Remote Control

5-1. Remote Control Functions 19
5-2. Meaning of the Icons 20
5-3. Battery Replacement 22

Section 6: Maintenance

6-1. Replacing the Air Filter 23
6-2. Replacing Projection Lamp 24
6-3. Lamp Life Indicator 25
6-4. Cleaning the Projector 25

Section 7: Troubleshooting

7-1. Troubleshooting Problems & Solutions 26
7-2. Service Information 27

Section 8: Product Specifications

8-1. Technical Specifications 28
8-2. Accessory & Spare Parts List 29
8-3. How to Order 30

Appendix 31

Appendix is in English only.
Please click here to read it.

Introduction

Intended Use

Before operating the machine, please read the entire manual thoroughly. The 3M Multimedia Projector MP7760 was designed, built, and tested for use indoors, using 3M lamps and nominal local voltages. The use of other replacement lamps, outdoor operation, operation in environments containing heavy cigarette smoke or different voltages has not been tested and could damage the projector or peripheral equipment and/or create potentially unsafe operationg conditions.

Important Safeguards

1. Read and understand all instructions before using. Pay particular attention to areas where these symbols are shown:

WARNING	**Indicates a potentially hazardous situation which, if not avoided, could result in death or serious injury.**
Caution	Indicates a potentially hazardous situation which, if not avoided, could result in minor or moderate injury. It may also be used to alert against unsafe practices.

✔ ***Note*** - Used to emphasis important conditions or details.

2. Close supervision is necessary when any appliance is used by or near children. Do not leave appliance unattended while in use.

3. Never look directly into the projector lens when the lamp is on. The high pressure mercury lamp produces a strong light that could damage your eyesight.

⚠ 4. Care must be taken, as burns can occur from touching hot parts.

Caution	5. Do not operate appliance with a damaged cord or if the appliance has been dropped or damaged - until it has been examined by a qualified service technician.

⚠ 6. Position the cord so that it will not be tripped over, pulled or placed in contact with hot surfaces.

7. If an extension cord is necessary, a cord with a current rating at least equal to that of the appliance should be used. Cords rated for less amperage than the appliance may overheat.

8. Always unplug appliance from electrical outlet before cleaning and servicing and when not in use. Grasp plug and pull to disconnect.

9. To reduce the risk of electric shock, do not immerse this appliance in water or other liquids.

10. To reduce the risk of electric shock, do not disassemble this appliance. Take it to a qualified technician when service or repair work is required. Incorrect reassembly can cause electric shock when the appliance is subsequently used.

11. The use of an accessory attachment not recommended by the manufacturer may cause fire, electric shock, or injury.

12. Connect this appliance to a grounded outlet.

⚠ 13. This unit is equipped with optical lenses and should not be exposed to direct sunlight..

14. Keep ventilation openings free of any obstructions.

15. Always operate machine on a flat, sturdy surface.

16. The projection lamp contains mercury. Always dispose of it in a proper manner according to local regulations.

17. To avoid deposits forming on internal components, do not operate projector in extremely humid environments (RH > 80%) or near any type of fine mist.

© 3M IPC 2000

Product Safety Labels

Safety labels are used on or within the 7760 projector to alert you to items or areas requiring your attention.

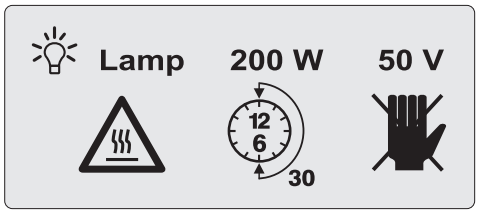

Inside of projector gets very HOT! Allow internal parts to cool before replacing the lamp.

Location of Product Safety Labels

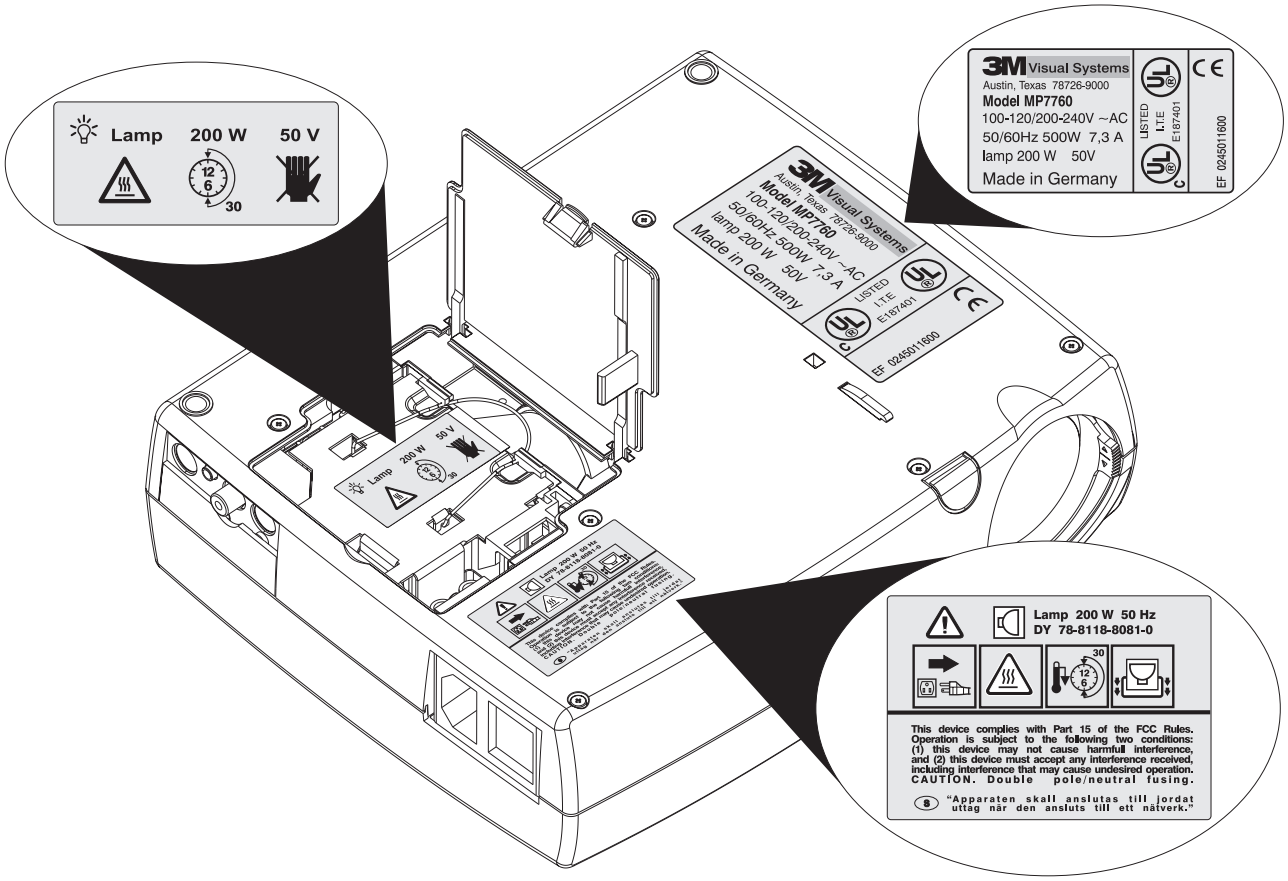

Save These Instructions

The information contained in this manual will help you operate and maintain your 3M™ MP7760 Multimedia Projector.

Thank you for choosing 3M

Thank you for choosing 3M multimedia projection equipment. This product has been produced in accordance with 3M's highest quality and safety standards to ensure smooth and troublefree use in the years to come.

For optimum performance, please follow the operating instructions carefully. We hope you will enjoy using this high performance product in your meetings, presentations, and training sessions.

Warranty

Limited Warranty

3M warrants this product against any defects in material and workmanship, under normal usage and storage, for a period of two years from date of purchase. Proof of purchase date will be required with any warranty claim. In the event this product is found to be defective within the warranty period, 3M's only obligation and your exclusive remedy shall be replacement of any defective parts (labor included). To obtain warranty service, immediately notify the dealer from which you purchased the product of any defects. In the USA call 1-800-328-1371 for warranty or repair service.

Limitation Of Liability

THE FOREGOING WARRANTY IS MADE IN LIEU OF ALL OTHER WARRANTIES, EXPRESSED OR IMPLIED, AND 3M SPECIFICALLY DISCLAIMS ANY IMPLIED WARRANTY OF MERCHANTIBILITY AND FITNESS. 3M SHALL NOT BE LIABLE FOR ANY DAMAGES, DIRECT, CONSEQUENTIAL, OR INCIDENTAL, ARISING OUT OF THE USE OR INABILITY TO USE THIS PRODUCT.

Important: The above warranty shall be void if the customer fails to operate product in accordance with 3M's written instructions. This warranty gives you specific legal rights, and you may have other rights which vary from state to state.

FCC STATEMENT - CLASS A: This equipment generates, uses and can radiate radio frequency energy, and if not installed and used in accordance with the instruction manual, may cause interference to radio communications. It has been tested and found to comply with the limits for a Class "A" computing device pursuant to Subpart B of Part 15 of the FCC Rules, which are designed to provide reasonable protection against such interference when operated in a commercial environment. Operation of this equipment in a residential area is likely to cause interference, in which case the user at his/her own expense will be required to take whatever measures may be required to correct the interference.

EEC STATEMENT: This machine was tested against the 89/336/EEC (European Economic Community) for EMC (Electro Magnetic Compatibility) and fulfills these requirements.

Video Signal Cables: Double shielded coaxial cables (FCC shield cable) must be used, and the outer shield must be connected to the ground. If normal coaxial cables are used, the cable must be enclosed in metal pipes or in a similar way to reduce the interference noise radiation.

Video Inputs: The input signal amplitude must not exceed the specified level.

Patents, Trademarks & Copyrights

IBM is a registered trademark of **International Business Machines Corporation. USB** is copyrighted by **USB Implementers Forum. Apple Macintosh** and **ADB** are registered trademarks of **Apple © Computer, Inc. Microsoft Windows** is a trademark of the **Microsoft Corporation. DLP™** is a trademark of **Texas Instruments Incorporated.** All other products are trademarks or registered trademarks of their respective companies.

 © 3M IPC 2000

Section 1: Unpack

1-1. Contents of Shipping Box

The MP7760 is shipped with the necessary cables required for standard VCR, PC or laptop computer connections. Carefully unpack and verify that you have all of the items shown below in Figure 1-1. If any of these items are missing, please contact your place of purchase.

Item	Quantity
1. MP7760 Multimedia Projector	1
2. IR Remote Control transmitter	1
(Two AAAbatteries included)	2
3. Power cord set (US, UK, Europe)	1
4. VGA-RGB cable (2m)	1
5. RCA Composite video cable (3m)	1
6. S-VHS video cable (3m)	
7. Audio cable RCA to 3.5 mm stereo	1
8. Serial-Mouse cable	1
9. PS/2-Mouse-Adapter	1
10. Operator's Guide, 7 languages (on CD-ROM)	
11. Quick-Setup-Guide (not shown)	1

✓ ***Note: A set of cables/adapters for connection to Apple Macintosh computers is available as an option.***

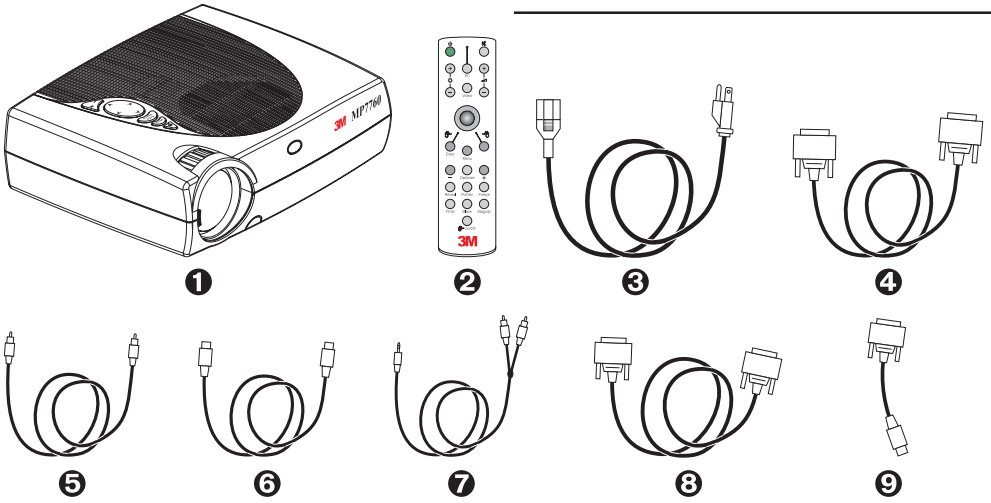

Figure 1-1. Packing List

1-2. Keep Your Packing Materials

Save the shipping box and packing materials in the event the MP7760 should require shipping to a 3M Service Center for repair. *Use packing material to protect projector.*

1-3. What's Next?

Take a few minutes to review Section 2 to familiarize yourself with the MP7760 machine characteristics and then turn to Section 3 to set up the projector.

We hope you will enjoy using this high performance product in your meetings, presentations and training sessions. This product has been produced in accordance with 3M's highest quality and safety standards to ensure smooth and trouble-free use in the years to come.

Section 2: Production Description

2-1. Machine Characteristics

The MP7760 integrates NTP lamp and Digital Light Processor (DLP) technology. It accepts input from computer and/or video sources and projects a super bright image.
The MP7760 Multimedia Projector is easy to set up and use. It offers the following features:

* Extremely light weight and portable
* NTP projection lamp 200W
* VGA (640 x 480) expansion
* SVGA (800 x 600) expansion
* XGA (1024 x 768) native resolution
* SXGA (1280 x 1024) compressed
* NTSC, PAL, SECAM compatible
* Ability to display 16.7 million colors
* Computer RGB input connection
* Built-in Serial, PS/2, ADB and USB mouse emulation
* Audio input (Stereo will be converted to mono)
* Video input connections (S-VHS and Composite video)
* Full function remote control
* Horizontal and vertical image inverting function allows rear screen projection
* On-Screen menu for easy projector set up
* Menus display in English, German, French, Spanish, Italian, Dutch, Swedish

2-2. Parts Identification List

1. Infrared Remote Control Transmitter
2. Exhaust Fan
3. Mono Speaker
4. Operator Touch Panel
5. Projection Lens
6. Release Button (Height Adjustment Foot)
7. Height Adjustment Foot
8. Infrared Sensor
9. AC Power Switch
10. AC Power Connection
11. Terminal Connections
12. Air intake/air filter

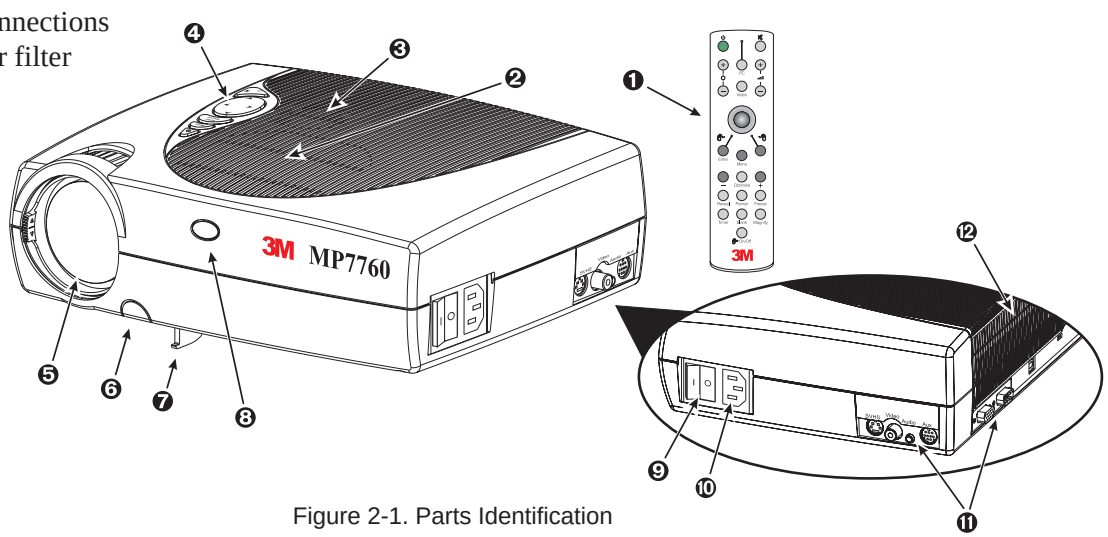

Figure 2-1. Parts Identification

 © 3M IPC 2000

Section 3: Set-Up/Connections

3-1. Terminal Connection Panel

The MP7760 projector has terminal connections on the backside of the projector. Refer to Section 3.4-Cable Connections for more detail.

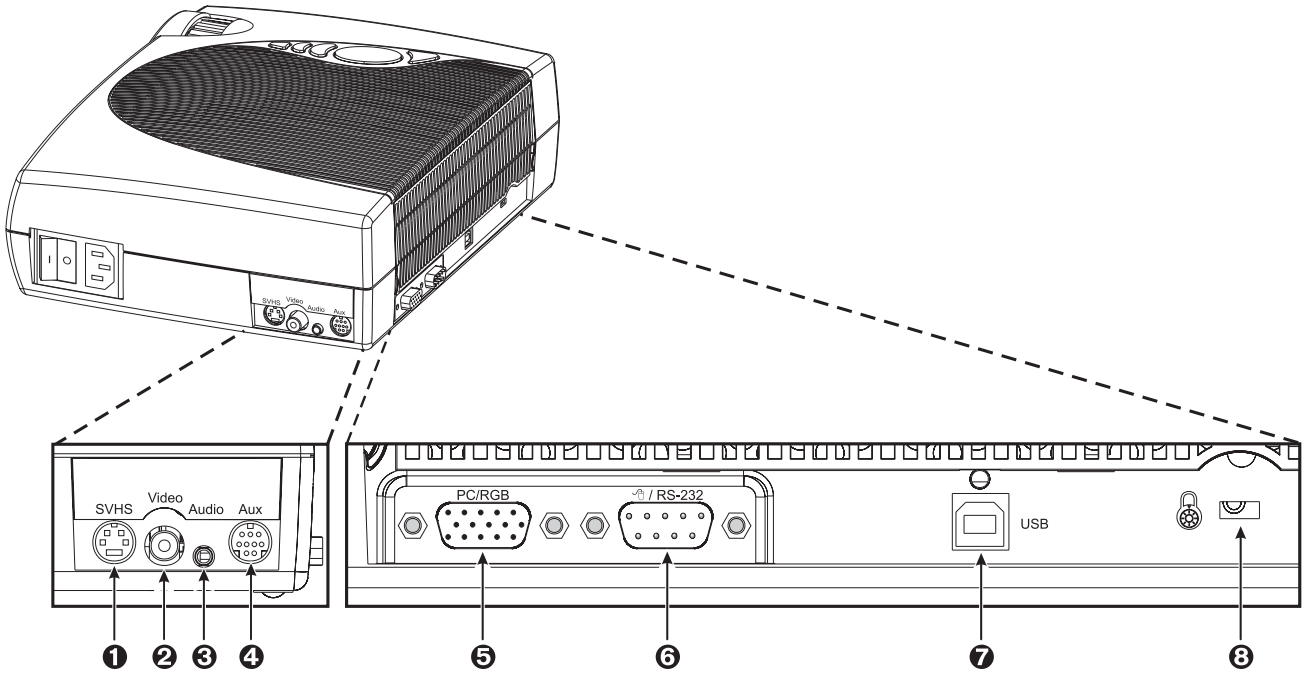

Figure 3-1. Input Connection Terminals

1. **SVHS:** S-VHS video input.
2. **VIDEO IN:** Composite video input.
3. **AUDIO IN:** Audio input (Stereo converted to mono).
4. **AUX IN:** Auxilary/Camera input. Only compatible with 3M devices.
5. **PC/RGB IN:** RGB video input from computer.
6. **RS-232C (Serial Port):** Mouse emulation/External projector control.
7. **USB:** USB-Mouse emulation output.
8. **Kensington Security Lock** (Anti-theft protection)

3-2. Operator Touch Panel Keypad

The MP7760 operator touch panel keypad (Figure 3-2) is located on top of the projector.
Refer to Section 4 for more detail on using the keypad.

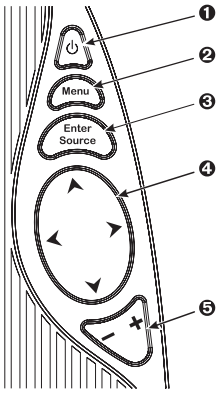

Figure 3-2. Operator Touch Panel

1. **Standby:** Switch between standby mode (lamp off, fan off after cool down) and projection mode (lamp on, fan on).
2. **Menu:** Display/remove menus.
3. **Enter/Source:** Initiate drop windows, toggle check box (On/Off), display Info sub-menu in menu mode.
   Toggles input source outside menu mode between: PC/RGB, Video, S-VHS and AUX input.
4. **Disc-Pad:** Move cursor up/down, left/right.
5. **-/+:** Decrease/increase menu value in menu mode. Decrease / increase volume outside menu mode.

3-3. Mouse Connection

The MP7760 has mouse emulation capability. Connect your computer mouse to the MP7760 and control computer mouse functions using the remote control.

1. Power down the computer and projector.
2. Remove the mouse cable connection from your computer mouse port.
3. Connect the 9-pin D-Sub plug on the mouse cable to the RS-232 port on the projector. *(Not necessary for USB mouse emulation!)*
4. RS-232 Serial Mouse: Connect 9-pin D-Sub plug on mouse cable to the serial port on the computer.
   PS/2 Mouse: Connect 9-pin D-Sub plug on mouse cable to PS/2 adapter and connect the 6-pin Mini-DIN adapter plug to the PS/2 port on the computer.
   MAC ADB: Connect 9-pin D-sub plug on mouse cable to the Mac ADB adapter and connect the 4-pin Mini-DIN plug on ADB adapter to the ADB port on the computer.
   (The Mac ADB adapter is an accessory item that must be ordered separately.)
   USB Mouse: Connect 4-pin USB mouse cable to the computer USB port or to a free USB hub port. On first startup, the computer will ask for device driver installation and configuration.
   (The USB mouse cable is an accessory item that must be ordered separately.)

✓ ***Note: For serial mouse connections to a laptop computer, refer to the manufacturer's operating instructions. The internal pointing device or serial port configurations may need to be changed.***

5. First, power on the projector, then power on the computer.

✓ ***Note: Mouse emulation only works when all cable connections are established and the proper start up sequence is followed. See section 4-1.***

✓ ***Note: The recommended mouse drivers for mouse emulation is the Standard Microsoft Mouse, Serial or PS/2.***

3-4. Cable Connections

1. Turn off all power to the projector and input sources during cable hook-up.

Caution To prevent **damage to equipment,** all power to MP7760 and input sources must be turned OFF during cable hook-up.

2. Connect cables, being careful not to bend any pins in the cable plug or input terminal (Figure 3-1).
3. Start up projector, then start up input sources (Section 4-1).

 © 3M IPC 2000

Cable Connection, continued

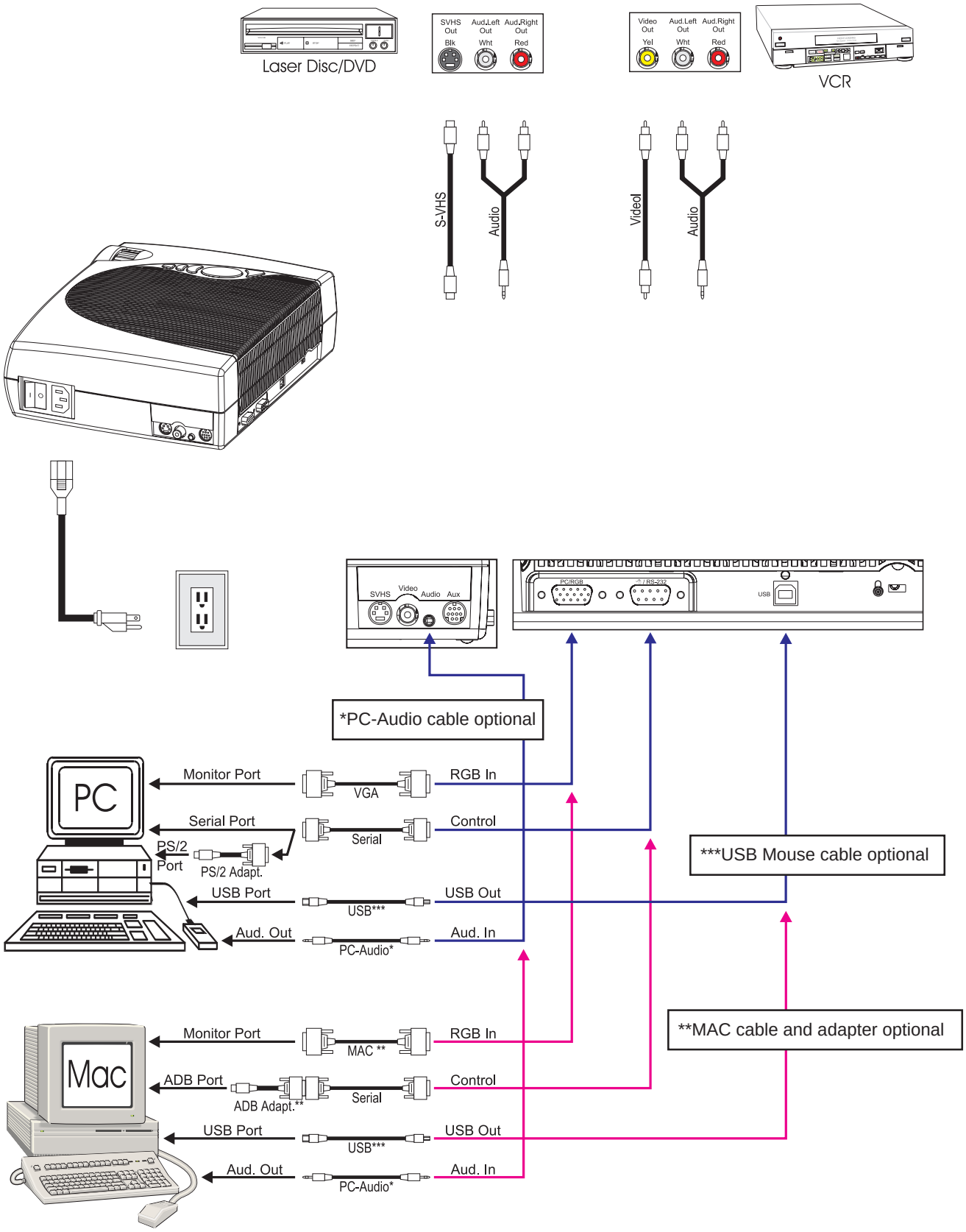

Figure 3-3. Cable Connections

3-5. Image Size (Projector-to-Screen Distance)

Adjust the size of the projected image by using the zoom ring on the upper side of the projection lens. Figure 3-4.
The projected image size values, as they relate to the distance-to-screen value, are shown for focal lengths of f=28mm and f=36.2mm. Figure 3-5.
.

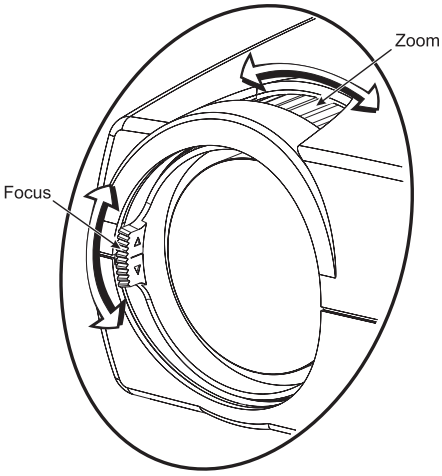

Figure 3-4. Adjusting Focus and Zoom

Distance to Screen m (ft.)	Maximum (f = 28 mm)		Minimum (f = 36.2 mm)	
	Image Width m (in.)	Image Height m (in.)	Image Width m (in.)	Image Height m (in.)
Min. 1.50 (4.92)	0.92 (36.2)	0.69 (27.2)	0.70 (27.6)	0.53 (20.9)
2.50 (8.20)	1.54 (60.6)	1.15 (45.3)	1.19 (46.9)	0.89 (35.0)
3.00 (9.84)	1.85 (72.8)	1.39 (54.7)	1.43 (56.3)	1.07 (42.1)
5.00 (16.40)	3.09 (121.7)	2.32 (91.3)	2.39 (94.1)	1.79 (70.5)
7.00 (22.97)	4.34 (170.9)	3.25 (128.0)	3.35 (131.9)	2.51 (98.8)
10.00 (32.81)	6.20 (244.1)	4.65 (183.1)	4.79 (188.6)	3.59 (141.3)

Figure 3-5. Image Size

 © 3M IPC 2000

Section 4: Operating Instructions

4-1. Power Up Projector

Read the Important Safeguards before operating the MP7760 projector. After all cable connections have been completed, the projector can be powered up. During operation, keep the exhaust and intake air vents clear of obstructions to allow proper cooling.

Caution Allow a projector that has been stored in a cold place to warm up to room temperature before applying power.

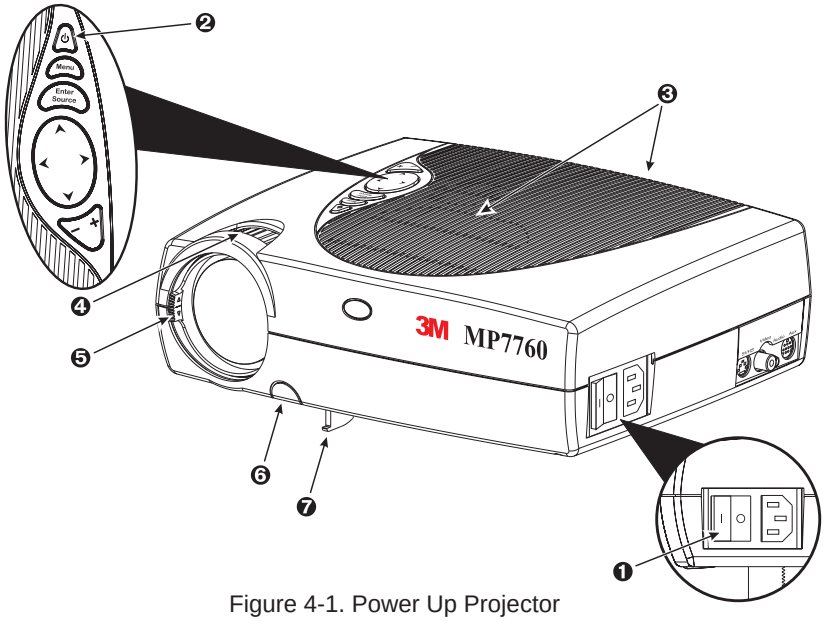

Figure 4-1. Power Up Projector

1. Press the **Main Power switch** ❶ to ON. A red LED indicator in **Standby button** ❷ will illuminate to indicate there is power.
2. Press the **Standby button** ❷ to illuminate the lamp. The red LED indicator will turn green as an image appears and grows brighter on the screen.
3. Check all **ventilation slots** ❸ and clear away all obstructions.

✓ ***Note: Ventilation vents are located on the top and back of the projector. Do not block airflow by placing objects on top of the projector.***

4. Adjust the **Zoom** ❹ and **Focus** ❺ for best image.
5. Press the **Foot Release button** ❻ to release the **Height Adjustment Foot** ❼.
6. Power up your computer and video source(s).

✓ ***Note: In most cases, the projector will automatically adjust to the graphic mode of your computer by selecting a pre-programmed setting.***

4-2. Standby Mode

When the projector is not being used, place it into standby mode.

1. Press the **Standby** button.
2. The lamp will switch off and the red LED will illuminate.

✓ ***Note: The fan motor will continue to run for a few minutes until the projector cools down and then the fan will turn off.***

3. Press the **Standby** button again to illuminate the lamp and project an image on the screen.

4-3. Projector Power Down

1. Press the **Standby** button to place the projector in the standby mode (red LED illuminates).
2. Wait until the cooling fan motor cycles off.

✓ ***Note: Switching the main power off before the fan has cycled off will decrease the life of the projection lamp.***

3. Press the **Main Power** switch to **Off.**
4. Turn off the power to your input devices.
5. Install lens cap to protect projection lens.
6. To transport the projector, disconnect all power and connection cables.

4-4. Using System Menus

Main Menu: Press the **Menu** button on the operator touch panel keypad (Figure 3-3) or the remote control keypad (Figure 5-1) to display the Main Menu.

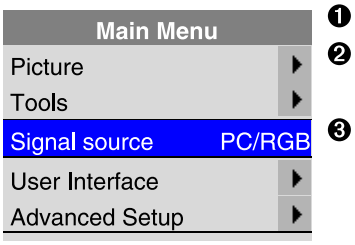

The ***menu name*** is on the top line.
An ***arrowhead*** at the right of a menu line indicates that this item is a sub-menu that can be selected.
A ***text field*** at the right of a line indicates that this is a value that you can change in a drop down window.
Info: Press **Enter** to display the Info window.

To select a sub-menu, press the **Disc Pad** or **Joystick** up or down to highlight (select) the desired sub-menu. Then press the **Disc Pad** or **Joystick** to the right or the **Enter** button to display the sub-menu (see Sub-Menu).

To change a text field value, press the **Disc Pad** or **Joystick** up or down to highlight (select) the menu line. Then press the **Disc Pad** or **Joystick** to the right or the **Enter** button to display a drop-down window of all the possible values. Use the **Disc Pad** or **Joystick** to select a value and press **Enter** to initiate the selection.

To exit a sub-menu, press the **Disc Pad** or **Joystick** to the left.

To completely exit the menu system and return to the projected image, press the **Menu** button.

 © 3M IPC 2000

Sub-Menu: Select the desired sub-menu (see Main Menu). Press the **Disc Pad** or **Joystick** to the right or the **Enter** button to display the sub-menu.

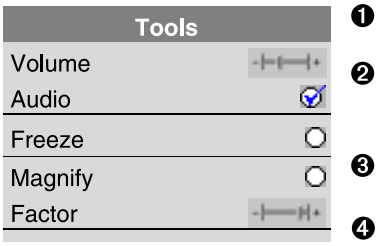

The ***sub-menu name*** is on the top line.
A ***check box field*** at the right of a sub-menu line indicates that you can toggle that value On/Off by pressing the **Enter** button.
A ***slider bar*** at the right of a sub-menu line indicates you can increase or decrease the value.
A ***number field*** at the right of a sub-menu line indicates that you can change it.

To change a slider bar value, it must be highlighted. Press the **-/+** button on the remote control or on the operator touch panel to decrease or increase the value.

To change a number field, press the **Disc Pad** or **Joystick** up or down to highlight (select) the menu line. Then press the **-/+** button on the remote control or on the operator touch panel to decrease or increase the amount of the value.

4-5. Menu Adjustments/Settings

The following charts lists all the menu items that can be adjusted along with the default settings.

Main Menu	Description / Action	Default Setting
Picture	Display picture sub-menu	
Tools	Display tools sub-menu	
Signal source *(drop down window)*	Select input source (PC/RGB / SVHS / VIDEO / AUX)	According to search procedure
User Interface	Display user interface sub-menu	
Advanced Set-up	Display advanced set-up sub-menu	
Info	Display information window (press **Enter**)	

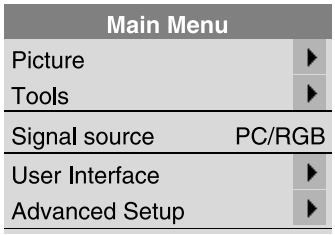

In active PC/RGB mode

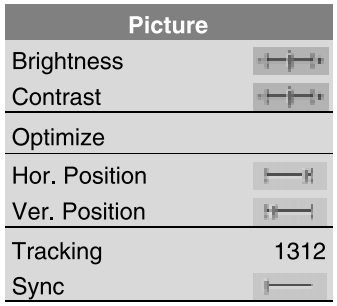

Picture *(PC/RGB)* Sub-Menu Items	Description / Action	Default Setting
Brightness	Adjust the brightness	
Contrast	Adjust the contrast	
Optimize	Searches best brightness for image	
Hor. Position	Adjust horizontal position of image	
Tracking	Adjust number of pixels per line	
Sync	Adjust phase synchronization	
Mode	Select data mode to adjust within this menu (Predefined modes / User Mode 1...3)	<Automatic>
Resolution *(drop-down window)*	Select pixel resolution (640 x 350 / 720 x 350 / 640 x 400 / 720 x 400 / 1024 x 768 / 1152 x 864 / 1152 x 870 / 1152 x 900 / 1280 x 960 / 1280 x 1024)	

4-5. Menu Adjustments/Settings, continued

In active Video mode

Picture *(Video)* Sub-Menu Items	Description / Action	Default Setting
Brightness	Adjust the brightness	
Contrast	Adjust the contrast	
Color	Adjust color saturation	
Tint	Adjust HUE for NTSC	

Tools Sub-Menu Items	Description / Action	Default Setting
Volume	Adjust volume	
Audio	Audio mute -on / -off	-on
Freeze	Freeze frame -on / -off	-off
Magnify	Magnify mode -on / -off	-off
Factor	Adjust magnification factor	
Timer	Select timer mode (off / small / large)	off
Minutes	Adjust timer countdown (1 to 90 minutes)	10 minutes

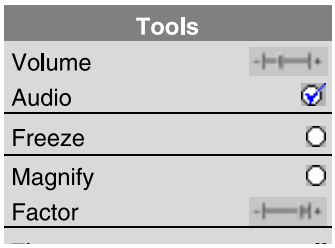

User Interface Sub-Menu Items	Description / Action	Default Setting
Language *(drop-down window)*	Select user interface language (English / Deutsch / Français / Español / Italiano / Nederlands / Svenska)	English
Blank Screen Color *(drop-down window)*	Select color of Blank Screen (Black / Red / Green / Blue / Yellow / Cyan / Magenta / White)	Black
Graphics	Activate on-screen status bars indicators and icons (e.g.,) -on / -off	-on
Reset Window Position	Reset all menu window positions to default position	
Help	Select Help window mode (immediate / 1, 3, or 5 seconds / off)	3 seconds

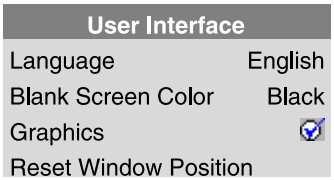

 © 3M IPC 2000

4-5. Menu Adjustments/Settings, continued

In active PC/RGB mode

Advanced Set-Up *(PC/RGB)* Sub-Menu Items	Description / Action	Default Setting
Projection *(drop-down window)*	Select projection orientation (Standard / Rear / Rear/Top Down / Top/Down)	Standard
Remote Control	Remote control receiver ☑ -on / ○ -off	☑ -on
RC Address	Select remote control address (1 / 2 / 3 / 4)	1
Sync Mode *(drop-down window)*	Select Sync Mode for PC/RGB (separate TTL / composite TTL / separate ana. / composite ana. / sync on green)	separate TTL
SOG Level	Adjust level for sync on green synchronization	
Reset Data Modes	Set all data modes to factory default settings	
Reset Lamp Display	Resets the lamp hours displayed in the Info window	
Test	Display test sub-menu	

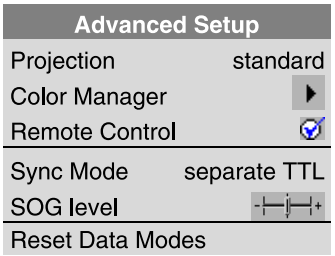

In active Video mode

Advanced Set-Up *(Video)* Sub-Menu Items	Description / Action	Default Setting
Projection *(drop-down window)*	Select projection orientation (Standard / Rear / Rear/Top Down / Top/Down)	Standard
Remote Control	Remote control receiver ☑ -on / ○ -off	☑ -on
RC Address	Select remote control address (1 / 2 / 3 / 4)	1
Video Standard *(drop-down window)*	Select Video Standard (PAL B, G, H, I / NTSC M / SECAM / NTSC 44 / PAL M / PAL N / PAL 60 / NTSC COMB / Automatic)	Automatic
Reset Lamp Display	Resets the lamp hours displayed in the Info window	
Test	Display test sub-menu	

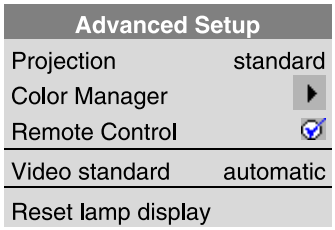

4-5. Menu Adjustments/Settings, continued

Color Manager Sub-Menu Items	Description / Action	Default Setting
Brightness red	Adjust brightness for red portion	
Contrast red	Adjust contrast for red portion	
Brightness blue	Adjust brightness for blue portion	
Contrast blue	Adjust contrast for blue portion	
Default	Sets color settings to default values	

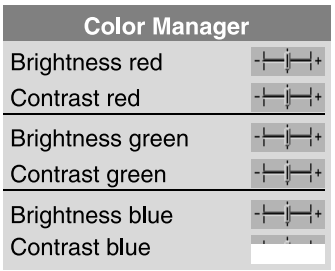

Test Sub-Menu Items	Description / Action	Default Setting
Parameter Display	Parameter display window ☑-on / ○-off	○-off
Color test picture	Display color test picture	
Frame test picture	Display frame test picture	

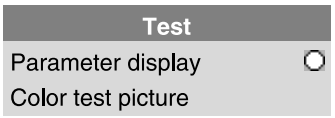

Info (display only)	Description / Action	
Hardware	Current hardware level	
Firmware	Current firmware level	
VESA XXXXXXXXX	Current data or video mode	
Lamp *(bar indicator)*	Lamp life hours (Green: lamp good / Red: lamp needs replacement)	
OK!	Closes the Info display by pressing the **Enter** button	

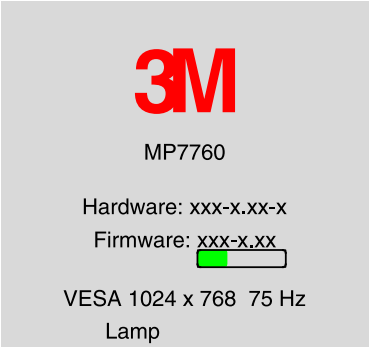

 © 3M IPC 2000

Section 5: Remote Control

5-1. Remote Control Functions

Aim the remote control toward the projection screen or at the sensor. Press desired remote button to send a signal to the projector.

***Standby:**
Switch the projector between Standby mode (lamp off, fan off) and Operation mode (lamp on, fan on).

Brightness: Decrease (-) or increase (+) brightness of the displayed image.

***Enter:**
In mouse emulation mode:
Left mouse button (**L**).
Not in mouse emulation mode:
Enter button for confirmation of a selection.

***Menu:** Display system menus.

***(-/+):** Decrease (-) or increase (+) menu values or magnify factor.

Reveal:
Press **Reveal** to cover the image on the screen with a gray mask. Use the **Joystick** to reveal the image. Press **Reveal** again to return.

Timer: Display timer (window in lower part of screen or full screen). Repeated operation of key toggles between.

Blank:
Replace projected image with preselected background blank color. Press again to return to image.

Mouse:
Toggle mouse emulation On/Off.
On: The **L** & **R** buttons operate.
Off: **L** button is the **Enter** confirmation button. **R** button is for menu window positioning. **Disc Pad** Centers the image.

Mode 1, 2, 3, 4:
Toggle between remote control addresses 1, 2, 3, 4. (See Appendix A-3.)

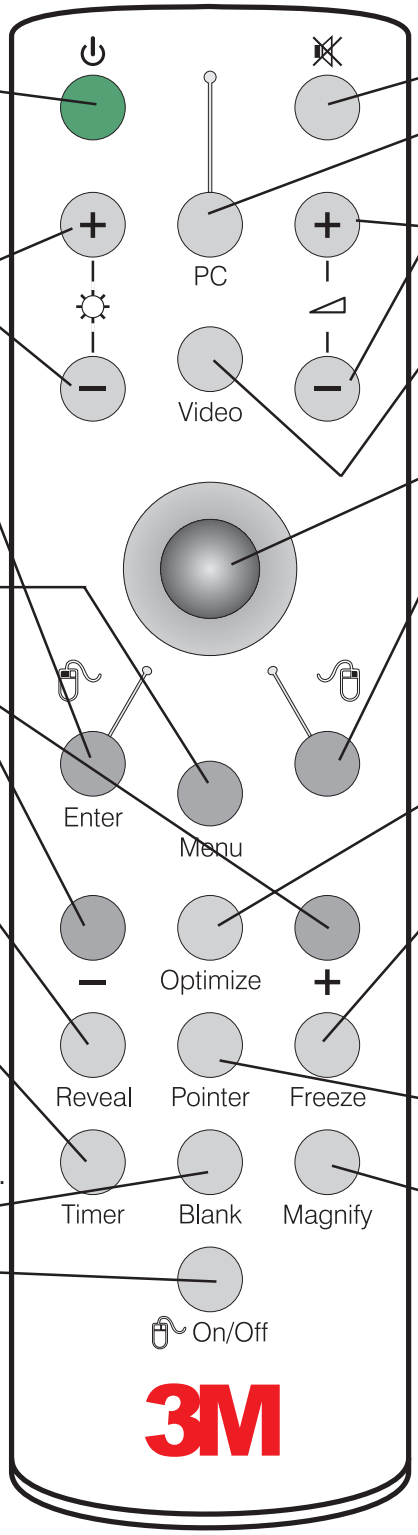

Figure 5-1. Remote control functions

Mute:
Toggle On/Off the audio sound.

PC:
Switch displayed image to PC/RGB input.

***Volume:** Decrease (-) or increase (+) speaker volume.

Video:
Switch displayed image to video input. In Video mode toggles between: Video / SVHS / AUX

***Joystick** (mouse pointer):
Move (point) the cursor on the projected image. (See Pointer.) Navigate menus.

***Menu window position:**
In mouse emulation mode:
Right mouse button (**R**).
Not in mouse emulation mode:
Keep button pressed while moving menu window around with the **Joystick.**

Optimize:
Adjust brightness and contrast for best picture.

Freeze: Stores (freezes) the projected image. Press again to return to the projection of the current image.

Pointer:
Places a pointing device on the screen. Use **Joystick** to move pointer. Press again to turn pointer off.

Magnify: Press to enable magnification mode. Press **-/+** buttons to decrease/increase the magnification factor. Move **Joystick** to displace the magnified area within the image. Press Magnify again to toggle back to normal presentation.
In video mode (NTSC only), press Magnify to toggle between scaled and unscaled representation.

Note: The buttons marked with an asterisk (*) also appear on the operator touch panel keypad.

5-2. Meaning Of The Icons

An icon will display to indicate a presentation tool is active.

Pointer mode
Activate with **Pointer** key on IR-Remote control

In the **Pointer** mode you can move a pointer over and around the picture area.
By pressing the **Pointer** key on the remote control a second time it will be turned off.

Freeze mode
Activate with **Freeze** key on IR-Remote control

In the **Freeze** mode the picture will be frozen.
Pressing the **Freeze** key on the remote control a second time or the **Magnify** key, the freeze mode will be turned off.

Magnify mode
Activate with **Magnify** key on IR-Remote control

In the **Magnify** mode the image can be magnified (zoomed). With the **-** and **+** keys you can decrease or increase the magnifying factor. You can select the magnified area by using the **Joystick.**
Pressing the **Magnify** key on the remote control a second time, the magnify mode will be turned off.

Reveal mode
Activate with **Reveal** key on IR-Remote control

In the **Reveal** mode the picture will be covered by a gray sheet. You now can reveal the covered image by using **Joystick.** Pressing the **Reveal** key on the remote control a second time, the **Reveal** mode will be turned off.

Muting mode
Activate with **Mute** key on IR-Remote control

In the **Muting** mode the sound output of the projectors internal speakers and the external output will be muted. Pressing the **Mute** key on the remote control a second time, the **Muting** mode will be turned off.

Mouse emulation (Only in data mode [PC/RGB] available!)
Activate with **Mouse** key on IR-Remote control

If you've connected the projector with the mouse cable and the right adapters to your PC and turned on the projector before booting the PC it will emulate a mouse over the IR remote control transmitter.
By pressing the **Mouse** key on the IR remote control the mouse emulation will be activated. You can move arround the mouse pointer with the **Joystick.** The mouse keys will be emulated by the two buttons left and right beside the **Joystick.** The mouse emulation can be turned off by pressing the **Mouse** key a second time.

 © 3M IPC 2000

5-2. Meaning Of The Icons, continued

Question mark
A question mark in a box will appear if the projector can't recognize the mode of the data input source.

Even if you select a standard VESA mode on your system this can happen, because some device drivers of the graphic cards in the PC using timing parameters which differ from the parameters given out from the VESA organization.

As a result of this, the projector may detects a wrong predefined data mode or switches to a User mode, so you may see only a part of the whole picture.

To correct this situation you must select manually a data Mode in the **Picture** menu which should match the mode you've selected on the PC. If there is no matching mode you must select a User mode.

In a User mode you can manually select the Resolution which is normally not choosable.

It may be necessary to correct the Horizontal and Vertical Position and the Tracking and Sync values in the **Picture** menu. These values will be stored so the mode can be recognized the next time.

If you've accidently misadjusted the values of a standard predefined data mode, you can reset them by selecting **Reset Data Modes** in the **Advanced Set-up menu.** The settings of a User mode won't be affected by this action.

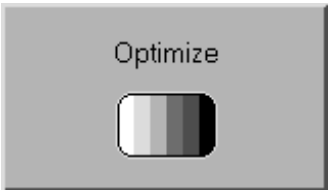

Optimize
The image optimize process ist just working—please wait a few seconds!

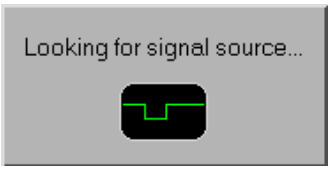

Looking for signal source...
The projector can not find any input signal on the video and data inputs.

Either there is no input source connected to the projector or the source is giving no output signal.
For RGB/PC input sources you may must select manualy another Sync Mode recognition in the **Advanced Set-up menu.**

5-3. Battery Replacement

The remote control uses two AAA batteries. The battery cover is located on the back of the remote control.

1. Press the **locking button** to release door. (Figure 5-1)
2. Move the **door** to the right to remove it and set it to the side.
3. Remove old batteries.
4. Install new batteries. Make sure the polarity (+/-) on each battery matches the decal.
5. Replace battery compartment door.

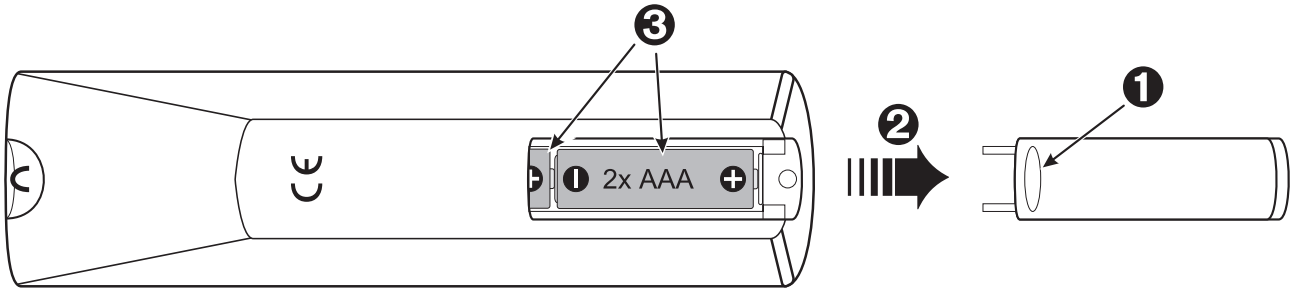

Figure 5-1. Replacing Batteries

 © 3M IPC 2000

6-1. Replacing The Air Filter

For best performance, replace the air filter each time the projection lamp is changed.

✓ ***Note: Periodically check air filter for excess dust or dirt. Replace or clean as needed!***

1. Switch off the unit and unplug the **power cord** ① of the projector.
2. Remove the **back panel** ②**:**
   ❶ Press the left and the right tabs of the back panel with your finger tips to the middle of the back panel.
   ❷ Pull the lower end of the back panel towards yourself.
   ❸ Pull out the back panel with the air filter.
3. Separate the **air filter** from the back panel ③.
4. **Vacuum** ④ the air filter to remove the dust and dirt.
5. Insert the **air filter** in the back panel.
6. Insert the back panel the reverse way until **both tabs** of the back panel snap in.

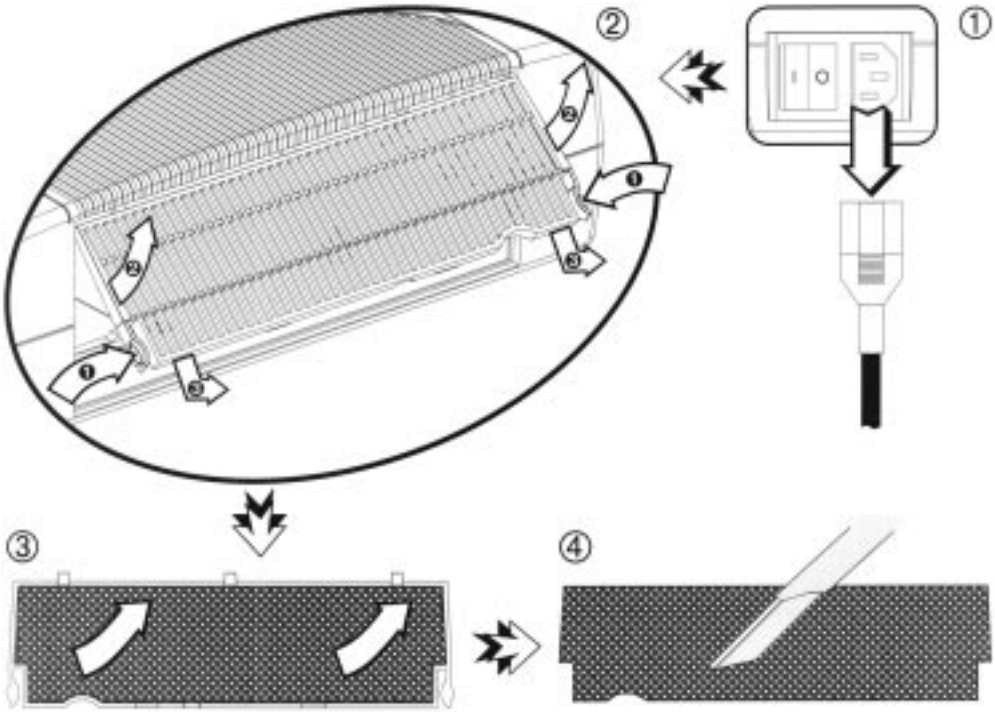

Figure 6-1. Changing the Air Filter

6-2. Replacing Projection Lamp

The metal halide lamp of the projector has a limited lifetime of approximately 1500 hours. If the projected image appears dark or a red lamp life indicator bar displays during projector startup, you should change the lamp and air filter.

✓ ***Important Note:***
This lamp contains mercury. Consult your local hazardous waste regulations and dispose of this lamp in a proper manner.

Caution Always switch off the unit and unplug the projector when changing the lamp. There are high voltage parts inside the cabinet that may cause electric shock.

Caution Allow the projector to cool down for 30 minutes. Lamp and adjacent metal parts become extremely hot and can cause burns to your fingers.

1. Press the **Standby** button on the operator touch panel or remote control.
   Wait for the fan motor to cycle off.
2. Turn the **main power switch** to **OFF** and unplug the projector power cord.
3. Set the projector on a sturdy surface with the bottom of the projector facing you.
4. Press ① the **lock tab ❶** of the **lamp door ❷** with your finger. Pull outward on the **lamp door ❷** to bring it to the up position and access the **lamp cartridge ❸.**
5. Press both sides ③ of the **metal shackle ❹** securing the **lamp cartridge ❸.**
6. Grasp ④ **metal shackle ❹** and carefully pull ⑤ the **lamp cartridge ❸** out of the projector.
7. Carefully insert ⑥ the new **lamp cartridge ❸** and secure ⑦ with **metal shackle ❹** behind the **secure tabs ❺.**
8. Close ⑧ the **lamp door ❷** tightly until the **lock tab ❶** slides into the locked position.
9. Go to the **Advanced Set-up menu** and reset the **lamp life display** to zero.

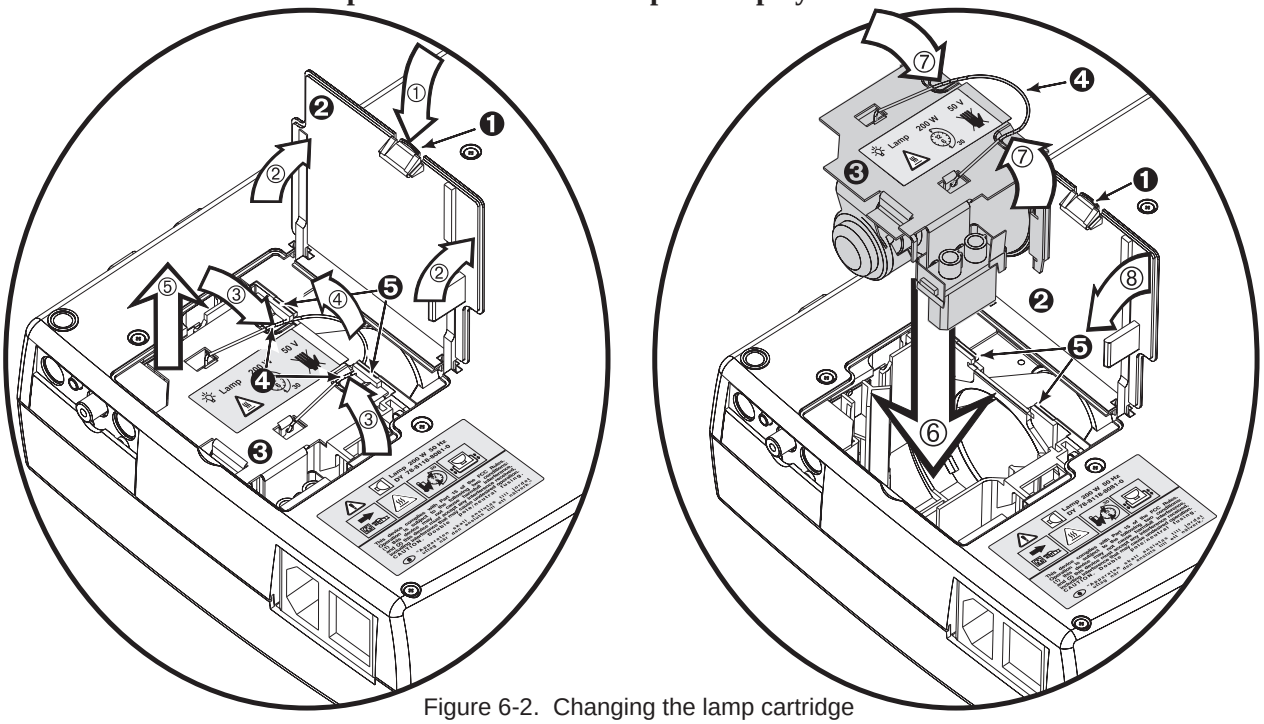

Figure 6-2. Changing the lamp cartridge

 © 3M IPC 2000

6-3. Lamp Life Indicator

The elapsed operating time of the lamp is displayed on the **Info** sub-menu. From the **Main** menu, select **INFO** to display the lamp life. As long as the lamp indicator bar is green, the lamp is good. When the bar changes to red, the lamp should be changed.

After changing the projection lamp, the lamp life indicator must be reset to zero.

To reset the lamp life indicator:

1. Press the **Menu** button to display the main menu.
2. Select the **Advanced Set-up sub-menu** using the **Disc Pad** or **Joystick.**
3. Select **Reset** lamp display and press the **Enter** button.
4. The following message will display: ***"Really reset lamp life display? OK! / Cancel"***
5. Using the **Disc Pad** or **Joystick,** select **OK!** and press **Enter** to acknowledge the change.
6. Press **Menu** to exit the menu system.

✓ ***Note:***

To view the used/remaining lamp life:

(1) Go to the Main Menu

***(2) Select* "Info"**

(3) Press the* Enter *button

6-4. Cleaning the Projector

For best performance, keep your projector free of excess dust and surface dirt. Use a soft cloth to remove dust from the projector housing. Use 3M™ High Performance Cleaning Cloth to remove surface dirt and smudges from the projection lens.

Caution Always unplug the projector when cleaning. Take care that no liquids get inside the projector. There are high voltage parts inside the cabinet that may cause electric shock.

Figure 6-3. Overhead Cleaner

7-1. Troubleshooting Problems and Solutions

Problem	Probable Cause	Possible Solution
Image is disturbed or unstable.	• Wrong **Sync** setting. • Wrong **Tracking** value.	• Set t**o factory default setting.** (See below.) • Change **Sync** setting in the **Picture** menu for optimum performance. • For vertical interference stripes, change the **Tracking** in the **Picture** menu for optimim performance.
No computer image projected. Message " Looking for signal..." displays.	• Loose cable. • No power to computer. • Wrong synchronization mode.	• Check and secure cable connections. • Turn on computer. • Adjust synchronization mode of the projector to the synchronization mode of the computer via the A**dvanced Set-Up** menu.
No video image projected.	• Loose cable. • No signal from video source.	• Check and secure cable connections. • Check video picture on TV.
Mouse does not work.	• Loose cable. • Wrong connection. • Wrong power up sequence.	• Check and secure cable conenctions. • For PS/2, USB and ADB (Apple) mouse a special adapter is necessary. Only use adapters from the original manufacturer (Section 8-2). • The mouse emulation operates correctly only if the correct power up sequence has been used (refer to Section 3-5).
Image off-center.	• Image position.	• Center image with the Disc Pad of the control panel or on the remote control transmitter.
Cannot get entire image on the screen.	• Wrong **Tracking** value. • Compatibility problem.	• If vertical interference stripes occur, change the **Tracking** value in the **Picture** menu for optimum performance. • Refer to the documentation for your graphics card. Change the **Resolution** setting in the **Picture** menu to the resolution of the video mode output from the computer graphics card.
Washed-out image.	• Wrong **Contras**t setting. • Wrong **Brightness** setting.	• Change **Contras**t setting in the **Picture** menu. The bar should be in the middle position. • Lower **Brightness** setting in the **Picture** menu. Choosing **Brightness** and pressing **Enter** can perform an automatic adjustment.
Humming noise. Slowly passing horizontal bars.	• Signal sources are connected to different power sources. • VCR connected to aerial system and to projector. • Bad signal.	• Locate the source of disturbance. Disconnect the sources one after another from the projector. Connect all sources to a common power source. • Remove antenna connection from VCR. If the disturbance disappears, use a by-pass filter (isolating transformer) to connect the antenna to the VCR. • Try different input source.

✓ ***Note: The factory default settings of the projector can be restored by pressing* Enter/Source *and* Menu *simultaneously on the control panel while switching on the main power switch of the projector and pressing the* Standby *button afterward.***
The projector will start immediately and the message "Parameter factory settings restored" displayed in the starting screen will indicate the default settings are reset.

 © 3M IPC 2000

7-2. Service Information

For product information, product assistance, service information, or to order accessories or spare parts, please call:

- In U.S. or Canada: **1-800-328-1371**
- In other locations, contact your local 3M Sales office.

Section 8: Product Specifications

8-1. Technical Specifications

Display Technology	Single DMD
Resolution	1,024 x 768 (total 2,359,296 pixels) 625 (PAL) / 525 (NTSC) video lines to full screen size magnification
Brightness	1000 ANSI lumens (typical)
Colors	16,770,000 colors
Contrast Ratio	300:1 (typical)
Projection Lens	Throw Ratio = 1.6 - 2.1 / f = 28.0 - 36.2 mm, Manual Zoom / Manual Focus
Picture Size	0.58 - 7.75 m (23 - 305 in.) diagonal, 2.3 m diagonal at 3.0 m distance and f = 28 mm
Projection Lamp	200 W DC NTP lamp
PC Compatibility	Resolution 640 x 400 & 800 x 600 (magnified), 1024 x 768 (native) and 1280 x 1024 (compressed) (sync on green is available)
Video Compatibility	NTSC / NTSC 4.43 / PAL (including PAL-M, N) / SECAM, PAL-60
Input Terminals	PC/RGB: RGB x 1 (D-Sub 15-pin) Video: RCA x 1 + SVHS x 1 + Camera/Aux x 1
Communication Terminals	RS-232C (Serial Port) (D-Sub 9-pin) USB for USB-mouse (B-Type connector)
Scanning Rates	Hor.: 15-110 kHz, Vert.: 50-160 Hz
Audio Speakers	1 Watt mono sound
Height Adjuster	Front leg (0° ...10° , variable)
Unique Features	Digital magnification Wireless infrared remote control
Remote Control Transmitter	Projector control, PC/MAC mouse cursor control
Dimensions (W x H x D)	257 x 83 x 216 mm (10.1 x 3.3 x 8.5 in.)
Weight	3.0 kg (6.62 lb.)
Power Requirements	AC 100-240 V ±50/60 Hz
Power Consumption	300 W
Regulatory Approvals	FCC Part 15, Class A, CE, UL
Warranty	Two years limited warranty on parts and labor

© 3M IPC 2000

8-2. Accessory & Spare Parts List

Part Description	Part Number
Projection Lamp Kit - NTP Lamp (200 W) - Air Filter	78-8118-8081-0
Air Filter (included in lamp kit 78-8118-8081-0)	78-8118-8501-7
Power Cords (U.S., UK, Europe) For special cords, see Appendix D-3.	DY-0205-1356-9 (U.S) DY-0205-1355-1 (UK) DY-0205-1354-4 (Europe)
VGA Cable (15-15 pin male/male)	DY-0205-1271-0
Video Cable (S-Video Mini-DIN-4-pin)	DY-0205-1010-2
Composite Video Cable (RCA to RCA)	DY-0205-1008-6
Scart video adapter	DY-0205-1011-0
Audio Cable (RCA to 3.5 mm stereo)	DY-0205-1359-3
PC-Audio Cable (3.5 mm stereo to 3.5 mm stereo) (optional)	26-1012-0683-2
PC Serial Cable (PC mouse connection)	DY-0205-1007-8
PS-2 Mouse Adapter	DY-0205-1240-5
Mouse Y-Cable (optional)	DY-0205-1507-7
USB Mouse Cable (USB mouse connection) (optional)	78-8118-8503-3
Mac Cable Set (optional) (only for older Macs and PowerMacs before G3-Blue and White)	DY-0205-1361-9
Extension Cable Kit (optional)	78-8118-7927-5
IR Remote Control	78-8118-8502-5
Soft Carry Case	78-9236-6521-6
Deluxe Executive Leather Case (optional)	78-6969-9144-3

Mouse Y-Cable (optional), Part number DY-0205-1507-7: This cable provides user with the option to simultaneously operate the MP7760 remote mouse and a PC mouse (only works with Microsoft serial mouse).

Mac Cable Set (optional), Part number DY-0205-1361-9: This kit contains a Mac mouse adapter and a Mac video cable.

Extension Cable Kit (optional), Part number 78-8118-7927-5: The extension cable kit includes a video amplifier and 20 m (65 ft.) video cable. The kit increases the allowable distance between the projector and the video source without burdening the video source.

8-3. How to Order

Please order these parts through your dealer, or contact 3M Customer Service at the following number:

- In U.S. or Canada: **1-800-328-1371**
- In other locations, contact your local 3M Sales office.

 © 3M IPC 2000

A-1. Power Cord Sets

A standard power cord set (US, UK, or European) will be included with each MP7760. If you need a special power cord set, contact your local 3M authorized dealer. The power cords must be in accordance with the regional and corresponding national safety regulations and be properly approved. Examples of these power cords are shown below.

North America
UL Listed CSA
Certified
15A 125VAC

Germany,
Netherlands,
Spain, France, Greece
VDE Certified
10A 250VAC

Great Britain
AUSTA Certified
13A 250VAC

Italy
IMQ or BASEC
Certified
10A 250VAC

Switzerland
SEV Certified
10A 250VAC

Australian
SAA Certified
10A 250VAC

Denmark
Complies with Danish
Standard
6/10A 250VAC

A-2. Factory Default Settings

The factory default settings of the projector can be restored by pressing Enter/Source and Menu simultaneously on the control panel when switching on the main power switch of the projector and pressing the Standby button afterward.

The projector will start immediately and the message “Parameter factory settings restored” will display in the starting screen to indicate the default settings are reset.

If you have selected another menu language as the default language (instead of English), you’ll have to select your menu language again.

 © 3M IPC 2000

A-3. Example of Computer Signals

Table of the predefined Data modes:

Data Mode Name	Resolution Hor. x Vert.	Horizontal Frequency kHz	Vertical Frequency Hz	Pixel-Clock MHz
VGA 640 x 350	640 x 350	30,000	70,000	25
VESA 640 x 350 85 Hz	640 x 350	37,861	85,081	32
VGA Text 720 x 350	720 x 350	31,469	70,087	28
VGA 640 x 400	640 x 400	25,560	60,000	25
VESA 640 x 400 85 Hz	640 x 400	37,861	85,081	32
VGA Text 720 x 400	720 x 400	31,469	70,087	28
VGA 640 x 480	640 x 480	31,469	59,941	25
VESA 640 x 480 72 Hz	640 x 480	37,861	72,810	32
VESA 640 x 480 75 Hz	640 x 480	37,500	75,000	32
VESA 640 x 480 85 Hz	640 x 480	43,269	85,008	36
VESA 800 x 600 56 Hz	800 x 600	35,156	56,250	36
VESA 800 x 600 60 Hz	800 x 600	37,879	60,317	40
VESA 800 x 600 72 Hz	800 x 600	48,077	72,188	50
VESA 800 x 600 75 Hz	800 x 600	46,875	75,000	50
VESA 800 x 600 85 Hz	800 x 600	53,674	85,062	56
VESA 1024 x 768 43 Hz	1024 x 768	35,522	86,957	45
VESA 1024 x 768 60 Hz	1024 x 768	48,363	60,004	65
VESA 1024 x 768 70 Hz	1024 x 768	56,476	70,069	75
VESA 1024 x 768 75 Hz	1024 x 768	60,023	75,029	79
VESA 1024 x 768 85 Hz	1024 x 768	68,677	84,996	95
VESA 1152 x 864 74 Hz	1152 x 864	67,500	75,000	108
VESA 1280 x 960 60 Hz	1280 x 960	60,000	60,000	108
VESA 1280 x 1024 60 Hz	1280 x 1024	63,891	60,020	108
VESA 1280 x 1024 75 Hz	1280 x 1024	79,975	75,024	136
Mac 640 x 480	640 x 480	35,000	66,667	30
Mac LC 640 x 480	640 x 480	34,975	66,619	31
Quadra 832 x 624	832 x 624	49,107	75,087	57
Mac 1024 x 768	1024 x 768	60,241	74,927	80
Mac 1152 x 870	1152 x 870	68,681	75,062	100
Mac 1280 x 960	1280 x 960	85,938	85,003	139
Sun 1152 x 900 66 Hz	1152 x 900	61,846	66,004	95
Sun 1152 x 900 76 Hz	1152 x 900	71,713	76,047	105

A-3. Example of Computer Signals, continued

Table of the predefined Resolutions for User-Mode 1...3:

Predefined Resolutions
640 x 480
720 x 350
640 x 400
720 x 400
640 x 480
800 x 600
832 x 624
1024 x 768
1152 x 864
1152 x 870
1152 x 900
1280 x 960
1280 x 1024

For more information, please refer to the CD-ROM.

 © 3M IPC 2000

Important Notice
All statements, technical information, and recommendations related to 3M's products are based on information believed to be reliable, but the accuracy or completeness is not guaranteed. Before using this product, you must evaluate it and determine if it is suitable for your intended application. You assume all risks and liability associated with such use. Any statements related to the product which are not contained in 3M's current publications, or any contrary statements contained on your purchase order shall have no force or effect unless expressly set forth in a written agreement signed by an authorized officer of 3M.

Warranty and Limited Remedy. This product will be free from defects in material and manufacture for a period of two years from the date of purchase. **3M MAKES NO OTHER WARRANTIES, INCLUDING BUT NOT LIMITED TO, ANY IMPLIED WARRANTY OF MERCHANTABILITY OR FITNESS FOR A PARTICULAR PURPOSE.** If this product is defective within the warranty period stated above, your exclusive remedy shall be, at 3M's option, to replace or repair the 3M product or refund the purchase price of the 3M product.

Limitation of Liability. Except where prohibited by law, 3M will not be liable for any loss or damage arising from this 3M product, whether direct, indirect, special, incidental or consequential regardless of the legal theory asserted.

Let us help you make the most of your next presentation. We offer everything from presentation supplies to tips for better meetings. And we're the only transparency manufacturer that offers a recycling program for your used transparencies. For late-breaking news, handy reference and free product samples, call us toll-free in the continental United States and Canada, 24 hours a day, or visit our Internet Website.

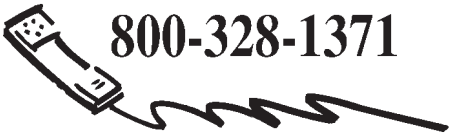

http://www.3m.com/meetings
e-mail: meetings@mmm.com

3M Austin Center
Building A145-5N-01
6801 River Place Blvd.
Austin, TX 78726-9000

3M Canada
P.O. Box 5757
London, Ontario
N6A 4T1

3M Mexico, S.A. de C.V.
Apartado Postal 14-139
Mexico, D.F. 07000
Mexico

3M Europe
Boulevard de l'Oise
95006 Cerge Pontoise Cedex
France

Litho in USA
Copyright © 2000 3M IPC.
All Rights Reserved
78-6970-9009-6 Rev. A